digital

RX11

Engineering Drawings

Digital Equipment Corporation

The material herein is for information purposes only and is subject to change without notice. Digital Equipment Corporation assumes no responsibility for any errors which may appear herein.

These drawings and specifications herein are the property of Digital Equipment Corporation and shall not be reproduced or copied or used in whole or in part as the basis for the manufacture or sale of items without written permission.
Copyright © 1975, Digital Equipment Corporation

digital EQUIPMENT CORPORATION MAYNARD MASSACHUSETTS

DRAWING DIRECTORY

"THIS DRAWING AND SPECIFICATIONS, HEREIN, ARE THE PROPERTY OF DIGITAL EQUIPMENT CORPORATION AND SHALL NOT BE REPRODUCED OR COPIED OR USED IN WHOLE OR IN PART AS THE BASIS FOR THE MANUFACTURE OR SALE OF ITEMS WITHOUT WRITTEN PERMISSION. COPYRIGHT © 1975 , DIGITAL EQUIPMENT CORPORATION"

CUSTOMER PRINT SET INDEX

THIS IS PRINT SET

SEQUENCE	SEQUENCE
RX11 DRAWING DIRECTORY	B-DD-RX11-Ø
SHIPPING LIST	A-PL-RX11-Ø-1
RX11 FLOPPY DISK SYSTEM	D-UA-RX11-Ø-Ø
UNIBUS INTERFACE	D-CS-M7846-Ø-1

UNIT VARIATIONS

VAR	TITLE	PRINT SET 1			
RX11-AA	RXØ1-AA & RX11 INTERFACE	X			
RX11-AC	RXØ1-AC & RX11 INTERFACE	X			
RX11-AD	RXØ1-AD & RX11 INTERFACE	X			
RX11-BA	RXØ1-BA & RX11 INTERFACE	X			
RX11-BC	RXØ1-BC & RX11 INTERFACE	X			
RX11-BD	RXØ1-BD & RX11 INTERFACE	X			
RX11-Ø	RX11 INTERFACE (M7846)	X			

REVISIONS		
DATE	CHG. NO.	REV
6-76	RX11-1	A

USED ON OPTION/MODEL

DRN. J.Fleming	DATE 2/18/75	TITLE RX11 FLOPPY DISK SYSTEM
CHK'D. McCarthy	DATE 5/29/75	
PROJ ENG.	DATE 6/13/75	
PROD.	DATE 6/13/75	SIZE B · CODE DD · NUMBER RX11-Ø · REV A
FIELD SERV.	DATE 6/13/75	DIST

SHEET 1 OF 3

DEC 16-12251-10SS-1A-8092

N/R

DPB 106

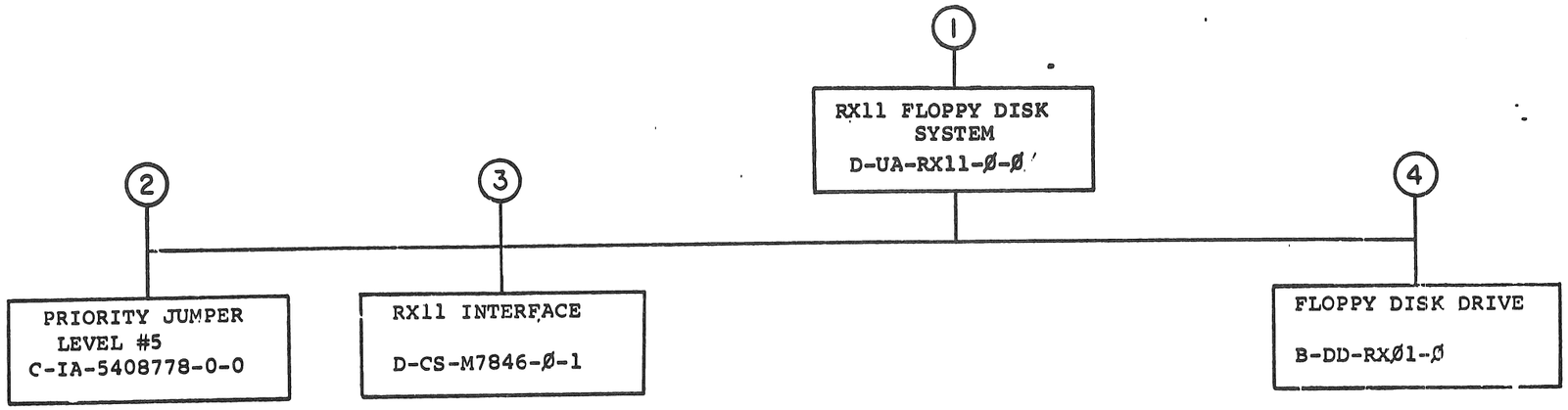

TITLE		SIZE	CODE	NUMBER	REV
RX11 FLOPPY DISK SYSTEM	SHEET 2 OF 3	B	DD	RX11-Ø	A

DRB 107
DEC 16-(325)-1062-3-N871

ELECTRICAL

CUSTOMER PRINT SET 1	MFG. SET	FEED NO.	DRAWING NO.	REV	NO OF SHT	DESCRIPTION	OPTION NO./FILE DATE
X		1	B-DD-RX11-Ø	*	3	DRAWING DIRECTORY	
X			A-PL-RX11-Ø-1	*	1	SHIPPING LIST	
			A-SP-RX11-Ø-2			TEST PROCEDURE	
			A-SP-RX11-Ø-3			ACCEPTANCE PROCEDURE	
			A-SP-RX11-Ø-4		13	RX11 ENGINEERING SPECIFICATION	
		2	C-IA-5408778-0-0		1	PRIORITY JUMPER LEVEL #5	
			B-CS-5408778-0-1	#	1	PRIORITY JUMPER LEVEL #5	
X		3	D-CS-M7846-Ø-1	#	3	UNIBUS INTERFACE	
			A-SP-M7846-Ø-7		3	ACCEPTANCE TEST PROCEDURE	

MECHANICAL

CUSTOMER PRINT SET 1	MFG SET	FEED NO.	DRAWING NO.	REV	NO OF SHT	DESCRIPTION	OPTION NO./FILE DATE
X		1	D-UA-RX11-Ø-Ø	#	1	RX11 FLOPPY DISK SYSTEM	
			A-PI -3700185-0-0		2	PACKAGING INSTRUCTION	
			A-PI-3700193-0-0			PACKAGING INSTRUCTIONS	
		4	B-DD-RXØ1-Ø	#	3	FLOPPY DISK DRIVE	

CUSTOMER PRINT SET CODES
X = PRINT OF DOCUMENT INCLUDED IN PRINT SET
C = INCLUDES ALL PRINTS INDICATED ON DOCUMENT
S = CONFIDENTIAL AUTHORIZED SIGNATURE REQUIRED

TITLE		SIZE	CODE	NUMBER	REV
RX11 FLOPPY DISK SYSTEM	SHEET 3 OF 3	B	DD	RX11-Ø	A

DRB 108

DEC 16-(325)-1062-2B-R972

DIGITAL EQUIPMENT CORPORATION
MAYNARD, MASSACHUSETTS

PARTS LIST

MADE BY B. McCarthy	CHECKED McCarthy	SECTION 1	
DATE 5/12/75	DATE 5/29/75		
ENG	PROD	ISSUED SECT. 1	
DATE	DATE 6/13/75		

ITEM NO.	DWG NO./PART NO.	DESCRIPTION	RX11-AA	RX11-AC	RX11-AD	RX11-BA	RX11-BC	RX11-BD	RX11-Ø
1	E-UA-RXØ1-AA-Ø	SINGLE FLOPPY DISK SYSTEM, 115V, 6ØHZ	1	-	-	-	-	-	-
2	E-UA-RXØ1-AC-Ø	SINGLE FLOPPY DISK SYSTEM, LOW VOLT, 5ØHZ	-	1	-	-	-	-	-
3	E-UA-RXØ1-AD-Ø	SINGLE FLOPPY DISK SYSTEM, HIGH VOLT, 5ØHZ	-	-	1	-	-	-	-
4	E-UA-RXØ1-BA-Ø	DUAL FLOPPY DISK SYSTEM, 115V, 6ØHZ	-	-	-	1	-	-	-
5	E-UA-RXØ1-BC-Ø	DUAL FLOPPY DISK SYSTEM, LOW VOLT, 5ØHZ	-	-	-	-	1	-	-
6	E-UA-RXØ1-BD-Ø	DUAL FLOPPY DISK SYSTEM, HIGH VOLT, 5ØHZ	-	-	-	-	-	1	-
7	D-CS-M7846-Ø-1	UNIBUS INTERFACE	1	1	1	1	1	1	1
8	C-IA-5408778-0-0	PRIORITY JUMPER LEVEL #5	1	1	1	1	1	1	-
9	EM-ØØØØ2	DRAWING DIRECTORY, RXØ1	1	1	1	1	1	1	-
10	EM-ØØØØ4	DRAWING DIRECTORY, RX11	1	1	1	1	1	1	-
11	EK-RXØ1-MM	RX8/RX11 MAINTAINENCE MANUAL	1	1	1	1	1	1	-
12	3612408-00	DISKETTE	1	1	1	2	2	2	-
13	A-PI-3700185-0-0	PACKAGING INSTRUCTIONS	1	1	1	1	1	1	1
14	ZJ189RB	RX11 DIAGNOSTIC KIT	1	1	1	1	1	1	-
15	A-PI-3700193-0-0	CUSTOMER PACKAGING INSTRUCTIONS	1	1	1	1	1	1	1

TITLE	ASSY NO.	SIZE	CODE	NUMBER	REV.	ECO NO.
SHIPPING LIST, RX11	—	A	PL	RX11-Ø-1		
	SHEET 1 OF 1	DIST.				

DEC FORM DEC 16 (325) 1031 N870
DRA 110

"THIS DRAWING AND SPECIFICATIONS, HEREIN, ARE THE PROPERTY OF DIGITAL EQUIPMENT CORPORATION AND SHALL NOT BE REPRODUCED OR COPIED OR USED IN WHOLE OR IN PART AS THE BASIS FOR THE MANUFACTURE OR SALE OF ITEMS WITHOUT WRITTEN PERMISSION.
COPYRIGHT © 1976, DIGITAL EQUIPMENT CORPORATION"

LEGEND	
NUMBER	VARIATION
RX11 - AA	RXØ1-AA & RX11 INTERFACE, 115 V, 6ØHZ
RX11-AC	RXØ1-AC & RX11 INTERFACE, LOW V, 5ØHZ
RX11-AD	RXØ1-AD & RX11 INTERFACE, HIGH V, 5Ø HZ
RX11-BA	RXØ1-BA & RX11 INTERFACE, 115 V, 6ØHZ
RX11-BC	RXØ1-BC & RX11 INTERFACE, LOW V, 5ØHZ
RX11-BD	RXØ1-BD & RX11 INTERFACE, HIGH V, 5ØHZ
RX11-Ø	UNIBUS INTERFACE (M7846)

NOTES.

1. ITEMS INDICATED WITH ASTERISKS (*) ARE SHOWN FOR REFERENCE ONLY AND ARE NOT PART OF THIS UNIT.
2. MODULE M7726 & CABLE ASSY BCØ5L ARE SUPPLIED WITH RXØ1 FLOPPY DISK ASSY.
3. RED STRIPE ON BCØ5L CABLE INDICATES PIN A' ON THE CONNECTOR

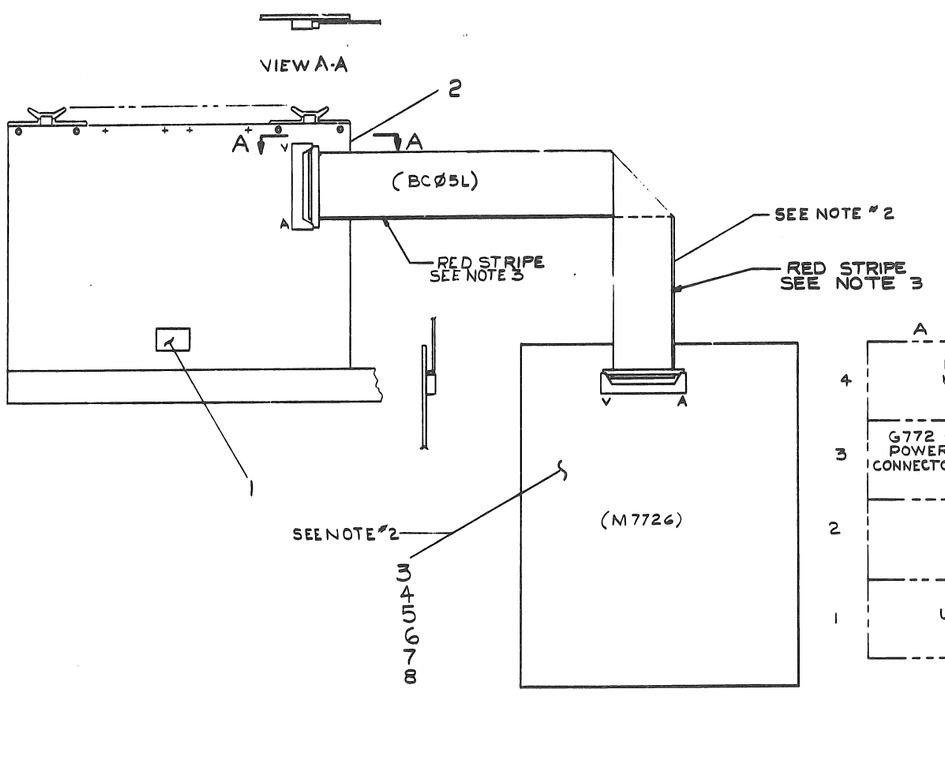

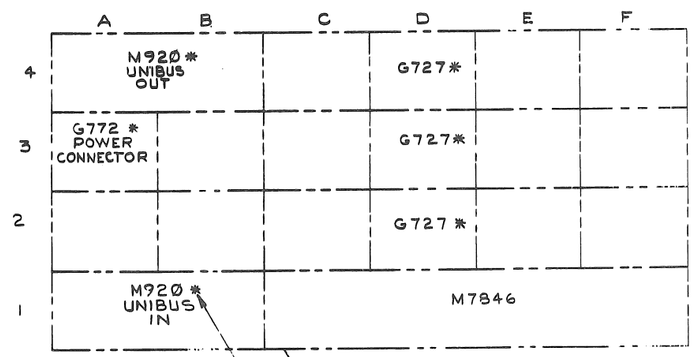

RX11-BD	RX11-BC	RX11-BA	RX11-AD	RX11-AC	RX11-AA	RX11-Ø	DESCRIPTION	DWG./PART NO.	ITEM NO.
—	—	—	—	—	—	—	CUST. PACKAGING INST.	A-PI-3700193-0-0	REF
—	—	—	—	—	—	—	IN-PLANT PACKAGING INST.	A-PI-3700185-0-0	REF
1	—	—	—	—	—	—	RXØ1-BD FLOPPY DISK DRIVE	E-UA-RXØ1-BD-Ø	8
—	1	—	—	—	—	—	RXØ1-BC FLOPPY DISK DRIVE	E-UA-RXØ1-BC-Ø	7
—	—	1	—	—	—	—	RXØ1-BA FLOPPY DISK DRIVE	E-UA-RX01-BA-0	6
—	—	—	1	—	—	—	RXØ1-AD FLOPPY DISK DRIVE	E-UA-RX01-AD-0	5
—	—	—	—	1	—	—	RXØ1-AC FLOPPY DISK DRIVE	E-UA-RX01-AC-0	4
—	—	—	—	—	1	—	RXØ1-AA FLOPPY DISK DRIVE	E-UA-RX01-AA-0	3
1	1	1	1	1	1	1	RX11 UNIBUS INTERFACE	D-CS-M7846-0-1	2
1	1	1	1	1	1	—	PRIORITY JUMPER LEV # 5	C-IA-5408778-00	1

QUANTITY & VARIATION

UNLESS OTHERWISE SPECIFIED DIMENSIONS ARE IN INCHES

ANGLES ±0° 30'	CLASS OF ACCURACY (CHECK ONE)	OVER 0 TO 0.2	OVER 0.2 TO 1.2	OVER 1.2 TO 4.0	OVER 4.0 TO 12.0	OVER 12.0 TO 40.0	OVER 40.0 TO 80.0
SURFACE QUALITY IN MICROINCHES		NOMINAL DIMENSION RANGE INCHES					
	MEDIUM ☐	±.004	±.008	±.012	±.016	±.024	±.04
	PREFERRED ☐	±.012	±.016	±.020	±.04	±.063	±0.1

THIRD ANGLE PROJECTION

REMOVE BURRS AND BREAK SHARP CORNERS

DO NOT SCALE DWG

MATERIAL —/—

FINISH —/—

DRN. [illegible] 6/5/78
CHK'D [illegible] 6/5/78
ENG. [illegible]
PROJ. ENG. [illegible] 6/5/78
PROD. [illegible] 6/13/78

NEXT HIGHER ASSY. B-DD-RX11-0

SCALE NONE

SHEET 1 OF 1

FIRST USED ON PDP11

TITLE RX11 FLOPPY DISK SYSTEM

SIZE	CODE	NUMBER	REV.
D	UA	RX11-Ø-Ø	

DIST.

DEC FORM NO. GRD 100-0

"THIS DRAWING AND SPECIFICATIONS, HEREIN, ARE THE PROPERTY OF DIGITAL EQUIPMENT CORPORATION AND SHALL NOT BE REPRODUCED OR COPIED OR USED IN WHOLE OR IN PART AS THE BASIS FOR THE MANUFACTURE OR SALE OF ITEMS WITHOUT WRITTEN PERMISSION. COPYRIGHT © 1974 DIGITAL EQUIPMENT CORPORATION"

NOTES:

1. UNLESS OTHERWISE SPECIFIED:
   A. ALL RESISITORS ARE 1/4 W, 1.5%.
   B. ALL UNUSED PINS FOR U1 ARE TIED TO GND EXCEPT FF.

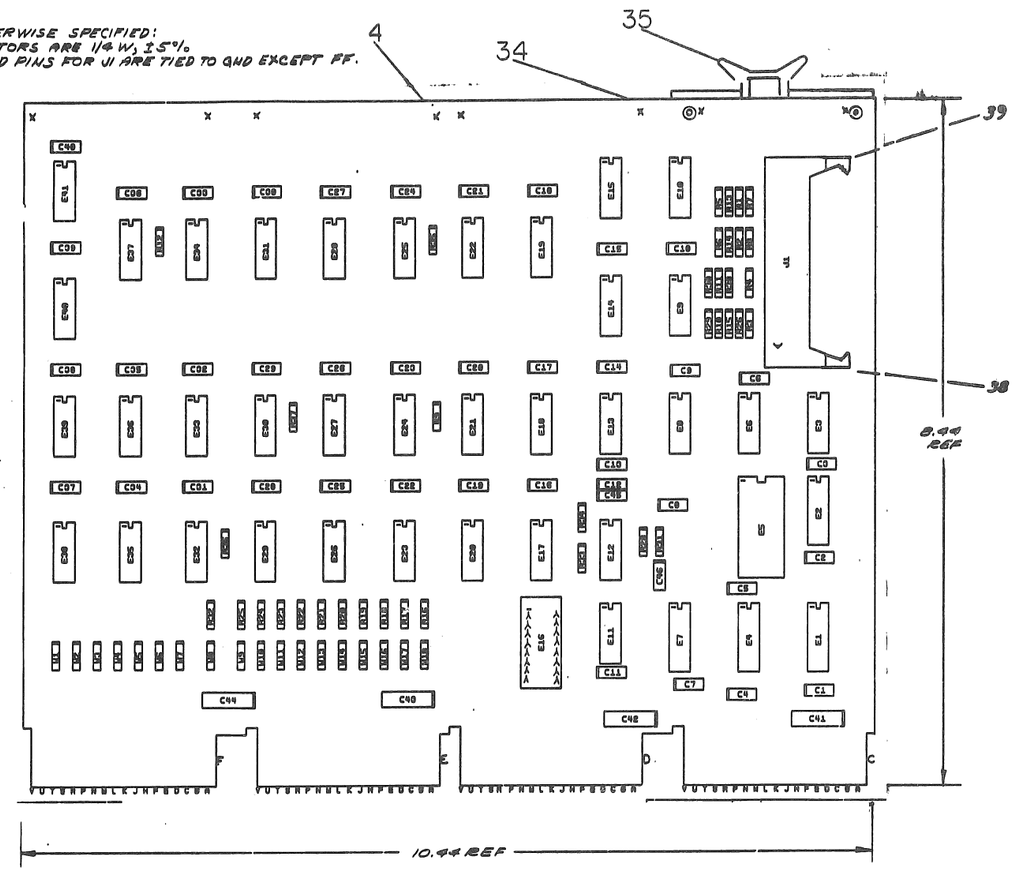

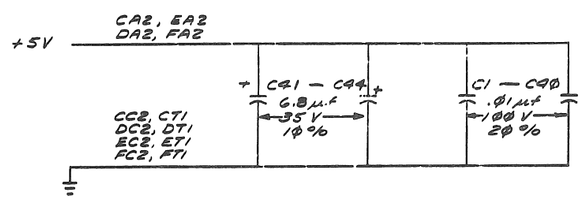

8640	1	8
74199	12	24
8838	8	16
74157	8	16
74H106	13	5
314	1	8
IC TYPE	GND	+5V

GND AND 5V ARE USUALLY PIN 7 AND 14 RESPECTIVELY EXCEPTIONS ARE STATED ABOVE

IC PIN LOCATIONS

QTY	REF. DESIGNATION	DESCRIPTION	PART NO.	ITEM NO.
REF		X-Y COORDINATE HOLE LOCATION	K-CO-M7846-0-4	1
REF		ASSY/DRILL HOLE LAYOUT	D-AH-M7846-0-5	2
REF		MODULE ECO HISTORY	B-MH-M7846-0-6	3
1		ETCHED CIRCUIT BOARD	5011375	4
1	C45	CAP 330 pf 100V 5%	1000023-00	5
1	C46	CAP 470 pf 100V 5%	1000024-00	6
40	C1 - C40	CAP .01 µF 100V 20% DISC	1001610-01	7
4	C41 - C44	CAP 6.8 µF 35V 10% S.TANT	1005306-00	8
1	E16	SOCKET, GLASS 16 PIN	1209838-00	9
1	J1	CONN, 40 PIN HEADER	1209941-02	10
1	R34	RES 47 1/4W 5%	1300202-00	11
8	R30, R24, R26, R28 R14, R30, R8, R11	RES 390 1/4W 5%	1300309-00	12
1	R31	RES 100 1/4W 5%	1300229-00	13
4	R37, R20, R33, R29	RES 1K 1/4W 5%	1300365-00	14
13	R16—R25, R12 R32, R35	RES 10K 1/4W 5%	1300479-00	15
9	R29, R36, R23 R5, R7, R13, R15, R1, R10	RES 180 1/2W 5%	1301322-00	16
2	E31, E37	IC 7474	1905547-00	17
3	E29, E36, E41	IC 7400	1905575-00	18
2	E6, E18	IC 7450	1905580-00	19
2	E34, E39	IC 7402	1909004-00	20
1	E3	IC 8281	1909490-00	21
1	E25	IC 74H74	1909667-00	22
3	E8, E21, E19	IC 7404	1909686-00	23
1	E20	IC 314	1909704-00	24
5	E12, E14, E32, E35, E38	IC 8881	1909705-00	25
3	E24, E27, E30	IC 8242	1909718-00	26
3	E13, E22, E40	IC 7408	1910155-00	27
1	E2	IC 74H106	1910408-00	28
1	E1	IC 74157	1910655-00	29
1	E5	IC 74199	1910892-00	30
1	E17	IC 7427	1910878-00	31
2	E4, E7	IC 8838	1911117-00	32
7	E11, E23, E26, E28, E15, E33, E9	IC 8640	1911469-00	33
8		EYELET	9006732-00	34
4		HANDLE - FLIP CHIP, MAGENTA	9008337-06	35
1	E10	IC (SPARE)		
18	W1 - W18	JUMPER, WIRE .4 LONG	9107560-1	37
1		LATCH, LEFT FOR RT ANG HEADER	1209941-03	38
1		LATCH, RIGHT FOR RT ANG HEADER	1209941-04	39
1	R26	RES 120Ω 1/4W 5%	1300247-00	40

PARTS LIST

FIRST USED ON OPTION MODEL: M7846

ETCH BOARD REV. C

DEC NO.	EIA NO.	DEC NO.	EIA NO.

SEMICONDUCTOR CONVERSION CHART

REV.	CHANGE NO.	DATE	BY
B	M7846-00001	6/24/75	C. YOUSE
C	M7846-00002	2-8-75	C. YOUSE
D	M7846-00003	3-1-76	C. YOUSE

REVISIONS

DRN. Tom Metcer DATE 10/5/74
CHKD. DATE 10/10/74
DSGN. ENG. DATE 11/6/75
PROD. DATE 11/6/75
NEXT HIGHER ASSY —
SCALE —
SHEET 1 OF 3

digital

TITLE RXII UNIBUS INTERFACE

SIZE D CODE CS NUMBER M7846-0-1 REV. D

DIST.

DEC FORM NO. DSD 120.0

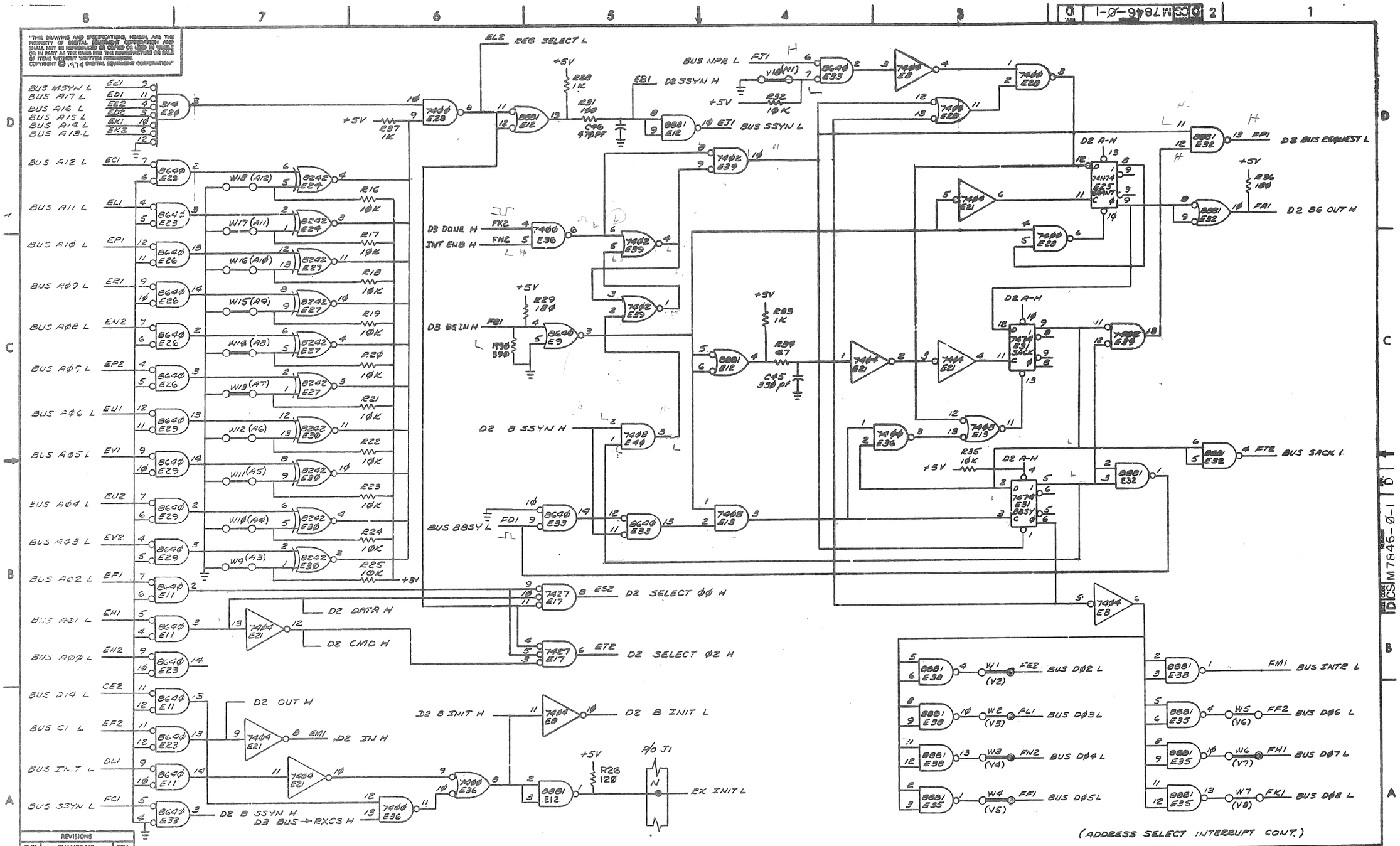

"THIS DRAWING AND SPECIFICATIONS, HEREIN, ARE THE PROPERTY OF DIGITAL EQUIPMENT CORPORATION AND SHALL NOT BE REPRODUCED OR COPIED OR USED IN WHOLE OR IN PART AS THE BASIS FOR THE MANUFACTURE OR SALE OF ITEMS WITHOUT WRITTEN PERMISSION. COPYRIGHT © 1974 DIGITAL EQUIPMENT CORPORATION"

REVISIONS		
CHK	CHANGE NO.	REV.

TITLE	SIZE	CODE	NUMBER	REV.
RX11 UNIBUS INTERFACE (D2)	D	CS	M7846-Ø-1	D
SCALE —	SHEET 2 OF 3	DIST.		

"THIS DRAWING AND SPECIFICATIONS, HEREIN, ARE THE PROPERTY OF DIGITAL EQUIPMENT CORPORATION AND SHALL NOT BE REPRODUCED OR COPIED OR USED IN WHOLE OR IN PART AS THE BASIS FOR THE MANUFACTURE OR SALE OF ITEMS WITHOUT WRITTEN PERMISSION. COPYRIGHT © 1974 DIGITAL EQUIPMENT CORPORATION"

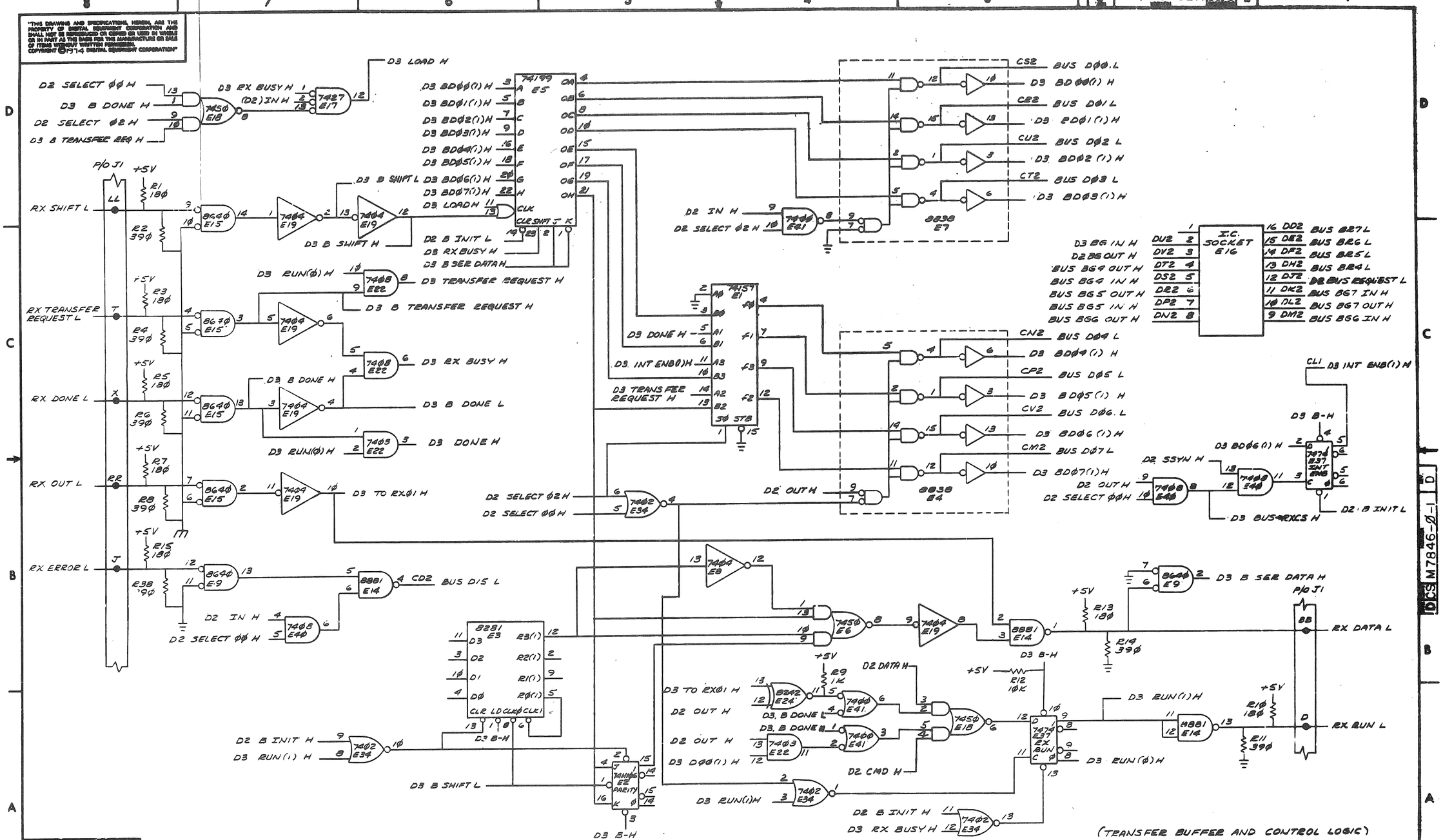

REVISIONS		
CHK	CHANGE NO.	REV.

TITLE RX11 UNIBUS INTERFACE (D3)

SIZE D CODE CS NUMBER M7846-Ø-1 REV. D

SCALE — SHEET 3 OF 3 DIST.

DEC FORM NO. DRD 138

D CS M7846-Ø-1 D

450 – 5000