204

digital

RK11-D

Engineering Drawings

Digital Equipment Corporation

digital EQUIPMENT CORPORATION MAYNARD MASSACHUSETTS

DRAWING DIRECTORY

CUSTOMER PRINT SET INDEX

THIS IS PRINT SET

SEQUENCE	
MODULE UTILIZATION	D-MU-RK11-D-1
PARTS LIST	A-PL-RK11-D-1
STATUS CONTROL	D-CS-M7254-0-1
DISK CONTROL	D-CS-M7255-0-1
DATA PATHS	D-CS-M7256-0-1
BUS CONTROL	D-CS-M7257-0-1
BACK PANEL INTERCONNECTION	D-IC-RK11-D-3
RK11-D FUNCTION FLOWS	D-FD-RK11-D-9
ETCH BACK PANEL	D-CS-5410185-0-1
UNIT ASSEMBLE	D-UA-RK11-0-0
WIRED ASSEMBLY	C-IA-7009142-0-0
BUS TERMINATOR	A-PL-M930-0-0
OPTION HARNESS	D-IA-7009559-0-0 (SEE NOTE)
RKØ5 OPTION CONFIGURATION	D-OC-RKØ5-0-15
MAINTENANCE MODULE	A-SS-5509081-0-11
ACCESSORY LIST	A-AL-RK11-D-6
SOFTWARE LIST	A-SL-RK11-D-7
ETCH/WIRE LIST	K-WL-RK11-D-2
AWT REVISION STATUS	A-WT-7009142-0

NOTE: USE RK11-D OPTION HARNESS 7009559 IN 11/40 SYSTEMS WITH S/N GREATER THAN 6000 AND 11/45 SYSTEMS WITH S/N GREATER THAN 2000. OLDER MACHINES REQUIRE RK11-D POWER HARNESS 7008992.

PDP11/15 AND PDP11/20 SYSTEM AND BA11-ES BOXES USE NO POWER HARNESS OTHER THAN THAT SUPPLIED INTERNAL TO THE BOX. BA11-D BOXES REQUIRE RK11-D POWER HARNESS 7008992.

UNIT VARIATIONS

VAR	TITLE	PRINT SET 1	2	3
RK11-D	DISK CONTROL	X		
RK11-E	DISK CONTROL	X		
RK11-DE	RK11-D, RKØ5-DE (TALL CAB, 861 115V, 60HZ)	X		
RK11-DF	RK11-D, RKØ5-DF (TALL CAB, 861, 23ØV, 60HZ)	X		
RK11-DH	RK11-D, RKØ5-DH (TALL CAB, 861, 115V, 50 HZ)	X		
RK11-DJ	RK11-D, KKØ5-DJ (TALL CAB, 861, 23ØV, 50 HZ)	X		
RK11J-DE	RK11-D RKØ5J DE	X		
RK11J DF	RK11-D RKØ5J DF	X		
RK11J-DH	RK11-D. RKØ5J-DH	X		
RK11J-DJ	RK11-D RKØ5J-DJ	X		
RK11J DK	RK11-D RKØ5J-DK	X		
RK11J DL	RK11-D RKØ5J-DL	X		
RK11J DM	RK11-D RKØ5J-DM	X		
RK11J DN	RK11-D RKØ5J-DN	X		

REVISIONS		
DATE	CHG. NO.	REV
3-74	RK11D-14	K
4-74	RK11D-15	L
5-74	RK11D-16	M
7-75	RK11D-17	N
10-75	RK11D-18	P
10-76	RK11D-19	R

USED ON OPTION/MODEL

SHEET 1 OF 4

DRN. E. WILSON	DATE 12-72	TITLE DISK CONTROL
CHK'D. GILBERT	DATE 12-72	
PROJ ENG. T. ORR	DATE 12-72	
PROD. R. DOOLEY	DATE 12-72	SIZE B / CODE DD / NUMBER RK11-D / REV R
FIELD SERV. R. FULTON	DATE 12-72	DIST

DEC 16-(325)-1062-1A-R972

DRB 106

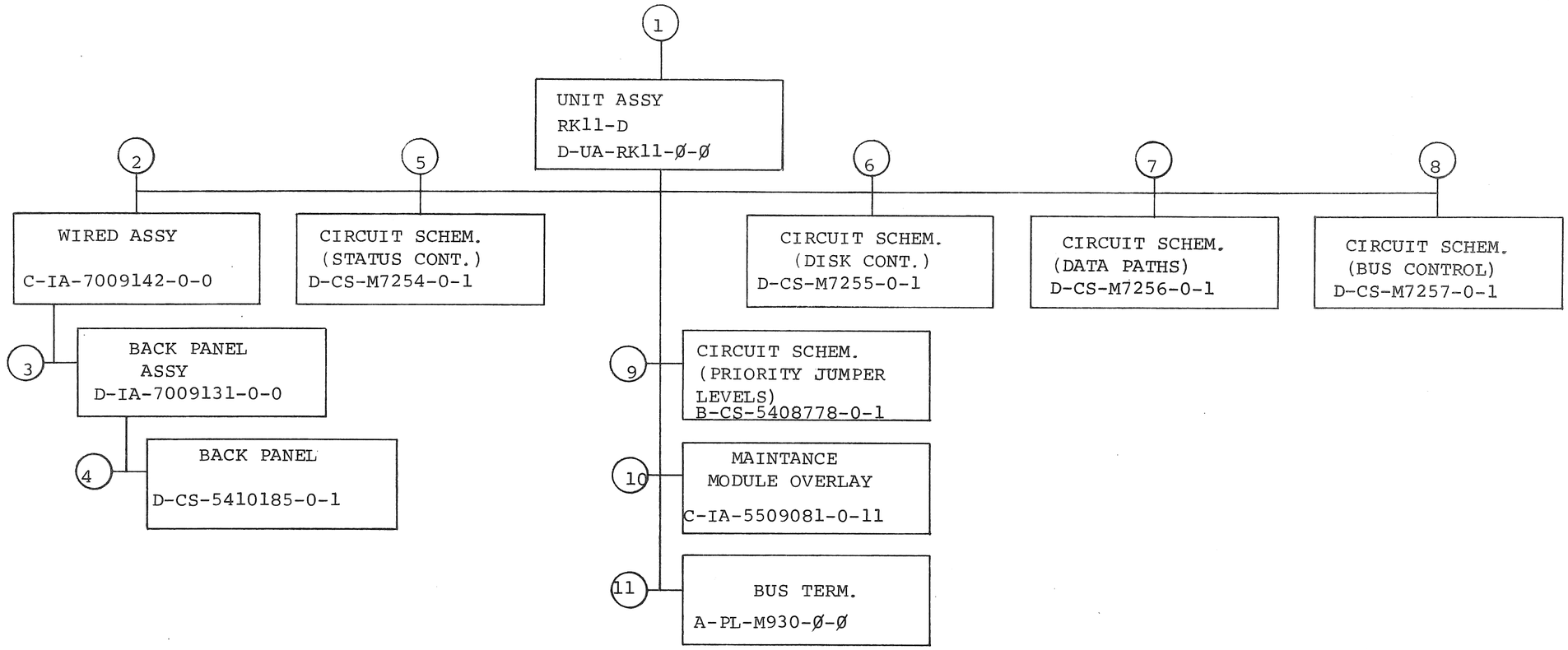

TITLE		SIZE	CODE	NUMBER	REV
DISK CONTROL	SHEET 2 OF 4	B	DD	RKII-D	R

DRB 107
DEC 16—(325)—1062—3—N871

CUSTOMER PRINT SET 1				MFG. SET	ELECTRICAL FIND NO.	DRAWING NO.	REV	NO OF SHT	DESCRIPTION	OPTION NO./FILE DATE
X					1	D-UA-RK11-0-Ø	C	1	UNIT ASSY (RK11-D)	
X						D-MU-RK11-D-1	*	1	MODULE UTILIZATION (RK11-D)	
X						A-PL-RK11-D-1	*	1	MODULE UTILIZATION (RK11-D) PL	
						D-IA-7008992-0-0		1	POWER HARNESS (REF)	
X						D-IC-RK11-D-3	C	4	BACK PANEL INTERCONNECTION	
X						D-IA-7009559-0-0	#	1	OPTION HARNESS	
X					2	C-IA-7009142-0-0	B	1	WIRED ASSY (RK11-D)	
					3	D-IA-7009131-0-0		1	BACK PANEL	
X					4	D-CS-5410185-0-1	#	1	CIRCUIT SCHEMATIC (BACKPANEL)	
						K-CO-5410185-0-4		1	X-Y COORDINATE HOLE LOCATION	
						E-AH-5410185-0-5		1	ASSY DRILLING HOLE LOCATION	
						B-MH-5410185-0-6		1	MODULE ECO HISTORY	
C						K-WL-RK11-D-2	H	1	ETCH/WIRE LIST (RK11-D)	
X						A-WT-7009142-0	H	1	AWT REVISION STATUS	
X					5	D-CS-M7254-0-1	#	6	CIRCUIT SCHEMATIC (STATUS CONT)	
						K-CO-M7254-0-4		1	X-Y COORDINATE HOLE LOCATION	
						D-AH-M7254-0-5		1	ASSY DRILLING HOLE LOCATION	
						B-MH-M7254-0-6		1	MODULE ECO HISTORY	
X					6	D-CS-M7255-0-1	#	7	CIRCUIT SCHEMATIC (DISK CONT.)	
						K-CO-M7255-0-4		1	X-Y COORDINATE HOLE LOCATION	
						D-AH-M7255-0-5		1	ASSY DRILLING HOLE LOCATION	
						B-MH-M7255-0-6		1	MODULE ECO HISTORY	
X					7	D-CS-M7256-0-1	#	7	CIRCUIT SCHEMATIC (DATA PATHS)	
						K-CO-M7256-0-4		1	X-Y COORDINATE HOLE LOCATION	
						D-AH-M7256-0-5		1	ASSY DRILLING HOLE LOCATION	
						B-MH-M7256-0-6		1	MODULE ECO HISTORY	

CUSTOMER PRINT SET 1				MFG SET	ELECTRICAL FIND NO.	DRAWING NO.	REV	NO OF SHT	DESCRIPTION	OPTION NO./FILE DATE
X					8	[illegible]-CS-M7257-0-1	#	6	CIRCUIT SCHEMATIC (BUS CONT.)	
						[illegible]-CO-M7257-0-4		1	X-Y COORDINATE HOLE LOCATION	
						D-AH-M7257-0-5		1	ASSY DRILLING HOLE LOCATION	
						B-MH-M7257-0-6		1	MODULE ECO HISTORY	
					9	B-CS-5408778-0-1		1	CIRCUIT SCHEMATIC (PRIORITY JUMPER LEVELS)	
						C-IA-5408778-0-0		1	PRIORITY JUMPER LEVEL #5	
						D-IA-5008777-0-0		1	ETCH BOARD	
X					10	A-SS-5509081-0-11	#		MAINTENCE MODULE OVERLAY (RK11D)	
						C-IA-5509081-0-0			MAINTENCE MODULE OVERLAY	
X						D-OC-RKØ5-Ø-15	#		RKØ5 OPTION CONFIGURATION (REF)	
X					11	A-PL-M930-0-Ø	#		BUS TERMINATOR	
					12	A-SP-RK11-D-4	A	18	RK11-D ENGINEERING SPECS	
						A-SP-RK11-D-5	A	5	RK11-D CHECK OUT PROCEDURE	
X						A-AL-RK11-D-6	*	1	RK11-D ACCESSORY LIST	
X						A-PL-RK11-D-7	A	1	RK11-D SOFTWARE LIST	
						A-SP-RK11-D-8	A	4	RK11-D ACCEPTANCE PROCEDURE	
X						D-FD-RK11-D-9	*	5	RK11-D,E FUNCTION FLOWS	
						B-DD-RK11-TA			RK11-D,E TESTER	
						A-SP-RK11-Ø-2		23	DISK SYSTEM MANUFACTURING PROCEDURES (REF)	

CUSTOMER PRINT SET CODES
X = PRINT OF DOCUMENT INCLUDED IN PRINT SET
C = INCLUDES ALL PRINTS INDICATED ON DOCUMENT
S = CONFIDENTIAL AUTHORIZED SIGNATURE REQUIRED

= PRINT OF DOCUMENT IS LATEST REVISION LEVEL

TITLE	SHEET	SIZE	CODE	NUMBER	REV
[illegible] CONTROL	3 OF 4	B	DD	RK11-D	R[illegible]

DRB 108
DEC 16-(325)-1062-2B-R972

CUSTOMER PRINT SET 1	MFG. SET	FIND NO.	DRAWING NO.	REV	NO OF SHT	DESCRIPTION	OPTION NO./FILE DATE
		1	D-UA-RK11-0-Ø	C	1	UNIT ASSY (RK11-D)	
		2	C-IA-7009142-0-0	B	1	WIRED ASSY (RK11-D)	
		3	D-IA-7009131-0-0	#	1	BACKPANEL	
			E-SC-1209583-0-1		1	CASTING, THREE BLOCK	
			A-SS-7407846-0-0		1	DECAL LOGIC SERIAL NUMBER	
		4	D-CS-5410185-0-1	#	1	CIRCUIT SCHEMATIC (BACKPANEL)	
			K-CO-5410185-0-4		1	X-Y COORDINATE HOLE LOCATION	
			E-AH-5410185-0-5		1	ASSY DRILLING HOLE LOCATION	
			B-MH-5410185-0-6		1	MODULE ECO HISTORY	
		5	D-CS-M7254-0-1	#	5	CIRCUIT SCHEMATIC (STATUS CONT.)	
			K-CO-M7254-0-4		1	X-Y COORDINATE HOLE LOCATION	
			D-AH-M7254-0-5		1	ASSY DRILLING HOLE LOCATION	
			B-MH-M7254-0-6		1	MODULE ECO HISTORY	
		6	D-CS-M7255-0-1	#	6	CIRCUIT SCHEMATIC (DISK CONT.)	
			K-CO-M7255-0-4		1	X-Y COORDINATE HOLE LOCATION	
			D-AH-M7255-0-5		1	ASSY DRILLING HOLE LOCATION	
			B-MH-M7255-0-6		1	MODULE ECO HISTORY	
		7	D-CS-M7256-0-1	#	6	CIRCUIT SCHEMATIC (DATA PATHS)	
			K-CO-M7256-0-4		1	X-Y COORDINATE HOLE LOCATION	
			D-AH-M7256-0-5		1	ASSY DRILLING HOLE LOCATION	
			B-MH-M7256-0-6		1	MODULE ECO HISTORY	
		8	D-CS-M7257-0-1	#	5	CIRCUIT SCHEMATIC (BUS CONTROL)	
			K-CO-M7257-0-4		1	X-Y COORDINATE HOLE LOCATION	
			D-AH-M7257-0-5		1	ASSY DRILLING HOLE LOCATION	
			B-MH-M7257-0-6		1	MODULE ECO HISTORY	

CUSTOMER PRINT SET CODES
X = PRINT OF DOCUMENT INCLUDED IN PRINT SET
C = INCLUDES ALL PRINTS INDICATED ON DOCUMENT
S = CONFIDENTIAL AUTHORIZED SIGNATURE REQUIRED

= PRINT OF DOCUMENT IS LATEST REVISION LEVEL

TITLE	SHEET	SIZE	CODE	NUMBER	REV
BUS CONTROL	4 OF 4	B	DD	RK11-D	R

DPB 108
DEC 16-(325)-1062-2B-R972

NOTE:
FOR PROPER OPERATION OF RK11-D, E THE RK05 DRIVE MUST HAVE AN M7700 REV. J OR LATER AND HAVE A BACKPANEL OF REV. A OR LATER. FOR RK11-E THE RK05 MUST ALSO HAVE A G180 REV. K OR LATER.

	A	B	C	D	E	F
4	UNIBUS OUT M930 TERMINATOR OR M920 INTERNAL CONNECTOR OR BC11-A CABLE		M7257 BUS CONTROL			
3	G772 POWER CONN.	W130 KM11A MAINTENANCE BOARD (OPTIONAL)	M7256 DATA PATHS			
2	BC11-A DISK CABLE		M7255 DISK CONTROL			
1	UNIBUS IN M920 INTERNAL CONNECTOR OR BC11-A CABLE		M7254 STATUS CONTROL			

REVISIONS	CHANGE NO.	CHK

FIRST USED ON OPTION/MODEL: RK11-D

DO NOT SCALE DRAWING
UNLESS OTHERWISE SPECIFIED
DIMENSION IN INCHES
TOLERANCES
DECIMALS ± .005 FRACTIONS ± 1/64 ANGLES ± 0°30'
FINAL SURFACE QUALITY
REMOVE BURRS AND BREAK SHARP CORNERS

MATERIAL

FINISH

DRN.	E. Nelson	DATE 7/26/72
CHK'D.		DATE 1/20/72
ENG.		DATE 1/11/72
PROJ. ENG.		DATE 1/11/72
PROD.	D. Lorin	DATE 1/20/73
NEXT HIGHER ASSY		
SCALE	NONE	
SHEET	1 OF 1	

QTY.	DESCRIPTION	PART NO.	ITEM NO.
	PARTS LIST		

digital EQUIPMENT CORPORATION
MAYNARD, MASSACHUSETTS

TITLE: MODULE UTILIZATION

SIZE	CODE	NUMBER	REV.
D	MU	RK11-D-1	

DIST.

DTC FORM NO
DND 100

DIGITAL EQUIPMENT CORPORATION
MAYNARD, MASSACHUSETTS

PARTS LIST

MADE BY LEWIS	CHECKED	SECTION
DATE 9-26-72	DATE 12/8/72	
ENG	PROD R. Dooley	ISSUED SECT.
DATE	DATE 12/13/72	

ITEM NO.	DWG NO./PART NO.	DESCRIPTION	QUANTITY/VARIATION
1	M7254	STATUS CONTROL	1
2	M7255	DISK CONTROL	1
3	M7256	DATA PATHS	1
4	M7257	BUS CONTROL	1

TITLE	ASSY NO.	SIZE	CODE	NUMBER	REV.	ECO NO.
MODULE UTILIZATION (RK11-D)	D-MU-RK11-D-1	A	PL	RK11-D-1		
	SHEET 1 OF 1	DIST.				

DEC FORM DEC 16-(325)-1031 N870
DRA 110

PAGE REVISION CONTROL SHEET

SH NO.	PAGE REVISIONS									REMARKS
1	B	C	D	E	D1	F	D2	H	J	
2	B	C	D	E	D1	F	D1	F	H	
3	B	B	B	C	B1	C	B1	C	C	(ST 1)
4	B	C	D	E	D1	F	D1	F	F	(ST 2)
5	B	B	C	D	C1	D	C2	E	F	(ST 3)
6	B	C	D	F	D1	E	D1	E	F	(ST 4)

ETCH REV, "D" NOT TO BE USED.

ECO NO.		00001	00002	00003	00004	00004	00005	00005	00006
ETCH REV.	C	C	C	E	C	E	C	E	E
ENG.									
DATE		12-11-72	2-16-73	6-5-73	10-10-73	10-10-73	5-30-74	5-30-74	7-18-74

FIRST USED ON OPTION/MODEL

RK11-D

DRN.		DATE	
CHK'D.		DATE	
ENG.		DATE	
PROJ. ENG.		DATE	
PROD.		DATE	

digital EQUIPMENT CORPORATION
MAYNARD MASSACHUSETTS

TITLE

STATUS CONTROL

(RK11-D)

NEXT HIGHER ASSY.: B-DD-RK11-D

SCALE: —

SHEET 1 OF 6

SIZE	CODE	NUMBER	REV.
B	CS	M7254-0-1	J

DIST.

NOTES:

✱ IF NECESSARY USE I.C DEC 8875 P/N 1910647

✱✱ IC DEC 384 P/N 1909486 OR 5384 P/N 1910394 MAY BE SUBSTITUTED FOR 7384 IN E26. E1 MUST BE A 7384

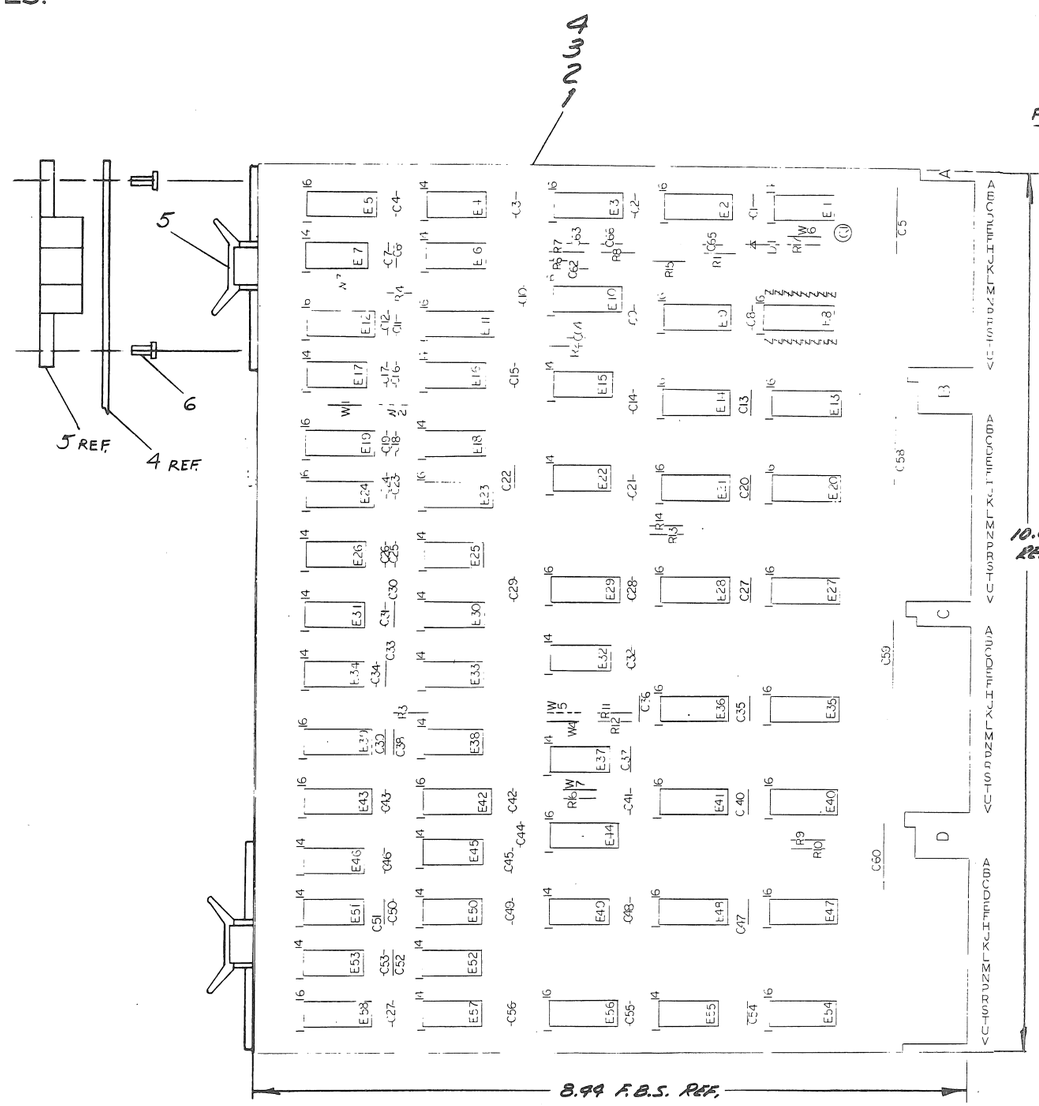

PIN NOMENCLATURE

MODULE	RK11-D
A	C
B	D
C	E
D	F

QTY	REF DESIGNATION	DESCRIPTION	PART NO.	ITEM NO.
1	Q1	TRANSISTOR DEC 6534B	1503409-01	50
1	E8	IC SOCKET	1209838	49
4	W1,W4,W6,W7	INSULATED JUMPER C-2007-1	9009185	48
1	E39	I.C. DEC 7475	1909050	47
2	E23, E41	I.C. DEC 74175	1910651	46
1	E55	I.C. DEC 8815	1909713	45
1	E4	I.C. DEC 74H55	1909063	44
2	E17 E52	I.C. DEC 74H53	1909062	43
1	E38	I.C. DEC 7408	1910135	42
1	E45	I.C. DEC 74H11	1909267	41
5	E21,E27,E28,E29,E40	I.C. DEC 74123	1910018	40
4	E12,E19,E24,E56	I.C. DEC 74161	1910630	39
1	E57	I.C. DEC 74H74	1909667	38
3	E6 E7, E37	I.C. DEC 7474	1905597	37
1	E53	I.C. DEC 74H52	1909061	35
2	E15, E22	I.C. DEC 7437	1910091	34
✱✱ 2	E1, E26	I.C. DEC 7384	1910393	33
1	E30	I.C. DEC 8881	1909705	32
3	E2, E3, E10	I.C. DEC 74123	1910436	31
3	E9, E42, E44	I.C. DEC 4015	1910087	30
2	E31, E32	I.C. DEC 7420	1905577	29
1	E16	I.C. DEC 7410	1905576	28
3	E18, E34, E49	I.C. DEC 7400	1905575	27
2	E46, E50	I.C. DEC 7402	1909064	26
8	E13,E14,E20,E35,E36,E47,E48,E54	I.C. DEC 74153	1909937	25
1	E11	I.C. DEC 7496	1910363	24
✱ 1	E25	I.C. DEC 7427	1910878	23
2	E51, E33	I.C. DEC 7404	1909686	22
1	E43	I.C. DEC 7442	1910046	21
3	R10, R12, R14	RES. 750 Ω 1/4 W 5%	1301401	20
3	R9, R11, R13	RES. 330 Ω 1/4 W 5%	1300295	19
3	R3, R15, R16	RES. 1K 1/4 W 5%	1300365	18
1	R1	RES. 47K 1/4 W 5%	1302177	17
1	R4	RES. 3K 1/4 W 5%	1300432	16
4	R2, R6, R7, R8	RES. 10K 1/4 W 5%	1300479	15
1	R17	RES. 470 Ω 1/4 W 5%	1300316	14
1	D1	DIODE IN748A 3.9V	1100122	13
2	C62, C63	CAP. 47pf 100V 5% D.M	1000011	12
1	C65	CAP. 330 pf 100V 5% D.M	1001631	11
1	C64	CAP. 56 pf 100V 5% D.M	1000012	10
1	C66	CAP. 120 pf 100V 5% D.M.	1000018	9
56	C1-C4, C6-C57	CAP. .01 µf 100V 20% AXIAL	1001610	8
4	C5, C58, C59, C60	CAP. 6.8 µf 35V, 10% TANT	1005306	7
8		EYELET (GS-4-7) STIMPSON	9006732	6
4		HANDLE (FLIP-CHIP) MAGENTA	9008337-06	5
1		ETCHED CIRCUIT BOARD	5009825	4
REF		MODULE ECO HISTORY	D-MH-M7254-0-6	3
REF		ASSY/DRILLING HOLE LAYOUT	D-MH-M7254-0-5	2
REF		X-Y COORDINATE HOLE LOCATION	K-CG-M7254-0-4	1

PARTS LIST

I.C. DEC 74175	8 / 16
I.C. DEC 74161	8 / 16
I.C. DEC 7384	1 / 8
I.C. DEC 4015	8 / 16
I.C. DEC 7496	12 / 5
I.C DEC 74193	8 / 16
I.C. DEC 74153	8 / 16
I.C. DEC 74123	8 / 16
I.C. DEC 7475	12 / 5
I.C. DEC 7442	8 / 16
IC TYPE	GND / + 5V

GND AND 5V ARE USUALLY PIN 7 AND 14 RESPECTIVELY EXCEPTIONS ARE STATED ABOVE

IC PIN LOCATIONS

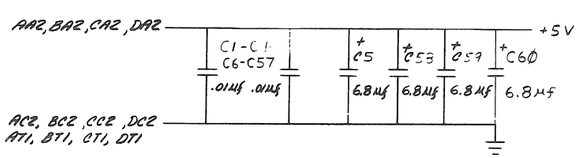

FIRST USED ON OPTION MODEL
RK11-D

DEC NO.	EIA NO.	DEC NO.	EIA NO.
		DEC 6534B	NONE
		IN748A	IN748A

SEMICONDUCTOR CONVERSION CHART

REV	CHANGE NO.	REVISIONS
E		ORIGINATED
1		CHK

ETCH BOARD REV E

DRN. DATE 4-5-73
CHK DATE
ENG DATE 3/14/73
PROJ. ENGR DATE 3/14/73
PROD DATE 3/15/73

NEXT HIGHER ASSY B-DD-RK11-D

SCALE NONE

SHEET 2 OF

digital EQUIPMENT CORPORATION MAYNARD, MASSACHUSETTS

TITLE STATUS CONTROL RK11-D

SIZE D CODE CS NUMBER M7254-0-1 REV. H

DIST.

BRUNING 40-522 16699

DEC FORM NO ORD-135A

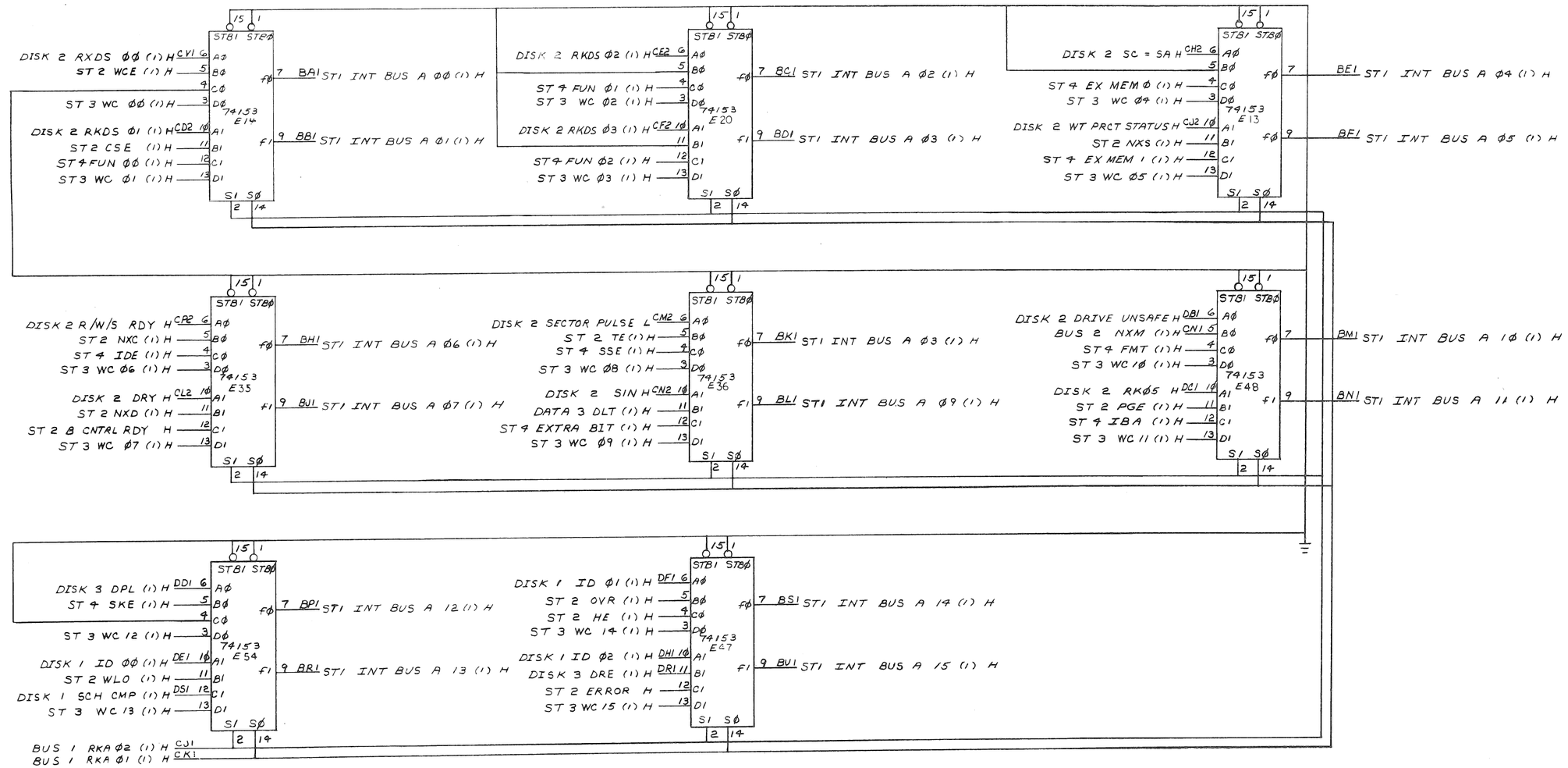

NOTES:
1. CUT W3 FOR 16 BIT OPERATION (RK11-D)
2. CUT W1 FOR 18 BIT OPERATION (RK11-E)
   CUT W2 FOR 16 BIT OPERATION (RK11-D)
3. CUT W5 FOR NORMAL OPERATION (CHECKS HEADER 16 TIMES BEFORE FLAGGING SEEK ERROR)
   CUT W4 FOR RK11-C COMPATABILITY (CHECKS HEADER ONCE)

FIRST USED ON OPTION/MODEL	QTY.	DESCRIPTION	PART NO.	ITEM NO.
RK11-D		PARTS LIST		

UNLESS OTHERWISE SPECIFIED DIMENSION IN INCHES. TOLERANCES
DECIMALS .XXX = .005 .XX = .02 .X = .1
ANGLES ± 0° 30'
REMOVE BURRS AND BREAK SHARP CORNERS SURFACE QUALITY ✓
MATERIAL
FINISH

DRN. DATE 4-4-73
CHKD. DATE
ENG. DATE
PROJ. ENG. DATE
PROD. DATE 6/27/73

digital EQUIPMENT CORPORATION MAYNARD MASSACHUSETTS

TITLE STATUS CONTROL (ST 1)

NEXT HIGHER ASSY. B-DD-RK11-D
SCALE NONE
SHEET 3 OF

SIZE D CODE CS NUMBER M7254-Ø-1 REV. C
DIST.

REVISIONS: REV | CHANGE NO | CHK

BRUNING 40-522 15640
DEC FORM NO DRD 102-B

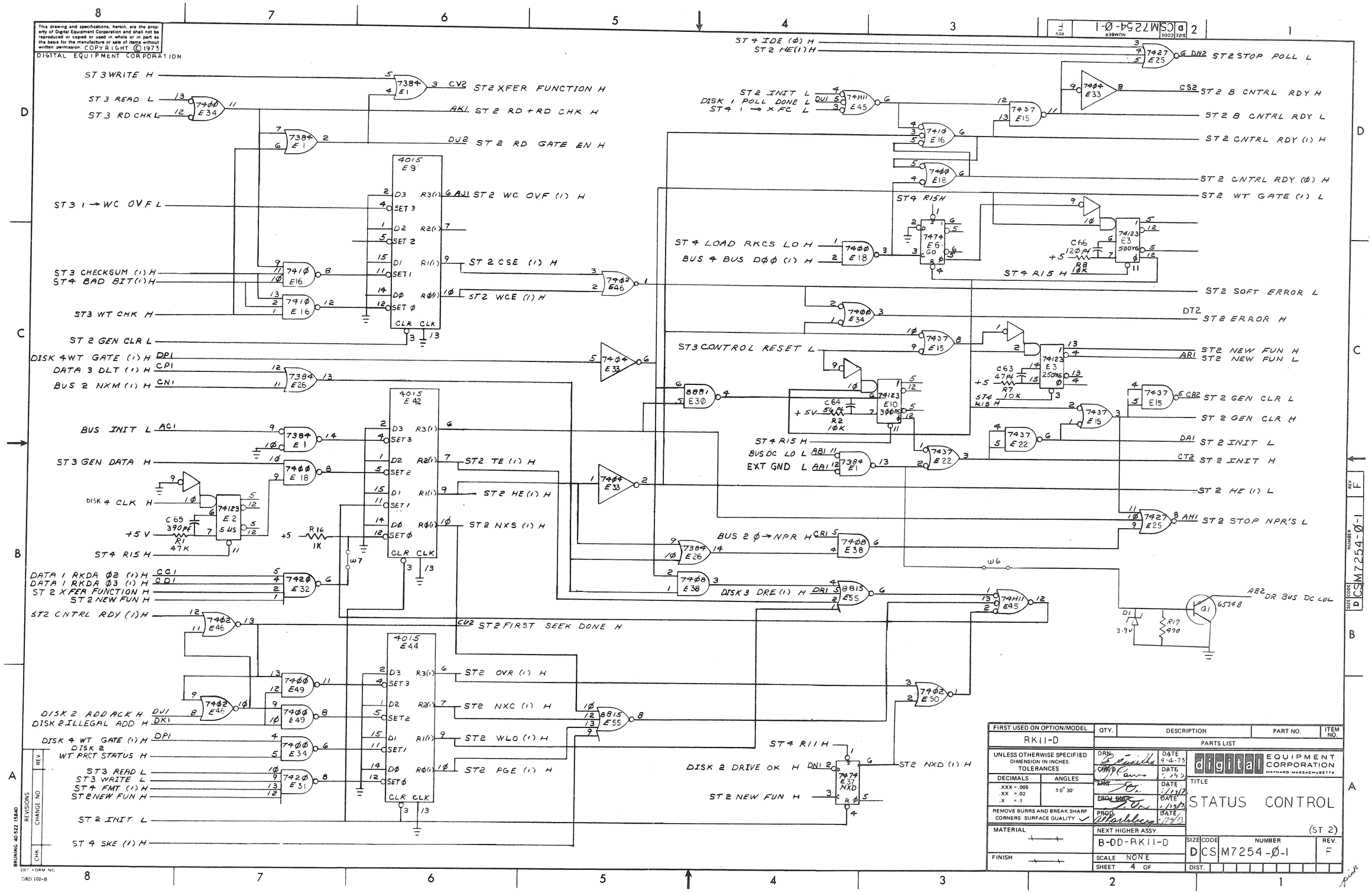

FIRST USED ON OPTION/MODEL	QTY.	DESCRIPTION	PART NO.	ITEM NO.
RK11-D		PARTS LIST		

UNLESS OTHERWISE SPECIFIED DIMENSION IN INCHES. TOLERANCES

DECIMALS	ANGLES
.XXX = .005	±0° 30'
.XX = .02	
.X = .1	

REMOVE BURRS AND BREAK SHARP CORNERS SURFACE QUALITY ✓

MATERIAL

FINISH

DRN. DATE 9-4-73
CHKD. DATE
ENG. DATE
PROJ. ENGR. DATE
PROD. DATE

digital EQUIPMENT CORPORATION MAYNARD MASSACHUSETTS

TITLE STATUS CONTROL (ST 2)

NEXT HIGHER ASSY. B-DD-RK11-D

SCALE NONE

SHEET 4 OF

SIZE D CODE CS NUMBER M7254-Ø-1 REV. F

DIST.

REVISIONS: REV / CHANGE NO / CHK

BRUNING 40 522 15840

DEC FORM NO. DRD 102-B

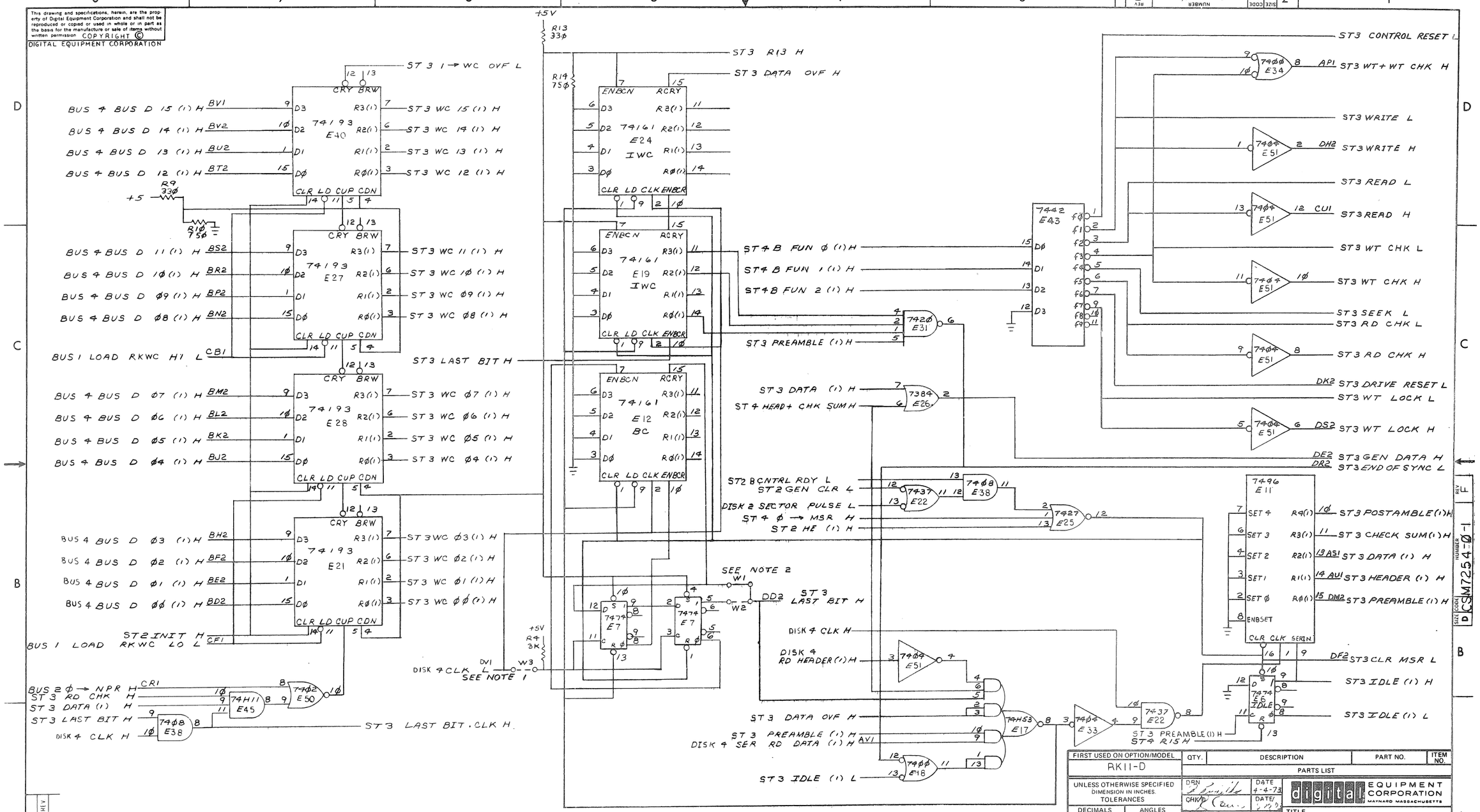

FIRST USED ON OPTION/MODEL	QTY.	DESCRIPTION	PART NO.	ITEM NO.
RK11-D		PARTS LIST		

UNLESS OTHERWISE SPECIFIED DIMENSION IN INCHES. TOLERANCES

DECIMALS	ANGLES
.XXX = .005 .XX = .02 .X = 1	±0° 30'

REMOVE BURRS AND BREAK SHARP CORNERS SURFACE QUALITY ✓

MATERIAL

FINISH

		DATE
DRN		4-4-73
CHK'D		DATE/
ENG		DATE
PROJ ENG		DATE
PROD		DATE 5/29/73

NEXT HIGHER ASSY. B-DD-RK11-D

SCALE NONE

SHEET 5 OF

digital EQUIPMENT CORPORATION MAYNARD MASSACHUSETTS

TITLE STATUS CONTROL (ST 3)

SIZE	CODE	NUMBER	REV.
D	CS	M7254-Ø-1	F

DIST.

REVISIONS: REV / CHANGE NO / CHK

BRUNING 40 522 15840

DRD 102-B

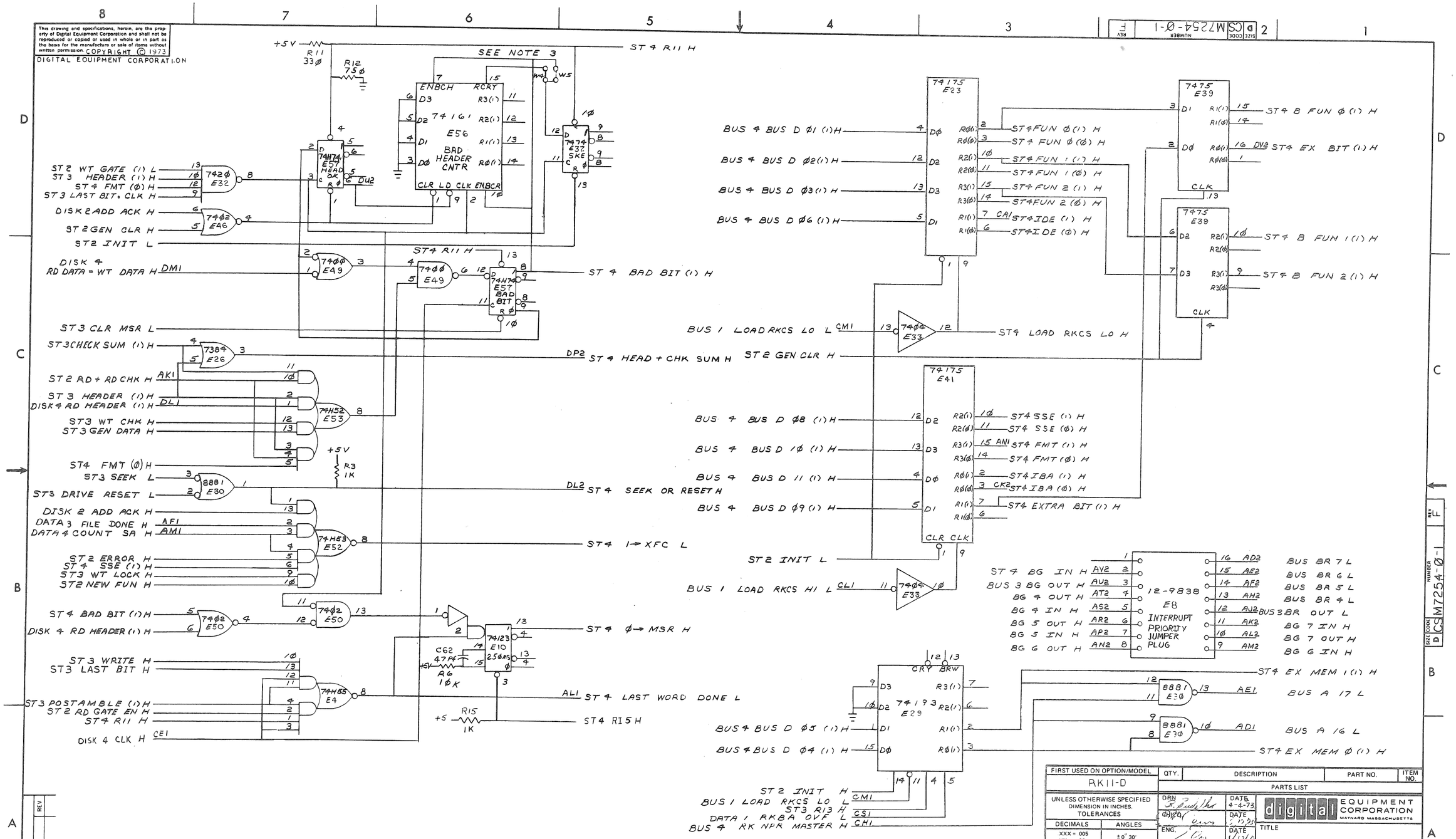

FIRST USED ON OPTION/MODEL	QTY.	DESCRIPTION	PART NO.	ITEM NO.
RK11-D		PARTS LIST		

UNLESS OTHERWISE SPECIFIED DIMENSION IN INCHES. TOLERANCES

DECIMALS	ANGLES
.XXX = 005	±0° 30'
.XX = 02	
.X = 1	

REMOVE BURRS AND BREAK SHARP CORNERS SURFACE QUALITY ✓

MATERIAL

FINISH

		DATE
DRN	K. Lindsther	4-4-73
CHK'D		
ENG.		
PROJ. ENG.		
PROD.	H. Fairbairn	4/19/73

digital EQUIPMENT CORPORATION MAYNARD MASSACHUSETTS

TITLE STATUS CONTROL (ST 4)

NEXT HIGHER ASSY. B-DD-RK11-D

SCALE NONE

SHEET 6 OF

SIZE	CODE	NUMBER	REV.
D	CS	M7254-0-1	F

DIST.

REVISIONS: REV / CHANGE NO / CHK

BRUNING 40-522 15940

DEC FORM NO DRD 102-B

PAGE REVISION CONTROL SHEET

SH NO.	PAGE REVISIONS														REMARKS
1	B	C	D	E	F	H	F1	J	F2	K	L	M	N	P	
2	B	C	C	C	C	D	C1	E	C1	E	F	F	H	J	
3	B	C	C	C	C	D	C1	D	D1	D	D	D	D	D	
4	B	B	B	C	D	E	D1	E	D1	E	E	F	F	F	DISK1
5	B	B	B	B	B	C	B1	D	B1	D	E	E	F	F	DISK2
6	B	B	C	C	C	D	C1	D	C1	D	D	D	D	D	DISK3
7	B	C	D	D	D	E	D1	E	D1	E	E	F	H	J	DISK 4

ECO NO.	—	00001-IA	00002	00003	00004	00005	00006	00006	00007	00007	00008	00009	00010	00011						
ETCH REV.	C	D	D	D	D	E	C&D	E	C&L	E	E	E	F	P						
ENG.	—	7.D	7.D	7.D	REE	7.D.	7.D	7.D.	7.D	7.D.	7.D.	7.D.	REE	R.E.						
DATE	—	10-27	2-15-73	4/6/73	5/29/73	7/17/73	10/10/73	1/4/72	1/8/74	1/8/74	4/9/74	10/14/74	3/20/75	7/23/76						

FIRST USED ON OPTION/MODEL

RK11-D

DRN. G. Wilson	DATE 10/11/72	digital EQUIPMENT CORPORATION MAYNARD MASSACHUSETTS
CHK'D.	DATE	
ENG.	DATE 10/12/72	TITLE DISK CONTROL RK11-D
PROJ. ENG.	DATE	
PROD.	DATE	

NEXT HIGHER ASSY. 6-DD-RK11-D

SCALE —

SHEET 1 OF 7

SIZE	CODE	NUMBER	REV.
B	CS	M7255-Ø-1	P

DIST.

SIZE D CODE CS NUMBER M7255-0-1 REV J

NOTES:

1.) IF 8640'S (ITEM #33) ARE NOT AVAILABLE, USE 11380'S PART NO. 19-11113

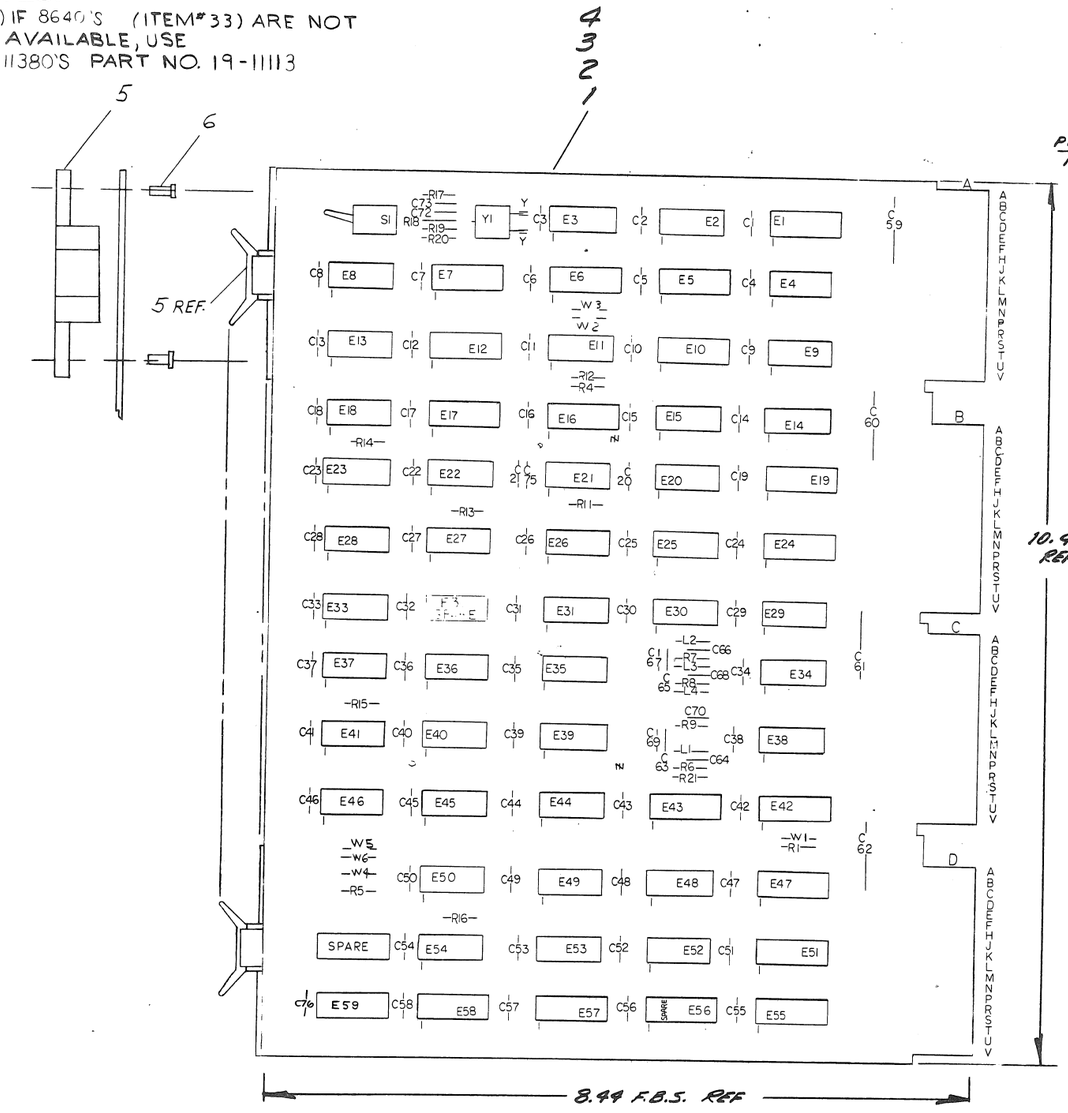

I.C. DEC 8640	1	8
I.C. DEC 380	1	8
I.C. DEC 74193	8	16
I.C. DEC 74175	8	16
I.C. DEC 74161	8	16
I.C. DEC 74151	8	16
I.C. DEC 74157	8	16
I.C. DEC 7496	5	12
I.C. DEC 314	1	8
I.C. DEC 7482	11	4
I.C. DEC 74174	8	16
I.C. DEC 7476	5	13
I.C. DEC 7442	8	16
I.C. DEC 74123	8	16
IC TYPE	GND	+ 5V

GND AND 5V ARE USUALLY PIN 7 AND 14 RESPECTIVELY EXCEPTIONS ARE STATED ABOVE

IC PIN LOCATIONS

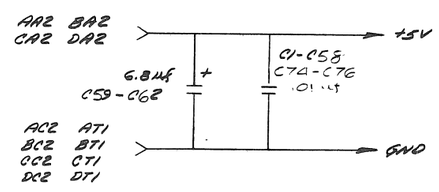

QTY	REF DESIGNATION	DESCRIPTION	PART NO.	ITEM NO.
3	W1, W2, W6	INSULATED JUMPER L=2007-1	9009185	53
2		SPLIT LUGS	9006735	52
2		SWAGE LUGS	9007791	51
1	S1	SWITCH TOGGLE SPDT	1210209	50
4	L1-L4	INDUCTOR, 100UH, 165MA 10%	1610662	49
1	Y1	CRYSTAL (SEE TABLE 1)		48
10	E11, E16, E22, E27, E41, E48, E49, E52-E54	I.C. DEC 7474	1905547	47
1	E50	I.C. DEC 74H04	1909931	46
2	E13, E46	I.C. DEC 7408	1910155	45
1	E59	I.C. DEC 314	1909704	44
1	E55	I.C. DEC 74161	1910650	43
1	E31	I.C. DEC 8815	1909713	42
1	E43	I.C. DEC 7442	1910046	41
1	E7	I.C. DEC 7476	1905585	40
1	E6	I.C. DEC 74174	1910652	39
1	E28	I.C. DEC 7482	1905584	38
1	E18	I.C. DEC 74H21	1909058	37
1	E36	I.C. DEC 74H50	1909060	36
1	E37	I.C. DEC 7450	1905580	35
1	E34	I.C. DEC 8242	1909718	34
6	E20, E21, E25, E29, E30, E38	I.C. DEC ECL10	1911469	33
2	E12, E17	I.C. DEC 74193	1910018	32
2	E42, E47	I.C. DEC 74157	1910655	31
1	E57	I.C. DEC 74151	1909286	30
2	E51, E58	I.C. DEC 74175	1910651	29
1	E3	I.C. DEC 380	1912549	28
5	E2, E4, E9, E14, E15	I.C. DEC 8881	1909705	27
				26
1	E35	I.C. DEC. 7420	1905577	25
3	E23, E39, E45	I.C. DEC 7410	1905576	24
3	E3, E40, E44	I.C. DEC 7400	1905575	23
2	E5, E10	I.C. DEC 7496	1910363	22
2	E26, E33	I.C. DEC 7404	1909686	21
7	R1, R4, R12, R13, R15, R16, R21	RES. 1K 1/4W 5%	1300365	20
1	R5	RES. 3K 1/4W 5%	1300432	19
4	R6 - R9	RES. 910Ω 1/4W 5%	1305374	18
2	R17, R18	RES. 10K 1/4W 5%	1300479	17
				15
2	R11, R14	RES. 390Ω 1/4W 5%	1300309	15
2	R19, R20	RES. 470Ω 1/4W 5%	1300316	14
3	E1, E3, E24	RES. PACK	1311003-01	13
2	C72, C73	CAP. 0.05PF 100V 20%	1001765	12
4	C63, C65, C67, C69	CAP 270 PF 100V 5% DIM	1000022	11
4	C64, C66, C68, C70	CAP. 39PF 100V 5% DIM	1000010	10
60	C1-C58, C75, C76	CAP. .01uf 100V 20% AXIAL	1001610	9
4	C59 - C62	CAP. 6.8uf 35V 10% TANT	1005306	8
				7
8		EYELET (GS-4-7) STAMPSON	9006732	6
4		HANDLE FLIP-CHIP MAGENTA	9008337-06	5
1		ETCHED CIRCUIT BOARD	5009986	4
REF		MODULE ECO HISTORY	B-MM-M7255-0-6	3
REF		ASSY/DRILLING HOLE LAYOUT	D-AM-M7255-0-5	2
REF		X-Y COORDINATE HOLE LOCATION	KCO-M7255-0-4	1

PARTS LIST

FIRST USED ON OPTION MODEL: RK11-D

ETCH BOARD REV: F

CHANGE NO.	REVISIONS	REV

DEC NO.	EIA NO.	DEC NO.	EIA NO.

SEMICONDUCTOR CONVERSION CHART

DRN DATE 6-4-72
CHK'D DATE 7-2-73
ENG. DATE 7/2/73
PROJ. ENG. DATE 7/2/73
PROD. DATE 7/2/73

digital EQUIPMENT CORPORATION MAYNARD, MASSACHUSETTS

TITLE: DISK CONTROL RK11-D

NEXT HIGHER ASSY: B-DD-RK11-D

SCALE: NONE

SIZE D CODE CS NUMBER M7255-0-1 REV. J

SHEET 2 OF

DIST.

BRUNING 40-522 16699

DEC FORM NO DRD 135A

NOTES:

1.) INSTALL W1 FOR RKØ5.
2.) CUT W4 FOR RK11-C COMPATIBILITY (NORMAL OPERATION)
3.) FOR RK11-D (RKØ5) CUT JUMPER W3 FOR RK11-E (18 BIT RKØ5) CUT JUMPER W2.
4.) FOR NORMAL OPERATION INSTALL W6 (CHANGES ID BITS ONLY FOR SEARCH COMPLETE INTERRUPT). INSTALL W5 TO CHANGE ID BITS FOR ANY INTERRUPT.
5.) INSTALL PROPER CRYSTAL IN SPLIT LUGS AS OUTLINED IN TABLE I.

TABLE I

	DISK	BITS/WORD	MHZ	DEC P/N
RK11-D	RKØ5	16	2.88Ø	18-1Ø694-3
RK11-E	RKØE	18	3.Ø9Ø	18-1Ø6 14-4

FIRST USED ON OPTION/MODEL	QTY.	DESCRIPTION	PART NO.	ITEM NO.
RK11-D		PARTS LIST		

UNLESS OTHERWISE SPECIFIED
DIMENSION IN INCHES
TOLERANCES

DECIMALS	ANGLES
.xxx = .005 .xx = .02 .x = .1	±0° 30'

REMOVE BURRS AND BREAK SHARP CORNERS SURFACE QUALITY ▽

MATERIAL

FINISH

DRN. DATE
CHK'D. DATE
ENG. DATE
PROJ. ENG. DATE
PROD. DATE

digital EQUIPMENT CORPORATION MAYNARD MASSACHUSETTS

TITLE DISK CONTROL RK11-D

NEXT HIGHER ASSY. B-DD-RK11-D

SCALE NONE
SHEET 2 OF

SIZE	CODE	NUMBER	REV.
D	CS	M7255-Ø-1	D

DIST.

REVISIONS: CHK | CHANGE NO | REV

SIZE D CODE CS NUMBER M7255-Ø-1 REV D

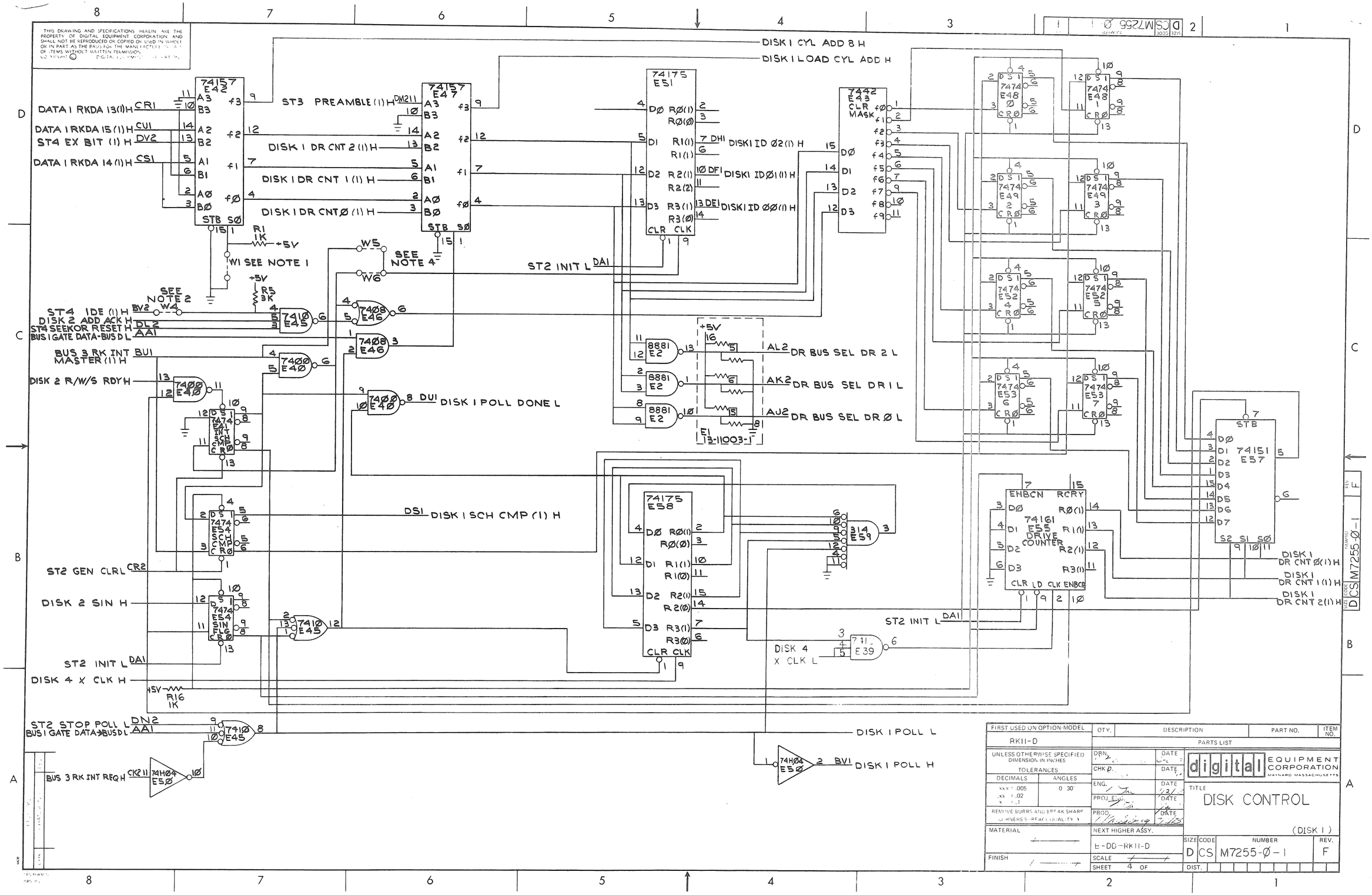

FIRST USED ON OPTION-MODEL	QTY.	DESCRIPTION	PART NO.	ITEM NO.
RK11-D		PARTS LIST		

UNLESS OTHERWISE SPECIFIED DIMENSION IN INCHES
TOLERANCES
DECIMALS: xxx = .005, .xx = .02, x = .1 — ANGLES: 0 30'
REMOVE BURRS AND BREAK SHARP CORNERS (REF. QUALITY)

DRN. — DATE
CHK D. — DATE
ENG. — DATE
PROJ. ENG. — DATE
PROD. — DATE

digital EQUIPMENT CORPORATION MAYNARD MASSACHUSETTS

TITLE: DISK CONTROL (DISK 1)

MATERIAL
FINISH
NEXT HIGHER ASSY.: E-DD-RK11-D
SCALE
SHEET 4 OF

SIZE	CODE	NUMBER	REV.
D	CS	M7255-Ø-1	F

DIST.

DIGITAL EQUIPMENT CORPORATION

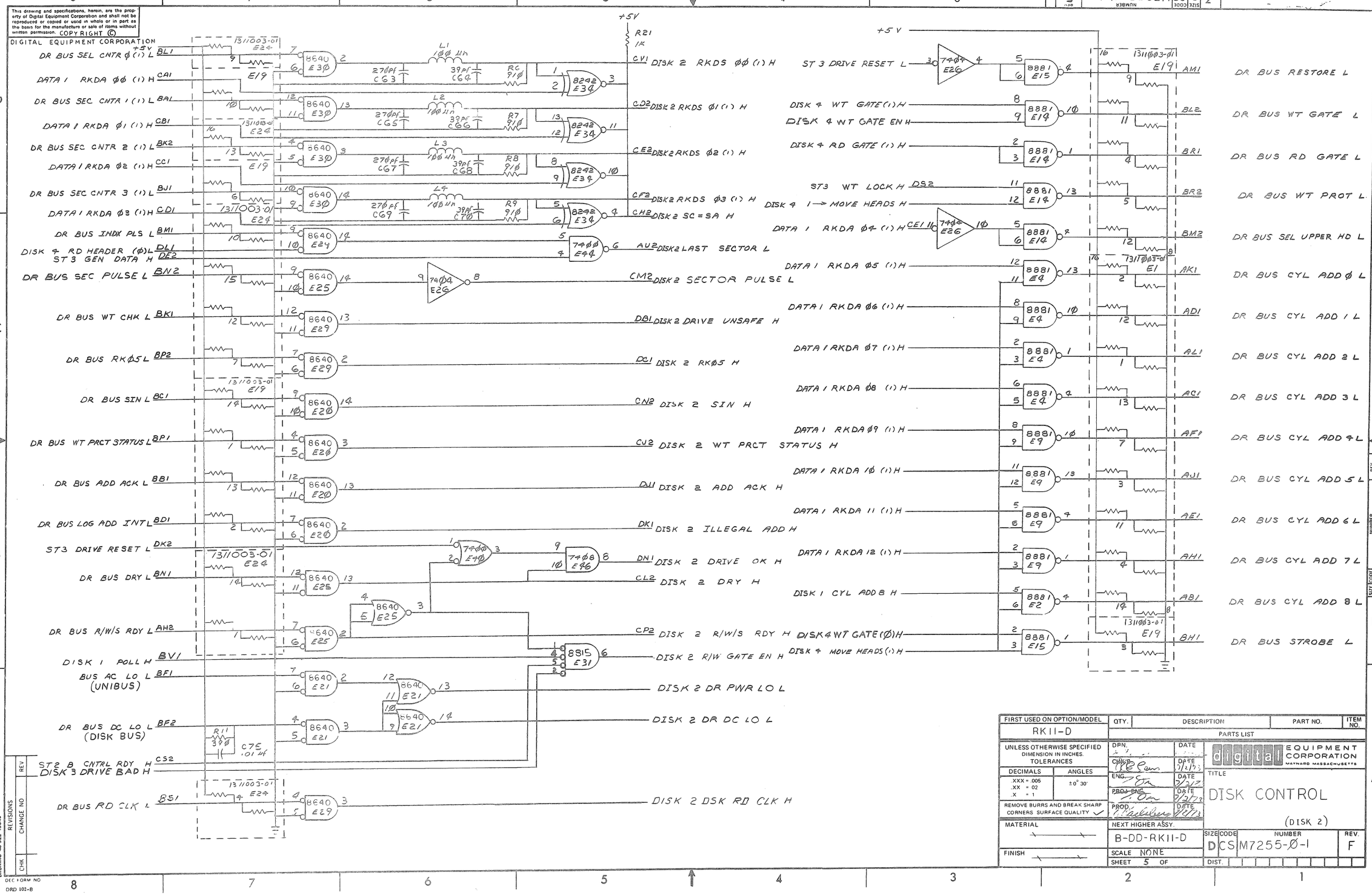

FIRST USED ON OPTION/MODEL	QTY.	DESCRIPTION	PART NO.	ITEM NO.
RK11-D		PARTS LIST		

UNLESS OTHERWISE SPECIFIED DIMENSION IN INCHES. TOLERANCES

DECIMALS	ANGLES
.XXX = .005 .XX = .02 .X = 1	±0° 30'

REMOVE BURRS AND BREAK SHARP CORNERS SURFACE QUALITY ✓

MATERIAL

FINISH

		DATE
DRN.		
CHKD.		7/2/73
ENG.		7/2/73
PROJ. ENG.		7/2/73
PROD.		7/2/73

digital EQUIPMENT CORPORATION MAYNARD MASSACHUSETTS

TITLE DISK CONTROL (DISK 2)

NEXT HIGHER ASSY. B-DD-RK11-D

SCALE NONE

SHEET 5 OF

SIZE	CODE	NUMBER	REV.
D	CS	M7255-Ø-1	F

DIST.

REVISIONS: REV | CHANGE NO | CHK

BRUNING 40-522 158/60

DEC FORM NO DRD 102-B

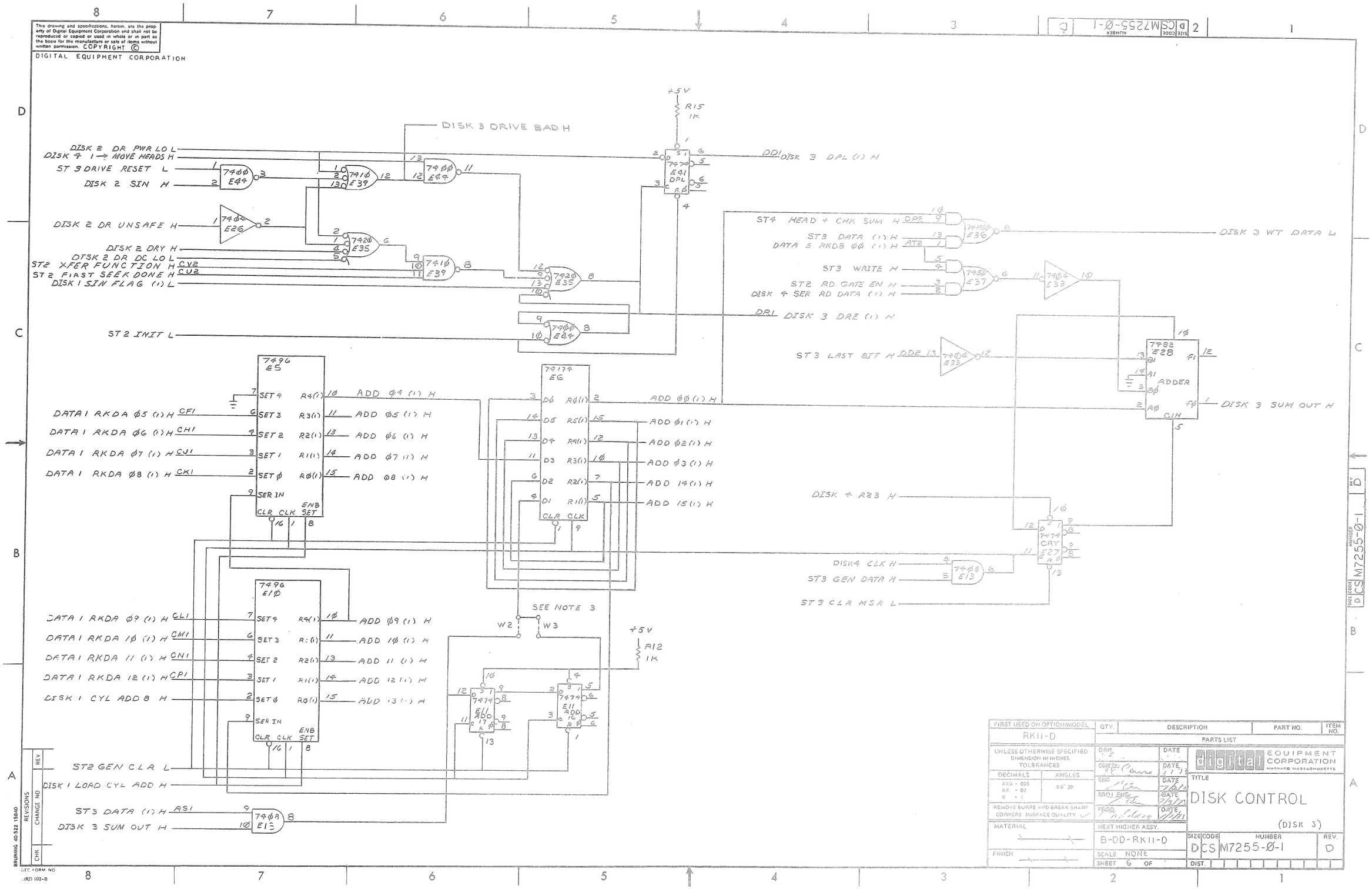

FIRST USED ON OPTION/MODEL	QTY.	DESCRIPTION	PART NO.	ITEM NO.
RK11-D		PARTS LIST		

UNLESS OTHERWISE SPECIFIED DIMENSION IN INCHES TOLERANCES
DECIMALS: XXX ± .005, XX ± .02, X ± .1
ANGLES: ± 0° 30'
REMOVE BURRS AND BREAK SHARP CORNERS. SURFACE QUALITY ✓

DRN. — DATE
CHK'D — DATE
ENG — DATE
RROJ ENG — DATE
PROD — DATE

digital EQUIPMENT CORPORATION MAYNARD MASSACHUSETTS

TITLE: DISK CONTROL (DISK 3)

MATERIAL
FINISH
NEXT HIGHER ASSY. B-DD-RK11-D
SCALE NONE
SHEET 6 OF

SIZE	CODE	NUMBER	REV.
D	CS	M7255-Ø-1	D

DIST.

REVISIONS: REV. / CHANGE NO. / CHK

BRUNING 40-522 15040
DEC FORM NO. ORD 102-B

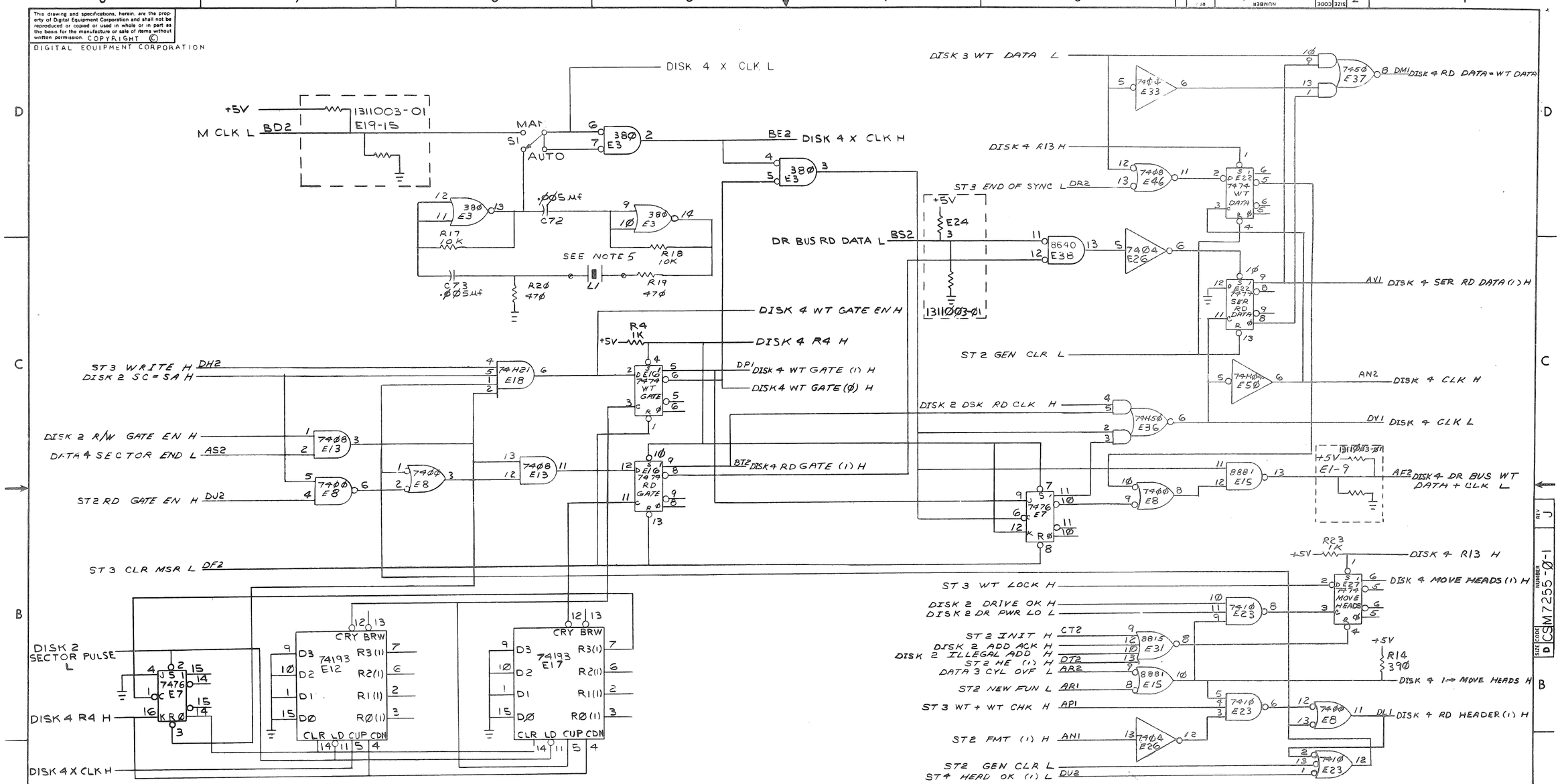

FIRST USED ON OPTION/MODEL	QTY.	DESCRIPTION	PART NO.	ITEM NO.
RK11-D		PARTS LIST		

UNLESS OTHERWISE SPECIFIED DIMENSION IN INCHES. TOLERANCES

DECIMALS	ANGLES
.XXX = .005 .XX = .02 .X = .1	±0° 30'

REMOVE BURRS AND BREAK SHARP CORNERS SURFACE QUALITY ✓

MATERIAL

FINISH

DRN. DATE 6-15-75
CHK. DATE
ENG. DATE
PROJ. ENG. DATE
PROD. DATE

digital EQUIPMENT CORPORATION MAYNARD MASSACHUSETTS

TITLE DISK CONTROL (DISK 4)

NEXT HIGHER ASSY. B-DD-RK11-D

SCALE NONE

SHEET 7 OF

SIZE	CODE	NUMBER	REV.
D	CS	M7255-Ø-1	J

DIST.

REVISIONS

CHK	CHANGE NO	REV

BRUNING 40-522 15840

DEC FORM NO DRD 102-B

PAGE REVISION CONTROL SHEET

SH NO.	PAGE REVISIONS							REMARKS
1	A	B	C	D	E	F	H	
2	A	B	B	B	C	D	E	
3	A	B	B	C	D	D	D	(DATA 1)
4	A	A	A	A	A	A	A	(DATA 2)
5	A	B	C	C	C	C	C	(DATA 3)
6	A	B	B	B	C	D	E	(DATA 4)
7	A	B	B	C	D	D	E	(DATA 5)

ECO NO.		00001	00002	00003	00004	545A	00006
ETCH REV.	B	C	C	C	D	D	D
ENG.		RCC	TB	RCC	RCC	TB	TB
DATE		12-7-72	3/6/73	6-25-73	8-6-73	1-10-74	12-12-74

FIRST USED ON OPTION/MODEL

RK11-D

DRN.		DATE 10/27/72
CHK'D.		DATE
ENG.		DATE 10/27/72
PROJ. ENG.		DATE 10/27/72
PROD.	R. Dunley	DATE 10/23/72

digital EQUIPMENT CORPORATION
MAYNARD, MASSACHUSETTS

TITLE

DATA PATHS

(RK11-D)

NEXT HIGHER ASSY.: B-DD-RK11-D

SCALE: —

SHEET 1 OF 7

SIZE	CODE	NUMBER	REV.
B	CS	M7256-Ø-1	H

DIST.

NOTES:

* DEC 8640'S WERE PHASED IN AS 380 REPLACEMENTS. ANY 380 FAILURES SHOULD BE REPLACED BY 8640'S

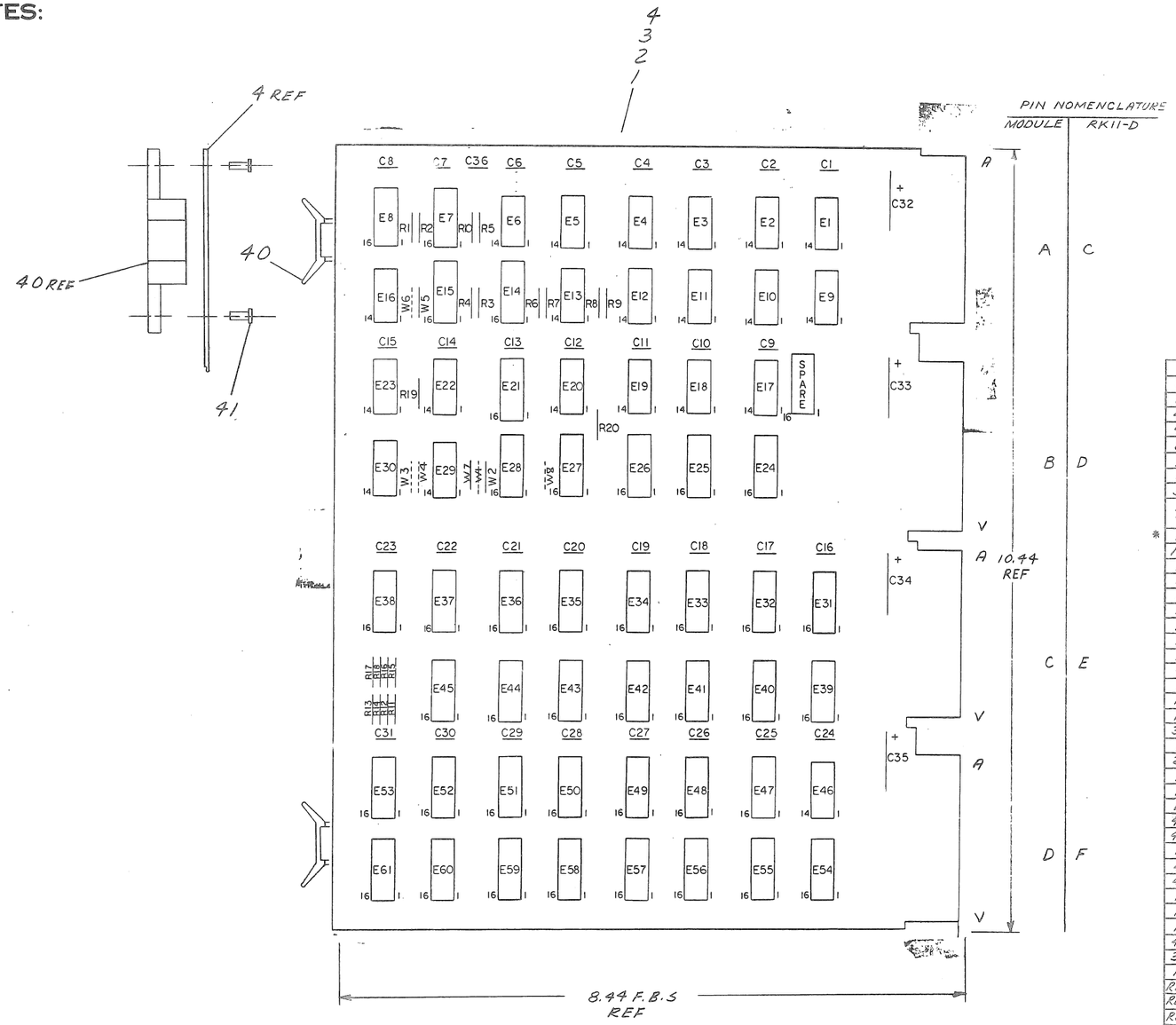

PIN NOMENCLATURE

MODULE	RK11-D
A	C
B	D
C	E
D	F

QTY	REF DESIGNATION	DESCRIPTION	PART NO.	ITEM NO.
1	R6	5.6K 1/4 W 5% CC	1301876	43
3	W2, W5, W7	INSULATED JUMPER L-2007-1	9009185	42
8		EYELET #654-7 E.B. STIMPSON	9006732	41
4		HANDLE, FLIP CHIP MAGENTA	9008337-16	40
4	E52, E53, E60, E61	I.C. DEC 74157	1910655	39
8	E48-E51, E56-E59	I.C. DEC 74153	1909937	38
1	E46	I.C. DEC 8281 DC	1909490	37
1	E38	DIP RESISTOR PACK	1311003-02	36
5	E33-E37	I.C. DEC 74170	1910738	35
7	E31, E32, E39, E40, E47, E54, E55	I.C. DEC 74193	1910018	34
* 1	E30	I.C. DEC 8640	1911469	33
10	E24-E28, E41-E45	I.C. DEC 8271	1909615	32
1	E23	I.C. DEC 8881	1909705	31
2	E22, E29	I.C. DEC 7473	1905587	30
1	E21	I.C. DEC 4007	1909867	29
1	E16	I.C. DEC 74H21	1909058	28
1	E17	I.C. DEC 7437	1910091	27
1	E13	I.C. DEC 7412	1909755	26
1	E12	I.C. DEC 7400	1905575	25
4	E11, E16, E19, E20	I.C. DEC 7474	1905547	24
1	E10	I.C. DEC 74H10	1909057	23
1	E9	I.C. DEC 74H55	1909063	22
1	E8	I.C. DEC 74161	1910650	21
3	E7, E14, E15	I.C. DEC 74123	1910936	20
1	E5	I.C. DEC 74H74	1909667	19
2	E4, E6	I.C. DEC 74H50	1909060	18
1	E3	I.C. DEC 7402	1909004	17
1	E2	I.C. DEC 74H04	1909731	16
1	E1	I.C. DEC 7408	1910155	15
4	R15-R18	RES. 680Ω 1/4W 5% CC	1301424	14
4	R11-R14	RES 330Ω 1/4W 5% CC	1300295	13
1	R10	RES. 20K 1/4W 5% CC	1302391	12
4	R8, R9, R19, R20	RES. 1K 1/4W 5% CC	1300365	11
4	R3-R5, R7	RES. 5.11K 1/4W 1% MF	1304854	10
1	R2	RES. 390Ω 1/4W 5% CC	1300309	9
1	R1	RES. 180Ω 1/4W 5% CC	1301322	8
1	C36	CAP 150PF 100V 5% D.M.	1000019	7
4	C32-C35	CAP. 6.8 µF 35V 20% TANT	1000067	6
31	C1-C31	CAP. .01 µF 100V 20% DISC.	1001610	5
1		ETCHED CIRCUIT BOARD	6009987	4
REF		MODULE ECO HISTORY	B-MM-M7256-0-6	3
REF		ASSY/DRILLING HOLE LAYOUT	D-MM-M7256-0-5	2
REF		X-Y COORDINATE HOLE LOCATION	K-CO-M7256-0-4	1

PARTS LIST

DEC 7007	8	16	
DEC 7473	11	4	
DEC 74170	8	16	
DEC 74193	8	16	
DEC 74161	8	16	
DEC 74157	8	16	
DEC 74153	8	16	
DEC 8271	8	16	
DEC 8640	1	8	
IC TYPE	GND	+ 5V	

GND AND 5V ARE USUALLY PIN 7 AND 14 RESPECTIVELY EXCEPTIONS ARE STATED ABOVE

IC PIN LOCATIONS

AA2, BA2, CA2, DA2 +5V — C1-C31 .01 µF — C32-C35 6.8 µF

AC2 AT1
BC2 BT1
CC2 CT1
DC2 DT1

FIRST USED ON OPTION MODEL	
RK11-D	

ETCH BOARD REV D

CHANGE NO.	REV

REVISIONS

DEC NO.	EIA NO.	DEC NO.	EIA NO.

SEMICONDUCTOR CONVERSION CHART

		DATE
DRN.		9-20-72
CH'ND.		10/01/72
ENG.		10/24/72
PROJ. ENG.		10/26/72
PROD.		11/03/72

NEXT HIGHER ASSY E-CC-RK11-D

SCALE —/—

SHEET 2 OF

digital EQUIPMENT CORPORATION MAYNARD, MASSACHUSETTS

TITLE DATA PATHS

SIZE D CODE CS NUMBER M7256-0-1 REV. E

DIST.

DEC FORM NO. DRD-135A

BRUNING 40-S22 16699

NOTES:
1. CUT W1 FOR 16 BIT OPERATION (RK11-D)
   CUT W2 FOR 18 BIT OPERATION (RK11-E)
2. CUT W3 + W4 FOR 16 BIT OPERATION
3. CUT W5 FOR 18 BIT OPERATION
   CUT W6 FOR 16 BIT OPERATION
4. FOR ETCH REV C & EARLIER
   FOR RK11-E, REMOVE WIRE FROM E28 PIN6 TO E27 PIN10 AND ADD A WIRE FROM E28 PIN6 TO E27 PIN6.
   FOR RK11-D, ADD A WIRE FROM E28 PIN6 TO E27 PIN10 AND CUT ETCH SIDE ONE BETWEEN E28 PIN6 AND E27 PIN6 (REFERENCE ECO# M7256-00003).
   FOR ETCH REV D & LATER
   CUT W7 FOR 18 BIT OPERATION RK11-E
   CUT W8 FOR 16 BIT OPERATION RK11-D

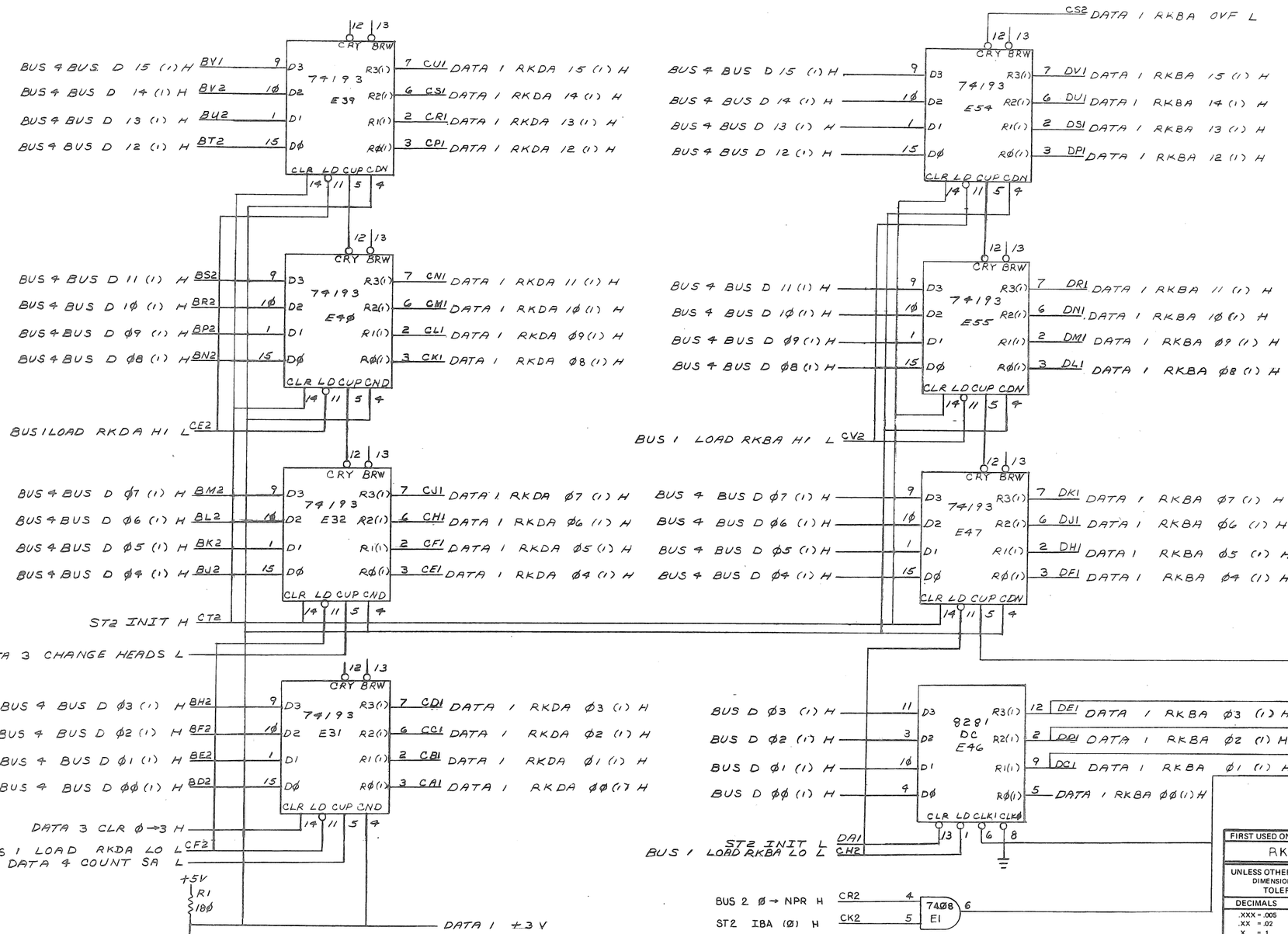

FIRST USED ON OPTION/MODEL	QTY.	DESCRIPTION	PART NO.	ITEM NO.
RK11-D		PARTS LIST		

UNLESS OTHERWISE SPECIFIED DIMENSION IN INCHES. TOLERANCES

DECIMALS	ANGLES
.XXX = .005 .XX = .02 .X = .1	±0° 30'

REMOVE BURRS AND BREAK SHARP CORNERS SURFACE QUALITY ✓

MATERIAL —

FINISH —

DRN. E. Wilson	DATE 8/7/72	digital EQUIPMENT CORPORATION MAYNARD MASSACHUSETTS
CHK'D.	DATE 10/20/72	
ENG.	DATE 10/31/72	TITLE
PROJ. ENG.	DATE 10/20/72	DATA PATHS
PROD. R. Dooley	DATE 10/23/72	(DATA 1)

NEXT HIGHER ASSY. B-DD-RK11-D

SCALE NONE

SHEET 3 OF

SIZE	CODE	NUMBER	REV.
D	CS	M7256-0-1	D

DIST.

REV.	CHANGE NO.	CHK.
	REVISIONS	

BRUNING 40-522 15940

DEC FORM NO DRD 102-B

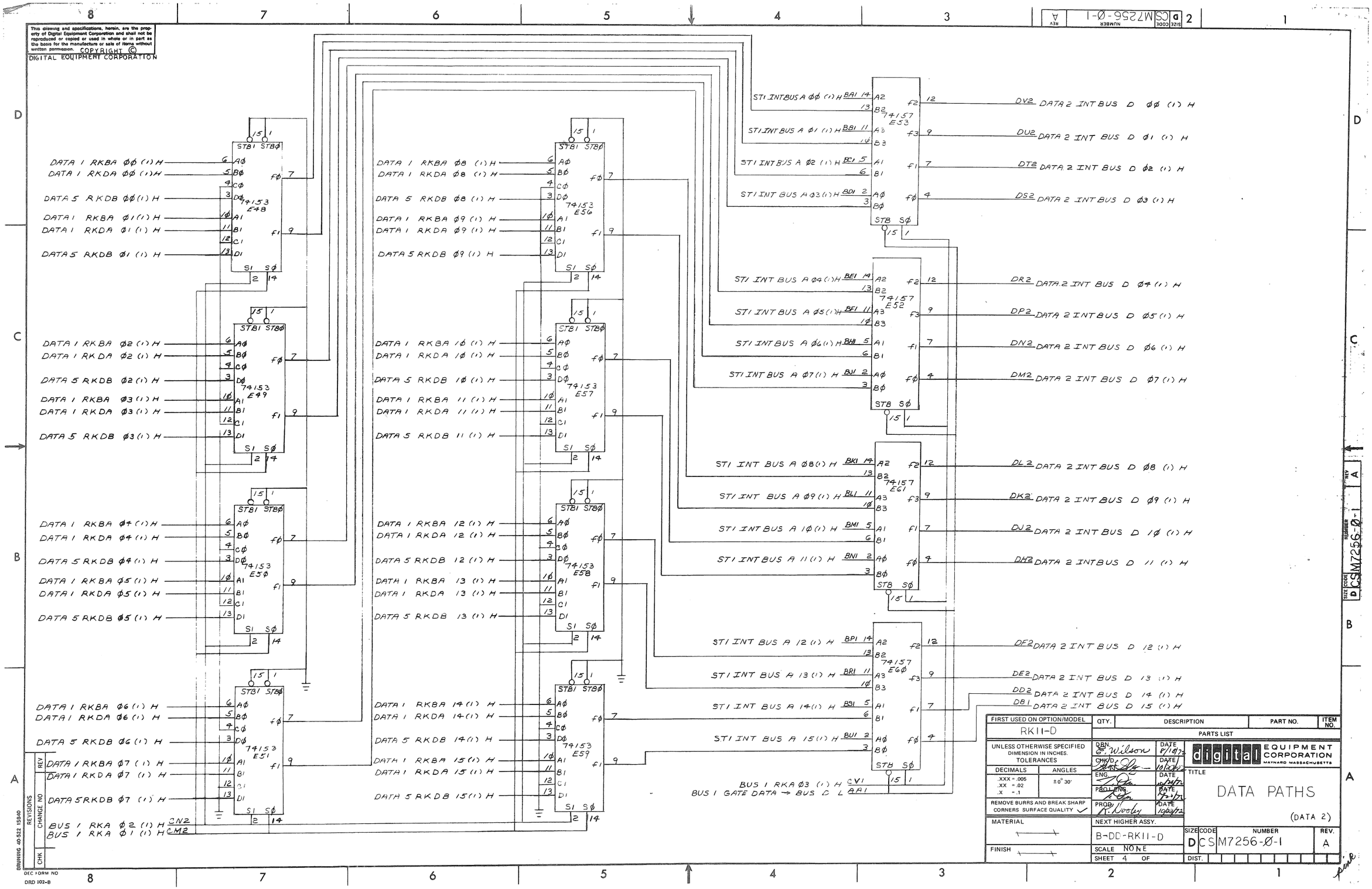

FIRST USED ON OPTION/MODEL	QTY.	DESCRIPTION	PART NO.	ITEM NO.
RK11-D		PARTS LIST		

UNLESS OTHERWISE SPECIFIED DIMENSION IN INCHES. TOLERANCES

DECIMALS	ANGLES
.XXX = .005 .XX = .02 .X = .1	±0° 30'

REMOVE BURRS AND BREAK SHARP CORNERS SURFACE QUALITY ✓

MATERIAL —

FINISH —

DRN. E. Wilson DATE 8/18/72
CHK'D. DATE 10/26/72
ENG. DATE 10/26/72
PROJ. ENG. DATE 12-1-72
PROD. R. Wooley DATE 10/26/72

NEXT HIGHER ASSY. B-DD-RK11-D

SCALE NONE

SHEET 4 OF

digital EQUIPMENT CORPORATION MAYNARD MASSACHUSETTS

TITLE DATA PATHS (DATA 2)

SIZE D CODE CS NUMBER M7256-Ø-1 REV. A

DIST.

REVISIONS: REV. | CHANGE NO | CHK

BRUNING 40-522 15940

DEC FORM NO DRD 102-B

SIZE CODE D CS M7256-Ø-1 REV A

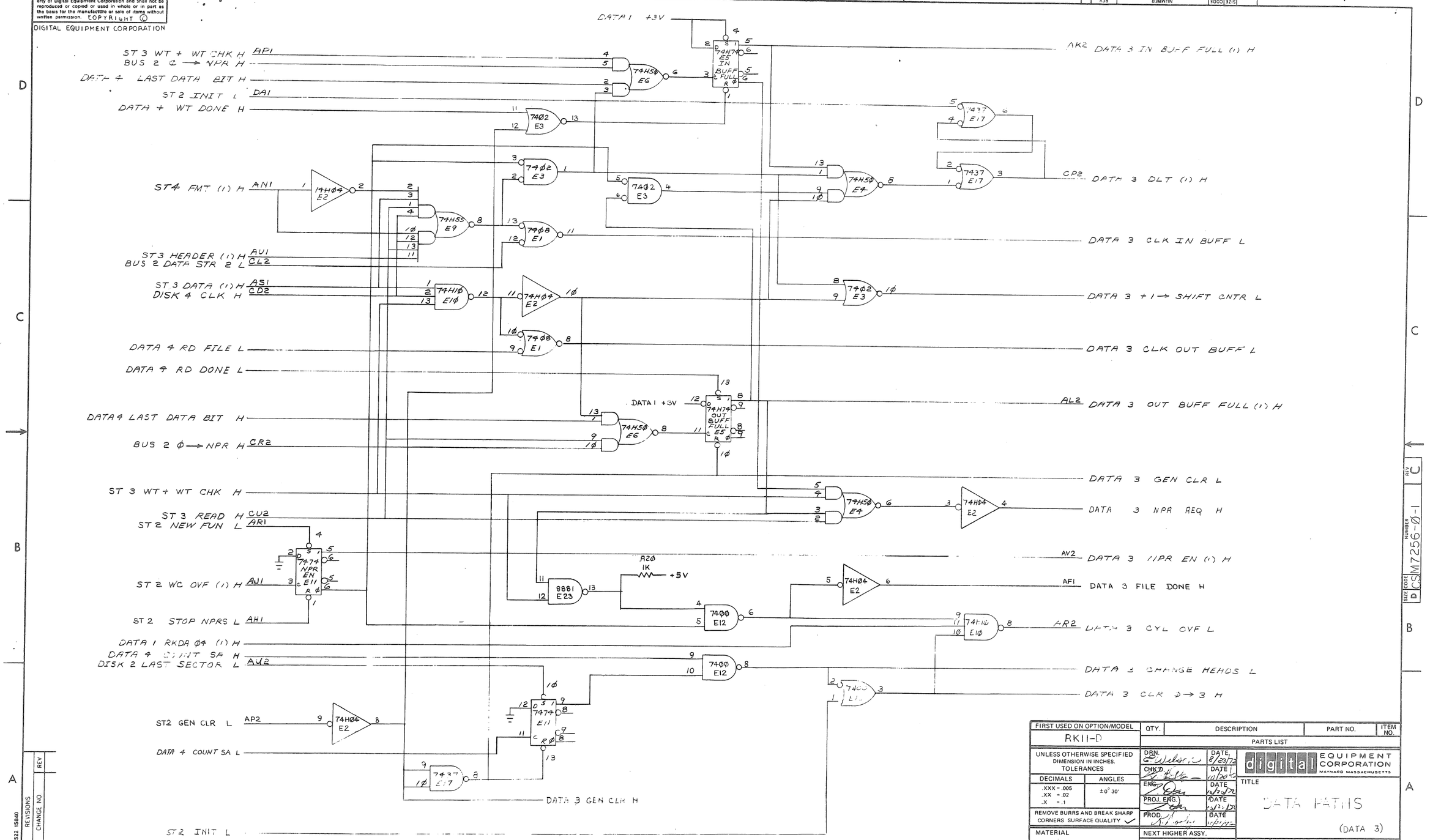

FIRST USED ON OPTION/MODEL	QTY.	DESCRIPTION	PART NO.	ITEM NO.
RK11-D		PARTS LIST		

UNLESS OTHERWISE SPECIFIED DIMENSION IN INCHES. TOLERANCES

DECIMALS	ANGLES
.XXX = .005 .XX = .02 .X = .1	±0° 30'

REMOVE BURRS AND BREAK SHARP CORNERS SURFACE QUALITY ✓

MATERIAL

FINISH

DRN.	DATE 8/23/72	digital EQUIPMENT CORPORATION MAYNARD MASSACHUSETTS
CHK'D.	DATE 11/20/72	
ENG.	DATE 11/20/72	TITLE DATA PATHS (DATA 3)
PROJ. ENG.	DATE 2/12/73	
PROD.	DATE 11/21/72	

NEXT HIGHER ASSY. F-CL-RK11-D

SCALE NONE

SHEET 3 OF

SIZE	CODE	NUMBER	REV.
D	CS	M7256-Ø-1	C

DIST.

REVISIONS: REV | CHANGE NO | CHK

BRUNING 40-522 15840

DEC FORM NO DRD 102-B

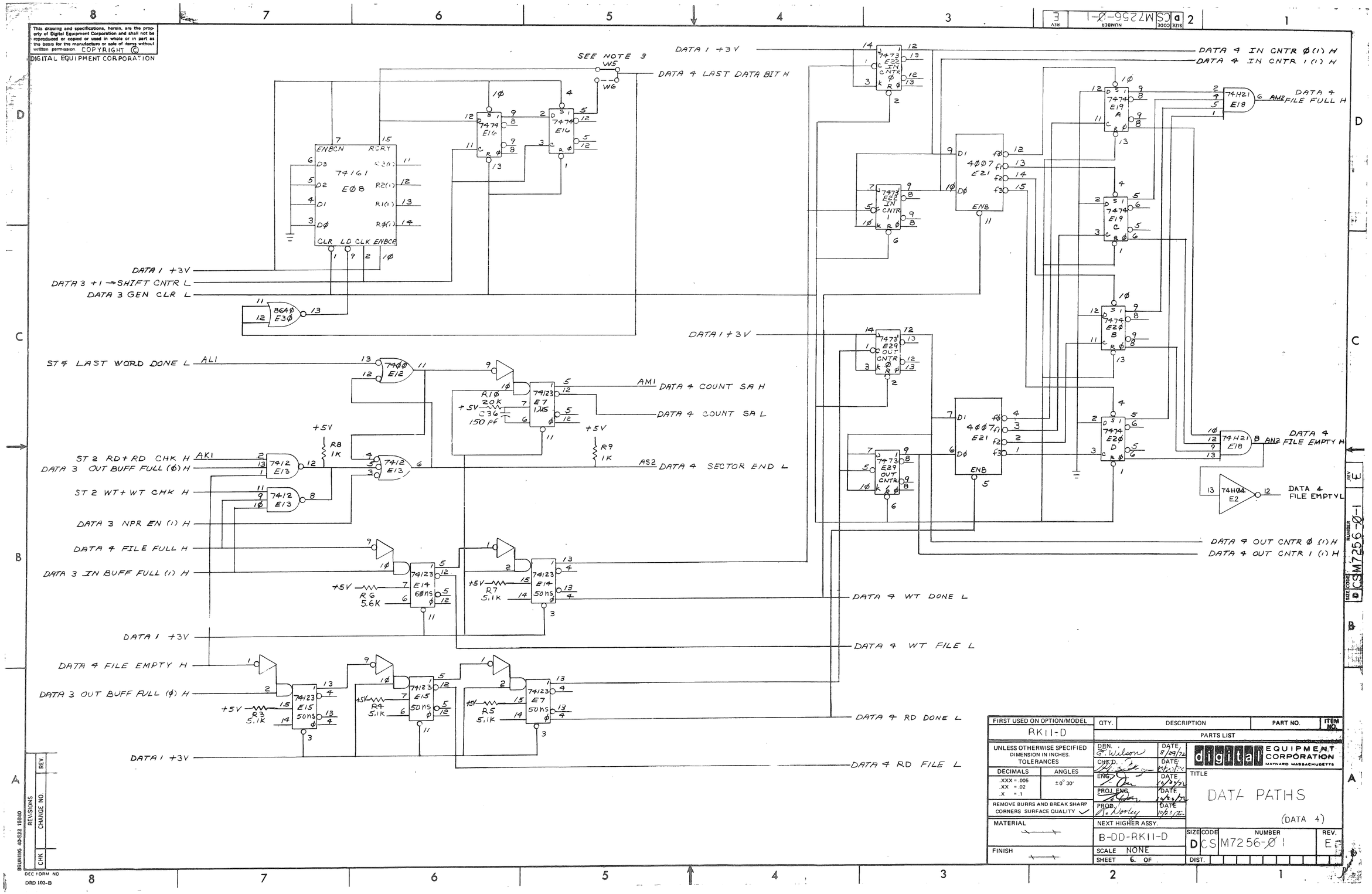

FIRST USED ON OPTION/MODEL	QTY.	DESCRIPTION	PART NO.	ITEM NO.
RK11-D		PARTS LIST		

UNLESS OTHERWISE SPECIFIED DIMENSION IN INCHES. TOLERANCES

DECIMALS	ANGLES
.XXX = .005 .XX = .02 .X = .1	±0° 30'

REMOVE BURRS AND BREAK SHARP CORNERS SURFACE QUALITY ✓

MATERIAL —

FINISH —

DRN. G. Wilson	DATE 8/29/72	digital EQUIPMENT CORPORATION MAYNARD MASSACHUSETTS
CHK'D.	DATE	
ENG.	DATE	TITLE
PROJ. ENG.	DATE	DATA PATHS
PROD.	DATE	(DATA 4)

NEXT HIGHER ASSY. B-DD-RK11-D

SCALE NONE

SHEET 6 OF

SIZE	CODE	NUMBER	REV.
D	CS	M7256-01	E

DIST.

REV.	REVISIONS	CHANGE NO.	CHK

BRUNING 40-522 15B40

DEC FORM NO DRD 102-B

SIZE D CODE CS NUMBER M7256-01 REV E

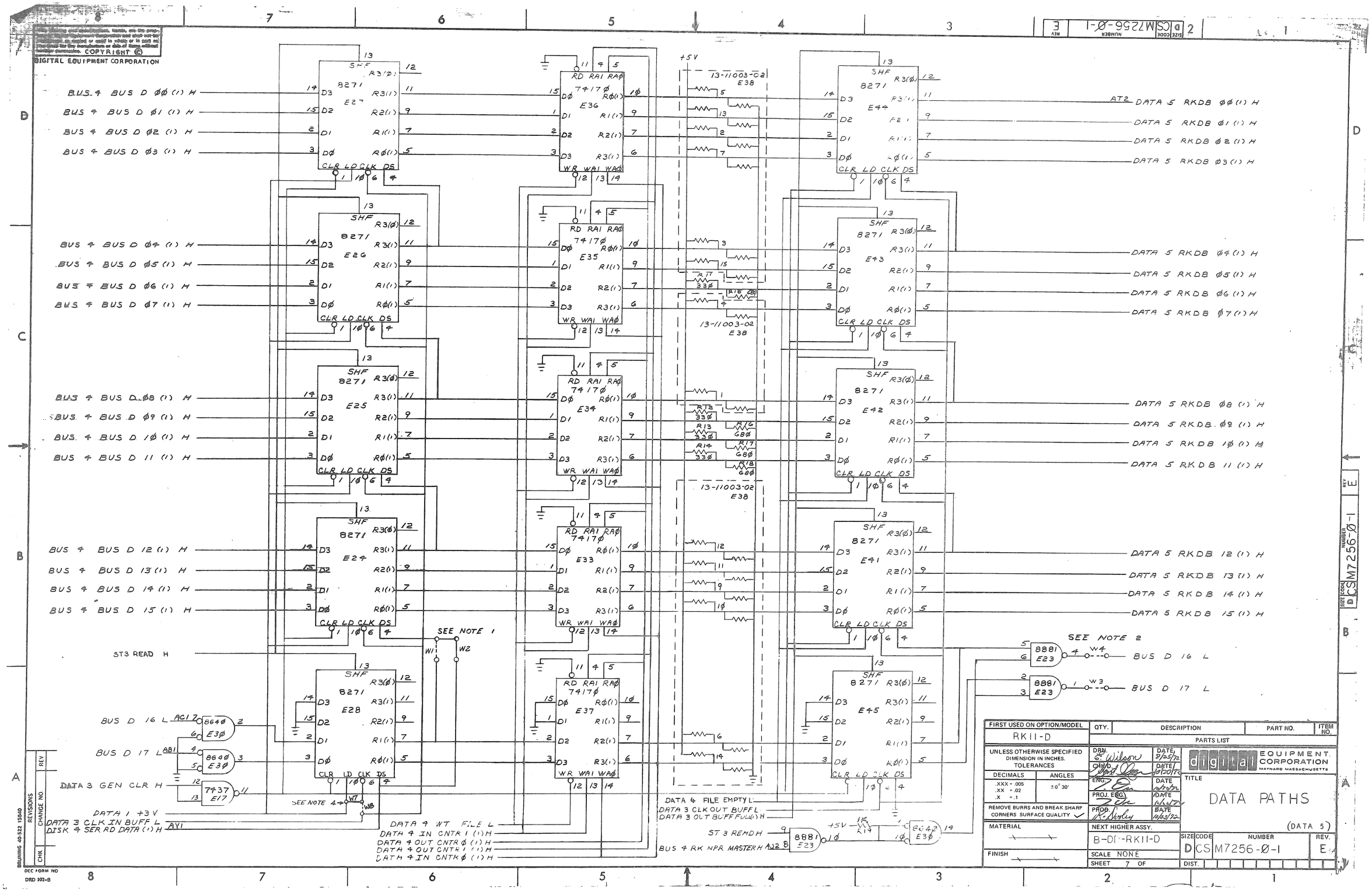

FIRST USED ON OPTION/MODEL	QTY.	DESCRIPTION	PART NO.	ITEM NO.
RK11-D		PARTS LIST		

UNLESS OTHERWISE SPECIFIED DIMENSION IN INCHES. TOLERANCES

DECIMALS	ANGLES
.XXX = .005	±0° 30'
.XX = .02	
.X = .1	

REMOVE BURRS AND BREAK SHARP CORNERS SURFACE QUALITY ✓

MATERIAL

FINISH

DRN. E. Wilson DATE 8/25/72
CHK'D DATE 10/20/72
ENG. DATE
PROJ. ENG. DATE
PROD. R. Morley DATE 10/23/72

digital EQUIPMENT CORPORATION MAYNARD MASSACHUSETTS

TITLE DATA PATHS (DATA 5)

NEXT HIGHER ASSY. B-DC-RK11-D

SCALE NONE

SHEET 7 OF

SIZE D CODE CS NUMBER M7256-Ø-1 REV. E

DIST.

REVISIONS: REV / CHANGE NO / CHK

BRUNING 40-522 15840

DEC FORM NO DRD 102-B

PAGE REVISION CONTROL SHEET

SH NO.	PAGE REVISIONS													REMARKS
1	A	B	C	D	E	F	H	J	K	L	M	N	P	
2	A	B	C	C	D	E	E	F	H	J	K	L	M	
3	A	A	B	B	B	B	B	C	C	D	E	E	E	(BUS 1)
4	A	A	A	A	A	B	B	B	B	C	C	D	E	(BUS 2)
5	A	B	B	C	D	D	D	D	E	F	H	H	H	(BUS 3)
6	A	A	A	A	A	A	A	B	B	C	D	D	D	(BUS 4)
ECO NO.	—	00001	00002	00003	00004	00005	646A	00007	00008	00009	00010	00011	00012	
ETCH REV.	B	B	B	B	B	B	B	B	B	C	C	C	C	
ENG.	—	T.O.	T.O.	RCC	T.O.	T.O.	T.O.	REE	REE	REE	REE	REE	R.C.	
DATE	—	12-[illegible]	2-6-73	5-23-73	11-13-73	4/9/74	2/11/74	8-6-74	10/24/74	10/20/74	4/16/75	12/1/75	14 JUL 76	

FIRST USED ON OPTION/MODEL

RK11-D

DRN.		DATE
CHK'D.		DATE
ENG.		DATE 9/20/72
PROJ. ENG.		DATE 10/20/72
PROD.	T. Dooley	DATE 10/23/72

digital EQUIPMENT CORPORATION
MAYNARD, MASSACHUSETTS

TITLE

BUS CONTROL

(RK11-D)

NEXT HIGHER ASSY.: B-DD-RK11-D

SCALE

SHEET 1 OF 6

SIZE	CODE	NUMBER	REV.
B	CS	M7257-Ø-1	P

DIST.

NOTES: 1. R19 AND R20 ARE OPTIONAL COMPONENTS DO NOT INSERT

2. W1, W3 THRU W8, W19, W22, W23, W25, W26 W28, ARE OPTIONAL JUMPERS. DO NOT INSERT.

* IF 8641'S ARE NOT AVAILABLE, USE 8838'S, PART NO. 1911117-06.

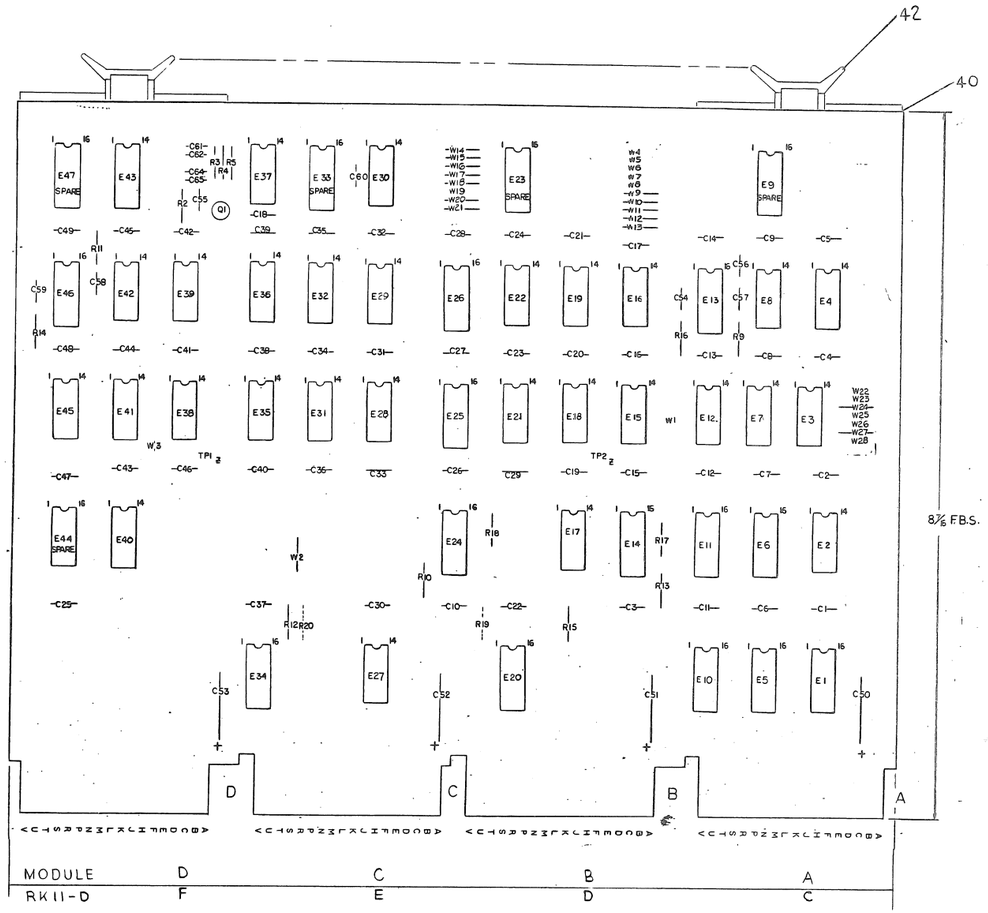

I.C. DEC 8640	1	8
IC DEC 74H103	11	4
IC DEC 314	1	8
IC DEC 7442	8	16
IC DEC 74123	8	16
IC DEC 74151	8	16
IC TYPE	GND	+ 5V

GND AND 5V ARE USUALLY PIN 7 AND 14 RESPECTIVELY EXCEPTIONS ARE STATED ABOVE

IC PIN LOCATIONS

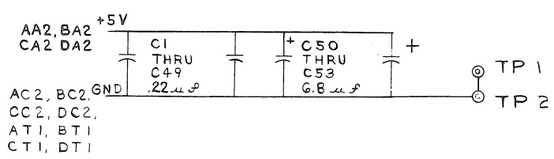

QTY	REF DESIGNATION	DESCRIPTION	PART NO.	ITEM NO.
REF		X-Y CORDINATE HOLE LOC.	K-CO-M7257-0-4	1
REF		ASSY/DRILLING HOLE LAYOUT	D-AH-M7257-0-5	2
REF		MODULE ECO HISTORY	B-MH-M7257-0-6	3
1		ETCHED CIRCUT BOARD	5009990	4
2	C58, C59	CAP 10 MMF 100V 5%	1000006	5
1	C54	CAP 270 MMF 100V 5%	1000022	6
2	C57, C60	CAP 330 MMF 100V 5%	1000023	7
1	C56	CAP 1200 MMF 100V 5%	1002424	8
49	C1 THRU C49	CAP .22 MF 50V 20%	1010274-01	9
4	C50 THRU C53	CAP 6.8 MFD 35V 10% TANT	1005306	10
4	C61, C62, C64, C65	CAP 6.8 MMF 100V 5%	1000005	11
1	C55	CAP 27 MMF 100V 5%	1001739	12
1	Q1	TRANS DEC 3009B	1503100	13
3	R2, R3, R4,	RES. 330 1/4 W 5%	1300295	14
2	R10, R13	RES. 390 1/4 W 5%	1300309	15
1	R5	RES. 287 1/8 W, 1%	1305124	16
4	R12, R15, R17, R18	RES. 180 1/4 W 5%	1301322	17
1	R16	RES. 5.6K 1/4 W 5%	1301874	18
1	R9	RES. 4.7K 1/4 W 5%	1302177	19
2	R11, R14	RES. 5.11K 1/8 W 1%	1304854	20
				21
2	E16, E30	RES. 1K RESISTOR PACK	1300005-01	22
1	E19	I.C. 74H20	1905635	23
2	E22, E38	I.C. 7402	1909004	24
3	E18, E31, E37	I.C. 74H00	1909056	25
4	E40, E41, E42, E35	I.C. 74H74	1909667	26
1	E2	I.C. 314	1909704	27
4	E3, E4, E8, E27	I.C. 8881	1909705	28
3	E7, E12, E15	I.C. 8242	1909712	29
1	E21	I.C. 74H04	1909931	30
1	E26	I.C. 74151	1909936	31
2	E24, E25	I.C. 7442	1910046	32
1	E28	I.C. 7437	1910091	33
3	E36, E39, E45	I.C. 7408	1910155	34
3	E29, E32, E43	I.C. 74H103	1910409	35
2	E13, E46	I.C. 74123	1910436	36
1	E17	I.C. 8640	1911469	37
* 8	E1, E5, E6, E10, E11, E14, E20, E34	I.C. 8641	1911579	38
15	W2, W9 THRU W18, W20, W21, W24, W27	INSULATED JUMPER	9009185	39
8		EYELET	9006732	40
2	TP1, TP2	SOLDER TERMINALS	9007791	41
4		HANDLE (FLIPCHIP) MAGENTA	9008337-06	42

PARTS LIST

FIRST USED ON OPTION MODEL: RK11-D

ETCH BOARD REV: C

CHANGE NO.	DEC NO.	EIA NO.	DEC NO.	EIA NO.

REVISIONS

SEMICONDUCTOR CONVERSION CHART

		DATE
DRN.	D. Lewis	10/19/72
CHK'D	R. Eklund	10/19/73
ENG.		11-19-73
PROJ. ENG.		11/16/73
PROD.		

NEXT HIGHER ASSY: B-DD-RK11-D

SCALE: NONE

SHEET 1 OF 6

digital EQUIPMENT CORPORATION MAYNARD MASSACHUSETTS

TITLE: BUS CONTROL RK11-D

SIZE	CODE	NUMBER	REV.
D	CS	M7257-0-1	M

DIST.

M7257-0-1 D CS M

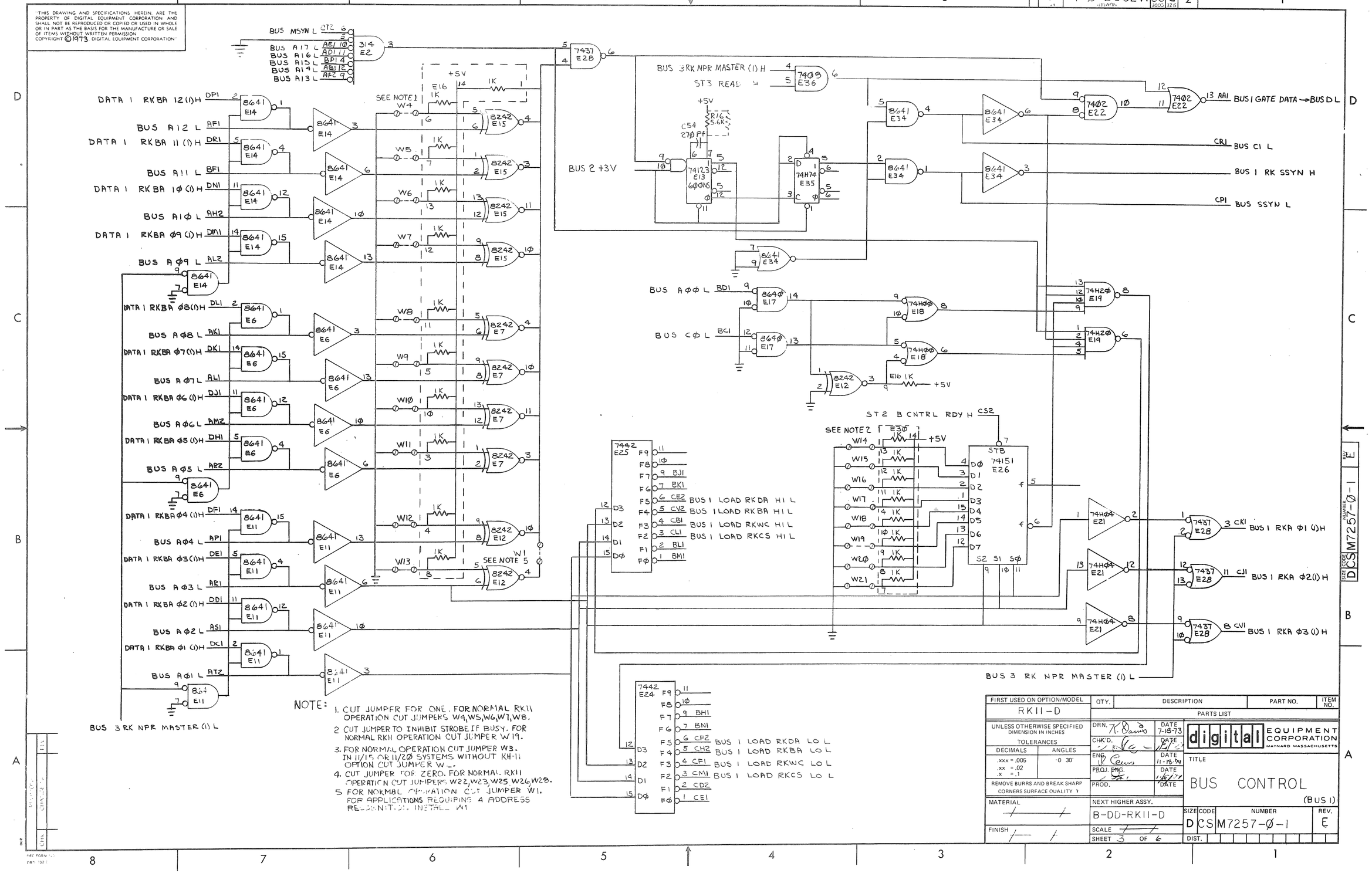

NOTE:

1. CUT JUMPER FOR ONE. FOR NORMAL RK11 OPERATION CUT JUMPERS W4, W5, W6, W7, W8.
2. CUT JUMPER TO INHIBIT STROBE IF BUSY. FOR NORMAL RK11 OPERATION CUT JUMPER W19.
3. FOR NORMAL OPERATION CUT JUMPER W3. IN 11/15 OR 11/20 SYSTEMS WITHOUT KH-11 OPTION CUT JUMPER W_.
4. CUT JUMPER FOR ZERO. FOR NORMAL RK11 OPERATION CUT JUMPERS W22, W23, W25, W26, W28.
5. FOR NORMAL OPERATION CUT JUMPER W1. FOR APPLICATIONS REQUIRING 4 ADDRESS RECOGNITION INSTALL W1

FIRST USED ON OPTION/MODEL	QTY.	DESCRIPTION	PART NO.	ITEM NO.
RK11-D		PARTS LIST		

UNLESS OTHERWISE SPECIFIED DIMENSION IN INCHES
TOLERANCES
DECIMALS .xxx = .005 .xx = .02 .x = .1
ANGLES ±0 30'
REMOVE BURRS AND BREAK SHARP CORNERS SURFACE QUALITY

MATERIAL
FINISH

DRN. T. Davis DATE 7-18-73
CHK'D. DATE
ENG. DATE 11-15-74
PROJ. ENG. DATE
PROD. DATE

NEXT HIGHER ASSY. B-DD-RK11-D
SCALE
SHEET 3 OF 6

digital EQUIPMENT CORPORATION MAYNARD MASSACHUSETTS

TITLE BUS CONTROL (BUS 1)

SIZE D CODE CS NUMBER M7257-Ø-1 REV. E
DIST.

SIZE CODE DCS NUMBER M7257-Ø-1 REV E

SET UP UNIBUS TIMING AS FOLLOWS:

1. TIMING ADJUSTMENTS ARE MADE BY REMOVING CAPACITORS C61 THRU C65 AS REQUIRED. WITH C61 THRU C65 ALL INSTALLED THE OUTPUT AT E37Ø3 HAS A PERIOD OF ≈ 88 NSEC. REMOVAL OF EACH CAP DECREASES THIS BY ≈ 5 NSEC.
2. MAKE THE FOLLOWING MEASUREMENT AND ADJUSTMENT WHILE DOING A DISK WRITE.
   a. SYNC EXTERNALLY ON RK NPR MASTER(I)H
   b. MEASURE FROM BUS BBSY L TO BUS MSYN L. DELETE CAPACITORS AS REQUIRED TO MAKE THIS TIME EQUAL TO 150 NSEC MINIMUM.
3. TO VERIFY PROPER TIMING MAKE THE FOLLOWING MEASUREMENTS:
   a. WHILE DOING A DISK WRITE, SYNC EXTERNALLY ON END SYNC(I)H
   b. MEASURE FROM BUS SSYN L TO DATA STR 2 L EQUAL TO 75 NSEC MIN.
   c. MEASURE FROM BUS MSYN L TO Ø→NPR H EQUAL TO 75 NSEC MIN.
   d. WHILE DOING A DISK READ, SYNC EXTERNALLY ON END SYNC(I)H
   e. MEASURE FROM BUS MSYN L TO Ø→NPR H EQUAL TO 75 NSEC MIN.
4. IF ANY TIMES MEASURED IN PART 3 ABOVE ARE LESS THAN 75 NSEC ADD ONE 6.8 CAP
5. IF ANY COMPONENT IN THE TIMING CIRCUIT IS REPLACED, MEASUREMENTS MUST BE RETAKEN AND CAPACITORS ADDED OR REMOVED AS REQUIRED.

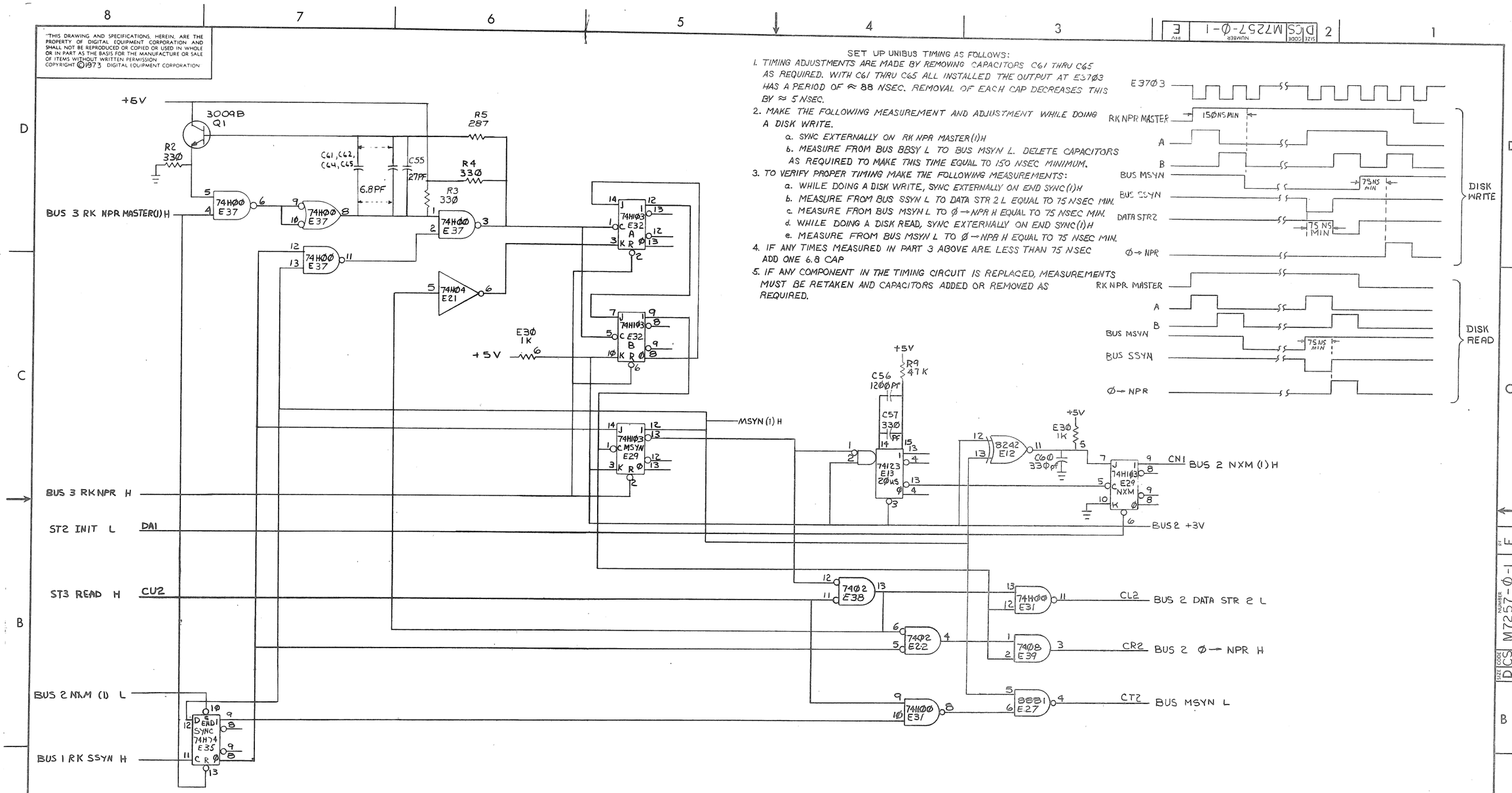

FIRST USED ON OPTION/MODEL	QTY.	DESCRIPTION	PART NO.	ITEM NO.
RK11-D		PARTS LIST		

UNLESS OTHERWISE SPECIFIED DIMENSION IN INCHES
TOLERANCES
DECIMALS: .xxx = .005, .xx = .02, .x = .1
ANGLES: ±0° 30'
REMOVE BURRS AND BREAK SHARP CORNERS SURFACE QUALITY √
MATERIAL
FINISH

DRN. DATE 7/10/73
CHK'D. DATE 7/10/73
ENGR. DATE 11-18-74
PROJ. ENG. DATE
PROD. DATE

digital EQUIPMENT CORPORATION MAYNARD MASSACHUSETTS

TITLE BUS CONTROL (BUS 2)

NEXT HIGHER ASSY. B-DD-RK11-D
SCALE
SHEET 4 OF 6

SIZE	CODE	NUMBER	REV.
D	CS	M7257-Ø-1	E

DIST.

REVISIONS: REV | CHANGE NO. | CHK

DEC FORM 140 DRD 102-C

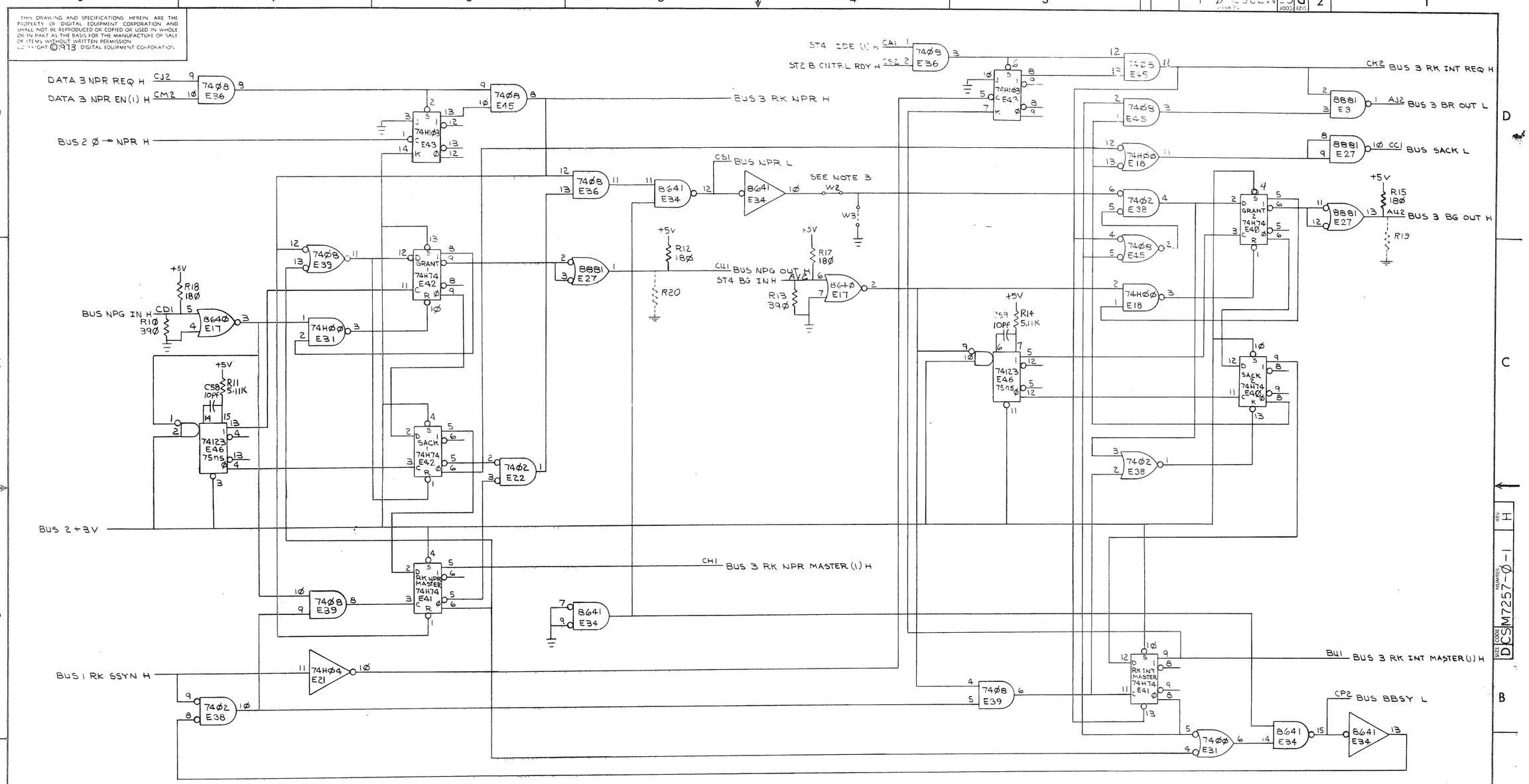

FIRST USED ON OPTION MODEL	QTY.	DESCRIPTION	PART NO.	ITEM NO.
RK11-D		PARTS LIST		

UNLESS OTHERWISE SPECIFIED DIMENSION IN INCHES
TOLERANCES
DECIMALS .xxx = .005 .xx = .02 .x = .1
ANGLES 0 30
REMOVE BURRS AND BREAK SHARP CORNERS SURFACE QUALITY

MATERIAL
FINISH

DRN. DATE 7/27/73
CHK'D. DATE
ENG. DATE 11-12-74
PROJ. ENG. DATE
PROD. DATE

digital EQUIPMENT CORPORATION MAYNARD MASSACHUSETTS

TITLE
BUS CONTROL
(BUS 3)

NEXT HIGHER ASSY. B-DD-RK11-D
SCALE
SHEET 5 OF 6

SIZE	CODE	NUMBER	REV.
D	CS	M7257-Ø-1	H

DIST.

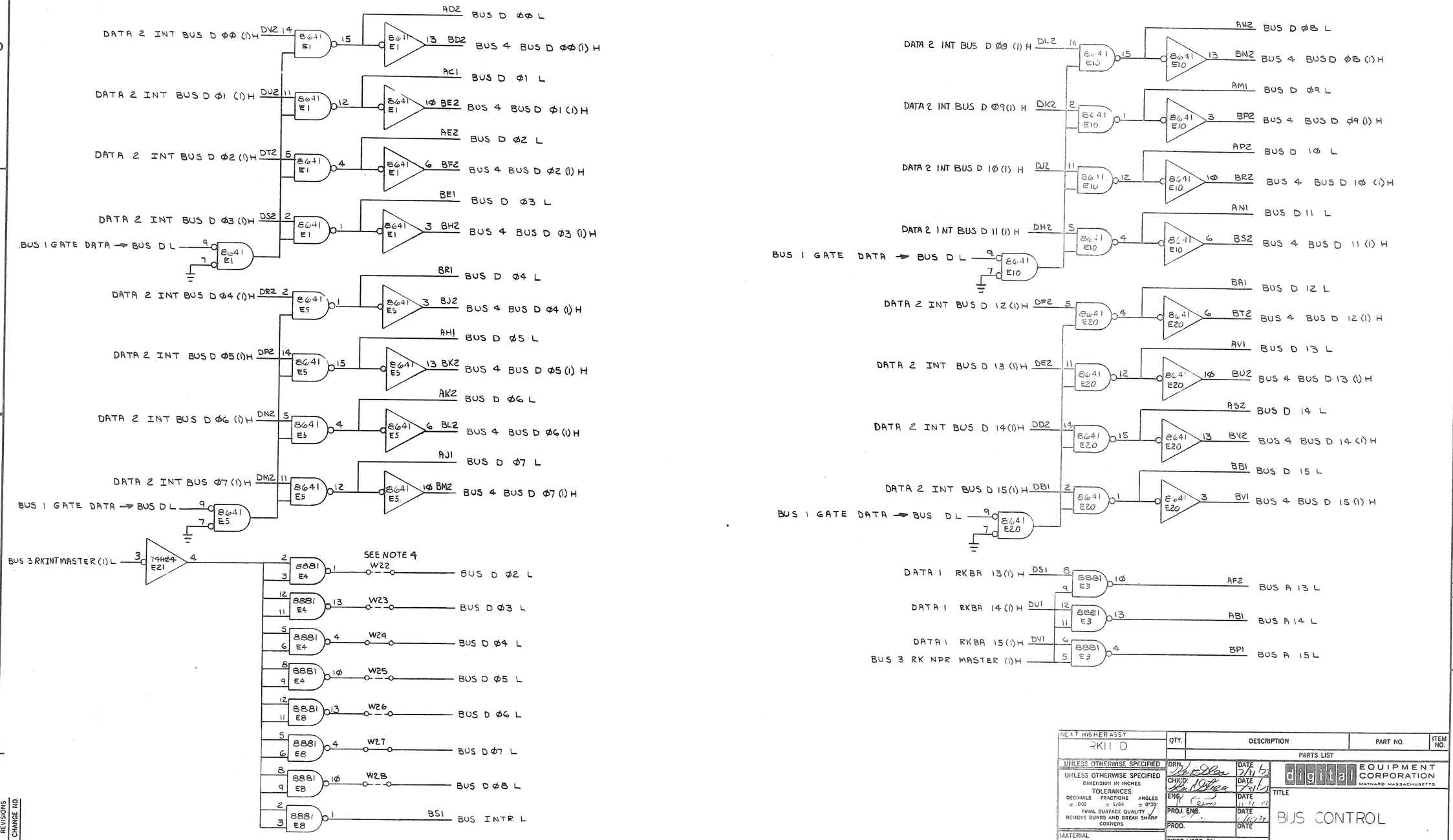

QTY.	DESCRIPTION	PART NO.	ITEM NO.

PARTS LIST

NEXT HIGHER ASSY: RK11 D

UNLESS OTHERWISE SPECIFIED

UNLESS OTHERWISE SPECIFIED
DIMENSION IN INCHES
TOLERANCES
DECIMALS ± .005 FRACTIONS ± 1/64 ANGLES ± 0°30'
FINAL SURFACE QUALITY
REMOVE BURRS AND BREAK SHARP CORNERS

MATERIAL

FINISH

DRN. DATE 7/31/73
CHK'D. DATE 7/31/73
ENG. DATE 11-16-71
PROJ. ENG. DATE 1/22/74
PROD. DATE

FIRST USED ON B-DD-RK11 D-0

SCALE
SHEET OF

digital EQUIPMENT CORPORATION MAYNARD, MASSACHUSETTS

TITLE BUS CONTROL (BUS 4)

SIZE	CODE	NUMBER	REV.
D	CS	M7257-Ø-1	D

DIST.

REVISIONS
CHANGE NO
CHK

DEC FORM NO. DRD 102A

PAGE REVISION CONTROL SHEET

SH NO.	PAGE REVISIONS				REMARKS
1	*	A	B	C	
2	*	*	*	*	
3	*	A	B	C	
4	*	A	A	A	
ECO NO.	—	RK11D-00003	RK11D-00005	RK11D-00[illegible]	
ETCH REV.	—	—	—	—	
ENG.	—	T.O.	T.O.	[illegible]	
DATE	—	11/72	4/73	9/73	FIRST USED ON OPTION/MODEL: RK11-D

DRN.	G. Monetti	DATE 10-23-72
CHK'D.	[illegible]	DATE 11/1/72
ENG.	[illegible]	DATE 11/1/72
PROJ. ENG.	[illegible]	DATE 11/1/72
PROD.	R. Cooley	DATE 11/2/72

digital EQUIPMENT CORPORATION
MAYNARD MASSACHUSETTS

TITLE
RK11-D
BACK PANEL

NEXT HIGHER ASSY.	SIZE	CODE	NUMBER	REV.
8-DD-RK11-D	B	IC	RK11-D-3	C
SCALE —				
SHEET 1 OF 4	DIST.			

FIRST USED ON OPTION/MODEL	QTY.	DESCRIPTION	PART NO.	ITEM NO.
		PARTS LIST		

UNLESS OTHERWISE SPECIFIED
DIMENSION IN INCHES
TOLERANCES

DECIMALS	ANGLES
XXX ± .005 XX ± .02 X ± .1	±0 30'

REMOVE BURRS AND BREAK SHARP CORNERS SURFACE QUALITY ✓

MATERIAL

FINISH

		DATE
DRN		
CHK'D		
ENG		
PROJ. ENG		
PROD		

NEXT HIGHER ASSY.

SCALE

SHEET OF

digital EQUIPMENT CORPORATION
MAYNARD MASSACHUSETTS

TITLE
RK11-D
BACKPANEL

SIZE	CODE	NUMBER	REV.
D	IC	RK11-D-3	

DIST.

REV	CHANGE NO	CHK
	REVISIONS	

DRD 102-B

C1		C2		C3		C4	
GND	A1	BUS 1 GATE DATA→BUS D L	A1		A1		A1
BUS DC LO L	B1	DR BUS CYL ADD 8 L	B1	BUS D 17 L	B1	BUS A 14 L	B1
BUS INIT L	C1	DR BUS CYL ADD 3 L	C1	BUS D 16 L	C1	BUS D Ø1 L	C1
BUS A 16 L	D1	DR BUS CYL ADD 1 L	D1		D1	BUS A 16 L	D1
BUS A 17 L	E1	DR BUS CYL ADD 6 L	E1		E1	BUS A 17 L	E1
DATA 3 FILE DONE H	F1	DR BUS CYL ADD 4 L	F1	DATA 3 FILE DONE H	F1	BUS A 11 L	F1
ST2 STOP NPRS L	H1	DR BUS CYL ADD 7 L	H1	ST2 STOP NPRS L	H1	BUS D Ø5 L	H1
ST2 WC OVF(1)H	J1	DR BUS CYL ADD 5 L	J1	ST2 WC OVF(1)H	J1	BUS D Ø7 L	J1
ST2 RD+RD CHK H	K1	DR BUS CYL ADD Ø L	K1	ST2 RD+RD CHK H	K1	BUS A Ø0 L	K1
ST4 LAST WORD DONE L	L1	DR BUS CYL ADD 2 L	L1	ST4 LAST WORD DONE L	L1	BUS A Ø7 L	L1
DATA 4 COUNT SA H	M1	DR BUS RESTORE L	M1	DATA 4 COUNT SA H	M1	BUS D Ø9 L	M1
ST4 FMT(1)H	N1		N1		N1	BUS D 11 L	N1
ST3 WT+WT CHK H	P1		P1		P1	BUS A Ø4 L	P1
ST2 NEW FUN L	R1		R1		R1	BUS A Ø3 L	R1
ST2 DATA (1)H	S1		S1		S1	BUS A Ø2 L	S1
GND	T1		T1	ST3 HEADER(1)H	T1	BUS D EH H	T1
ST3 HEADER(1)H	U1		U1		U1	BUS D 13 L	U1
DISK 4 SER RD DATA(1)H	V1		V1		V1		V1
+ 5V	A2		A2		A2		A2
DR BUS DC LO L	B2		B2		B2		B2
GND	C2		C2		C2		C2
BR 7 L	D2		D2		D2	BUS D ØØ L	D2
BR 6 L	E2		E2		E2	BUS D Ø2 L	E2
BR 5 L	F2	DR BUS WT DATA+CLK L	F2		F2	BUS A 13 L	F2
BR 4 L	H2	DR BUS R/W/S RDY L	H2		H2	BUS A 1Ø L	H2
BUS 3 BR OUT L	J2	DR BUS SEL DR Ø L	J2	BUS 4 RK NPR MASTER H	J2	BUS 3 BR OUT L	J2
BG 7 IN H	K2	DR BUS SEL DR 1 L	K2	DATA 3 IN BUFF FULL (1) H	K2	BUS D Ø6 L	K2
BG 7 OUT H	L2	DR BUS SEL DR 2 L	L2	DATA 3 OUT BUFF FULL(1) H	L2	BUS A Ø9 L	L2
BG 6 IN H	M2		M2	DATA 4 FILE FULL H	M2	BUS A Ø6 L	M2
BG 6 OUT H	N2	ST4 CLK H	N2	DATA 4 FILE EMPTY H	N2	BUS D Ø8 L	N2
BG 5 IN H	P2		P2	ST2 GEN CLR L	P2	BUS D 1Ø L	P2
BG 5 OUT H	R2	DATA 3 CYL OVF L	R2		R2	BUS A Ø5 L	R2
BG 4 IN H	S2	DATA 4 SECTOR END L	S2		S2	BUS D 14 L	S2
BG 4 OUT H	T2	DATA 5 RKDB ØØ(1)H	T2		T2	BUS A Ø1 L	T2
BUS 3 BG OUT H	U2	DISK 2 LAST SECTOR L	U2		U2	BUS 3 BG OUT H	U2
ST4 BG IN H	V2		V2	DATA 3 NPR EN(1)H	V2	ST4 BG IN H	V2

D1		D2		D3		D4	
ST1 INT BUS A ØØ(1)H		DR BUS SEC CNTR (1) L		ST1 INT BUS A ØØ(1)H		BUS D 12 L	
ST1 INT BUS A Ø1(1)H	A1	DR BUS ADD ACK L	A1	ST1 INT BUS A Ø1(1)H	A1	BUS D 15 L	A1
ST1 INT BUS A Ø2(1)H	B1	DR BUS SIN L	B1	ST1 INT BUS A Ø2(1)H	B1	BUS C Ø L	B1
ST1 INT BUS A Ø3(1)H	C1	DR BUS LOG ADD INT L	C1	ST1 INT BUS A Ø3(1)H	C1	BUS A ØØ L	C1
ST1 INT BUS A Ø4(1)H	D1		D1	ST1 INT BUS A Ø4(1)H	D1	BUS D Ø3 L	D1
ST1 INT BUS A Ø5(1)H	E1	BUS AC LO L	E1	ST1 INT BUS A Ø5(1)H	E1	BUS A 12 L	E1
ST1 INT BUS A Ø6(1)H	F1	DR BUS STROBE L	F1	ST1 INT BUS A Ø6(1)H	F1		F1
ST1 INT BUS A Ø7(1)H	H1	DR BUS SEC CNTR 3 L	H1	ST1 INT BUS A Ø7(1)H	H1		H1
ST1 INT BUS A Ø8(1)H	J1	DR BUS WT CHK L	J1	ST1 INT BUS A Ø8(1)H	J1		J1
ST1 INT BUS A Ø9(1)H	K1	DR BUS SEC CNTR Ø L	K1	ST1 INT BUS A Ø9(1)H	K1		K1
ST1 INT BUS A 1Ø(1)H	L1	DR BUS INDX PLS L	L1	ST1 INT BUS A 1Ø(1)H	L1		L1
ST1 INT BUS A 11(1)H	M1	DR BUS DRY L	M1	ST1 INT BUS A 11(1)H	M1		M1
ST1 INT BUS A 12(1)H	N1	DR BUS WT PRCT STATUS L	N1	ST1 INT BUS A 12(1)H	N1		N1
ST1 INT BUS A 13(1)H	P1	DR BUS RD GATE L	P1	ST1 INT BUS A 13(1)H	P1	BUS A 15 L	P1
ST1 INT BUS A 14(1)H	R1	DR BUS RD CLK L	R1	ST1 INT BUS A 14(1)H	R1	BUS D Ø4 L	R1
GND	S1		S1		S1	BUS INTR L	S1
ST1 INT BUS A 15(1)H	T1	BUS 3 RK INT MASTER H	T1	ST1 INT BUS A 15(1)H	T1	BUS 3 RK INT MASTER H	T1
BUS 4 BUS D 15(1)H	U1	DISK 1 POLL H	U1	BUS 4 BUS D 15(1)H	U1		U1
+ 5V	V1		V1		V1		V1
	A2		A2		A2		A2
GND	B2		B2		B2		B2
BUS 4 BUS D ØØ(1)H	C2	M CLK L	C2	BUS 4 BUS D ØØ(1)H	C2		C2
BUS 4 BUS D Ø1(1)H	D2		D2	BUS 4 BUS D Ø1(1)H	D2		D2
BUS 4 BUS D Ø2(1)H	E2	DR BUS DC LO L	E2	BUS 4 BUS D Ø2(1)H	E2		E2
BUS 4 BUS D Ø3(1)H	F2		F2	BUS 4 BUS D Ø3(1)H	F2		F2
BUS 4 BUS D Ø4(1)H	H2		H2	BUS 4 BUS D Ø4(1)H	H2		H2
BUS 4 BUS D Ø5(1)H	J2	DR BUS SEC CNTR 2L	J2	BUS 4 BUS D Ø5(1)H	J2		J2
BUS 4 BUS D Ø6(1)H	K2	DR BUS WT GATE L	K2	BUS 4 BUS D Ø6(1)H	K2		K2
BUS 4 BUS D Ø7(1)H	L2	DR BUS SEL UPPER HD L	L2	BUS 4 BUS D Ø7(1)H	L2		L2
BUS 4 BUS D Ø8(1)H	M2	DR BUS SEC PULSE L	M2	BUS 4 BUS D Ø8(1)H	M2		M2
BUS 4 BUS D Ø9(1)H	N2	DR BUS RKØ5 L	N2	BUS 4 BUS D Ø9(1)H	N2		N2
BUS 4 BUS D 1Ø(1)H	P2	DR BUS WT PROTECT L	P2	BUS 4 BUS D 1Ø(1)H	P2		P2
BUS 4 BUS D 11(1)H	R2	DR BUS RD DATA L	R2	BUS 4 BUS D 11(1)H	R2		R2
BUS 4 BUS D 12(1)H	S2	DISK 4 RD GATE (1) H	S2	BUS 4 BUS D 12(1)H	S2		S2
BUS 4 BUS D 13(1)H	T2		T2	BUS 4 BUS D 13(1)H	T2		T2
BUS 4 BUS D 14(1)H	U2	ST4 IDE (1) H	U2	BUS 4 BUS D 14(1)H	U2		U2
	V2		V2		V2		V2

FINISH

MATERIAL

UNLESS OTHERWISE SPECIFIED DIMENSIONS ARE IN INCHES TOLERANCES DECIMALS ± .XX .005 ± .XXX .010 ANGLES ± 30'

REMOVE BURRS AND BREAK SHARP CORNERS SURFACE QUALITY ✓

FIRST USED ON

QTY	DESCRIPTION	PART NO.	ITEM NO.
	PARTS LIST		

DRN. DATE
CHK'D DATE
ENG DATE
PROJ. ENG DATE
PROD DATE

NEXT HIGHER ASSY.

SCALE
SHEET OF

DIST.

SIZE CODE D NUMBER IC RKII-D-3 REV C

TITLE RKII-D PACKPANEL

digital EQUIPMENT CORPORATION MAYNARD, MASSACHUSETTS

SIZE CODE D NUMBER IC RKII-D-3 REV C

FIRST USED ON OPTION/MODEL	QTY.	DESCRIPTION	PART NO.	ITEM NO.
		PARTS LIST		

UNLESS OTHERWISE SPECIFIED DIMENSION IN INCHES. TOLERANCES

DECIMALS	ANGLES
XXX ± .005 XX ± .02 X ± .1	±0° 30'

REMOVE BURRS AND BREAK SHARP CORNERS SURFACE QUALITY ✓

MATERIAL

FINISH

DRN. DATE
CHK'D DATE
ENG. DATE
PROJ. ENG. DATE
PROD. DATE

NEXT HIGHER ASSY.

SCALE
SHEET OF

digital EQUIPMENT CORPORATION MAYNARD MASSACHUSETTS

TITLE RK11-D BACKPANEL

SIZE	CODE	NUMBER	REV.
D	IC	RK11-D-3	A

DIST

CHK	CHANGE NO	REV
	REVISIONS	

BRUNING 40 522 15840

DRD 102-B

REVISIONS		
CHK	CHANGE NO.	REV.

DESIGNATES PARALLEL TRANSFER
DESIGNATES SERIAL TRANSFER

RK11-D, E DATA PATHS

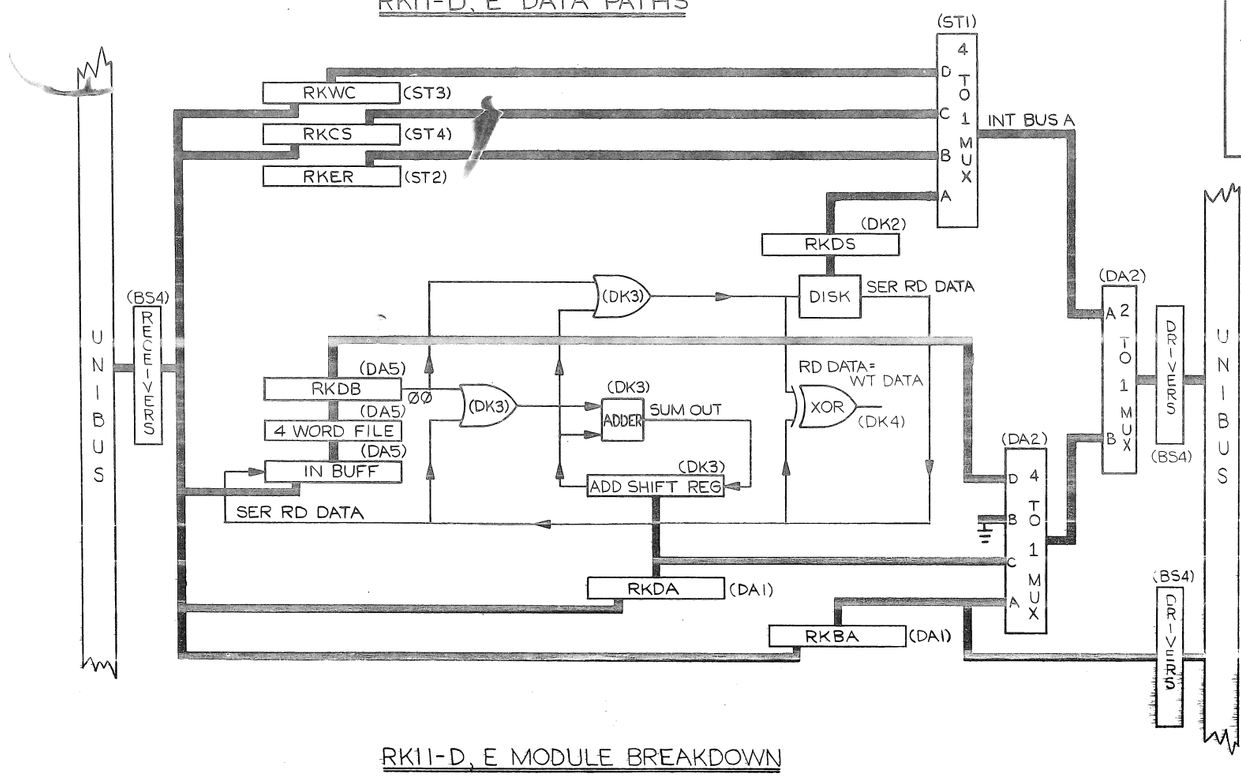

RK11-D, E MODULE BREAKDOWN

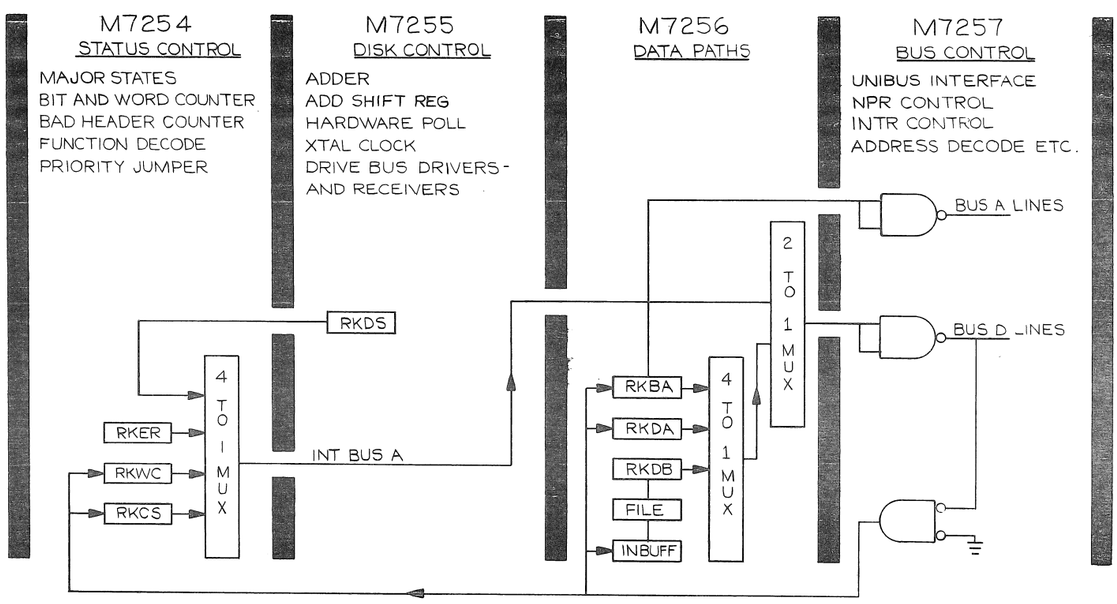

FLOW DRAWING EXAMPLE

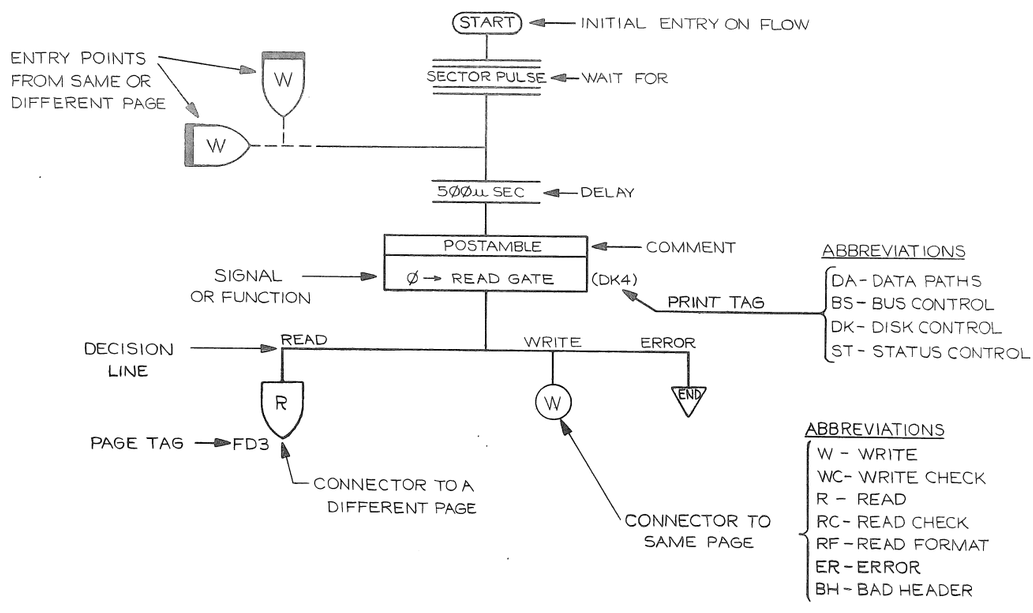

FD 1

FIRST USED ON OPTION/MODEL	
DIMENSIONAL TOLERANCE	RK11-D
DIMENSIONS ARE MILLIMETERS / INCHES UNLESS OTHERWISE SPECIFIED	DRN. DATE 2-20-74
MILLIMETERS X.XX ±0.010, .XX ±0.05, .X ±0.1	CHK. DATE 3-13-74
INCHES .XXX ±.005, .XX ±.02, .X ±.1	ENG. DATE
ANGLES ±0°30'	PROJ. MGR. DATE
REMOVE BURRS AND BREAK SHARP CORNERS SURFACE QUALITY ✓	PROD. MGR. DATE
THIRD ANGLE PROJECTION	NEXT HIGHER ASSY. B-DD-RK11-D
MATERIAL	
FINISH	
SCALE	SHEET 1 OF 5
DIST.	

QTY. | DESCRIPTION | PART NO. | ITEM NO.

PARTS LIST

digital

TITLE RK11-D, E FUNCTION FLOWS

SIZE/CODE D FD | NUMBER RK11-D-9 | REV.

SIZE/CODE D FD | NUMBER RK11-D-9 | REV.

GENERAL FLOW DRAWING

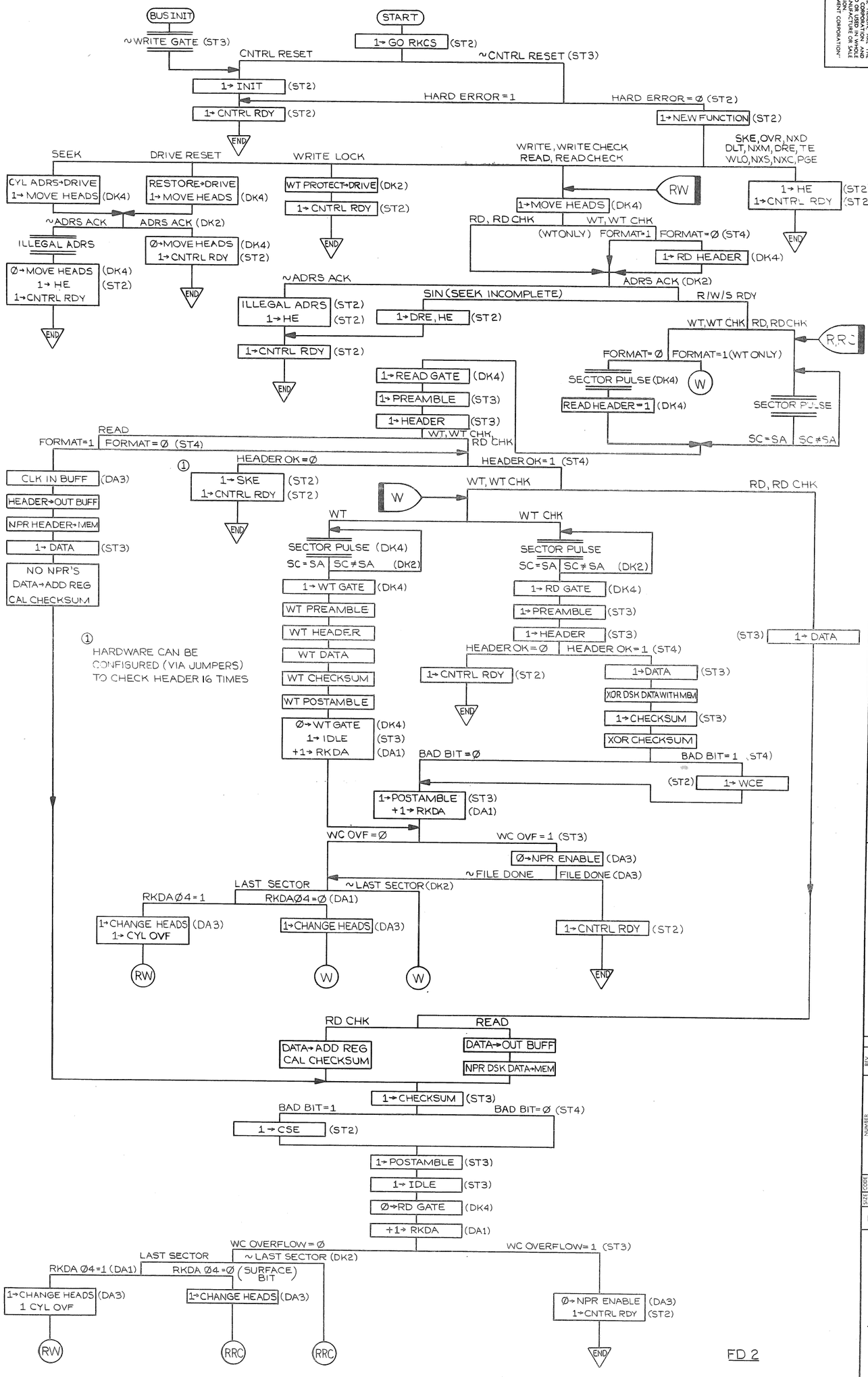

① HARDWARE CAN BE CONFIGURED (VIA JUMPERS) TO CHECK HEADER 16 TIMES

REVISIONS		
REV	CHANGE NO	CHK

TITLE: RK11-D-E FUNCTION FLOWS

SCALE | SHEET 2 OF 5 | SIZE CODE D FD | DIST. | NUMBER RK11-D-9 | REV.

SIZE D FD | NUMBER RK11-D-9 | REV.

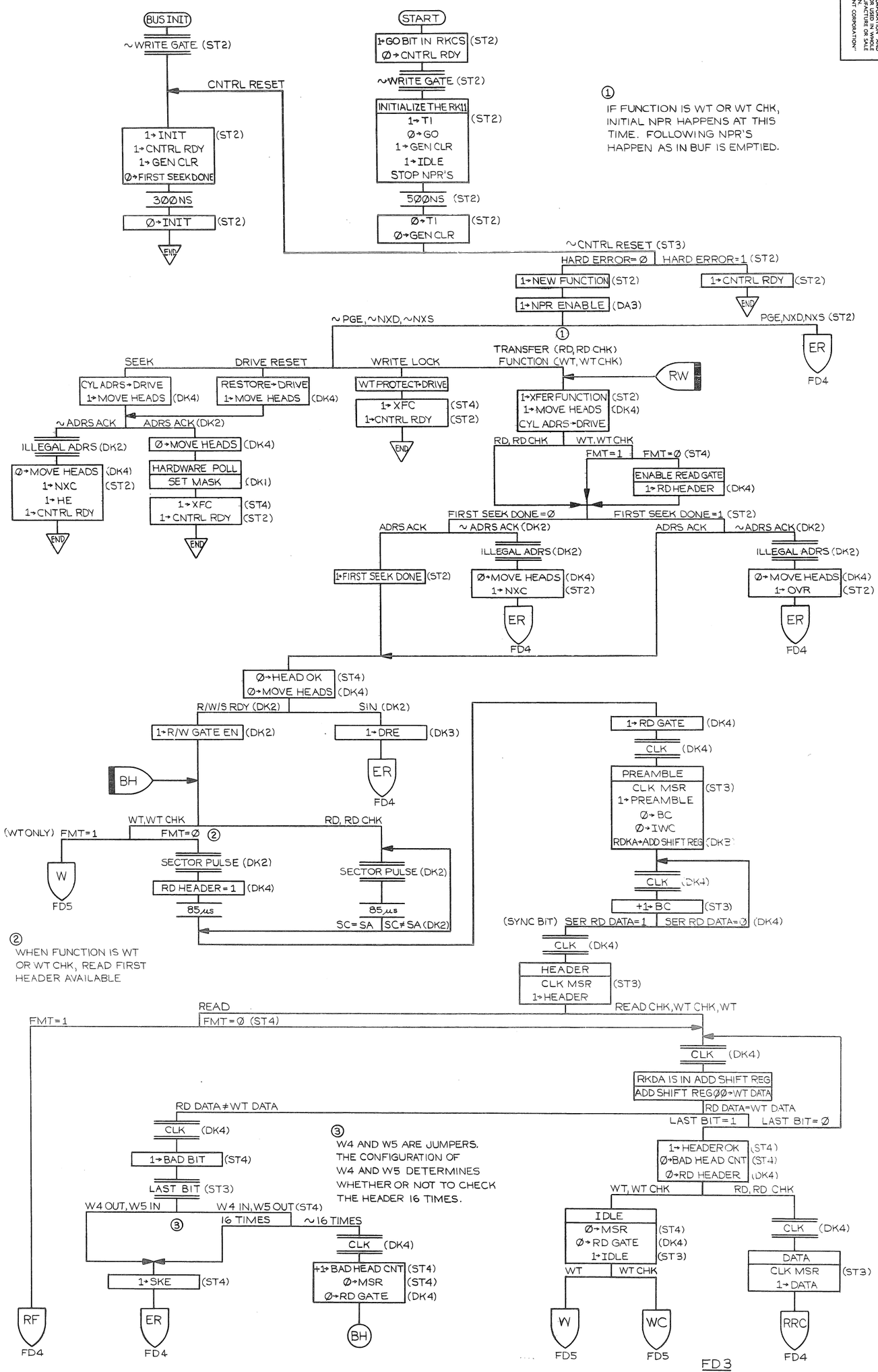

REVISIONS		
CHK	CHANGE NO	REV

TITLE: RK11-D,E FUNCTION FLOWS

SCALE | SHEET 3 OF 5 | SIZE D | CODE FD | DIST. | NUMBER RK11-D-9 | REV.

SIZE D | CODE FD | NUMBER RK11-D-9 | REV

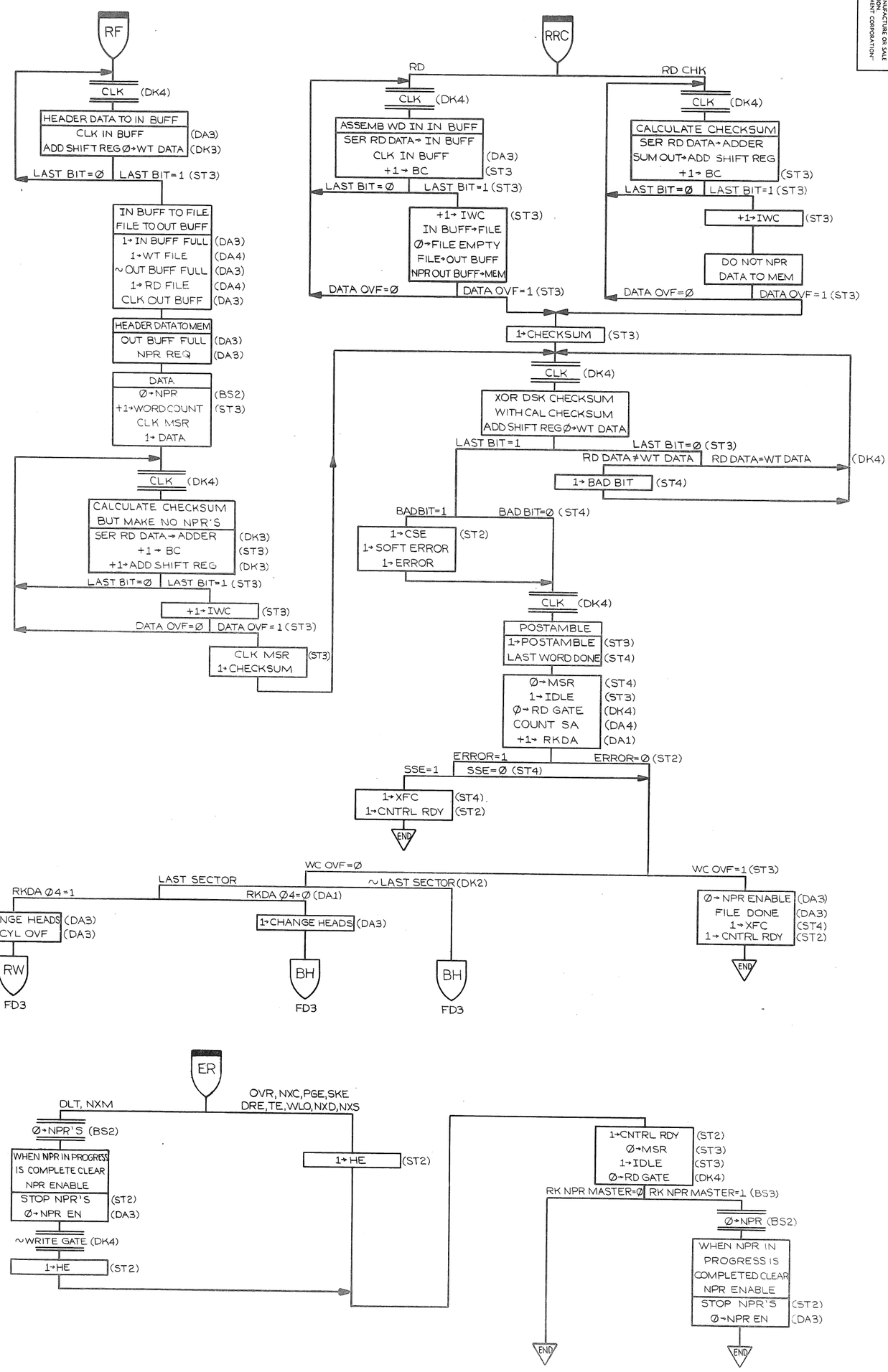

FD 4

REV.	CHANGE NO.	CHK
	REVISIONS	

TITLE: RK11-D-9 FUNCTION FLOWS

SCALE | SHEET 4 OF 5 | SIZE D | CODE FD | NUMBER RK11-D-9 | REV. | DIST.

DRAWN RK11-D-9 | SIZE D | CODE FD | NUMBER RK11-D-9 | REV

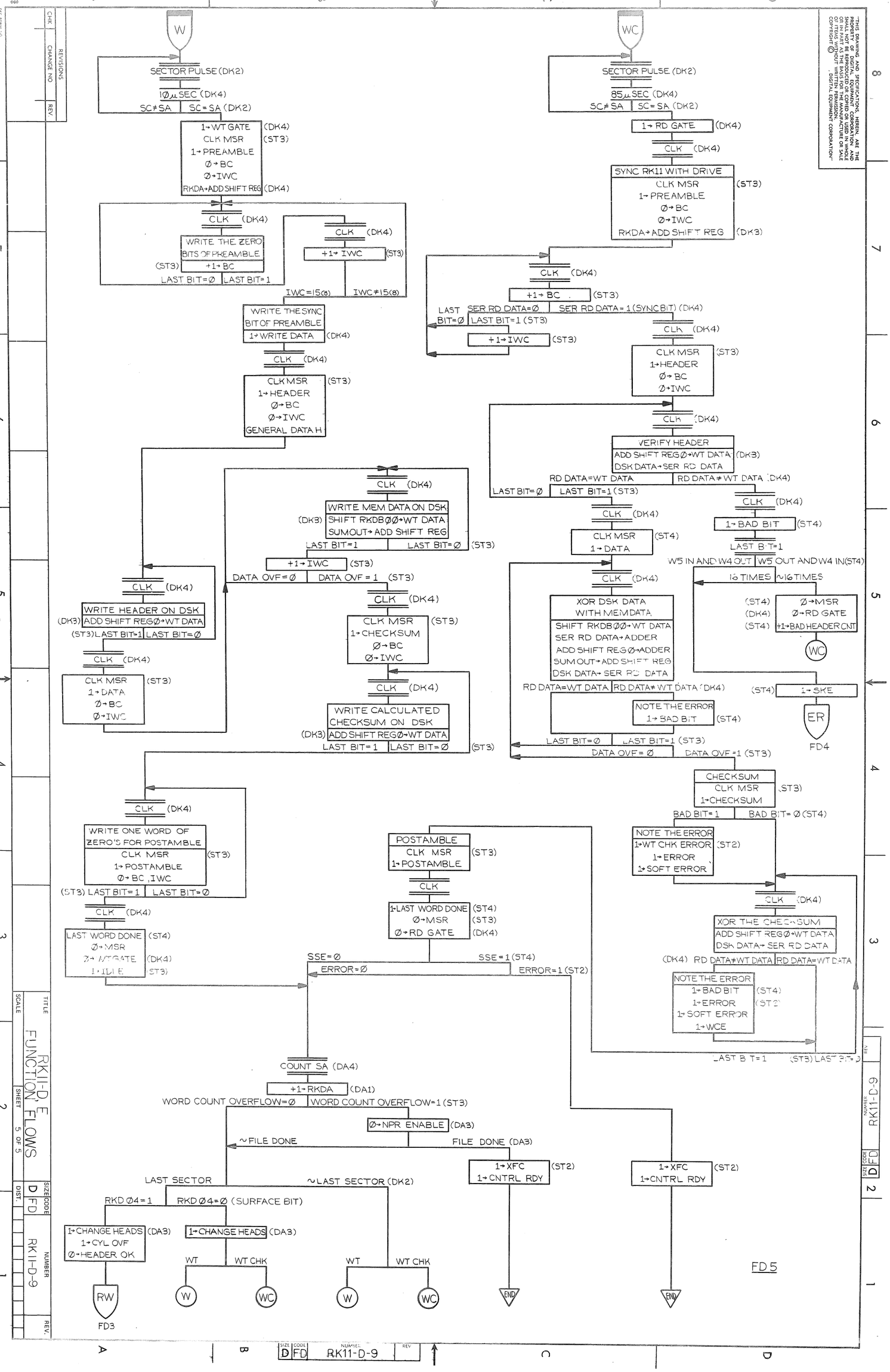

REVISIONS: CHK, CHANGE NO, REV.

TITLE: RK11-D, E FUNCTION FLOWS

SCALE | SHEET 5 OF 5 | SIZE D | CODE FD | DIST. | NUMBER RK11-D-9 | REV.

D FD RK11-D-9 REV

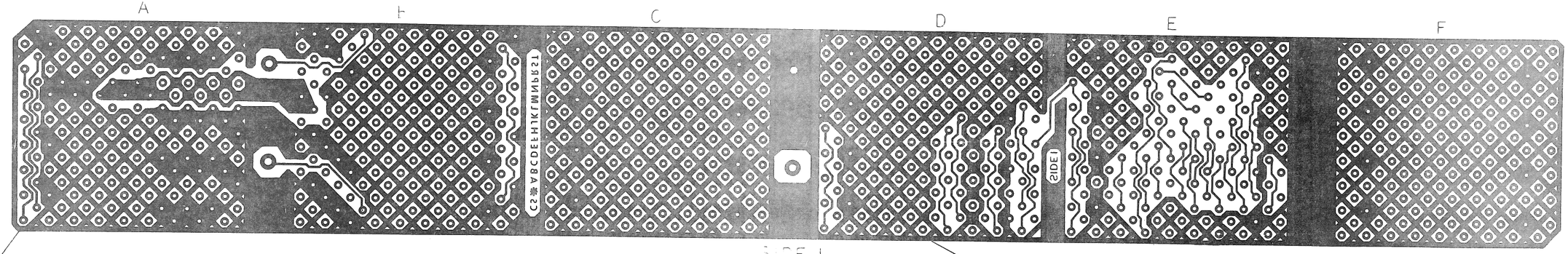

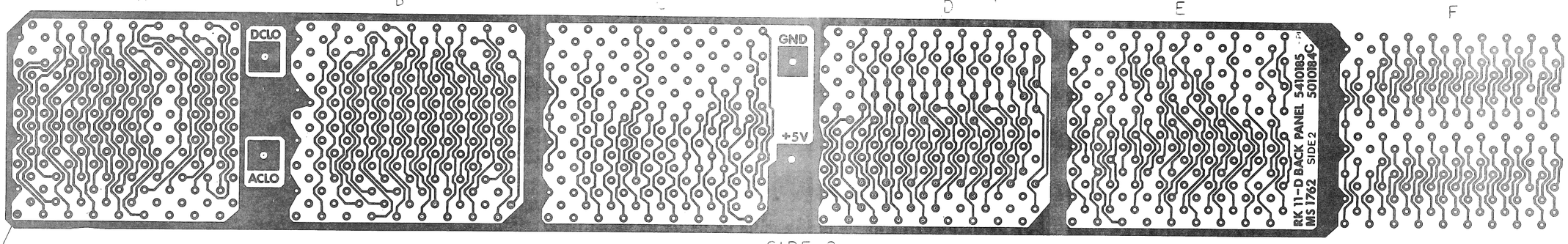

REV	CHANGE NO	CHK
A	[illegible]	[illegible]
B	[illegible]	[illegible]
C	[illegible]	[illegible]
D	[illegible]	[illegible]
E	MINOR	[illegible]

REVISIONS

ITEM NO.	PART NO.	DESCRIPTION	QTY.
6	A-WT-7009142-0	AWT REVISION STATUS	
5	K-WL-RK11-D-2	ETCH/WIRE LIST (RK11-D)	
4	5410109	ETCHED CIRCUIT BOARD	
3	B-MH-5410185-06	MODULE ECO HISTORY	
2	D-AH-5410185-0-5	ASSY/DRILLING HOLE LAYOUT	
1	K-CC-5410185-0-4	COORDINATE HOLE LOCATION	

PARTS LIST

FIRST USED ON OPTION/MODEL: RK11-D

ETCH REV: C

UNLESS OTHERWISE SPECIFIED DIMENSION IN INCHES. TOLERANCES

DECIMALS	ANGLES
.XXX = .005 .XX = .02 .X = .1	±0° 30'

REMOVE BURRS AND BREAK SHARP CORNERS SURFACE QUALITY ✓

MATERIAL: —

FINISH: —

		DATE
DRN.	[illegible]	10/17/72
CHK'D	[illegible]	11/1/72
ENG.	[illegible]	11/1/72
PROJ. ENG.	[illegible]	11/1/72
PROD.	[illegible]	11/3/72

NEXT HIGHER ASSY.: —

SCALE: —

SHEET 1 OF 1

digital EQUIPMENT CORPORATION MAYNARD MASSACHUSETTS

TITLE: CIRCUIT SCHEMATIC (RK11-D)

SIZE	CODE	NUMBER	REV.
D	CS	5410185-0-1	E

DIST.

FORM NO. DRD 100-A

WIRE TABLE

ITEM NO	DESCRIPTION AWG	COLOR	CONNECTION TO RK11-D
12	18	VIO	DC LO
	18	YEL	AC LO
	14	BLK	GND
	14	RED	+5V

LEGEND

OPTION	VARIATION
RK11-D	DISK CONTROL
RK11-E	DISK CONTROL
RK11-DE	RK11-D WITH RK05-DE
RK11-DF	RK11-D WITH RK05-DF
RK11-DH	RK11-D WITH RK05-DH
RK11-DJ	RK11-D WITH RK05-DJ
RK11J-DE	RK11-D WITH RK05J-DE
RK11J-DF	RK11-D WITH RK05J-DF
RK11J-DH	RK11-D WITH RK05J-DH
RK11J-DJ	RK11-D WITH RK05J-DJ
RK11J-DK	RK11-D WITH RK05J-DK
RK11J-DL	RK11-D WITH RK05J-DL
RK11J-DM	RK11-D WITH RK05J-DM
RK11J-DN	RK11-D WITH RK05J-DN

NOTES:

1. ITEM 17 IS MADE UP OF ITEMS 1 THRU 8 AND 10 THRU 12.
2. USE RK11-D OPTION HARNESS 7009559 IN 11/40 SYSTEMS WITH S/N GREATER THAN 6000 AND 11/45 SYSTEMS WITH S/N GREATER THAN 2000. OLDER MACHINES REQUIRE RK11-D POWER HARNESS 7008992. PDP 11/20 AND PDP 11/15 SYSTEMS AND BA11-ES BOXES USE NO POWER HARNESS OTHER THAN THAT SUPPLIED INTERNAL TO THE BOX. BA11-D BOXES REQUIRE RK11-D POWER HARNESS 7008992.
3. ITEM 8 OR 9 IS INSTALLED ON THE M7255 MODULE DURING SYSTEM INTERGRATION.

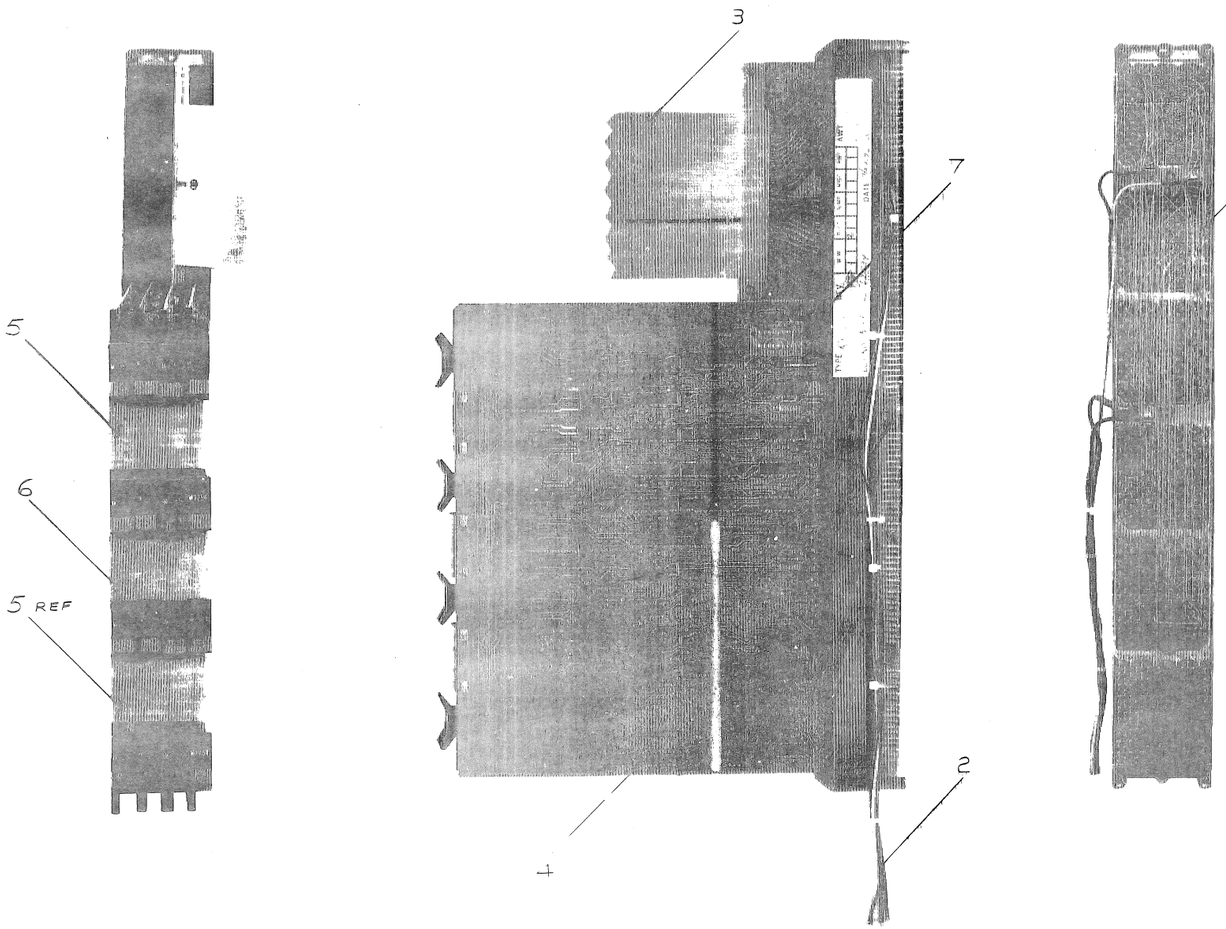

RK11J-DN	RK11J-DM	RK11J-DL	RK11J-DK	RK11J-DJ	RK11J-DH	RK11J-DF	RK11J-DE	RK11-DJ	RK11-DH	RK11-DF	RK11-DE	RK11-E	RK11-D				
1	–	–	–	–	–	–	–	–	–	–	–	–	–	CAB, RK05J 230V 50HZ	RK05J-DN	25	
–	1	–	–	–	–	–	–	–	–	–	–	–	–	CAB, RK05J 115V 50HZ	RK05J-DM	24	
–	–	1	–	–	–	–	–	–	–	–	–	–	–	CAB, RK05J 230V 60HZ	RK05J-DL	23	
–	–	–	1	–	–	–	–	–	–	–	–	–	–	CAB, RK05J 115V 60HZ	RK05J-DK	22	
–	–	–	–	1	–	–	–	–	–	–	–	–	–	TALL CAB, 861, RK05J 230V 50HZ	RK05J-DJ	21	
–	–	–	–	–	1	–	–	–	–	–	–	–	–	TALL CAB, 861, RK05J 115V 50HZ	RK05J-DH	20	
–	–	–	–	–	–	1	–	–	–	–	–	–	–	TALL CAB, 861, RK05J 230V 60HZ	RK05J-DF	19	
–	–	–	–	–	–	–	1	–	–	–	–	–	–	TALL CAB, 861, RK05J 115V 60HZ	RK05J-DE	18	
1	–	–	–	1	1	1	1	1	1	–	–	–	–	DISK CONTROL	RK11-D	17	
–	–	–	–	–	–	–	–	–	–	–	–	–	–	TALL CAB, 861, RK05 115V 60HZ	RK05-DE	16	
–	–	–	–	–	–	–	–	–	–	1	–	–	–	TALL CAB, 861, RK05 230V 60HZ	RK05-DF	15	
–	–	–	–	–	–	–	–	–	1	–	–	–	–	TALL CAB, 861, RK05 115V 50HZ	RK05-DH	14	
–	–	–	–	–	–	–	–	1	–	–	–	–	–	TALL CAB, 861, RK05 230V 50HZ	RK05-DJ	13	
–	–	–	–	–	–	–	–	–	–	–	–	–	1	INTERNAL BUS CONNECTOR	C-CS-M920-0-1	12	
–	–	–	–	–	–	–	–	–	–	–	–	–	1	BUS TERMINATOR	C-CS-M930-0-1	11	
–	–	–	–	–	–	–	–	–	–	–	–	–	1	MAINT MODULE OVERLAY (RK11-D)	A-SS-[illegible]-1051-[illegible]	10	
–	–	–	–	–	–	–	–	–	–	–	–	–	–	3.090 MHZ CRYSTAL	18-10694-4	9	
–	–	–	–	–	–	–	–	–	–	–	–	–	1	2.880 MHZ CRYSTAL	18-10694-3	8	
–	–	–	–	–	–	–	–	–	–	–	–	1	1	PRIORITY PLUG LEVEL 5	5908778	7	
–	–	–	–	–	–	–	–	–	–	–	1	1	1	MODULE CLAMPS WITHOUT SEPARATOR	12-09856-2	6	
–	–	–	–	–	–	–	–	–	–	–	–	–	2	MODULE CLAMPS WITH SEPARATOR	12-09856-1	5	
–	–	–	–	–	–	–	–	–	–	–	–	1	1	MODULE UTILIZATION	D-MU-RK11-D-1	4	
–	–	–	–	–	–	–	–	–	–	–	–	1	1	CABLE 15 FT	D-UA-BC11M-15	3	
–	–	–	–	–	–	–	–	–	–	–	–	–	1	OPTION HARNESS	D-IA-7009559-0[illegible]	2	
–	–	–	–	–	–	–	–	–	–	–	–	–	1	NULL ASSY	C-IA-7009142-0[illegible]	1	
FIRST USED ON OPTION MODEL													QTY	DESCRIPTION	PART NO.	ITEM NO.	

PARTS LIST

UNLESS OTHERWISE SPECIFIED DIMENSION IN INCHES TOLERANCES

DECIMALS	ANGLES
.XXX ±.005	±0° 0'
.XX ±.01	
.X ±.1	

REMOVE BURRS AND BREAK SHARP CORNERS. SURFACE QUALITY ✓

MATERIAL —

FINISH —

		DATE
DRN.	E. Wilson	10/17/72
CHK'D.	[illegible]	11/1/72
ENG.	[illegible]	11/1/72
PROJ. ENG.	[illegible]	11/1/72
PROD.	[illegible]	11/2/72

NEXT HIGHER ASSY. RK11-[illegible]

SCALE NONE

SHEET OF 1

digital EQUIPMENT CORPORATION MAYNARD MASSACHUSETTS

TITLE DISK CONTROL

SIZE	CODE	NUMBER	REV.
D	UA	RK11-C-0	

DIST

REV.	C		
NUMBER	RK11-0-0		
SIZE	D	UA	RK11-C-0

1	11-11D 00006	A	
2	RK11D-0001A	B	
	ORR		
	NULL ASSY		

NOTES:

1. USE YELLOW WIRE ITEM #4 FOR MACHINE WRAPPED.
2. INSTALL STAND-OFFS (ITEM #5) BEFORE AWT.
3. FOR CIRCUIT SCHEMATIC REFER TO D-CS-5410185-0-1
4. GROUND BACKPANEL BY WIRE WRAPPING A BLK 24 AWG WIRE (ITEM #9) ON PIN FØ2T1 AND ATTACH OTHER END UNDER CAPTIVE SCREW (ITEM #3) WITH SOLDER TERMINAL (ITEM #10)

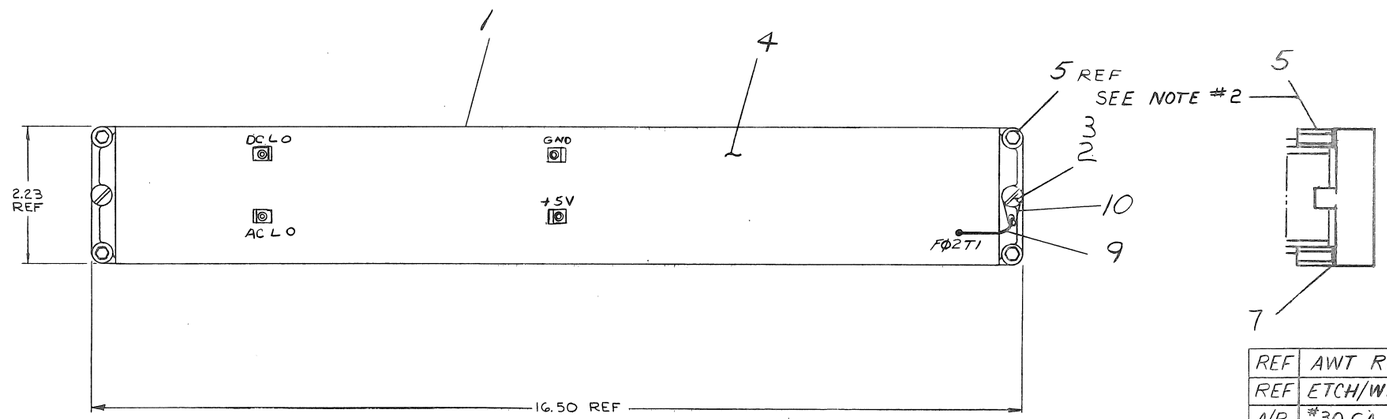

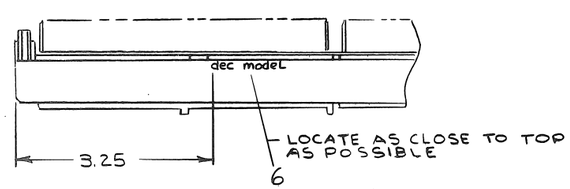

REF	AWT REVISION STATUS	A-WT-7009142-0	13
REF	ETCH/WIRE LIST (RK11-D)	K-WL-RK11-D-2	12
A/R	#30 GA. TWP GREY/V10.	9107773-87	11
1	LOCKING TERMINAL SHAKEPROOF	9006766	10
A/R	#24 SOLID CONDUCTOR, BLK KYNAR	9107688-00	9
~~1~~	~~GROUND CABLE~~	~~C-D-7009378-0-0~~	~~8~~
4	LOCKWASHER #6 EXT TOOTH	9007649	7
1	DECAL LOGIC SERIAL NUMBER	A-SS-7407896-00	6
4	STAND-OFF JAN 9146 B	9009120-1	5
A/R	#30 SOLID CONDUCTOR KYNAR	9105740-99	4
2	SCR CAPTIVE (8-32X1 3/8)	9008157	3
2	RETAINING RING	9009316-1	2
1	BACK PANEL (RK11-D)	D-IA-7009131-00	1
QTY.	DESCRIPTION	PART NO.	ITEM NO.

PARTS LIST

REVISIONS			
CHK	CHANGE NO.		REV.
	RK11D-00010		A
	ORR	10-31-72	
		11-12-73	
	RK11D-00016		B
	LEWIS	5-22-74	
		6-4-74	
	RK11D-00019		C
	R GRUDA	28 Oct 76	
		10-29-76	

BRUNING 40-107 15968

DEC FORM NO. DRC 100-A

FIRST USED ON OPTION/MODEL: RK11-D

UNLESS OTHERWISE SPECIFIED DIMENSION IN INCHES. TOLERANCES

DECIMALS	ANGLES
.XXX = .005 .XX = .02 .X = .1	±0° 30'

REMOVE BURRS AND BREAK SHARP CORNERS SURFACE QUALITY ✓

MATERIAL

FINISH

DRN. E. Wilson	DATE 9/25/72	digital EQUIPMENT CORPORATION MAYNARD, MASSACHUSETTS
CHK'D	DATE	TITLE
ENG.	DATE	WIRED ASS'Y (RK11-D)
PROJ. ENG.	DATE	
PROD. R. Dooley	DATE 11/2/72	
NEXT HIGHER ASSY. B-DD-RK11-D		SIZE C · CODE IA · NUMBER 7009142-0-0 · REV. C
SCALE		DIST.
SHEET 1 OF 1		

SIZE C · CODE IA · NUMBER 7009142-0-0 · REV. C

NOTES:

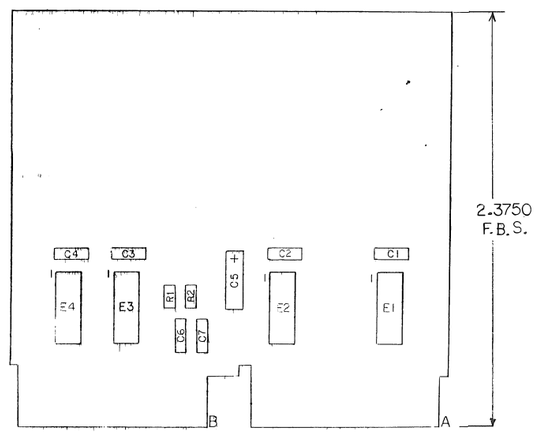

QTY	REF. DESIGNATION	DESCRIPTION	PART NO.	ITEM NO.
REF		X-Y COORDINATE HOLE LOCATION	K-CO-M930-0-4	1
REF		ASSY/DRILLING HOLE LAYOUT	D-AH-M930-0-5	2
REF		MODULE ECO HISTORY	B-MH-M930-0-6	3
1		ETCHED CIRCUIT BOARD	5008696	4
4	C1 THRU C4	CAP .22 µF 50V CER	1010274-01	5
2	C6, C7	CAP 1000pF 250V 20% DISC	1000043	6
1	C5	CAP 39µF 10V 10% TANT	1000076	7
2	R1, R2	RES 383Ω 1/4W 1%	1305125	8
2	E1, E4	C8 RES DIVIDER NETWORK	1312628-00	9
2	E2, E3	C5 RES DIVIDER NETWORK	1312628-01	10

PARTS LIST

FIRST USED ON OPTION MODEL	ETCH BOARD REV.
M-3	E-P3

IC TYPE	GND	+5V
GND AND 5V ARE USUALLY PIN 7 AND 14 RESPECTIVELY EXCEPTIONS ARE STATED ABOVE		

IC PIN LOCATIONS

REV.	CHANGE NO.	CHK.
E		R. SARGENT 7-11-75

REVISIONS

DEC NO.	EIA NO.	DEC NO.	EIA NO.

SEMICONDUCTOR CONVERSION CHART

DRN. J. CARTER	DATE 7-9-75	digital
CHK'D	DATE 7-16-75	
ENG.	DATE 10-3-75	TITLE BUS TERMINATOR
PROJ. ENG.	DATE 10-3-75	
PROD.	DATE	
NEXT HIGHER ASSY		SIZE D CODE CS NUMBER M930-0-1 REV. E
SCALE —		
SHEET 1 OF 1		DIST.

SIZE D CODE CS NUMBER M930-0-1 REV. E

DEC FORM NO. DRD 1,25,M

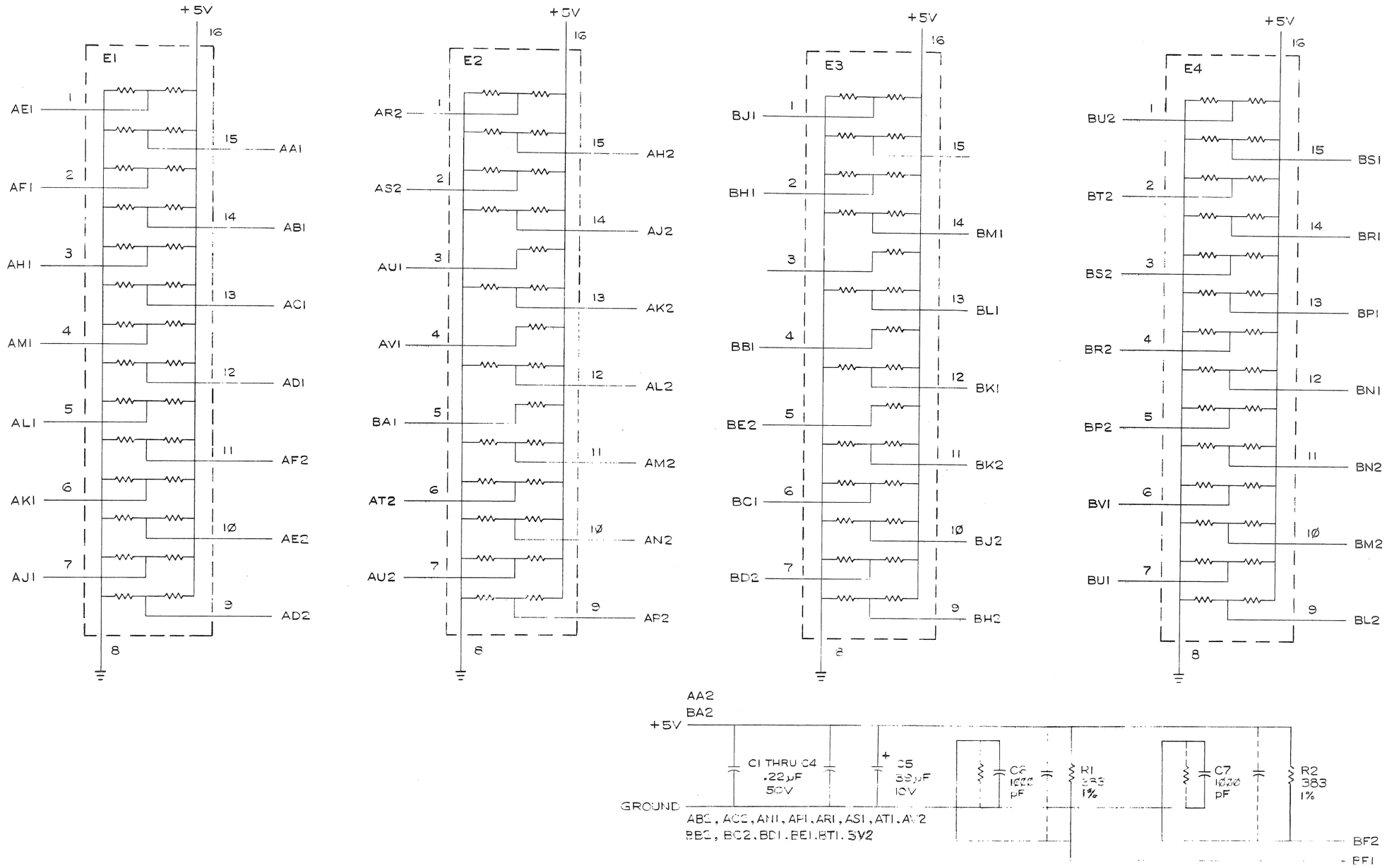

REVISIONS		
CHK	CHANGE NO.	REV.

TITLE	SIZE	CODE	NUMBER	REV.
B. TERMINATOR	D	CS	M930-0-1	E
SCALE	SHEET 2 OF 2	DIST.		

DEC FORM NO. ORD 138

WIRE TABLE

ITEM NO	DESCRIPTION AWG	COLOR	FROM POINT	FROM CONNECTION	FROM TERM	TO POINT	TO CONNECTION	TO TERM	SIGNAL
6	#18	YEL	3		7,8	5	P2-4	3	AC LO
TWP	#18	VIO	4		7,8	6	P2-3	3	DC LO
5	#14	RED	1		7,8	7	P1-1	3	+5
TWP	#14	BLK	2		7,8	8	P1-8	3	GND

NOTES:

1. USE TIE WRAPS (X) ITEM #4 APPROXIMATELY EVERY THREE (3) INCHES WHEN NECESSARY, AND AT EVERY BREAKOUT POINT.
2. ATTACH MALE FASTON DEC # (9008219-0) WITH #4 WOOD SCREWS (4 PLACES).
3. USE CONN. BRKT. # C-MD-9305761-H15-0, MOUNT WITH #6 WOOD SCREWS. USE MATING CONN. 1209350-15.
4. USE CONN. BRKT. # C-MD-9305761-H6-0 MOUNT WITH #6 WOOD SCREWS. USE MATING CONN. 1209350-06.
5. DOT (●) INDICATES NAIL LOCATIONS FOR ASSEMBLY USE ONLY. COVER NAILS WITH SHRINK TUBING TO PREVENT CUTTING HARNESS.

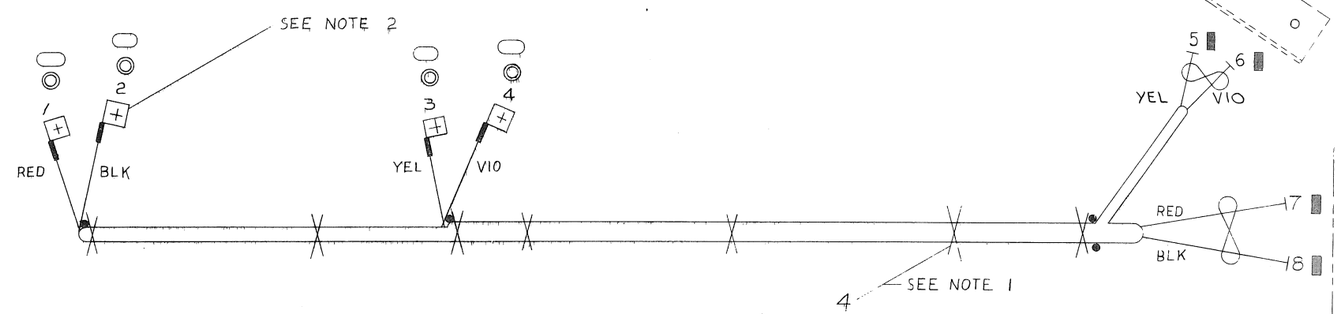

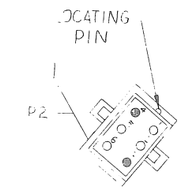

VIEW B-B
REAR VIEW
SCALE : NONE

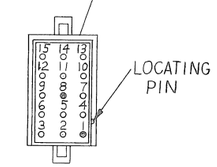

VIEW A-A
REAR VIEW
SCALE : NONE

SCALE
0 IN. 6 IN 12 IN

DO NOT REDUCE
DO NOT BUILD FROM REDUCED PRINT

	QTY.	DESCRIPTION	PART NO.	ITEM NO.
	A/R	TUBING, SHRINKABLE 3/16 ID X 9/16	9107305-02	8
◎	4	CONN, SOLDERLESS	9009262-00	7
	A/R	WIRE, #18 AWG TWP YEL/VIO	9107430-47	6
	A/R	WIRE, #14 AWG TWP BLK/RED	9107440-02	5
X	A/R	WRAP, TIE	9007031	4
▮	4	PIN, MALE	1209378-01	3
	1	HOUSING, CONN. 15 PIN	1209351-15	2
	1	HOUSING, CONN. 6 PIN	1209351-06	1

PARTS LIST

FIRST USED ON OPT / MOD: RK11-D

UNLESS OTHERWISE SPECIFIED DIMENSION IN INCHES
TOLERANCES
DECIMALS: .xxx = .005, .xx = .02, .x = .1
ANGLES: ±0° 30'
REMOVE BURRS AND BREAK SHARP CORNERS SURFACE QUALITY

MATERIAL
FINISH

DRN. DATE 7-24-73
CHK'D. DATE
ENG. DATE
PROJ. ENG. DATE
PROD. DATE
NEXT HIGHER ASSY.
SCALE
SHEET OF

digital EQUIPMENT CORPORATION MAYNARD MASSACHUSETTS

TITLE
OPTION HARNESS RK11-D

SIZE D | CODE A | NUMBER 7009559-0-0 | REV.
DIST.

REVISIONS: REV | CHANGE NO | CHK

D | A | 7009559-0-0

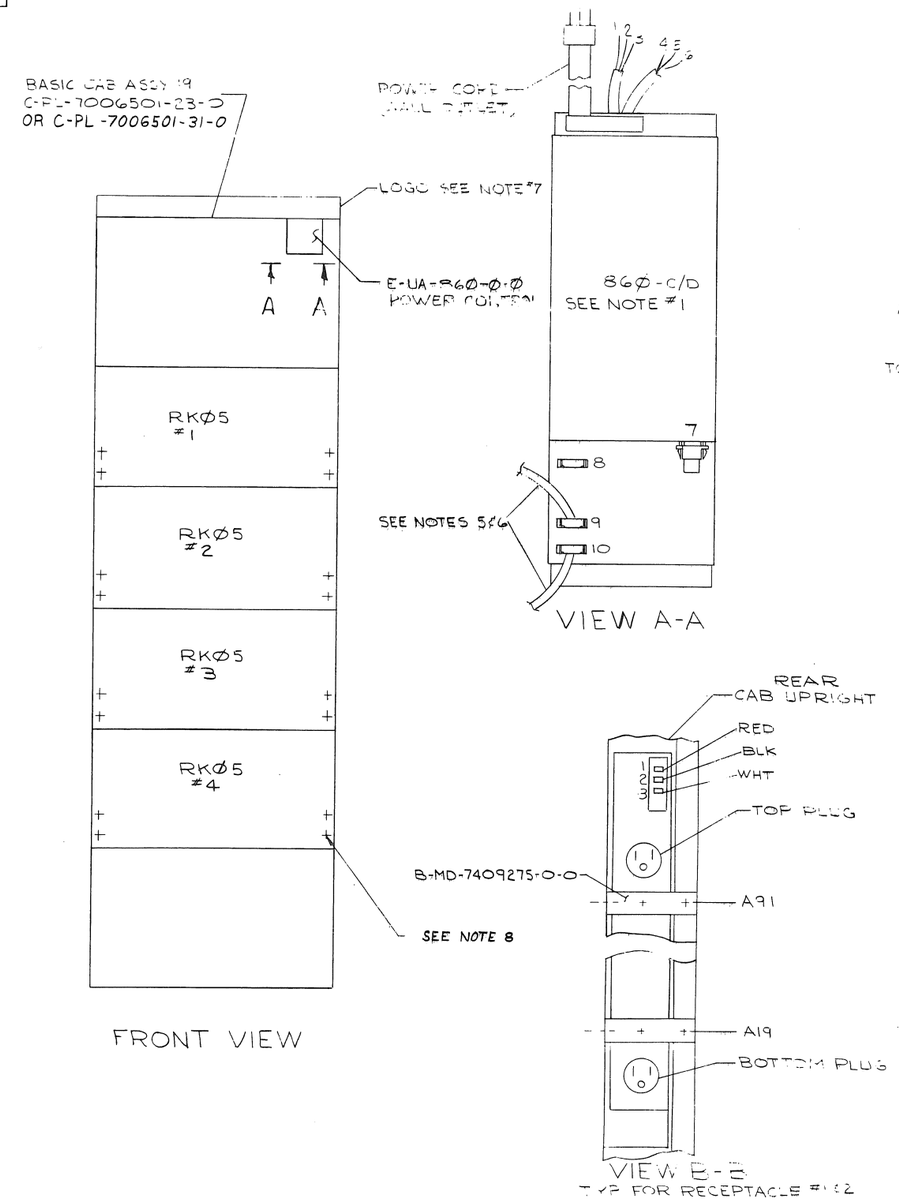

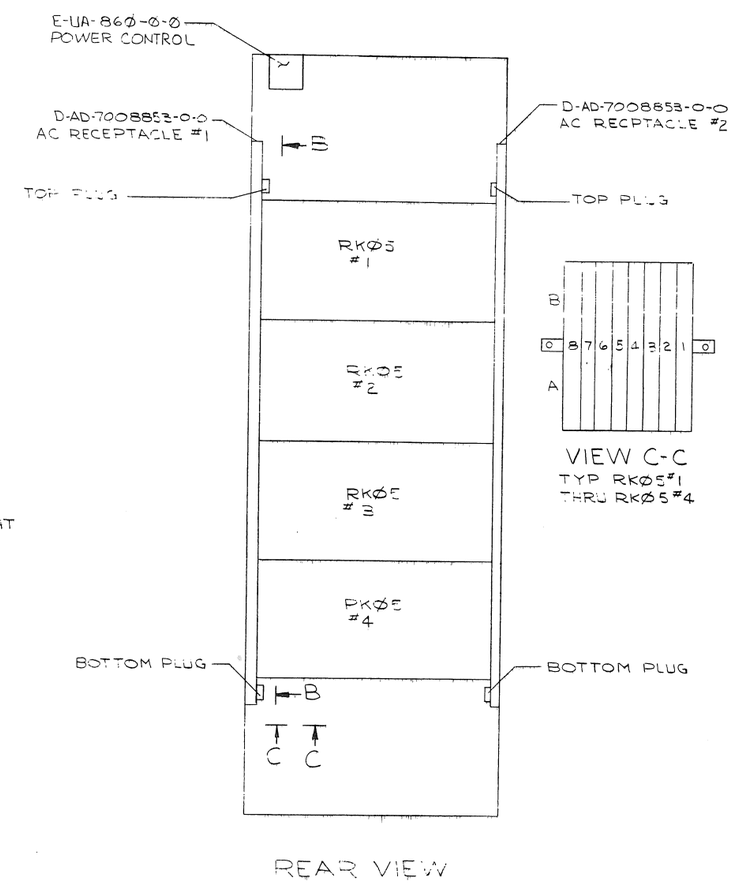

CONFIGURATION WITH 860 POWER CONTROL

NOTES:

1) TO REWORK 860-A & B TO 860-C & D REFER TO DRAWING E-UA-860-0-0.

2) IF LESS THAN 4 DRIVES, THE M930 MODULE IS MOVED TO THE LAST DRIVE ON THE BUS IN THE SLOT NORMALLY OCCUPIED BY THE OUTCOMING BC11A CABLE.

3) IF MORE THAN 4 DRIVES, EACH WILL BE CONFIGURED SIMILARLY IN A SECOND CAB.

4) AS REQUIRED BY CONTROLLER, THE INCOMING CABLE TO RK05 #5 MAY COME DIRECTLY FROM A DISK CONTROL OR FROM THE SLOT NORMALLY OCCUPIED BY THE M930 IN RK05 #4. (SEE NOTE #2). POWER AND CABLING INFORMATION ALSO APPLY TO CAB #2.

5) IN A SYSTEM USING PDP-11/15, 11/20, OR PDP-8 PROCESSORS AND IF 860 OR 861 POWER CONTROL IS FIRST IN THE CHAIN OF POWER CONTROLS, CONNECT P1 OF CABLE #7008964 TO POWER CONTROL AND P2 OF 2 CABLE #7008964 TO H720-E/F IN THE PROCESSOR. DO NOT USE ANY OTHER JUMPER PLUG IN THE PROCESSOR POWER SUPPLY.
IN ALL OTHER SITUATIONS USE CABLE #7008288 FOR INTERCONNECTIONS.

6) PLUGS 8,9 AND 10 ARE WIRED IN PARALLEL. USE ANY PLUGS AS REQUIRED. NO JUMPER PLUG IS REQUIRED ON THE 860 OR 861 POWER CONTROL.

7) USE BLANK LOGO, COLOR TO COINCIDE WITH PRODUCT LINE.

8) TO MOUNT CHASSIS SLIDES ON RACK USE MOUNTING HARDWARE KIT #7009276 OR ITEMS.
1. TINNERMAN NUT #9007786
2. #10-32 PHL TRUSS #9006074-3 HD SCR 5/8 LG
3. #10 EXTERNAL TOOTH #9007651 WASHER
LOCATION OF MOUNTING HOLES TO BE AS FOLLOWS: STARTING FROM BOTTOM OF RACK HOLE NUMBERS FOR FRONT AND REAR, LEFT AND RIGHT.
21,24
39,42
57,60
75,78

9) USE THE PRE-FOLDED CREASES ON THE DISK BUS CABLE FOR CLAMPING. DO NOT PULL THE CABLE TIGHT AGAINST PRE-FILTER. LEAVE SERVICE LOOP SO THAT HAND CAN FIT BETWEEN THE CABLE AND FILTER.

10) RK05'S PLUG INTO SWITCHED AC OUTLETS ONLY.

REVISIONS				
CHK	CHANGE NO	REV		
PM	RK05-00024	A		
	G. SCHNEIDER			
	RK05-00043	B		
	E. Allain 9-14-73			
	G. SCHNEIDER			

FIRST USED ON OPTION/MODEL	QTY.	DESCRIPTION	PART NO.	ITEM NO.
RK05		PARTS LIST		

UNLESS OTHERWISE SPECIFIED DIMENSION IN INCHES. TOLERANCES

DECIMALS	ANGLES
.XXX = .005 .XX = .02 .X = .1	±0° 30'

REMOVE BURRS AND BREAK SHARP CORNERS SURFACE QUALITY ✓

MATERIAL

FINISH

DRN.		DATE 3/13/72
CHK'D.		DATE 6/1/72
ENG.		DATE 7-12-72
PROD. ENG.		DATE 7-12-72
PROD.		DATE

NEXT HIGHER ASSY. B-DD-RK05-0-1

SCALE

SHEET 1 OF 3

digital EQUIPMENT CORPORATION MAYNARD MASSACHUSETTS

TITLE RK05 OPTION CONFIGURATION

SIZE	CODE	NUMBER	REV.
D	CC	RK05-0-15	B

DIST.

DRU 100-A

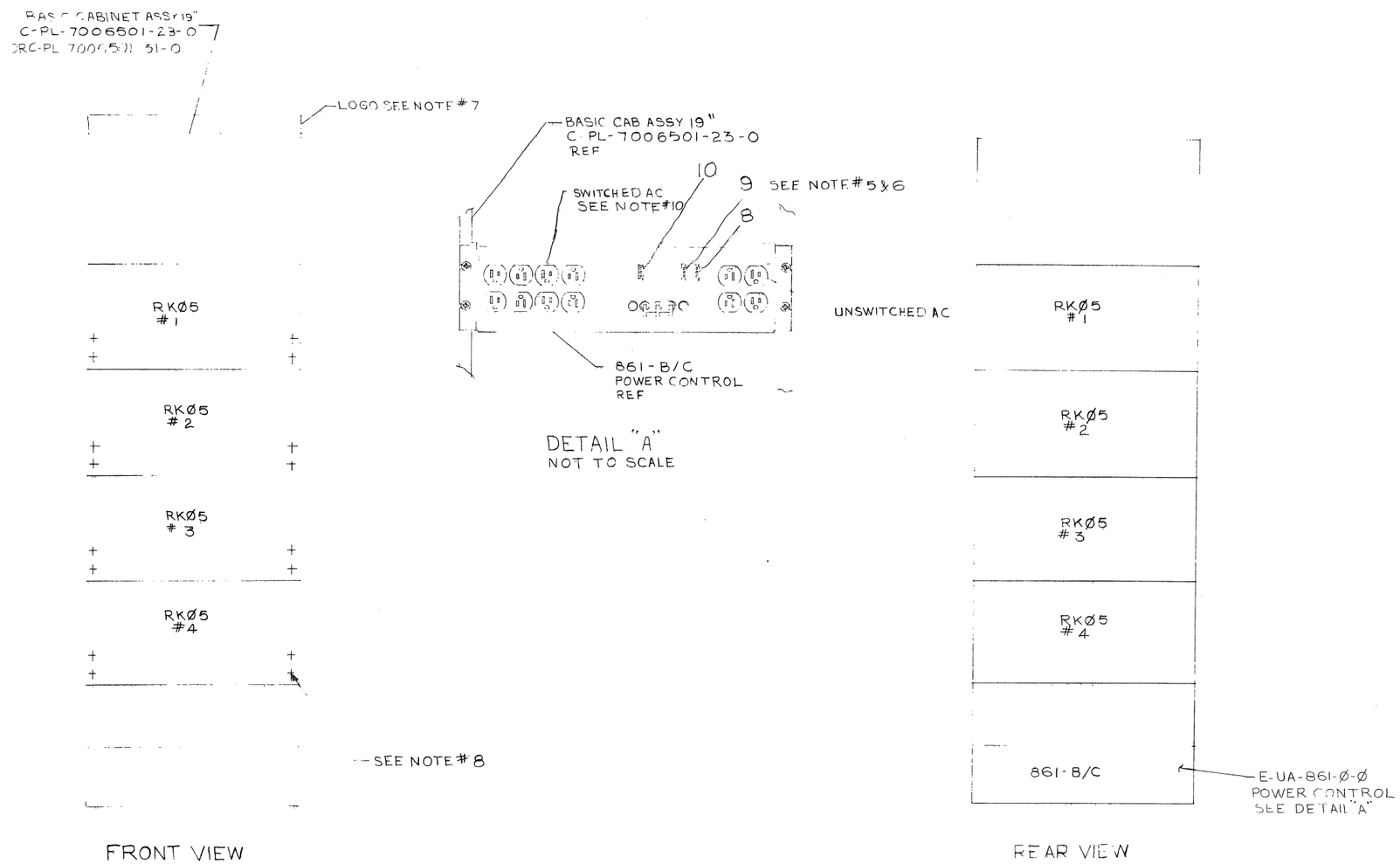

CONFIGURATION WITH 861 POWER CONTROL

FIRST USED ON OPTION/MODEL	QTY.	DESCRIPTION	PART NO.	ITEM NO.
—		PARTS LIST		

UNLESS OTHERWISE SPECIFIED DIMENSION IN INCHES. TOLERANCES

DECIMALS	ANGLES
XXX ± .005 XX ± .02 X ± .1	±0° 30'

REMOVE BURRS AND BREAK SHARP CORNERS SURFACE QUALITY ✓

MATERIAL

FINISH

DRN.		DATE 7-10-72
CHK'D		DATE 7-10-72
ENG.	E. SIMMONS	DATE 7-12-72
PROJ. ENG.	E. SIMMONS	DATE 7-12-72
PROD.	A. KARLSBERG	DATE 7-31-72
NEXT HIGHER ASSY.	—	
SCALE	—	
SHEET 2 OF 3		

digital EQUIPMENT CORPORATION MAYNARD, MASSACHUSETTS

TITLE RKØ5 OPTION CONFIGURATION

SIZE	CODE	NUMBER	REV.
D		RKØ5-Ø-15	B

DIST.

REV	REVISIONS	CHK
	CHANGE NO	

BRUNING 40-107 15568

DRD 100-A

POWER CORD CONNECTIONS WITH 860 POWER CONTROL

FROM	TO
RKØ5 #1	AC RECEPTACLE #1 TOP PLUG
RKØ5 #2	AC RECEPTACLE #2 TOP PLUG
RKØ5 #3	AC RECEPTACLE #2 BOTTOM PLUG
RKØ5 #4	AC RECEPTACLE #1 BOTTOM PLUG

BUS CABLE CONNECTIONS

FROM		TO		CABLE	REMARKS
DEVICE	LOCATION	DEVICE	LOCATION		
DISK CONTROL	A/R	RKØ5 #1	AB8	BC11A	LENGTH A/R
RKØ5 #1	AB7	RKØ5 #2	AB7	BC11A-6	
RKØ5 #2	AB8	RKØ5 #3	AB8	BC11A-6	
RKØ5 #3	AB7	RKØ5 #4	AB7	BC11A-6	
RKØ5 #4	AB8	—	—	MRRD	MODULE

860 POWER CONNECTIONS

AWG	COLOR	FROM	TO	REMARKS
10 TWP	BLK	86Ø-PT1*	RECP #1-1	SEE VIEW B-B
	WHT	86Ø-PT2*	#1-2	
	RED	86Ø-PT3*	#1-3	
10 TWP	BLK	86Ø-PT4*	#2-1	
	WHT	86Ø-PT5*	#2-2	
	RED	86Ø-PT6*	RECP #2-3	

*(ASTERISK) INDICATES WIRE POINTS ON 86Ø POWER CONTROL MARKED WITH BRADY MARKERS.

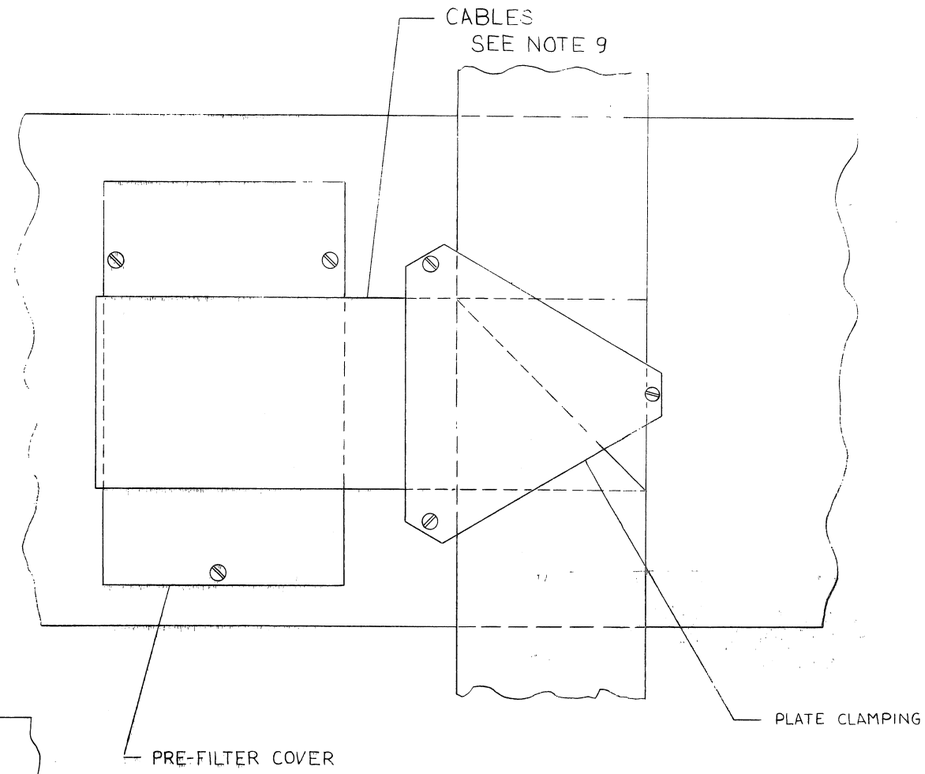

CABLE CLAMPING

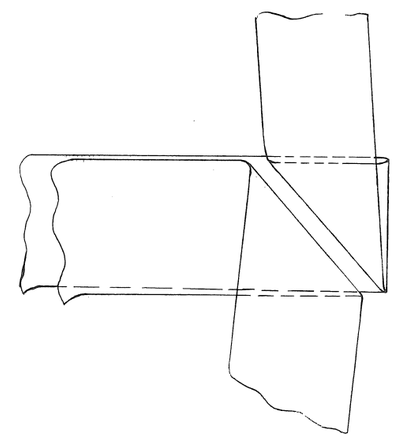

CABLE FOLDING FOR CLAMPING

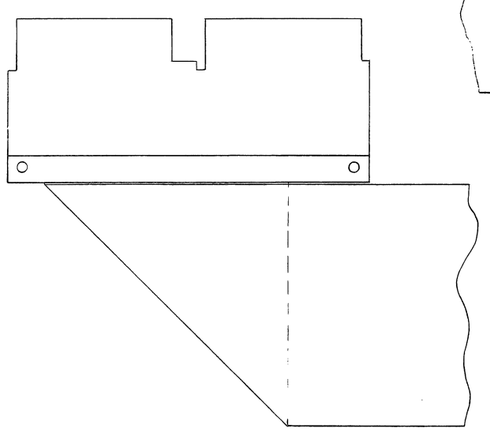

FIRST FOLD FOR UNIBUS CABLE

FIRST USED ON OPTION/MODEL	QTY.	DESCRIPTION	PART NO.	ITEM NO.
—		PARTS LIST		

UNLESS OTHERWISE SPECIFIED DIMENSION IN INCHES. TOLERANCES

DECIMALS	ANGLES
.XXX = 005 .XX = 02 X = 1	±0° 30'

REMOVE BURRS AND BREAK SHARP CORNERS SURFACE QUALITY ✓

MATERIAL

FINISH

DRN.		DATE
CHK'D.		DATE 6-21-72
ENG.		DATE 7-12-72
PROJ. ENG.		DATE 7-12-72
PROD.		DATE
NEXT HIGHER ASSY.		
SCALE		
SHEET 3 OF 3		

digital EQUIPMENT CORPORATION MAYNARD MASSACHUSETTS

TITLE RKØ5 OPTION CONFIGURATION

SIZE	CODE	NUMBER	REV.
D	00	RKØ5-Ø-15	B

DIST.

REVISIONS	CHANGE NO.	REV.
CHK		

DRD 100-A

RK11-D V2			
B2			
	OFF	OFF	
	A1	U1	
	OFF	OFF	
CNTL RDY	HE	DATA	OUT BUFF FULL
SEEK OR RSET	RD OR RDCK	WT OR WTCK	IN BUFF FULL
WC OVF	WT GATE	RD GATE	FILE EMTY
R1	RKDA 12	RKDA 11	FILE FULL
RKDA 10	RKDA 09	RKDA 08	D1
RKDA 07	RKDA 06	RKDA 05	RKDA 04
RKDA 03	RKDA 02	RKDA 01	RKDA 00

FIRST USED ON OPT 1110D

RK11-D

REVISIONS		
CHK	CHANGE NO.	REV.

SPEC# 7200100-14 (BLACK)

DRN. D. Mattson	DATE 6 2 72	digital EQUIPMENT CORPORATION MAYNARD, MASSACHUSETTS
CHK'D. BW Taylor	DATE	TITLE
ENG.	DATE	MAINTENANCE MODULE OVERLAY (RK11 D)
PROJ. ENG.	DATE	
PROD.	DATE 6/6/72	
NEXT HIGHER ASSY 0-MD-5509081-0-0		SIZE A / CODE 55 / NUMBER 5509081-0-11 / REV.
SCALE		
SHEET OF		DIST.

DIGITAL EQUIPMENT CORPORATION
MAYNARD, MASSACHUSETTS

ACCESSORY LIST

MADE BY [illegible] DATE 12-8-72	CHECKED [illegible] DATE	SECTION
ENG [illegible] DATE 12/11/72	PROD R. Conley DATE 12/13/72	ISSUED SECT.

LEGEND
- D DOCUMENT
- DN DOCUMENT CHANGE NOTICE
- PA PAPER TAPE ASCII
- PB PAPER TAPE BINARY
- PM PAPER TAPE READ-IN-MODE

ITEM NO.	DWG NO./PART NO.	DESCRIPTION	RK11-D	RK11-E						KIT CHECK BY ____ DATE ____	INSTALLATION CHECK BY ____ DATE ____
1	See variations	Complete print set	1	1							
2	DEC-11-HRKDA-A D	Manual, RK11-D,E	1	1							
3	LIBKIT-11-RK11-Ø	Sealed software kit	1	1							
4	MAINDEC-11-DZQGA-B-D	GTP write-up (Field add-on only)	1	1							
5	MAINDEC-11-DZQGA-B-PB	GTP binary tape (Field add-on only)	1	1							
6	M920	UNIBUS jumper	1	1							
7	BC11-A-15	15 foot UNIBUS cable	1	1							
8	A-SS-5509081-11	Transparent overlay to KM11-A									

TITLE	ASSY. NO.	SIZE	CODE	NUMBER	REV.	ECO NO
MOVING HEAD DISK CONTROL RK11-D,E	SHEET 1 OF	A	AL	RK11-A-6		
		DIST.				

DEC 16-(325)-1075-N172 DRA 121

DIGITAL EQUIPMENT CORPORATION
MAYNARD, MASSACHUSETTS

PARTS LIST

MADE BY B. VOWLES DATE 10/1/72	CHECKED T. ORR DATE 11/1/72	SECTION
ENG T. ORR DATE 11/1/72	PROD R. DOOLEY DATE 12/13/72	ISSUED SECT.

ITEM NO.	DWG NO./PART NO.	DESCRIPTION	QUANTITY/VARIATION RK11-C	RK11-D	RK11-E									
1	MAINDEC-11-DZRKA-D	RK11 DISK STATIC TEST - WRITE UP	1	1	1									
2	MAINDEC-11-DZRKA-PB	RK11 STATIC TEST BINARY TAPE	1	1	1									
3	MAINDEC-11-DZRKB-D	RK11 DATA TEST WRITE UP	1	1	1									
4	MAINDEC-11-DZRKB-PB	RK11 DATA TEST BINARY TAPE	1	1	1									
5	MAINDEC-11-DZRKC-A-D	RK11 RANDOM EXERCISOR WRITE UP	1	1	1									
6	MAINDEC-11-DZRKC-A-PB	RK11 RANDOM EXERCISOR BINARY TAPE	1	1	1									
7	MAINDEC-11-DZRKD-A-D	BASIC LOGIC TEST WRITE UP	1	1	1									
8	MAINDEC-11-DZRKD-PB	BASIC LOGIC TEST BINARY TAPE	1	1	1									
9	MAINDEC-11-DZRKF-A-D	RK11/RKØ5 DYNAMIC TEST WRITE UP	1	1	1									
10	MAINDEC-11-DZRKF-PB	RK11/RKØ5 DYNAMIC TEST BINARY TAPE	1	1	1									
11	MAINDEC-11-DZRKH-A-D	RK11/RKØ5 PERFORMANCE EXERCISER WRITE UP	1	1	1									
12	MAINDEC-11-DZRKH-PB	RK11/RKØ5 PERFORMANCE EXERCISER BINARY TAPE	1	1	1									
13	MAINDEC-11-DZRKI-A-D	UTILITY PACKAGE WRITE UP	1	1	1									
14	MAINDEC-11-DZRKI-PB	UTILITY PACKAGE BINARY TAPE	1	1	1									

TITLE	ASSY NO.	SIZE	CODE	NUMBER	REV.	ECO NO.
MOVING HEAD DISK CONTROL RK11-D.E	SHEET 1 OF 1	A	PL	RK11-D-7	A	RK11-D-00017

DIST.

DEC FORM DEC 16-(325)-1031-N870
DRA 110

REVISIONS			
CHK	CHANGE NO.	REV.	
	RKIID-00003	A	Beasley 12-4-72
	T. ORR		
	RKIID-00005	B	B. Blodgett 4-3-73
	T. ORR		
	RKIID-00009	C	E. ALLain 9-26-73
	T. ORR		
	RKIID-00011	D	J. Chartier 11-12-73
	ORR		
	RKIID-00013	E	J. Manderville 2-5-74
	T. ORR		
	RKIID-00015	F	J. Chartier 4-30-74
	T. ORR		
	RKIID-00019	H	

FIRST USED ON OPTION MODEL
RKII-D

QTY.	DESCRIPTION	PART NO.	ITEM NO.
	PARTS LIST		

DRN.		DATE 7/2-72	digital EQUIPMENT CORPORATION MAYNARD, MASSACHUSETTS
CHK'D.		DATE	
ENG.		DATE 10/4/72	TITLE ETCH/WIRE LIST (RKII-D)
PROJ. ENG.		DATE	
PROD.		DATE	
NEXT HIGHER ASSEMBLY	C-14-70C91-42-0-0		
SCALE			SIZE K / CODE WL / NUMBER RKII-D-2 / REV. H
SHEET 1 OF 1			DIST.

DEC FORM NO. DRB 109

```
RRRRRRRRRRRR        KKK         KKK          111                111          DDDDDDDDDDDD
RRRRRRRRRRRR        KKK         KKK          111                111          DDDDDDDDDDDD
RRRRRRRRRRRR        KKK         KKK          111                111          DDDDDDDDDDDD
RRR         RRR     KKK         KKK       111111             111111          DDD         DDD
RRR         RRR     KKK         KKK       111111             111111          DDD         DDD
RRR         RRR     KKK         KKK       111111             111111          DDD         DDD
RRR         RRR     KKK      KKK             111                111          DDD         DDD
RRR         RRR     KKK      KKK             111                111          DDD         DDD
RRR         RRR     KKK      KKK             111                111          DDD         DDD
RRRRRRRRRRRR        KKKKKKKKK                111                111          DDD         DDD
RRRRRRRRRRRR        KKKKKKKKK                111                111          DDD         DDD
RRRRRRRRRRRR        KKKKKKKKK                111                111          DDD         DDD
RRR    RRR          KKK      KKK             111                111          DDD         DDD
RRR    RRR          KKK      KKK             111                111          DDD         DDD
RRR    RRR          KKK      KKK             111                111          DDD         DDD
RRR        RRR      KKK         KKK          111                111          DDD         DDD
RRR        RRR      KKK         KKK          111                111          DDD         DDD
RRR        RRR      KKK         KKK          111                111          DDD         DDD
RRR         RRR     KKK         KKK       111111111          111111111       DDDDDDDDDDDD
RRR         RRR     KKK         KKK       111111111          111111111       DDDDDDDDDDDD
RRR         RRR     KKK         KKK       111111111          111111111       DDDDDDDDDDDD


NNN         NNN     LLL
NNN         NNN     LLL
NNN         NNN     LLL
NNN         NNN     LLL
NNN         NNN     LLL
NNN         NNN     LLL
NNNNNN      NNN     LLL
NNNNNN      NNN     LLL
NNNNNN      NNN     LLL
NNN    NNN  NNN     LLL
NNN    NNN  NNN     LLL
NNN    NNN  NNN     LLL
NNN        NNNNNN   LLL
NNN        NNNNNN   LLL
NNN        NNNNNN   LLL
NNN         NNN     LLL
NNN         NNN     LLL
NNN         NNN     LLL
NNN         NNN     LLLLLLLLLLLLLLL
NNN         NNN     LLLLLLLLLLLLLLL
NNN         NNN     LLLLLLLLLLLLLLL
```

```
LPTSPL version 1W0(2425) Running on LPT010
 *START* User [=LIST SUPP [202,202] Job  PK110 Seq. 4600 Date 02-Nov-76 11:31:23 Monitor DEC-10 Cadnet/1 6.02AZ *START*
Request created: 02-Nov-76  11:07:56
File: DSK:PK110.NL[202,202] Created: 01-Nov-76 15:16:00 <057>  Printed: 02-Nov-76 11:31:35
QUEUE Switches:  /FILE:ASCII /COPIES:1 /SPACING:1 /LIMIT:250 /FORMS:NORMAL
```

```
PK110.M                    VRF248,V34(63)-1 23-AUG-76                                    1-Nov-76      15:16      PAGE 1
RUN NAME          A/P  PIN      ORDER   BAY -   Q  DRAW   RV RG Y   X  Z    REMARKS                NC LENGTH EXCEPTIONS     RUN
                       NAME     PIN     ORDER              OPT                                       FLAG                     NUMBER

+5V                         A01A2        1-01 #  P          D02          2                                1                      1
+5V                         A02A2        1-02 #  P          D02          1                                1                      1
+5V                         A03A2        1-03 #  P          D02          2                                1                      1
+5V                         A04A2        1-04 #  P          D02          1                                1-3/8                  1
+5V                         A03B2        1-05 #  P          D02          2                                0-1/8                  1
+5V                         A03J2        1-06 #  P          D02          1                                0-1/8                  1
+5V                         A03K2        1-07 #  P          D02          2                                0-1/8                  1
+5V                         A03L2        1-08 #  P          D02          1                                0-1/8                  1
+5V                         A03M2        1-09 #  P          D02          2                                2-5/8                  1
+5V                         B01A2        1-10 #  P          D02          1                                1                      1
+5V                         B02A2        1-11 #  P          D02          2                                0-5/8                  1
+5V                         B03B1        1-12 #  P          D02          1                                0-1/8                  1
+5V                         B03A2        1-13 #  P          D02          2                                1                      1
+5V                         B01A2        1-14 #  P          D02          1                                3                      1
+5V                         C03A2        1-15 #  P          D01          2                                1                      1
+5V                         C03A2        1-16 #  P          D01          1                                1                      1
+5V                         C02A2        1-17 #  P          D01          2                                1                      1
+5V                         C01A2        1-18 #  P          D01          1                                3-2/8                  1
+5V                         D01A2        1-19 #  P          D01          2                                1                      1
+5V                         D02A2        1-20 #  P          D01          1                                1                      1
+5V                         D03A2        1-21 #  P          D01          2                                1                      1
+5V                         D04A2        1-22 #  P          D01          1                                3                      1
+5V                         E04A2        1-23 #  P          D01          2                                1                      1
+5V                         E03A2        1-24 #  P          D01          1                                1                      1
+5V                         E02A2        1-25 #  P          D01          2                                1                      1
+5V                         E01A2        1-26 #  P          D01          1                                3-2/8                  1
+5V                         F01A2        1-27 #  P          D01          2                                1                      1
+5V                         F02A2        1-28 #  P          D01          1                                1                      1
+5V                         F03A2        1-29 #  P          D01          2                                1                      1
+5V                         F04A2        1-30 #  P          D01                                           1                      1
+5V                                      1                                                             34-6/8 1400000000      1

0 TO GPR                H   F01R1        1-01 #  P          D01          1                                1-6/8                  2
0 TO GPR                H   F03R2        1-02 #  P          D01          2                                1                      2
0 TO GPR                H   F04R2        1-03 #  P          D01                                           2                      2
0 TO GPR                H                1                                                             2-6/8 1400000000       2

ADD ACK                 H   F01J1        1-01 #  P          D01          1                                1                      3
ADD ACK                 H   F02J1        1-02 #  P          D01                                           3
ADD ACK                 H                1                                                             1-0/8 1400000000       3

B CNTRL RDY             H   B03R2        1-01 #              D02          1                                8-5/8                  4
B CNTRL RDY             H   B04S2        1-02 #  P          D01          2                                1-4/8                  4
B CNTRL RDY             H   F02S2        1-03 #  P          D01          1                                1                      4
B CNTRL RDY             H   B01S2        1-04 #  P          D01                                           4
B CNTRL RDY             H                1                                                             11-1/8 1400000000      4

BG 1 IN                 H   B01E2        1-01 #  H          D02          1                                4-2/8                  5
BG 1 IN                 H   C01S2        1-02 #              D01                                           5
BG 1 IN                 H                1                                                             4-2/8 1400000000       5

BG 1 OUT                H   B04E2        1-01 #  H          D02          1                                5-5/8                  6
BG 1 OUT                H   C01I2        1-02 #              D01                                           6
BG 1 OUT                H                1                                                             5-5/8 1400000000       6
```

RUN NAME	A/F	PIN NAME	ORDER PIN	BAY - ORDER	Q	DRAW OPT	RV	RG	Y	X	Z	REMARKS	NC FLAG	LENGTH	EXCEPTIONS	RUN NUMBER
BG 5 IN	H	B01B1		1-01 *	H		D02				1			4-3/8		7
BG 5 IN	H	C01P2		1-02 *			D01									7
BG 5 IN	H			1										4-3/8	1400000000	7
BG 5 OUT	H	B04B1		1-01 *	H		D02				1			5-5/8		8
BG 5 OUT	H	C01R2		1-02 *			D01									8
BG 5 OUT	H			1										5-5/8	1400000000	8
BG 6 IN	H	B01A1		1-01 *	H		D02				1			4-3/8		9
BG 6 IN	H	C01M2		1-02 *			D01									9
BG 6 IN	H			1										4-3/8	1400000000	9
BG 6 OUT	H	B04A1		1-01 *	H		D02				1			5-3/8		10
BG 6 OUT	H	C01N2		1-02 *			D01									10
BG 6 OUT	H			1										5-3/8	1400000000	10
BG 7 IN	H	B01V1		1-01 *	H		D02				1			4-5/8		11
BG 7 IN	H	C01K2		1-02 *			D01									11
BG 7 IN	H			1										4-5/8	1400000000	11
BG 7 OUT	H	B04V1		1-01 *	H		D02				1			5-7/8		12
BG 7 OUT	H	C01L2		1-02 *			D01									12
BG 7 OUT	H			1										5-7/8	1400000000	12
BG IN	H	C01V2		1-01 *	P		D01				1			2		13
BG IN	H	C04V2		1-02 *	P		D01									13
BG IN	H			1										2-0/8	1400000000	13
BG OUT	H	C01U2		1-01 *	P		D01				1			2		14
BG OUT	H	C04U2		1-02 *	P		D01									14
BG OUT	H			1										2-0/8	1400000000	14
BR OUT	L	C01J2		1-01 *	P		D01				1			2		15
BR OUT	L	C04J2		1-02 *	P		D01									15
BR OUT	L			1										2-0/8	1400000000	15
BUS A00	L	B01H2		1-01 *	P		D02				2			2		16
BUS A00	L	B04H2		1-02 *			D02				1			5-3/8		16
BUS A00	L	C04D1		1-03 *			D01									16
BUS A00	L			1										7-3/8	1400000000	16
BUS A01	L	B01H1		1-01 *	P		D02				2			2		17
BUS A01	L	B04H1		1-02 *			D02				1			4-3/8		17
BUS A01	L	C04T2		1-03 *			D01									17
BUS A01	L			1										6-3/8	1400000000	17
BUS A02	L	B01J2		1-01 *	P		D02				2			2		18
BUS A02	L	B04J2		1-02 *			D02				1			4-1/8		18
BUS A02	L	C04S1		1-03 *			D01									18
BUS A02	L			1										6-1/8	1400000000	18
BUS A03	L	B01J1		1-01 *	P		D02				2			2		19
BUS A03	L	B04J1		1-02 *			D02				1			3-6/8		19
BUS A03	L	C04P1		1-03 *			D01									19
BUS A03	L			1										5-6/8	1400000000	19

RUN NAME	A/F	PIN NAME	ORDER PIN	BAY - ORDER	Q	DRAW OPT	RV	RG	Y	X	Z	REMARKS	NC FLAG	LENGTH	EXCEPTIONS	RUN NUMBER
BUS A04	L	B01K2		1-01 *	P		D02				2			2		20
BUS A04	L	B04K2		1-02 *			D02				1			3-5/8		20
BUS A04	L	C04P1		1-03 *			D01									20
BUS A04	L			1										5-5/8	1400000000	20
BUS A05	L	B01K1		1-01 *	P		D02				2			2		21
BUS A05	L	B04K1		1-02 *			D02				1			3-7/8		21
BUS A05	L	C04R2		1-03 *			D01									21
BUS A05	L			1										5-7/8	1400000000	21
BUS A06	L	B01L2		1-01 *	P		D02				2			2		22
BUS A06	L	B04L2		1-02 *			D02				1			3-1/8		22
BUS A06	L	C04M2		1-03 *			D01									22
BUS A06	L			1										5-1/8	1400000000	22
BUS A07	L	B01L1		1-01 *	P		D02				2			2		23
BUS A07	L	B04L1		1-02 *			D02				1			3		23
BUS A07	L	C04L1		1-03 *			D01									23
BUS A07	L			1										5-0/8	1400000000	23
BUS A08	L	B01M2		1-01 *	P		D02				2			2		24
BUS A08	L	B04M2		1-02 *			D02				1			2-7/8		24
BUS A08	L	C04K1		1-03 *			D01									24
BUS A08	L			1										4-7/8	1400000000	24
BUS A09	L	B01M1		1-01 *	P		D02				2			2		25
BUS A09	L	B04M1		1-02 *			D02				1			3-1/8		25
BUS A09	L	C04L2		1-03 *			D02									25
BUS A09	L			1										5-1/8	1400000000	25
BUS A10	L	B01N2		1-01 *	P		D02				2			2		26
BUS A10	L	B04N2		1-02 *			D02				1			2-3/8		26
BUS A10	L	C04H2		1-03 *			D01									26
BUS A10	L			1										4-3/8	1400000000	26
BUS A11	L	B01N1		1-01 *	P		D02				2			2		27
BUS A11	L	B04N1		1-02 *			D02				1			5		27
BUS A11	L	D04F1		1-03 *			D01									27
BUS A11	L			1										7-0/8	1400000000	27
BUS A12	L	B01P2		1-01 *	P		D02				2			2		28
BUS A12	L	B04P2		1-02 *			D02				1			2-1/8		28
BUS A12	L	C04F1		1-03 *			D01									28
BUS A12	L			1										4-1/8	1400000000	28
BUS A13	L	B01P1		1-01 *	P		D02				2			2		29
BUS A13	L	B04P1		1-02 *			D02				1			2-3/8		29
BUS A13	L	C04F2		1-03 *			D01									29
BUS A13	L			1										4-3/8	1400000000	29
BUS A14	L	B01R2		1-01 *	P		D02				1			2		30
BUS A14	L	B04R2		1-02 *			D02				2			1-5/8		30
BUS A14	L	C04B1		1-03 *			D01									30
BUS A14	L			1										3-5/8	1400000000	30

RUN NAME	A/P	PIN NAME	ORDER PIN	BAY = ORDER	Q	DRAW OPT	RV PG Y	X	Z	REMARKS	NC LENGTH EXCEPTIONS FLAG	RUN NUMBER
BUS A15	L	B01R1		1=01 *	P		D02		2		2	31
BUS A15	L	B04R1		1=02 *			D02		1		5=5/8	31
BUS A15	L	D04P1		1=03 *			D01					31
BUS A15	L			1							7=5/8 1400000000	31
BUS A16	L	B01S2		1=01 *	P		D02		3		2	32
BUS A16	L	B04S2		1=02 *			D02		3		1=5/8	32
BUS A16	L	C04D1		1=03 *	P		D01		3		2	32
BUS A16	L	C01D1		1=04 *			D01					32
BUS A16	L			1							5=5/8 1400000000	32
BUS A17	L	B01S1		1=01 *	P		D02		3		2	33
BUS A17	L	B04S1		1=02 *			D02		3		1=6/8	33
BUS A17	L	C04E1		1=03 *	P		D01		3		2	33
BUS A17	L	C01E1		1=04 *			D01					33
BUS A17	L			1							5=6/8 1400000000	33
BUS AC 10	L	D02F1		1=01 *					1		6=1/8	34
BUS AC 10	L	B01F1		1=02 *	P				2		2	34
BUS AC 10	L	B04F1		1=03 *					1		2=3/8	34
BUS AC 10	L	A03R2		1=04 *								34
BUS AC 10	L			1							10=4/8 1400000000	34
BUS BBS1	L	A01P2		1=01 *	P		D02		2		2	35
BUS BBS1	L	A04P2		1=02 *	H		D02		1		11	35
BUS BBS1	L	B04P2		1=03 *			D01					35
BUS BBS1	L			1							13=0/8 1400000000	35
BUS BK 4	L	B04D2		1=01 *	P		D02		2		2	36
BUS BK 4	L	B01D2		1=02 *	H		D02		1		3=3/8	36
BUS BK 4	L	C01H2		1=03 *			D01					36
BUS BK 4	L			1							5=3/8 1400000000	36
BUS BK 5	L	B04C1		1=01 *	P				2		2	37
BUS BK 5	L	B01C1		1=02 *	H		D02		1		3=5/8	37
BUS BK 5	L	C01F2		1=03 *			D01					37
BUS BK 5	L			1							5=5/8 1400000000	37
BUS BK 6	L	A04D2		1=01 *	P		D02		2		2	38
BUS BK 6	L	A01D2		1=02 *	H		D02		1		4=2/8	38
BUS BK 6	L	C01E2		1=03 *			D01					38
BUS BK 6	L			1							6=2/8 1400000000	38
BUS BK 7	L	A04T2		1=01 *	P		D02		2		2	39
BUS BK 7	L	A01T2		1=02 *	H		D02		1		4=2/8	39
BUS BK 7	L	C01D2		1=03 *			D01					39
BUS BK 7	L			1							6=2/8 1400000000	39
BUS C4	L	B01U2		1=01 *	P		D02		2		2	40
BUS C4	L	B04U2		1=02 *	H		D02		1		4=1/8	40
BUS C4	L	D04C1		1=03 *			D01					40
BUS C4	L			1							6=1/8 1400000000	40

RUN NAME	A/P	PIN NAME	ORDER PIN	BAY = ORDER	Q	DRAW OPT	RV PG Y	X	Z	REMARKS	NC LENGTH EXCEPTIONS FLAG	RUN NUMBER
BUS C1	L	B01T2		1=01 *	P		D02		2		2	41
BUS C1	L	B04T2		1=02 *	H		D02		1		8=1/8	41
BUS C1	L	B04R1		1=03 *			D01					41
BUS C1	L			1							10=1/8 1400000000	41
BUS C PA	H	C03U1			P		D01				1=PIN RUN	42
BUS D00	L	A01C1		1=01 *	P		D02		2		2	43
BUS D00	L	A04C1		1=02 *			D02		1		6=1/8	43
BUS D00	L	C04D2		1=03 *			D01					43
BUS D00	L			1							8=1/8 1400000000	43
BUS D00 (1)	H	D01D2		1=01 *	P		D01		1		1=4/8	44
BUS D00 (1)	H	D03D2		1=02 *	P		D01		2		1	44
BUS D00 (1)	H	D04D2		1=03 *	P		D01					44
BUS D00 (1)	H			1							2=4/8 1400000000	44
BUS D01	L	A01D2		1=01 *	P		D02		2		2	45
BUS D01	L	A04D2		1=02 *			D02		1		5=7/8	45
BUS D01	L	C04C1		1=03 *			D01					45
BUS D01	L			1							7=7/8 1400000000	45
BUS D01 (1)	H	D01E2		1=01 *	P		D01		1		1=4/8	46
BUS D01 (1)	H	D03F2		1=02 *	P		D01		2		1	46
BUS D01 (1)	H	D04F2		1=03 *	P		D01					46
BUS D01 (1)	H			1							2=4/8 1400000000	46
BUS D02	L	A01D1		1=01 *	P		D02		2		2	47
BUS D02	L	A04D1		1=02 *			D02		1		5=7/8	47
BUS D02	L	C04E2		1=03 *			D01					47
BUS D02	L			1							7=7/8 1400000000	47
BUS D02 (1)	H	D01F2		1=01 *	P		D01		1		1=4/8	48
BUS D02 (1)	H	D03F2		1=02 *	P		D01		2		1	48
BUS D02 (1)	H	D04F2		1=03 *	P		D01					48
BUS D02 (1)	H			1							2=4/8 1400000000	48
BUS D03	L	A01E2		1=01 *	P		D02		2		2	49
BUS D03	L	A04E2		1=02 *			D02		1		8=5/8	49
BUS D03	L	D04E1		1=03 *			D01					49
BUS D03	L			1							10=5/8 1400000000	49
BUS D03 (1)	H	D01H2		1=01 *	P		D01		1		1=4/8	50
BUS D03 (1)	H	D03H2		1=02 *	P		D01		2		1	50
BUS D03 (1)	H	D04H2		1=03 *	P		D01					50
BUS D03 (1)	H			1							2=4/8 1400000000	50
BUS D04	L	A01K1		1=01 *	P		D02		2		2	51
BUS D04	L	A04E1		1=02 *			D02		1		9=5/8	51
BUS D04	L	D04R1		1=03 *			D01					51
BUS D04	L			1							11=5/8 1400000000	51
BUS D04 (1)	H	D01J2		1=01 *	P		D01		1		1=4/8	52
BUS D04 (1)	H	D03J2		1=02 *	P		D01		2		1	52
BUS D04 (1)	H	D04J2		1=03 *	P		D01					52
BUS D04 (1)	H			1							2=4/8 1400000000	52

RUN NAME	A/P	PIN NAME	ORDER PIN	BAY = ORDER	Q	DRAW OPT	RV	RG	Y	X	Z	REMARKS	NC FLAG	LENGTH	EXCEPTIONS	RUN NUMBER
BUS D05	L	A01F2		1-01 *	P		D02				2		2			53
BUS D05	L	A04F2		1-02 *			D02				1		6-1/8			53
BUS D05	L	C04H1		1-03 *			D01									53
BUS D05	L			1									8-1/8	1400000000		53
BUS D05 (1)	H	D01K2		1-01 *	P		D01				1		1-4/8			54
BUS D05 (1)	H	D03K2		1-02 *	P		D01				2		1			54
BUS D05 (1)	H	D04K2		1-03 *	P		D01									54
BUS D05 (1)	H			1									2-4/8	1400000000		54
BUS D06	L	A01F1		1-01 *	P		D02				2		2			55
BUS D06	L	A04F1		1-02 *			D02				1		6-1/8			55
BUS D06	L	C04K2		1-03 *			D01									55
BUS D06	L			1									8-1/8	1400000000		55
BUS D06 (1)	H	D01L2		1-01 *	P		D01				1		1-4/8			56
BUS D06 (1)	H	D03L2		1-02 *	P		D01				2		1			56
BUS D06 (1)	H	D04L2		1-03 *	P		D01									56
BUS D06 (1)	H			1									2-4/8	1400000000		56
BUS D07	L	A01H2		1-01 *	P		D02				2		2			57
BUS D07	L	A04H2		1-02 *			D02				1		5-7/8			57
BUS D07	L	C04J1		1-03 *			D01									57
BUS D07	L			1									7-7/8	1400000000		57
BUS D07 (1)	H	D01M2		1-01 *	P		D01				1		1-4/8			58
BUS D07 (1)	H	D03M2		1-02 *	P		D01				2		1			58
BUS D07 (1)	H	D04M2		1-03 *	P		D01									58
BUS D07 (1)	H			1									2-4/8	1400000000		58
BUS D08	L	A01H1		1-01 *	P		D02				2		2			59
BUS D08	L	A04H1		1-02 *			D02				1		6-5/8			59
BUS D08	L	C04N2		1-03 *			D01									59
BUS D08	L			1									8-5/8	1400000000		59
BUS D08 (1)	H	D01N2		1-01 *	P		D01				1		1-4/8			60
BUS D08 (1)	H	D03N2		1-02 *	P		D01				2		1			60
BUS D08 (1)	H	D04N2		1-03 *	P		D01									60
BUS D08 (1)	H			1									2-4/8	1400000000		60
BUS D09	L	A01J2		1-01 *	P		D02				2		2			61
BUS D09	L	A04J2		1-02 *			D02				1		6-3/8			61
BUS D09	L	C04M1		1-03 *			D01									61
BUS D09	L			1									8-3/8	1400000000		61
BUS D09 (1)	H	D01P2		1-01 *	P		D01				1		1-4/8			62
BUS D09 (1)	H	D03P2		1-02 *	P		D01				2		1			62
BUS D09 (1)	H	D04P2		1-03 *	P		D01									62
BUS D09 (1)	H			1									2-4/8	1400000000		62
BUS D10	L	A01J1		1-01 *	P		D02				2		2			63
BUS D10	L	A04J1		1-02 *			D02				1		6-3/8			63
BUS D10	L	C04P2		1-03 *			D01									63
BUS D10	L			1									8-3/8	1400000000		63

RUN NAME	A/P	PIN NAME	ORDER PIN	BAY = ORDER	Q	DRAW OPT	RV	RG	Y	X	Z	REMARKS	NC FLAG	LENGTH	EXCEPTIONS	RUN NUMBER
BUS D10 (1)	H	D01R2		1-01 *	P		D01				1		1-4/8			64
BUS D10 (1)	H	D03R2		1-02 *	P		D01				2		1			64
BUS D10 (1)	H	D04R2		1-03 *	P		D01									64
BUS D10 (1)	H			1									2-4/8	1400000000		64
BUS D11	L	A01K2		1-01 *	P		D02				2		2			65
BUS D11	L	A04K2		1-02 *			D02				1		6-1/8			65
BUS D11	L	C04N1		1-03 *			D01									65
BUS D11	L			1									8-1/8	1400000000		65
BUS D11 (1)	H	D01S2		1-01 *	P		D01				1		1-4/8			66
BUS D11 (1)	H	D03S2		1-02 *	P		D01				2		1			66
BUS D11 (1)	H	D04S2		1-03 *	P		D01									66
BUS D11 (1)	H			1									2-4/8	1400000000		66
BUS D12	L	A01K1		1-01 *	P		D02				2		2			67
BUS D12	L	A04K1		1-02 *			D02				1		7-4/8			67
BUS D12	L	D04A1		1-03 *			D01									67
BUS D12	L			1									9-4/8	1400000000		67
BUS D12 (1)	H	D01T2		1-01 *	P		D01				1		1-4/8			68
BUS D12 (1)	H	D03T2		1-02 *	P		D01				2		1			68
BUS D12 (1)	H	D04T2		1-03 *	P		D01									68
BUS D12 (1)	H			1									2-4/8	1400000000		68
BUS D13	L	A01L2		1-01 *	P		D02				2		2			69
BUS D13	L	A04L2		1-02 *			D02				1		6-7/8			69
BUS D13	L	C04V1		1-03 *			D01									69
BUS D13	L			1									8-7/8	1400000000		69
BUS D13 (1)	H	D01U2		1-01 *	P		D01				1		1-4/8			70
BUS D13 (1)	H	D03U2		1-02 *	P		D01				2		1			70
BUS D13 (1)	H	D04U2		1-03 *	P		D01									70
BUS D13 (1)	H			1									2-4/8	1400000000		70
BUS D14	L	A01L1		1-01 *	P		D02				2		2			71
BUS D14	L	A04L1		1-02 *			D02				1		6-3/8			71
BUS D14	L	C04S2		1-03 *			D01									71
BUS D14	L			1									8-3/8	1400000000		71
BUS D14 (1)	H	D01V2		1-01 *	P		D01				1		1-4/8			72
BUS D14 (1)	H	D03V2		1-02 *	P		D01				2		1			72
BUS D14 (1)	H	D04V2		1-03 *	P		D01									72
BUS D14 (1)	H			1									2-4/8	1400000000		72
BUS D15	L	A01M2		1-01 *	P		D02				2		2			73
BUS D15	L	A04M2		1-02 *			D02				1		7-3/8			73
BUS D15	L	D04B1		1-03 *			D01									73
BUS D15	L			1									9-3/8	1400000000		73
BUS D15 (1)	H	D01V1		1-01 *	P		D01				1		1-4/8			74
BUS D15 (1)	H	D03V1		1-02 *	P		D01				2		1			74
BUS D15 (1)	H	D04V1		1-03 *	P		D01									74
BUS D15 (1)	H			1									2-4/8	1400000000		74

RUN NAME	A/P	PIN NAME	ORDER PIN	BAY = ORDER	Q	DRAW OPT	RV RG Y	X	Z	REMARKS	NC FLAG	LENGTH EXCEPTIONS	RUN NUMBER
BUS D16	L	A01M1		1=01 *	P		D02		2			2	75
BUS D16	L	A04M1		1=02 *			D02		1			5=1/8	75
BUS D16	L	C03C1		1=03 *									75
BUS D16	L			1								7=1/8 1400000000	75
BUS D17	L	A01N2		1=01 *	P		D02		2			2	76
BUS D17	L	A04N2		1=02 *			D02		1			5=1/8	76
BUS D17	L	C03B1		1=03 *									76
BUS D17	L			1								7=1/8 1400000000	76
BUS DC LO	L	A03S2		1=01 *			D02		1			2=5/8	77
BUS DC LO	L	B03F2		1=02 *					2			2	77
BUS DC LO	L	B01F2		1=03 *			D02		1			2=5/8	77
BUS DC LO	L	C01P1		1=04 *			D01						77
BUS DC LO	L			1								7=2/8 1400000000	77
BUS INIT	L	A04A1		1=01 *	P		D02		2			2	78
BUS INIT	L	A01A1		1=02 *	H		D02		1			6	78
BUS INIT	L	C01C1		1=03 *									78
BUS INIT	L			1								8=0/8 1400000000	78
BUS INTR	L	A01B1		1=01 *	P		D02		2			2	79
BUS INTR	L	A04B1		1=02 *	H		D02		1			10=1/8	79
BUS INTR	L	D04S1		1=03 *			D01						79
BUS INTR	L			1								12=1/8 1400000000	79
BUS MSYN	L	B01V1		1=01 *	P		D02		2			2	80
BUS MSYN	L	B04V1		1=02 *	H		D02		1			8=1/8	80
BUS MSYN	L	E04T2		1=03 *			D01						80
BUS MSYN	L			1								10=1/8 1400000000	80
BUS NPG IN	H	A01U1		1=01 *	H		D02		1			10=7/8	81
BUS NPG IN	H	E04D1		1=02 *			D01						81
BUS NPG IN	H			1								10=7/8 1400000000	81
BUS NPG OUT	H	A04U1		1=01 *	H		D02		1			11	82
BUS NPG OUT	H	E04U1		1=02 *			D01						82
BUS NPG OUT	H			1								11=0/8 1400000000	82
BUS NPR	L	A01S2		1=01 *	P		D02		2			2	83
BUS NPR	L	A04S2		1=02 *	H		D02		1			11=1/8	83
BUS NPR	L	E04S1		1=03 *			D01						83
BUS NPR	L			1								13=1/8 1400000000	83
BUS SACK	L	A01R2		1=01 *	P		D02		2			2	84
BUS SACK	L	A04R2		1=02 *	H		D02		1			9=7/8	84
BUS SACK	L	E04C1		1=03 *			D01						84
BUS SACK	L			1								11=7/8 1400000000	84
BUS SSYN	L	B01U1		1=01 *	P		D02		2			2	85
BUS SSYN	L	B04U1		1=02 *	H		D02		1			7=6/8	85
BUS SSYN	L	E04P1		1=03 *			D01						85
BUS SSYN	L			1								9=6/8 1400000000	85

RUN NAME	A/P	PIN NAME	ORDER PIN	BAY = ORDER	Q	DRAW OPT	RV RG Y	X	Z	REMARKS	NC FLAG	LENGTH EXCEPTIONS	RUN NUMBER
CLK	H	C02N2		1=01 *					1			5=5/8	86
CLK	H	E01E1		1=02 *	P		D01		2			1=7/8	86
CLK	H	F03D2		1=03 *	P		D01						86
CLK	H			1								7=4/8 1400000000	86
CLR MSR	L	F01F2		1=01 *	P		D01		1			1	87
CLR MSR	L	F02F2		1=02 *	P		D01						87
CLR MSR	L			1								1=0/8 1400000000	87
COUNT SA	H	C01M1		1=01 *	P		D01		1			1=4/8	88
COUNT SA	H	C03M1		1=02 *	P		D01						88
COUNT SA	H			1								1=4/8 1400000000	88
CYL OVF	L	C02R2		1=01 *	P		D01		1			1	89
CYL OVF	L	C03R2		1=02 *	P		D01						89
CYL OVF	L			1								1=0/8 1400000000	89
DATA (1)	H	F03H1		1=01 *			D02		1			4	90
DATA (1)	H	C03S1		1=02 *	P		D01		2			1	90
DATA (1)	H	C02S1		1=03 *	P		D01		1			1	90
DATA (1)	H	C01S1		1=04 *	P		D01						90
DATA (1)	H			1								6=0/8 1400000000	90
DATA STB 1	L	F04N2				P	D01					1=PIN RUN	91
DATA STB 2	L	F03L2		1=01 *	P		D01		1			1	92
DATA STB 2	L	F04L2		1=02 *	P		D01						92
DATA STB 2	L			1								1=0/8 1400000000	92
DISK CLK	L	F01V1		1=01 *	P		D01		1			1	93
DISK CLK	L	F02V1		1=02 *	P		D01						93
DISK CLK	L			1								1=0/8 1400000000	93
DLT (1)	H	F01P1		1=01 *	P		D01		1			1=6/8	94
DLT (1)	H	F03P2		1=02 *	P		D01						94
DLT (1)	H			1								1=6/8 1400000000	94
DPL (1)	H	F01D1		1=01 *	P		D01		1			1	95
DPL (1)	H	F02D1		1=02 *	P		D01						95
DPL (1)	H			1								1=0/8 1400000000	95
DR BUS ADD ACK	L	A02R2		1=01 *			D02		1			7=1/8	96
DR BUS ADD ACK	L	D02B1		1=02 *			D01						96
DR BUS ADD ACK	L			1								7=1/8 1400000000	96
DR BUS CYL ADD 0	L	A02K1		1=01 *			D02		1			5=6/8	97
DR BUS CYL ADD 0	L	C02K1		1=02 *			D01						97
DR BUS CYL ADD 0	L			1								5=6/8 1400000000	97
DR BUS CYL ADD 1	L	A02D1		1=01 *			D02		1			5=6/8	98
DR BUS CYL ADD 1	L	C02D1		1=02 *			D01						98
DR BUS CYL ADD 1	L			1								5=6/8 1400000000	98
DR BUS CYL ADD 2	L	A02L1		1=01 *			D02		1			5=6/8	99
DR BUS CYL ADD 2	L	C02L1		1=02 *			D01						99
DR BUS CYL ADD 2	L			1								5=6/8 1400000000	99

RK11D.H
RUN NAME

WPP288.V34(63)=1 23-AUG-76

X	Z	REMARKS 1-Nov-76	15116 PAGE 10 NC LENGTH EXCEPTIONS FLAG	A/P	PIN NAME	ORDER PIN	BAY - G ORDER	DRAW OPT	RV RG	RUN NUMBER
	1	DR RUS CYL ADD 3	5-6/8	L	A02C1	1-01 *		D02		100
		DR RUS CYL ADD 3		L	C02C1	1-02 *		D01		100
		DR RUS CYL ADD 3	5-6/8 140000000	L		1				100
	1	DR RUS CYL ADD 4	5-6/8	L	A02F1	1-01 *		D02		101
		DR RUS CYL ADD 4		L	C02F1	1-02 *		D01		101
		DR RUS CYL ADD 4	5-6/8 140000000	L		1				101
	1	DR RUS CYL ADD 5	5-6/8	L	A02J1	1-01 *		D02		102
		DR RUS CYL ADD 5		L	C02J1	1-02 *		D01		102
		DR RUS CYL ADD 5	5-6/8 140000000	L		1				102
	1	DR RUS CYL ADD 6	5-6/8	L	A02E1	1-01 *		D02		103
		DR RUS CYL ADD 6		L	C02E1	1-02 *		D01		103
		DR RUS CYL ADD 6	5-6/8 140000000	L		1				103
	1	DR RUS CYL ADD 7	5-6/8	L	A02H1	1-01 *		D02		104
		DR RUS CYL ADD 7		L	C02H1	1-02 *		D01		104
		DR RUS CYL ADD 7	5-6/8 140000000	L		1				104
	1	DR RUS CYL ADD 8	5-6/8	L	A02B1	1-01 *		D02		105
		DR RUS CYL ADD 8		L	C02B1	1-02 *		D01		105
		DR RUS CYL ADD 8	5-6/8 140000000	L		1				105
	2	DR RUS DC LO	2-7/8	L	C01B2	1-01 *		D02		106
	1	DR RUS DC LO	5-6/8	L	A02F2	1-02 *		D01		106
		DR RUS DC LO	8-5/8 140000000	L	D02F2	1-03 *				106
	1	DR RUS DPY	5-6/8	L	A02J1	1-01 *		D02		107
		DR RUS DPY		L	D02N1	1-02 *		D01		107
		DR RUS DPY	5-6/8 140000000	L		1				107
	1	DR RUS INDX PLS	5-6/8	L	A02M1	1-01 *		D02		108
		DR RUS INDX PLS		L	D02M1	1-02 *		D01		108
		DR RUS INDX PLS	5-6/8 140000000	L		1				108
	1	DR RUS LOG ADD INT	7-1/8	L	A02J2	1-01 *		D02		109
		DR RUS LOG ADD INT		L	D02D1	1-02 *		D01		109
		DR RUS LOG ADD INT	7-1/8 140000000	L		1				109
	1	DR RUS P/W/S RDY	5-6/8	L	A02H2	1-01 *		D02		110
		DR RUS P/W/S RDY		L	C02H2	1-02 *		D01		110
		DR RUS P/W/S RDY	5-6/8 140000000	L		1				110
	1	DR RUS RD CLK	5-6/8	L	A02S1	1-01 *		D02		111
		DR RUS RD CLK		L	D02S1	1-02 *		D01		111
		DR RUS RD CLK	5-6/8 140000000	L		1				111
	1	DR RUS RD DATA	5-6/8	L	A02S2	1-01 *		D02		112
		DR RUS RD DATA		L	C02S2	1-02 *		D01		112
		DR RUS RD DATA	5-6/8 140000000	L		1				112

RK11D.H
RUN NAME

WPP288.V34(63)=1 23-AUG-76

X	Z	REMARKS 1-Nov-76	15116 PAGE 11 NC LENGTH EXCEPTIONS FLAG	A/P	PIN NAME	ORDER PIN	BAY - G ORDER	DRAW OPT	RV RG	RUN NUMBER
	1	DR RUS RD GATE	5-6/8	L	A02R1	1-01 *		D02		113
		DR RUS RD GATE		L	D02P1	1-02 *		D01		113
		DR RUS RD GATE	5-6/8 140000000	L		1				113
	1	DR RUS RESTORE	5-6/8	L	A02K1	1-01 *		D02		114
		DR RUS RESTORE		L	C02M1	1-02 *		D01		114
		DR RUS RESTORE	5-6/8 140000000	L		1				114
	1	DR RUS RWS	5-6/8	L	A02F2	1-01 *		D02		115
		DR RUS RWS		L	D02F2	1-02 *		D01		115
		DR RUS RWS	5-6/8 140000000	L		1				115
	1	DR RUS SEC CNTR 0	5-6/8	L	A02L1	1-01 *		D02		116
		DR RUS SEC CNTR 0		L	D02L1	1-02 *		D01		116
		DR RUS SEC CNTR 0	5-6/8 140000000	L		1				116
	1	DR RUS SEC CNTR 1	7-1/8	L	A02P2	1-01 *		D02		117
		DR RUS SEC CNTR 1		L	D02A1	1-02 *		D01		117
		DR RUS SEC CNTR 1	7-1/8 140000000	L		1				117
	1	DR RUS SEC CNTR 2	5-6/8	L	A02K2	1-01 *		D02		118
		DR RUS SEC CNTR 2		L	D02K2	1-02 *		D01		118
		DR RUS SEC CNTR 2	5-6/8 140000000	L		1				118
	1	DR RUS SEC CNTR 3	5-6/8	L	A02J1	1-01 *		D02		119
		DR RUS SEC CNTR 3		L	D02J1	1-02 *		D01		119
		DR RUS SEC CNTR 3	5-6/8 140000000	L		1				119
	1	DR RUS SEC PLS	5-6/8	L	A02N2	1-01 *		D02		120
		DR RUS SEC PLS		L	D02N2	1-02 *		D01		120
		DR RUS SEC PLS	5-6/8 140000000	L		1				120
	1	DR RUS SEL DR 0	5-6/8	L	A02J2	1-01 *		D02		121
		DR RUS SEL DR 0		L	C02J2	1-02 *		D01		121
		DR RUS SEL DR 0	5-6/8 140000000	L		1				121
	1	DR RUS SEL DR 1	5-6/8	L	A02K2	1-01 *		D02		122
		DR RUS SEL DR 1		L	C02K2	1-02 *		D01		122
		DR RUS SEL DR 1	5-6/8 140000000	L		1				122
	1	DR RUS SEL DR 2	5-6/8	L	A02L2	1-01 *		D02		123
		DR RUS SEL DR 2		L	C02L2	1-02 *		D01		123
		DR RUS SEL DR 2	5-6/8 140000000	L		1				123
	1	DR RUS SEL UPPER HD	5-6/8	L	A02M2	1-01 *		D02		124
		DR RUS SEL UPPER HD		L	D02M2	1-02 *		D01		124
		DR RUS SEL UPPER HD	5-6/8 140000000	L		1				124
	1	DR RUS STA	7-1/8	L	A02S2	1-01 *		D02		125
		DR RUS STA		L	D02C1	1-02 *				125
		DR RUS STA	7-1/8 140000000	L		1				125
	1	DR RUS STROBE	5-6/8	L	A02H1	1-01 *		D02		126
		DR RUS STROBE		L	D02H1	1-02 *		D01		126
		DR RUS STROBE	5-6/8 140000000	L		1				126

RUN NAME	A/P	PIN NAME	ORDER PIN	BAY = ORDER	Q	DRAW OPT	RV RG Y	X	Z	REMARKS	NC LENGTH EXCEPTIONS FLAG	RUN NUMBER
DR BUS AT CHK	L	B02K1		1=01 *			D02		1		5=6/8	127
DR BUS AT CHK	L	D02K1		1=02 *			D01					127
DR BUS AT CHK	L			1							5=6/8 1400000000	127
DR BUS AT DATA*CLK	L	A02F2		1=01 *			D02		1		5=6/8	128
DR BUS AT DATA*CLK	L	C02F2		1=02 *			D01					128
DR BUS AT DATA*CLK	L			1							5=6/8 1400000000	128
DR BUS AT GATE	L	B02L2		1=01 *			D02		1		5=6/8	129
DR BUS AT GATE	L	D02L2		1=02 *			D01					129
DR BUS AT GATE	L			1							5=6/8 1400000000	129
DR BUS AT PRCT STATUS	L	B02P1		1=01 *			D02		1		5=6/8	130
DR BUS AT PRCT STATUS	L	D02P1		1=02 *			D01					130
DR BUS AT PRCT STATUS	L			1							5=6/8 1400000000	130
DR BUS AT PROTECT	L	B02R2		1=01 *			D02		1		5=6/8	131
DR BUS AT PROTECT	L	D02R2		1=02 *			D01					131
DR BUS AT PROTECT	L			1							5=6/8 1400000000	131
DRE (1)	H	F01R1		1=01 *	P		D01		1		1	132
DRE (1)	H	F02R1		1=02 *	P		D01					132
DRE (1)	H			1							1=0/8 1400000000	132
DRIVE OK	H	F01N1		1=01 *	P		D01		1		1	133
DRIVE OK	H	F02N1		1=02 *	P		D01					133
DRIVE OK	H			1							1=0/8 1400000000	133
DRIVE RESET	L	F01K2		1=01 *	P		D01		1		1	134
DRIVE RESET	L	F02K2		1=02 *	P		D01					134
DRIVE RESET	L			1							1=0/8 1400000000	134
DRIVE UNSAFE	H	F01R1		1=01 *	P		D01		1		1	135
DRIVE UNSAFE	H	F02R1		1=02 *	P		D01					135
DRIVE UNSAFE	H			1							1=0/8 1400000000	135
DRY	H	F01L2		1=01 *	P		D01		1		1	136
DRY	H	F02L2		1=02 *	P		D01					136
DRY	H			1							1=0/8 1400000000	136
END OF SYNC	L	F01R2		1=01 *	P		D01		1		1	137
END OF SYNC	L	F02R2		1=02 *	P		D01					137
END OF SYNC	L			1							1=0/8 1400000000	137
EX BIT	H	F01V2		1=01 *	P		D01		1		1	138
EX BIT	H	F02V2		1=02 *	P		D01					138
EX BIT	H			1							1=0/8 1400000000	138
FILE DONE	H	C01F1		1=01 *	P				1		1=4/8	139
FILE DONE	H	C03F1		1=02 *	P							139
FILE DONE	H			1							1=4/8 1400000000	139
FILE EMPTY	H	B03E1		1=01 *			D02		1		4=1/8	140
FILE EMPTY	H	C03N2		1=02 *								140
FILE EMPTY	H			1							4=1/8 1400000000	140

RUN NAME	A/P	PIN NAME	ORDER PIN	BAY = ORDER	Q	DRAW OPT	RV RG Y	X	Z	REMARKS	NC LENGTH EXCEPTIONS FLAG	RUN NUMBER
FILE FULL	H	B03M1		1=01 *			D02		1		3=1/8	141
FILE FULL	H	C03M2		1=02 *								141
FILE FULL	H			1							3=1/8 1400000000	141
FIRST SEEK DONE	H	F01U2		1=01 *	P		D01		1		1	142
FIRST SEEK DONE	H	F02U2		1=02 *	P		D01					142
FIRST SEEK DONE	H			1							1=0/8 1400000000	142
FMT (1)	H	C01D1		1=01 *	P		D01		2		1	143
FMT (1)	H	C02N1		1=02 *	P		D01		1		1	143
FMT (1)	H	C03N1		1=03 *	P		D01					143
FMT (1)	H			1							2=0/8 1400000000	143
GATE DATA TO BUS D	L	C02A1		1=01 *	P		D01		2		1	144
GATE DATA TO BUS D	L	C03A1		1=02 *	P		D01		1		1	144
GATE DATA TO BUS D	L	C04A1		1=03 *	P		D01					144
GATE DATA TO BUS D	L			1							2=0/8 1400000000	144
GEN CLR	L	E01R2		1=01 *	P		D01		2		1	145
GEN CLR	L	F02R2		1=02 *			D01		1		6=1/8	145
GEN CLR	L	C03P2		1=03 *								145
GEN CLR	L			1							7=1/8 1400000000	145
GEN DATA	H	F01E2		1=01 *	P		D01		1		1	146
GEN DATA	H	F02E2		1=02 *	P		D01					146
GEN DATA	H			1							1=0/8 1400000000	146
GND 01		C01A1		1=01 *	1				1		0=4/8	147
GND 01		C01C2		1=02 *	P		D02		2		5=7/8	147
GND 01		A01B2		1=03 *	P		D02		1		0=1/8	147
GND 01		A01C2		1=04 *	P		D02		2		1=5/8	147
GND 01		A01N1		1=05 *	P		D02		1		0=1/8	147
GND 01		A01P1		1=06 *	P		D02		2		0=1/8	147
GND 01		A01R1		1=07 *	P		D02		1		0=1/8	147
GND 01		A01S1		1=08 *	P		D02		2		0=1/8	147
GND 01		A01T1		1=09 *	P		D02		1		0=1/8	147
GND 01		A01V2		1=10 *	P		D02		2		0=4/8	147
GND 01		B01B2		1=11 *	P		D02		1		1=2/8	147
GND 01		B01C2		1=12 *	P		D02		2		0=1/8	147
GND 01		B01D1		1=13 *	P		D02		1		0=1/8	147
GND 01		B01E1		1=14 *	P		D02		2		0=1/8	147
GND 01		B01T1		1=15 *	P		D02		1		1=7/8	147
GND 01		B01V2		1=16 *	P		D02		2		0=4/8	147
GND 01		C01T1		1=17 *	P		D01		1		2=7/8	147
GND 01		D01C2		1=18 *	P		D01		2		1=5/8	147
GND 01		D01T1		1=19 *	P		D01		1		2=1/8	147
GND 01		E01C2		1=20 *	P		D01		2		1=3/8	147
GND 01		E01T1		1=21 *	P		D01		1		2=1/8	147
GND 01		F01C2		1=22 *	P		D01		2		1=5/8	147
GND 01		F01T1		1=23 *	P		D01				2=1/8	147
GND 01				1								147
											27=0/8 1400000000	147

RUN NAME	A/P	PIN NAME	ORDER PIN	BAY = ORDER	Q	DRAW OPT	RV RG Y	X	Z	REMARKS	NC FLAG	LENGTH	EXCEPTIONS	RUN NUMBER
GND 02		A02B2		1-01 *	P		D02		2		0	1/8		148
GND 02		A02C2		1-02 *	P		D02		1		1	5/8		148
GND 02		A02N1		1-03 *	P		D02		2		0	1/8		148
GND 02		A02P1		1-04 *	P		D02		1		0	1/8		148
GND 02		A02R1		1-05 *	P		D02		2		0	1/8		148
GND 02		A02S1		1-06 *	P		D02		1		0	1/8		148
GND 02		A02T1		1-07 *	P		D02		2		0	4/8		148
GND 02		A02V2		1-08 *	P		D02		1		0	5/8		148
GND 02		A02U1		1-09 *	P				2		1	5/8		148
GND 02		B02B2		1-10 *	P		D02		1		0	1/8		148
GND 02		B02C2		1-11 *	P		D02		2		0	1/8		148
GND 02		B02D1		1-12 *	P		D02		1		0	1/8		148
GND 02		B02E1		1-13 *	P		D02		2		1	7/8		148
GND 02		B02T1		1-14 *	P		D02		1		0	4/8		148
GND 02		B02V2		1-15 *	P		D02		2		1	1/8		148
GND 02		C02C2		1-16 *	P		D01		1		2	1/8		148
GND 02		C02T1		1-17 *	P		D01		2		1	5/8		148
GND 02		D02C2		1-18 *	P		D01		1		2	1/8		148
GND 02		D02T1		1-19 *	P		D01		2		1	3/8		148
GND 02		E02C2		1-20 *	P		D01		1		2	1/8		148
GND 02		E02T1		1-21 *	P		D01		2		1	5/8		148
GND 02		F02C2		1-22 *	P		D01		1		2	1/8		148
GND 02		F02T1		1-23 *	P		D01							148
GND 02				1							22-0/8		1400000000	148
GND 03		A03C2		1-01 *	P		D02		1		0	1/8		149
GND 03		A03D2		1-02 *	P		D02		2		0	1/8		149
GND 03		A03E2		1-03 *	P		D02		1		0	1/8		149
GND 03		A03F2		1-04 *	P		D02		2		1	3/8		149
GND 03		A03N1		1-05 *	P		D02		1		0	1/8		149
GND 03		A03P1		1-06 *	P		D02		2		0	1/8		149
GND 03		A03R1		1-07 *	P		D02		1		0	1/8		149
GND 03		A03S1		1-08 *	P		D02		2		0	1/8		149
GND 03		A03T1		1-09 *	P		D02		1		0	1/8		149
GND 03		A03U1		1-10 *	P		D02		2		0	1/8		149
GND 03		A03V1		1-11 *	P				1		1	3/8		149
GND 03		B03C2		1-12 *	P		D02		2		2	1/8		149
GND 03		B03T1		1-13 *	P		D02		1		1	3/8		149
GND 03		C03C2		1-14 *	P		D01		2		2	1/8		149
GND 03		C03T1		1-15 *	P		D01		1		1	5/8		149
GND 03		D03C2		1-16 *	P		D01		2		2	1/8		149
GND 03		D03T1		1-17 *	P		D01		1		1	3/8		149
GND 03		E03C2		1-18 *	P		D01		2		2	1/8		149
GND 03		E03T1		1-19 *	P		D01		1		1	5/8		149
GND 03		F03C2		1-20 *	P		D01		2		2	1/8		149
GND 03		F03T1		1-21 *	P		D01							149
GND 03				1							20-4/8		1400000000	149

RUN NAME	A/P	PIN NAME	ORDER PIN	BAY = ORDER	Q	DRAW OPT	RV RG Y	X	Z	REMARKS	NC FLAG	LENGTH	EXCEPTIONS	RUN NUMBER
GND 04		A04B2		1-01 *	P		D02		1		0	1/8		150
GND 04		A04C2		1-02 *	P		D02		2		1	5/8		150
GND 04		A04N1		1-03 *	P		D02		1		0	1/8		150
GND 04		A04P1		1-04 *	P		D02		2		0	1/8		150
GND 04		A04R1		1-05 *	P		D02		1		0	1/8		150
GND 04		A04S1		1-06 *	P		D02		2		0	1/8		150
GND 04		A04T1		1-07 *	P		D02		1		0	4/8		150
GND 04		A04V2		1-08 *	P		D02		2		1	2/8		150
GND 04		B04B2		1-09 *	P		D02		1		0	1/8		150
GND 04		B04C2		1-10 *	P		D02		2		0	1/8		150
GND 04		B04D1		1-11 *	P		D02		1		0	1/8		150
GND 04		B04E1		1-12 *	P		D02		2		1	7/8		150
GND 04		B04T1		1-13 *	P		D02		1		0	4/8		150
GND 04		B04V2		1-14 *	P		D02		2		1	1/8		150
GND 04		C04C2		1-15 *	P		D01		1		2	1/8		150
GND 04		C04T1		1-16 *	P		D01		2		1	5/8		150
GND 04		D04C2		1-17 *	P		D01		1		2	1/8		150
GND 04		D04T1		1-18 *	P		D01		2		1	3/8		150
GND 04		E04C2		1-19 *	P		D01		1		2	1/8		150
GND 04		E04T1		1-20 *	P		D01		2		1	5/8		150
GND 04		F04C2		1-21 *	P		D01		1		2	1/8		150
GND 04		F04T1		1-22 *	P		D01							150
GND 04				1							21-0/8		1400000000	150
HE (1)	H	B03E2		1-01 *			D02		1		12-5/8			151
HE (1)	H	F02T2		1-02 *	P		D01		2		1			151
HE (1)	H	F01T2		1-03 *	P		D01							151
HE (1)	H			1							13-5/8		1400000000	151
HEAD + CHK SUM	H	F01P2		1-01 *	P		D01		1		1			152
HEAD + CHK SUM	H	F02P2		1-02 *	P		D01							152
HEAD + CHK SUM	H			1							1-0/8		1400000000	152
HEAD OK (1)	L	F01U2		1-01 *	P		D01		1		1			153
HEAD OK (1)	L	F02U2		1-02 *	P		D01							153
HEAD OK (1)	L			1							1-0/8		1400000000	153
HEADER (1)	H	C01U1		1-01 *	P		D01		1		1-4/8			154
HEADER (1)	H	C03U1		1-02 *	P		D01							154
HEADER (1)	H			1							1-4/8		1400000000	154
IBA (0)	H	E01K2		1-01 *	P		D01		1		1-4/8			155
IBA (0)	H	E03K2		1-02 *	P		D01							155
IBA (0)	H			1							1-4/8		1400000000	155
ID 0 (1)	H	F01E1		1-01 *	P		D01		1		1			156
ID 0 (1)	H	F02E1		1-02 *	P		D01							156
ID 0 (1)	H			1							1-0/8		1400000000	156
ID 1 (1)	H	F01F1		1-01 *	P		D01		1		1			157
ID 1 (1)	H	F02F1		1-02 *	P		D01							157
ID 1 (1)	H			1							1-0/8		1400000000	157
ID 2 (1)	H	F01H1		1-01 *	P		D01		1		1			158
ID 2 (1)	H	F02H1		1-02 *	P		D01							158
ID 2 (1)	H			1							1-0/8		1400000000	158

RUN NAME	A/P	PIN NAME	ORDER PIN	BAY = ORDER	Q	DRAW OPT	RV RG Y	X	Z	REMARKS	NC LENGTH EXCEPTIONS FLAG	RUN NUMBER
IDE (1)	H	E01A1		1-01 *	P		D01		1		1-5/8	159
IDE (1)	H	D02V2		1-02 *	P		D01		2		1-2/8	159
IDE (1)	H	E04A1		1-03 *	P		D01					159
IDE (1)	H			1							2-7/8 1400000000	159
ILLEGAL ADD	H	F01K1		1-01 *	P		D01		1		1	160
ILLEGAL ADD	H	F02K1		1-02 *	P		D01					160
ILLEGAL ADD	H			1							1-0/8 1400000000	160
IN BUFF FULL (1)	H	F03J2		1-01 *			D02		1		3-1/8	161
IN BUFF FULL (1)	H	C03K2		1-02 *								161
IN BUFF FULL (1)	H			1							3-1/8 1400000000	161
INIT	H	E01T2		1-01 *	P		D01		2		1	162
INIT	H	E02T2		1-02 *	P		D01		1		1	162
INIT	H	E03T2		1-03 *	P		D01					162
INIT	H			1							2-0/8 1400000000	162
INIT	L	F01A1		1-01 *	P		D01		2		1	163
INIT	L	F02A1		1-02 *	P		D01		1		1	163
INIT	L	F03A1		1-03 *	P		D01		2		1	163
INIT	L	F04A1		1-04 *	P		D01					163
INIT	L			1							3-0/8 1400000000	163
INT BUS A00 (1)	H	D01A1		1-01 *	P		D01		1		1-4/8	164
INT BUS A00 (1)	H	D03A1		1-02 *	P		D01					164
INT BUS A00 (1)	H			1							1-4/8 1400000000	164
INT BUS A01 (1)	H	D01B1		1-01 *	P		D01		1		1-4/8	165
INT BUS A01 (1)	H	D03B1		1-02 *	P		D01					165
INT BUS A01 (1)	H			1							1-4/8 1400000000	165
INT BUS A02 (1)	H	D01C1		1-01 *	P		D01		1		1-4/8	166
INT BUS A02 (1)	H	D03C1		1-02 *	P		D01					166
INT BUS A02 (1)	H			1							1-4/8 1400000000	166
INT BUS A03 (1)	H	D01D1		1-01 *	P		D01		1		1-4/8	167
INT BUS A03 (1)	H	D03D1		1-02 *	P		D01					167
INT BUS A03 (1)	H			1							1-4/8 1400000000	167
INT BUS A04 (1)	H	D01E1		1-01 *	P		D01		1		1-4/8	168
INT BUS A04 (1)	H	D03E1		1-02 *	P		D01					168
INT BUS A04 (1)	H			1							1-4/8 1400000000	168
INT BUS A05 (1)	H	D01F1		1-01 *	P		D01		1		1-4/8	169
INT BUS A05 (1)	H	D03F1		1-02 *	P		D01					169
INT BUS A05 (1)	H			1							1-4/8 1400000000	169
INT BUS A06 (1)	H	D01H1		1-01 *	P		D01		1		1-4/8	170
INT BUS A06 (1)	H	D03H1		1-02 *	P		D01					170
INT BUS A06 (1)	H			1							1-4/8 1400000000	170
INT BUS A07 (1)	H	D01J1		1-01 *	P		D01		1		1-4/8	171
INT BUS A07 (1)	H	D03J1		1-02 *	P		D01					171
INT BUS A07 (1)	H			1							1-4/8 1400000000	171

RUN NAME	A/P	PIN NAME	ORDER PIN	BAY = ORDER	Q	DRAW OPT	RV RG Y	X	Z	REMARKS	NC LENGTH EXCEPTIONS FLAG	RUN NUMBER
INT BUS A08 (1)	H	D01K1		1-01 *	P		D01		1		1-4/8	172
INT BUS A08 (1)	H	D03K1		1-02 *	P		D01					172
INT BUS A08 (1)	H			1							1-4/8 1400000000	172
INT BUS A09 (1)	H	D01L1		1-01 *	P		D01		1		1-4/8	173
INT BUS A09 (1)	H	D03L1		1-02 *	P		D01					173
INT BUS A09 (1)	H			1							1-4/8 1400000000	173
INT BUS A10 (1)	H	D01M1		1-01 *	P		D01		1		1-4/8	174
INT BUS A10 (1)	H	D03M1		1-02 *	P		D01					174
INT BUS A10 (1)	H			1							1-4/8 1400000000	174
INT BUS A11 (1)	H	D01N1		1-01 *	P		D01		1		1-4/8	175
INT BUS A11 (1)	H	D03N1		1-02 *	P		D01					175
INT BUS A11 (1)	H			1							1-4/8 1400000000	175
INT BUS A12 (1)	H	D01P1		1-01 *	P		D01		1		1-4/8	176
INT BUS A12 (1)	H	D03P1		1-02 *	P		D01					176
INT BUS A12 (1)	H			1							1-4/8 1400000000	176
INT BUS A13 (1)	H	D01R1		1-01 *	P		D01		1		1-4/8	177
INT BUS A13 (1)	H	D03R1		1-02 *	P		D01					177
INT BUS A13 (1)	H			1							1-4/8 1400000000	177
INT BUS A14 (1)	H	D01S1		1-01 *	P		D01		1		1-4/8	178
INT BUS A14 (1)	H	D03S1		1-02 *	P		D01					178
INT BUS A14 (1)	H			1							1-4/8 1400000000	178
INT BUS A15(1)	H	D01U1		1-01 *	P		D02		1		1-4/8	179
INT BUS A15(1)	H	D03U1		1-02 *	P		D02					179
INT BUS A15(1)	H			1							1-4/8 1400000000	179
INT BUS D00(1)	H	F03V2		1-01 *	P		D02		1		1	180
INT BUS D00(1)	H	F04V2		1-02 *	P		D02					180
INT BUS D00(1)	H			1							1-0/8 1400000000	180
INT BUS D01(1)	H	F03U2		1-01 *	P		D02		1		1	181
INT BUS D01(1)	H	F04U2		1-02 *	P		D02					181
INT BUS D01(1)	H			1							1-0/8 1400000000	181
INT BUS D02(1)	H	F03T2		1-01 *	P		D02		1		1	182
INT BUS D02(1)	H	F04T2		1-02 *	P		D02					182
INT BUS D02(1)	H			1							1-0/8 1400000000	182
INT BUS D03(1)	H	F03S2		1-01 *	P		D02		1		1	183
INT BUS D03(1)	H	F04S2		1-02 *	P		D02					183
INT BUS D03(1)	H			1							1-0/8 1400000000	183
INT BUS D04 (1)	H	F03R2		1-01 *	P		D01		1		1	184
INT BUS D04 (1)	H	F04R2		1-02 *	P		D01					184
INT BUS D04 (1)	H			1							1-0/8 1400000000	184
INT BUS D05 (1)	H	F03P2		1-01 *	P		D01		1		1	185
INT BUS D05 (1)	H	F04P2		1-02 *	P		D01					185
INT BUS D05 (1)	H			1							1-0/8 1400000000	185

RUN NAME	A/P	PIN NAME	ORDER PIN	BAY = ORDER	Q	DRAW OPT	RV	RG	Y	X	Z	REMARKS	NC LENGTH EXCEPTIONS FLAG	RUN NUMBER
INT BUS D06 (1)	H	E03N2		1=01 *	P		D01				1		1	186
INT BUS D06 (1)	H	E04N2		1=02 *	P		D01							186
INT BUS D06 (1)	H			1									1=0/8 1400000000	186
INT BUS D07 (1)	H	E03M2		1=01 *	P		D01				1		1	187
INT BUS D07 (1)	H	E04M2		1=02 *	P		D01							187
INT BUS D07 (1)	H			1									1=0/8 1400000000	187
INT BUS D08 (1)	H	E03L2		1=01 *	P		D01				1		1	188
INT BUS D08 (1)	H	E04L2		1=02 *	P		D01							188
INT BUS D08 (1)	H			1									1=0/8 1400000000	188
INT BUS D09 (1)	H	E03K2		1=01 *	P		D01				1		1	189
INT BUS D09 (1)	H	E04K2		1=02 *	P		D01							189
INT BUS D09 (1)	H			1									1=0/8 1400000000	189
INT BUS D10 (1)	H	E03J2		1=01 *	P		D01				1		1	190
INT BUS D10 (1)	H	E04J2		1=02 *	P		D01							190
INT BUS D10 (1)	H			1									1=0/8 1400000000	190
INT BUS D11 (1)	H	E03H2		1=01 *	P		D01				1		1	191
INT BUS D11 (1)	H	E04H2		1=02 *	P		D01							191
INT BUS D11 (1)	H			1									1=0/8 1400000000	191
INT BUS D12 (1)	H	E03F2		1=01 *	P		D01				1		1	192
INT BUS D12 (1)	H	E04F2		1=02 *	P		D01							192
INT BUS D12 (1)	H			1									1=0/8 1400000000	192
INT BUS D13 (1)	H	E03E2		1=01 *	P		D01				1		1	193
INT BUS D13 (1)	H	E04E2		1=02 *	P		D01							193
INT BUS D13 (1)	H			1									1=0/8 1400000000	193
INT BUS D14 (1)	H	E03D2		1=01 *	P		D01				1		1	194
INT BUS D14 (1)	H	E04D2		1=02 *	P		D01							194
INT BUS D14 (1)	H			1									1=0/8 1400000000	194
INT BUS D15 (1)	H	E03B1		1=01 *	P		D01				1		1	195
INT BUS D15 (1)	H	E04B1		1=02 *	P		D01							195
INT BUS D15 (1)	H			1									1=0/8 1400000000	195
LAST BIT	H	E01D2		1=01 *	P		D01				1		1	196
LAST BIT	H	E02D2		1=02 *	P		D01							196
LAST BIT	H			1									1=0/8 1400000000	196
LAST SECTOR	L	C02U2		1=01 *	P		D01				1		1	197
LAST SECTOR	L	C03U2		1=02 *	P		D01							197
LAST SECTOR	L			1									1=0/8 1400000000	197
LAST WORD DONE	L	C01L1		1=01 *	P		D01				1		1=4/8	198
LAST WORD DONE	L	C03L1		1=02 *	P		D01							198
LAST WORD DONE	L			1									1=4/8 1400000000	198
LOAD RKBA HI	L	E03V2		1=01 *	P		D01				1		1	199
LOAD RKBA HI	L	E04V2		1=02 *	P		D01							199
LOAD RKBA HI	L			1									1=0/8 1400000000	199

RUN NAME	A/P	PIN NAME	ORDER PIN	BAY = ORDER	Q	DRAW OPT	RV	RG	Y	X	Z	REMARKS	NC LENGTH EXCEPTIONS FLAG	RUN NUMBER
LOAD RKBA LO	L	E03H2		1=01 *	P		D01				1		1	200
LOAD RKBA LO	L	E04H2		1=02 *	P		D01							200
LOAD RKBA LO	L			1									1=0/8 1400000000	200
LOAD RKCS HI	L	E01L1		1=01 *	P		D01				1		2	201
LOAD RKCS HI	L	E04L1		1=02 *	P		D01							201
LOAD RKCS HI	L			1									2=0/8 1400000000	201
LOAD RKCS LO	L	E01M1		1=01 *	P		D01				1		2	202
LOAD RKCS LO	L	E04M1		1=02 *	P		D01							202
LOAD RKCS LO	L			1									2=0/8 1400000000	202
LOAD RKDA HI	L	E03E2		1=01 *	P		D01				1		1	203
LOAD RKDA HI	L	E04E2		1=02 *	P		D01							203
LOAD RKDA HI	L			1									1=0/8 1400000000	203
LOAD RKDA LO	L	E03F2		1=01 *	P		D01				1		1	204
LOAD RKDA LO	L	E04F2		1=02 *	P		D01							204
LOAD RKDA LO	L			1									1=0/8 1400000000	204
LOAD RKWC HI	L	E01B1		1=01 *	P		D01				1		2	205
LOAD RKWC HI	L	E04B1		1=02 *	P		D01							205
LOAD RKWC HI	L			1									2=0/8 1400000000	205
LOAD RKWC LO	L	E01F1		1=01 *	P		D01				1		2	206
LOAD RKWC LO	L	E04F1		1=02 *	P		D01							206
LOAD RKWC LO	L			1									2=0/8 1400000000	206
M CLK	L	A02U2		1=01 *							1		6=7/8	207
M CLK	L	D02D2		1=02 *										207
M CLK	L			1									6=7/8 1400000000	207
NEW RUN	L	C01R1		1=01 *	P		D01				2		1	208
NEW RUN	L	C02R1		1=02 *	P		D01				1		1	208
NEW RUN	L	C03R1		1=03 *	P		D01							208
NEW RUN	L			1									2=0/8 1400000000	208
NPR EN (1)	H	C03V2		1=01 *							1		5=1/8	209
NPR EN (1)	H	E04M2		1=02 *										209
NPR EN (1)	H			1									5=1/8 1400000000	209
NPR REQ	H	E03J2		1=01 *	P		D01				1		1	210
NPR REQ	H	E04J2		1=02 *	P		D01							210
NPR REQ	H			1									1=0/8 1400000000	210
NXM (1)	H	E01N1		1=01 *	P		D01				1		2	211
NXM (1)	H	E04N1		1=02 *	P		D01							211
NXM (1)	H			1									2=0/8 1400000000	211
OUT BUFF FULL (1)	H	B03L2		1=01 *			D02				1		3	212
OUT BUFF FULL (1)	H	C03L2		1=02 *										212
OUT BUFF FULL (1)	H			1									3=0/8 1400000000	212

RUN NAME	A/P	PIN NAME	ORDER PIN	BAY = ORDER	Q	DRAW OPT	RV RG Y	X	Z	REMARKS	NC LENGTH EXCEPTIONS FLAG	RUN NUMBER
POLL DONE	L	F01U1		1-01 *	P		D01		1		1	213
POLL DONE	L	F02U1		1-02 *	P		D01					213
POLL DONE	L			1							1-0/8 1400000000	213
PREAMBLE (1)	H	F01M2		1-01 *	P		D01		1		1	214
PREAMBLE (1)	H	F02M2		1-02 *	P		D01					214
PREAMBLE (1)	H			1							1-0/8 1400000000	214
R/W/S RDY	H	F01P2		1-01 *	P		D01		1		1	215
R/W/S RDY	H	F02P2		1-02 *	P		D01					215
R/W/S RDY	H			1							1-0/8 1400000000	215
RD DATA=WT DATA	H	F01M1		1-01 *	P		D01		1		1	216
RD DATA=WT DATA	H	F02M1		1-02 *	P		D01					216
RD DATA=WT DATA	H			1							1-0/8 1400000000	216
RD GATE (1)	H	B03K2		1-01 *			D02		1		7-3/8	217
RD GATE (1)	H	D02T2		1-02 *								217
RD GATE (1)	H			1							7-3/8 1400000000	217
RD GATE EN	H	F01J2		1-01 *	P		D01		1		1	218
RD GATE EN	H	F02J2		1-02 *	P		D01					218
RD GATE EN	H			1							1-0/8 1400000000	218
RD HEADER (1)	H	F01L1		1-01 *	P		D01		1		1	219
RD HEADER (1)	H	F02L1		1-02 *	P		D01					219
RD HEADER (1)	H			1							1-0/8 1400000000	219
RD+RD CHK	H	B03D2		1-01 *			D02		1		3-7/8	220
RD+RD CHK	H	C03K1		1-02 *	P		D01		2		1-4/8	220
RD+RD CHK	H	C01K1		1-03 *	P		D01					220
RD+RD CHK	H			1							5-3/8 1400000000	220
READ	H	E01U1		1-01 *	P		D01		1		1-6/8	221
READ	H	E03U2		1-02 *	P		D01		2		1	221
READ	H	E04U2		1-03 *	P		D01					221
READ	H			1							2-6/8 1400000000	221
RK INT MASTER	H	D02U1		1-01 *	P		D01		1		1-4/8	222
RK INT MASTER	H	D04U1		1-02 *	P		D01					222
RK INT MASTER	H			1							1-4/8 1400000000	222
RK INT REQ	H	F02K2		1-01 *	P		D01		1		1-4/8	223
RK INT REQ	H	F04K2		1-02 *	P		D01					223
RK INT REQ	H			1							1-4/8 1400000000	223
RK NPR MASTER	H	C03J2		1-01 *					1		5-5/8	224
RK NPR MASTER	H	E04H1		1-02 *	P		D01		2		2	224
RK NPR MASTER	H	F01H1		1-03 *	P		D01					224
RK NPR MASTER	H			1							7-5/8 1400000000	224
RK05	H	F01C1		1-01 *	P		D01		1		1	225
RK05	H	F02C1		1-02 *	P		D01					225
RK05	H			1							1-0/8 1400000000	225

RUN NAME	A/P	PIN NAME	ORDER PIN	BAY = ORDER	Q	DRAW OPT	RV RG Y	X	Z	REMARKS	NC LENGTH EXCEPTIONS FLAG	RUN NUMBER
RKA 01 (1)	H	E01K1		1-01 *	P		D01		2		2	226
RKA 01 (1)	H	E04K1		1-02 *	P		D01		1		0-4/8	226
RKA 01 (1)	H	E03M2		1-03 *			D01					226
RKA 01 (1)	H			1							2-4/8 1400000000	226
RKA 02 (1)	H	E01J1		1-01 *	P		D01		1		2	227
RKA 02 (1)	H	E04J1		1-02 *	P		D01		2		1	227
RKA 02 (1)	H	E03N2		1-03 *			D01					227
RKA 02 (1)	H			1							3-0/8 1400000000	227
RKA 03 (1)	H	E03V1		1-01 *	P		D01		1		1	228
RKA 03 (1)	H	F04V1		1-02 *	P		D01					228
RKA 03 (1)	H			1							1-0/8 1400000000	228
RKBA 01 (1)	H	F03C1		1-01 *	P		D01		1		1	229
RKBA 01 (1)	H	F04C1		1-02 *	P		D01					229
RKBA 01 (1)	H			1							1-0/8 1400000000	229
RKBA 02 (1)	H	F03D1		1-01 *	P		D01		1		1	230
RKBA 02 (1)	H	F04D1		1-02 *	P		D01					230
RKBA 02 (1)	H			1							1-0/8 1400000000	230
RKBA 03 (1)	H	F03E1		1-01 *	P		D01		1		1	231
RKBA 03 (1)	H	F04E1		1-02 *	P		D01					231
RKBA 03 (1)	H			1							1-0/8 1400000000	231
RKBA 04 (1)	H	F03F1		1-01 *	P		D01		1		1	232
RKBA 04 (1)	H	F04F1		1-02 *	P		D01					232
RKBA 04 (1)	H			1							1-0/8 1400000000	232
RKBA 05 (1)	H	F03H1		1-01 *	P		D01		1		1	233
RKBA 05 (1)	H	F04H1		1-02 *	P		D01					233
RKBA 05 (1)	H			1							1-0/8 1400000000	233
RKBA 06 (1)	H	F03J1		1-01 *	P		D01		1		1	234
RKBA 06 (1)	H	F04J1		1-02 *	P		D01					234
RKBA 06 (1)	H			1							1-0/8 1400000000	234
RKBA 07 (1)	H	F03K1		1-01 *	P		D01		1		1	235
RKBA 07 (1)	H	F04K1		1-02 *	P		D01					235
RKBA 07 (1)	H			1							1-0/8 1400000000	235
RKBA 08 (1)	H	F03L1		1-01 *	P		D01		1		1	236
RKBA 08 (1)	H	F04L1		1-02 *	P		D01					236
RKBA 08 (1)	H			1							1-0/8 1400000000	236
RKBA 09 (1)	H	F03M1		1-01 *	P		D01		1		1	237
RKBA 09 (1)	H	F04M1		1-02 *	P		D01					237
RKBA 09 (1)	H			1							1-0/8 1400000000	237
RKBA 10 (1)	H	F03N1		1-01 *	P		D01		1		1	238
RKBA 10 (1)	H	F04N1		1-02 *	P		D01					238
RKBA 10 (1)	H			1							1-0/8 1400000000	238

RUN NAME	A/P	PIN NAME	ORDER PIN	BAY = ORDER	Q	DRAW OPT	RV RG Y	X	Z	REMARKS	NC FLAG	LENGTH	EXCEPTIONS	RUN NUMBER
RKBA 11 (1)	H	EW3K1		1=01 *	P		D01		1			1		239
RKBA 11 (1)	H	EW4P1		1=02 *	P		D01							239
RKBA 11 (1)	H			1								1=0/8	1400000000	239
RKBA 12 (1)	H	EW3P1		1=01 *	P		D01		1			1		240
RKBA 12 (1)	H	EW4P1		1=02 *	P		D01							240
RKBA 12 (1)	H			1								1=0/8	1400000000	240
RKBA 13 (1)	H	EW3S1		1=01 *	P		D01		1			1		241
RKBA 13 (1)	H	EW4S1		1=02 *	P		D01							241
RKBA 13 (1)	H			1								1=0/8	1400000000	241
RKBA 14 (1)	H	EW3U1		1=01 *	P		D01		1			1		242
RKBA 14 (1)	H	EW4U1		1=02 *	P		D01							242
RKBA 14 (1)	H			1								1=0/8	1400000000	242
RKBA 15 (1)	H	EW3V1		1=01 *	P		D01		1			1		243
RKBA 15 (1)	H	EW4V1		1=02 *	P		D01							243
RKBA 15 (1)	H			1								1=0/8	1400000000	243
RKBA OVF	L	EW1S1		1=01 *	P		D01		1			1=6/8		244
RKBA OVF	L	EW3S2		1=02 *	P		D01							244
RKBA OVF	L			1								1=6/8	1400000000	244
RKDA 00 (1)	H	EW3P2		1=01 *			D02		1			6=7/8		245
RKDA 00 (1)	H	EW3A1		1=02 *	P		D01		2			1		245
RKDA 00 (1)	H	EW2A1		1=03 *	P		D01							245
RKDA 00 (1)	H			1								7=7/8	1400000000	245
RKDA 01 (1)	H	EW3V1		1=01 *			D02		1			6=2/8		246
RKDA 01 (1)	H	EW3B1		1=02 *	P		D01		2			1		246
RKDA 01 (1)	H	EW2B1		1=03 *	P		D01							246
RKDA 01 (1)	H			1								7=2/8	1400000000	246
RKDA 02 (1)	H	EW3N1		1=01 *			D02		1			7=1/8		247
RKDA 02 (1)	H	EW3C1		1=02 *	P		D01		2			1		247
RKDA 02 (1)	H	EW2C1		1=03 *	P		D01		1			1		247
RKDA 02 (1)	H	EW1C1		1=04 *	P		D01							247
RKDA 02 (1)	H			1								9=1/8	1400000000	247
RKDA 03 (1)	H	EW3K2		1=01 *			D02		1			7=5/8		248
RKDA 03 (1)	H	EW3D1		1=02 *	P		D01		2			1		248
RKDA 03 (1)	H	EW2D1		1=03 *	P		D01		1			1		248
RKDA 03 (1)	H	EW1D1		1=04 *	P		D01							248
RKDA 03 (1)	H			1								9=5/8	1400000000	248
RKDA 04 (1)	H	EW3U2		1=01 *			D02		1			6=7/8		249
RKDA 04 (1)	H	EW3E1		1=02 *	P		D01		2			1		249
RKDA 04 (1)	H	EW2E1		1=03 *	P		D01							249
RKDA 04 (1)	H			1								7=7/8	1400000000	249
RKDA 05 (1)	H	EW3T2		1=01 *			D02		1			7=1/8		250
RKDA 05 (1)	H	EW3F1		1=02 *	P		D01		2			1		250
RKDA 05 (1)	H	EW2F1		1=03 *	P		D01							250
RKDA 05 (1)	H			1								8=1/8	1400000000	250

RUN NAME	A/P	PIN NAME	ORDER PIN	BAY = ORDER	Q	DRAW OPT	RV RG Y	X	Z	REMARKS	NC FLAG	LENGTH	EXCEPTIONS	RUN NUMBER
RKDA 06 (1)	H	EW3C1		1=01 *			D02		1			8=6/8		251
RKDA 06 (1)	H	EW3H1		1=02 *	P		D02		2			1		251
RKDA 06 (1)	H	EW2H1		1=03 *	P		D01							251
RKDA 06 (1)	H			1								9=6/8	1400000000	251
RKDA 07 (1)	H	EW3J1		1=01 *			D01		1			8=2/8		252
RKDA 07 (1)	H	EW3J1		1=02 *	P		D01		2			1		252
RKDA 07 (1)	H	EW2J1		1=03 *	P		D01							252
RKDA 07 (1)	H			1								9=2/8	1400000000	252
RKDA 08 (1)	H	EW3F1		1=01 *			D02		1			8=5/8		253
RKDA 08 (1)	H	EW3K1		1=02 *	P		D01		2			1		253
RKDA 08 (1)	H	EW2K1		1=03 *	P		D01							253
RKDA 08 (1)	H			1								9=5/8	1400000000	253
RKDA 09 (1)	H	EW3L1		1=01 *			D02		1			8=2/8		254
RKDA 09 (1)	H	EW3G1		1=02 *	P		D01		2			1		254
RKDA 09 (1)	H	EW2L1		1=03 *	P		D01							254
RKDA 09 (1)	H			1								9=2/8	1400000000	254
RKDA 10 (1)	H	EW3F1		1=01 *			D02		1			8		255
RKDA 10 (1)	H	EW3M1		1=02 *	P		D01		2			1		255
RKDA 10 (1)	H	EW2M1		1=03 *	P		D01							255
RKDA 10 (1)	H			1								9=0/8	1400000000	255
RKDA 11 (1)	H	EW3S2		1=01 *			D02		1			7=7/8		256
RKDA 11 (1)	H	EW3N1		1=02 *	P		D01		2			1		256
RKDA 11 (1)	H	EW2N1		1=03 *	P		D01							256
RKDA 11 (1)	H			1								8=7/8	1400000000	256
RKDA 12 (1)	H	EW3K1		1=01 *			D02		1			8=6/8		257
RKDA 12 (1)	H	EW3P1		1=02 *	P		D01		2			1		257
RKDA 12 (1)	H	EW2P1		1=03 *	P		D01							257
RKDA 12 (1)	H			1								9=6/8	1400000000	257
RKDA 13 (1)	H	EW2R1		1=01 *	P		D01		1			1		258
RKDA 13 (1)	H	EW3R1		1=02 *	P		D01							258
RKDA 13 (1)	H			1								1=0/8	1400000000	258
RKDA 14 (1)	H	EW2S1		1=01 *	P		D01		1			1		259
RKDA 14 (1)	H	EW3S1		1=02 *	P		D01							259
RKDA 14 (1)	H			1								1=0/8	1400000000	259
RKDA 15 (1)	H	EW2U1		1=01 *	P		D01		1			1		260
RKDA 15 (1)	H	EW3U1		1=02 *	P		D01							260
RKDA 15 (1)	H			1								1=0/8	1400000000	260
RKDB 00 (1)	H	CW2T2		1=01 *	P		D01		1			1		261
RKDB 00 (1)	H	CW3T2		1=02 *	P		D01							261
RKDB 00 (1)	H			1								1=0/8	1400000000	261
RKDS 00 (1)	H	EW1V1		1=01 *	P		D01		1			1		262
RKDS 00 (1)	H	EW2V1		1=02 *	P		D01							262
RKDS 00 (1)	H			1								1=0/8	1400000000	262

RUN NAME	A/P	PIN NAME	ORDER PIN	BAY = ORDER	Q	DRAW OPT	RV RG Y	X	Z	REMARKS	NC LENGTH EXCEPTIONS FLAG	RUN NUMBER
RKDS Ø1 (1)	H	EØ1D2		1=Ø1 *	P		DØ1		1		1	263
RKDS Ø1 (1)	H	EØ2D2		1=Ø2 *	P		DØ1					263
RKDS Ø1 (1)	H			1							1=Ø/8 1400000000	263
RKDS Ø2 (1)	H	EØ1E2		1=Ø1 *	P		DØ1		1		1	264
RKDS Ø2 (1)	H	EØ2E2		1=Ø2 *	P		DØ1					264
RKDS Ø2 (1)	H			1							1=Ø/8 1400000000	264
RKDS Ø3 (1)	H	EØ1F2		1=Ø1 *	P		DØ1		1		1	265
RKDS Ø3 (1)	H	EØ2F2		1=Ø2 *	P		DØ1					265
RKDS Ø3 (1)	H			1							1=Ø/8 1400000000	265
SC=SA	H	EØ1H2		1=Ø1 *	P		DØ1		1		1	266
SC=SA	H	EØ2H2		1=Ø2 *	P		DØ1					266
SC=SA	H			1							1=Ø/8 1400000000	266
SCH CMP (1)	H	EØ1S1		1=Ø1 *	P		DØ1		1		1	267
SCH CMP (1)	H	EØ2S1		1=Ø2 *	P		DØ1					267
SCH CMP (1)	H			1							1=Ø/8 1400000000	267
SECTOR END	L	CØ2S2		1=Ø1 *	P		DØ1		1		1	268
SECTOR END	L	CØ3S2		1=Ø2 *	P		DØ1					268
SECTOR END	L			1							1=Ø/8 1400000000	268
SECTOR PULSE	H	EØ1M2		1=Ø1 *	P		DØ1		1		1	269
SECTOR PULSE	H	EØ2M2		1=Ø2 *	P		DØ1					269
SECTOR PULSE	H			1							1=Ø/8 1400000000	269
SEEK OR RESET	H	BØ3N2		1=Ø1 *			DØ2		1		11=1/8	270
SEEK OR RESET	H	FØ2L2		1=Ø2 *	P		DØ1		2		1	270
SEEK OR RESET	H	FØ1L2		1=Ø3 *	P		DØ1					270
SEEK OR RESET	H			1							12=1/8 1400000000	270
SER RD DATA (1)	H	CØ1V1		1=Ø1 *	P		DØ1		2		1	271
SER RD DATA (1)	H	CØ2V1		1=Ø2 *	P		DØ1		1		1	271
SER RD DATA (1)	H	CØ3V1		1=Ø3 *	P		DØ1					271
SER RD DATA (1)	H			1							2=Ø/8 1400000000	271
SIN	H	EØ1N2		1=Ø1 *	P		DØ1		1		1	272
SIN	H	EØ2N2		1=Ø2 *	P		DØ1					272
SIN	H			1							1=Ø/8 1400000000	272
STOP WPRS	L	CØ1H1		1=Ø1 *	P		DØ1		1		1=4/8	273
STOP WPRS	L	CØ3H1		1=Ø2 *	P		DØ1					273
STOP WPRS	L			1							1=4/8 1400000000	273
STOP POLL	L	FØ1N2		1=Ø1 *	P		DØ1		1		1	274
STOP POLL	L	FØ2N2		1=Ø2 *	P		DØ1					274
STOP POLL	L			1							1=Ø/8 1400000000	274
WC OVF (1)	H	BØ3S1		1=Ø1 *			DØ2		1		2=1/8	275
WC OVF (1)	H	CØ3J1		1=Ø2 *	P		DØ1		2		1=4/8	275
WC OVF (1)	H	CØ1J1		1=Ø3 *	P		DØ1					275
WC OVF (1)	H			1							3=5/8 1400000000	275

RUN NAME	A/P	PIN NAME	ORDER PIN	BAY = ORDER	Q	DRAW OPT	RV RG Y	X	Z	REMARKS	NC LENGTH EXCEPTIONS FLAG	RUN NUMBER
WRITE	H	FØ1H2		1=Ø1 *	P		DØ1		1		1	276
WRITE	H	FØ2H2		1=Ø2 *	P		DØ1					276
WRITE	H			1							1=Ø/8 1400000000	276
WT GATE (1)	H	BØ3M2		1=Ø1 *			DØ2		1		11=7/8	277
WT GATE (1)	H	FØ2P1		1=Ø2 *	P		DØ1		2		1	277
WT GATE (1)	H	FØ1P1		1=Ø3 *	P		DØ1					277
WT GATE (1)	H			1							12=7/8 1400000000	277
WT LOCK	H	FØ1S2		1=Ø1 *	P		DØ1		1		1	278
WT LOCK	H	FØ2S2		1=Ø2 *	P		DØ1					278
WT LOCK	H			1							1=Ø/8 1400000000	278
WT PRCT STATUS	H	FØ1J2		1=Ø1 *	P		DØ1		1		1	279
WT PRCT STATUS	H	FØ2J2		1=Ø2 *	P		DØ1					279
WT PRCT STATUS	H			1							1=Ø/8 1400000000	279
WT+WT CHK	H	BØ3H2		1=Ø1 *			DØ2		1		3=7/8	280
WT+WT CHK	H	CØ3P1		1=Ø2 *	P		DØ1		2		1	280
WT+WT CHK	H	CØ2P1		1=Ø3 *	P		DØ1		1		1	280
WT+WT CHK	H	CØ1P1		1=Ø4 *	P		DØ1					280
WT+WT CHK	H			1							5=7/8 1400000000	280
XFER FUNCTION	H	FØ1V2		1=Ø1 *	P		DØ1		1		1	281
XFER FUNCTION	H	FØ2V2		1=Ø2 *	P		DØ1					281
XFER FUNCTION	H			1							1=Ø/8 1400000000	281

AUTOMATIC WIRE TESTER (AWT) REVISION STATUS

DRAWING NUMBER	INIT REL																				
	TIO	F	H																		
K-WL-RK11-D-2	F	F	H																		
C-IA-7009142-0-0	B	B	C																		
D-CS-5410185-0-1	A	B	B																		

REV H

SIZE A CODE WT NUMBER 7009142-0

REVISIONS			
CHK	CHANGE NO.	REV.	
—	5410185-1	—	ORIGINATED
		H	RK11D-00019

DRN.	DATE 7-25-74	digital EQUIPMENT CORPORATION MAYNARD, MASSACHUSETTS
CHK'D.	DATE	
ENG.	DATE 7-25-74	TITLE RK11-D
PROJ. ENG.	DATE 7-25-74	
PROD.	DATE 7-25-74	AWT REVISION STATUS
FIRST USED ON RK11-D		SIZE A CODE WT NUMBER 7009142-0 REV. H
SCALE —		
SHEET 1 OF 1		DIST.

DRA 123

DEC 16-(325)-1097-N174