digital

209

RK05J

Engineering Drawings

Digital Equipment Corporation

The material herein is for information purposes only and is subject to change without notice. Digital Equipment Corporation assumes no responsibility for any errors which may appear herein.

These drawings and specifications herein are the property of Digital Equipment Corporation and shall not be reproduced or copied or used in whole or in part as the basis for the manufacture or sale of items without written permission.
Copyright © 1975, Digital Equipment Corporation

digital EQUIPMENT CORPORATION
MAYNARD MASSACHUSETTS

DRAWING DIRECTORY

"THIS DRAWING AND SPECIFICATIONS, HEREIN, ARE THE PROPERTY OF DIGITAL EQUIPMENT CORPORATION AND SHALL NOT BE REPRODUCED OR COPIED OR USED IN WHOLE OR IN PART AS THE BASIS FOR THE MANUFACTURE OR SALE OF ITEMS WITHOUT WRITTEN PERMISSION. COPYRIGHT © , DIGITAL EQUIPMENT CORPORATION"

CUSTOMER PRINT SET INDEX

THIS IS PRINT SET [X]

	SEQUENCE
DRAWING DIRECTORY	B-DD-RKØ5J-Ø SHEET #1 ONLY
MODULE UTILIZATION LIST	C-MU-RKØ5-Ø-2
READ/WRITE	D-CS-G18Ø-Ø-1
INDEX & SECTOR	D-CS-M7680-Ø-1
CYLINDER ADDRESS & DIFFERENCE	D-CS-M7681-Ø-1
CONTROL & INTERLOCK	D-CS-M77Ø1-Ø-1
POSITION SERVO PREAMP	D-CS-G938-Ø-1
SERVO POWER AMP CIRCUIT	D-CS-H6Ø4-Ø-1
SERVO POWER AMP	E-UA-H6Ø4-Ø-Ø
CONTROL PANEL CIRCUIT	D-CS-5409698-0-1
CONTROL PANEL	E-IA-5409698-0-0
RELAY BOARD CIRCUIT	D-CS-5409574-0-1
DECPACK MOTOR RELAYS	E-IA-5409574-0-0
CHASSIS WIRING	D-BD-RKØ5-Ø-1
ACCESSORY LIST	A-AL-RKØ5-Ø-17
POWER SUPPLY (H743)	B-DD-H743-Ø
WIRE LIST	K-WL-RKØ5-Ø-3

MFG. PRINT SET	SEQUENCE
MODULE UTILIZATION (PL)	A-PL-RKØ5-Ø-2
RKØ5J TESTER	B-DD-RKØ5J-T
DECPACK ASSY	D-UA-RKØ5J-0-0
DECPACK ASSY (PL)	A-PL-RKØ5J-0-0
WIRED ASSY	D-AD-7008696-0-0
LINEAR POSITIONER ASSY	D-AD-7008702-0-0
LINEAR POSITIONER ASSY (PL)	A-PL-7008702-0-0
H743 POWER SUPPLY	B-DD-H743-Ø
REVISION STATUS	A-WT-7008696-0
SPACER	B-MD-7419064-0-0

UNIT VARIATIONS

VAR	TITLE	PRINT SET RKØ5J-Ø
RKØ5J-AA	DECPACK 115V 60HZ	X
RKØ5J-AB	DECPACK 230V 60HZ	X
RKØ5J-BA	DECPACK 115V 50HZ	X
RKØ5J-BB	DECPACK 230V 50HZ	X
RKØ5J-CA	RKØ5J-AA W.BEZEL FOR H9500	
	CAB 115V 60HZ	X
RKØ5J-CB	RKØ5J-AB W.BEZEL FOR H9500	
	CAB 230V 60HZ	X
RKØ5J-CC	RKØ5J-BA W.BEZEL FOR H9500	
	CAB 115V 50HZ	X
RKØ5J-CD	RKØ5J-BB W.BEZEL FOR H9500	
	CAB 230V 50HZ	X
RKØ5J-DE	RKØ5J-AA H960 861 PWR CONTROL	
RKØ5J-DF	RKØ5J-AB H960 861	
RKØ5J-DH	RKØ5J-BA H960 861	
RKØ5J-DJ	RKØ5J-BB H960 861	

REVISIONS

DATE	CHG. NO.	REV
A.V.	RKØ5-69	AL
DWG WAS RKØ5-0		
A.V.	RKØ5J-3	AM
	RKØ5J-4	AN
	RKØ5J-5	AP
	RKØ5J-6	AR
	RKØ5J-7	AS
	RKØ5J-8	AT
7-77	RKØ5J-9	AU
8-77	RKØ5J-10	AV

USED ON OPTION/MODEL
RKØ5J
SHEET 1 OF 5

DRN. J. FLEMING	DATE 1/72	TITLE DECPACK ASSY
CHK'D. J. FLEMING	DATE 5/72	
PROJ ENG. A. KARLSBERG	DATE 5/72	
PROD. A. KARLSBERG	DATE 5/72	SIZE B · CODE DD · NUMBER RKØ5J Ø · REV AV
FIELD SERV. J. WALSH	DATE 5/72	DIST

DRB 106

This drawing and specifications, herein, are the property of Digital Equipment Corporation and shall not be reproduced or copied or used in whole or in part as the basis for the manufacture or sale of items without written permission.

NOTE:
TERMINATOR OR DISKBUS CABLE CONNECTOR MAY BE INTERCHANGED BETWEEN SLOTS 7 AND 8.

	1	2	3	4	5	6	7	8
	G180	M7680	M7681	M7701	G938	M983	M930 *	M929
USAGE								
USAGE	READ/ WRITE	INDEX & SECTOR	CYLINDER ADDRESS & DIFFERENCE	CONTROL & INTERLOCK	POSITION SERVO PREAMP	CHASSIS CONNECTOR	TERMINATOR	DISKBUS CABLE CONNECTOR

* IF MORE THAN ONE DRIVE IS USED, M930 IS REPLACED BY M929 (BC11A), M930 IS USED IN THE LAST DRIVE ON THE BUS.

REVISIONS			
CHK	CHANGE NO.		REV.
	RK05-00002	D. JENSEN	A
	RK05-00066	JENSEN	B
	RK05-00023	G. SCHNEIDER	C
	RK05-00040	G. SCHNEIDER	D
	RK05J-00007	S. RADOFF	E

FIRST USED ON OPTION/MODEL	QTY.	DESCRIPTION	PART NO.	ITEM NO.
RKØ5		PARTS LIST		

UNLESS OTHERWISE SPECIFIED DIMENSION IN INCHES TOLERANCES
DECIMALS .XXX = .005 .XX = .02 .X = .1
ANGLES ±0° 30'
REMOVE BURRS AND BREAK SHARP CORNERS SURFACE QUALITY ✓
MATERIAL —
FINISH —

DRN.	D. Schmidt	DATE 11-2-71
CHK'D.	J. T. Conroy	DATE 11-9-71
ENG.	Linda Robinson	DATE 24 Nov 71
PROJ. ENG.	C. C. Simmons	DATE 11-24-71
PROD.	D. Zaibeck	DATE 11-17-71

NEXT HIGHER ASSY. B-DD-RKØ5-Ø
SCALE NONE
SHEET OF

digital EQUIPMENT CORPORATION
MAYNARD MASSACHUSETTS

TITLE MODULE UTILIZATION

SIZE	CODE	NUMBER	REV.
C	MU	RKØ5-Ø-2	E

DIST.

DEC FORM NO. DRC 100-A

"THIS DRAWING AND SPECIFICATIONS, HEREIN, ARE THE PROPERTY OF DIGITAL EQUIPMENT CORPORATION AND SHALL NOT BE REPRODUCED OR COPIED OR USED IN WHOLE OR IN PART AS THE BASIS FOR THE MANUFACTURE OR SALE OF ITEMS WITHOUT WRITTEN PERMISSION. COPYRIGHT © 1974 DIGITAL EQUIPMENT CORPORATION"

NOTES:

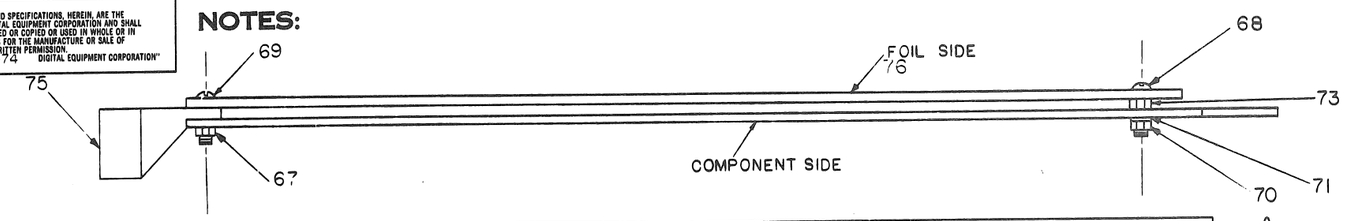

NOTE:
DO NOT INSERT → HANDLE HOLE EYELETS ON OUTSIDE HANDLE HOLES: (2 PLCS)

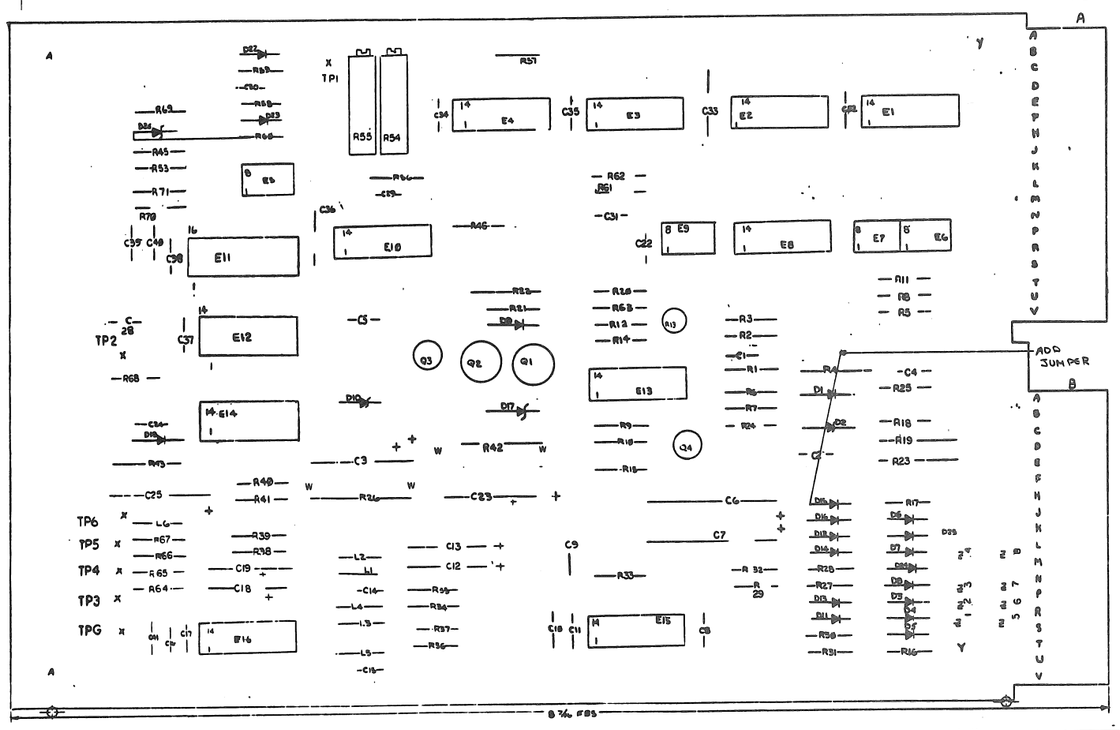

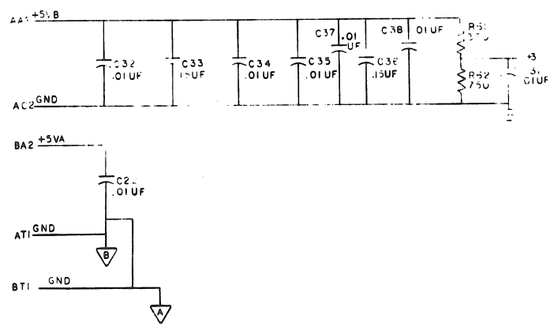

DEC 8640	1	8	
DEC 7400,52	4	8	
IC TYPE	GND	+5V	

GND AND 5V ARE USUALLY PIN 7 AND 14 RESPECTIVELY EXCEPTIONS ARE STATED ABOVE

IC PIN LOCATIONS

QTY	REF. DESIGNATION	DESCRIPTION	PART NO.	ITEM NO.
A/R		WIRE, #30 AWG GREEN	9105740-55	80
1	D26	DIODE IN748A (3.9V ZENER)	1100122	79
1	R69	RES. 180 1/4W 5%	1301322	78
2	R7,R10	RES. 100 1/4W 5%	1300229	77
1		NOISE SHIELD	5009893	76
2		HANDLE, FLIP CHIP-GREEN	9008337-01	75
7	TPG, TP1 THRU TP6	SWAGE LUG	9007791	74
2		HEX NUT, NYLON, #2-56	9007263	73
2		EYELET #GS4-7	9006732	72
2		INTERNAL LOCK WASHER #2-56	9006631	71
2		HEX NUT #2-56	9006555	70
2		SCREW 4/40X3/8	9006011-4	69
2		SCREW PAN HD #2-56X5/16	9006002-1	68
2		KEP NUT 4/40	9006557	67
3	E6,E7,E9	I.C. DEC 75452	1910645	66
2	E15,16	I.C. DEC 733	1910644	65
1	E14	I.C. DEC 1414	1910337	64
1	E5	I.C. DEC 741	1910298	63
1	E1	I.C. DEC 8881	1909705	62
2	E2,E8	I.C. DEC 8640	1911469	61
1	E10	I.C. DEC 9601	1909373	60
1	E13	I.C. DEC 7472	1905588	59
2	E4,E12	I.C. DEC 7400	1905575	58
1	E3	I.C DEC 7474	1905547	57
1	L6	INDUCTOR 120UH	1610663	56
2	L1,L2	INDUCTOR 56UH	1610661	55
3	L3,L4,L5	INDUCTOR 100UH	1610662	54
1	Q3	TRANSISTOR DEC 6534C	1503409-02	53
1	Q4	TRANSISTOR DEC 3009B	1503100	52
2	Q1,Q2	TRANSISTOR 2N2904	1501742	51
				50
1	R13	POT 1K 1/2W 20% 62PR	1309150-03	49
2	R54,55	POT 10K 3/4W 10% 76PR	1309143-10	48
2	R16,R17	RES. 27K 1/4W 5%	1305346	47
2	R27,R28	RES. 6.2K 1/4W 5%	1303179	46
1	R60	RES. 220K 1/4W 5%	1302092	45
1	R4	RES. 270 1/2W 5%	1300285	44
2	R40,R41	RES. 560 1/4W 5%	1301490	43
6	R6,9,45,53,70,71	RES. 5.6K 1/4W 5%	1301974	42
1	R11	RES. 1.1K 1/4W 5%	1301475	41
1	R56	RES. 3.3K 1/4W 5%	1300439	40
1	R62	RES. 750 1/4W 5%	1301401	39
2	R15,R21	RES. 1.2K 1/4W 5%	1301320	38
2	R30,R31	RES. 15K 1/4W 5%	1300496	37
6	R5,8,18,38,39,57	RES. 10K 1/4W 5%	1300479	36
1	R59	RES. 4.7K 1/4W 5%	1300447	35
1	E11	I.C. DEC. 74123	1910436	34
16	R1,R2,R3 R20,R34-37	RES. 1K 1/4W 5%	1300365	33
	R46,R56,R63-68			
2	R24,R12	RES. 470 1/4W 5%	1300316	31
1	R43	RES. 470 1/2W 5%	1300315	30
3	R22,R25,R61	RES. 330 1/4W 5%	1300295	29
2	R29,R32	RES. 220 1/4 5%	1300271	28
2	R26,R42	RES. 180 1W 5%	1300262	27
1	R19	RES. 180 1/2W 5%	1300260	26
1	R14	RES. 150 1/4W 5%	1300250	25
1	R23	RES. 150 1/2W 5%	1300249	24
1	R33	RES. 68 1/4W 5%	1300219	23
8	1-8	GOLD WIREWRAP PINS	9009217	22
18	D1,D3-9,D11-16,D22-25	DIODE D672	1105275	21
1	D2	DIODE IN 751A (5.1V ZENER)	1110994	20
				19
3	D10,D17,D18	DIODE IN 753A (6.2V ZENER)	1102421	18
13	C9,C33,C36	CAP 15UF 50V 10% TANT	1010031	17
1	C15	~~CAP. 15PF 100V 5% D.M.~~	~~1002608~~	~~16~~
4	C12,C13,C18,C19	CAP. .01 UF 50V AXIAL	1001610-00	15
14	C4,10,11,16,17,22,24,28,31	CAP. .01UF 100V 20% DISC	1001610-01	14
	32,34,35,37,38			
2	C6,C7	CAP 10UF 35V 20% S.TANT	1000069	13
3	C3,C23,C25	CAP 6.8UF 35V 20% S.TANT	1000067	12
1	C2	CAP 680PF 100V 5% D.M.	1000026	11
2	C5,C30	CAP 470PF 100V 5% D.M.	1000024	10
1	C29	CAP 150PF 100V 5% D.M.	1000019	9
1	C41	CAP 27PF 100V 5% D.M.	1001739	8
1	C14	CAP 56PF 100V 5% D.M.	1000012	7
3	C1,C39,C40	CAP 47PF 100V 5% D.M.	1000011	6
2	C8,C15	CAP 18 PF 100V 5% D.M.	1002608	5
		ETCHED CIRCUIT BOARD	5009743	4
		MODULE ECO HISTORY	B-MH-G180-0-3	3
		ASSY/DRILLING HOLE LAYOUT	E-AH-G180-0-5	2
		X-Y COORDINATE HOLE LOCATION	K-CO-G180-0-4	1

ETCH BOARD REV. L

PARTS LIST

DEC NO.	EIA NO.	DEC NO.	EIA NO.
2N2904	2N2118A	IN746A	SAME
DEC 3009B	2N3009	IN753A	SAME
DEC 6534C	MPS6534	IN751A	SAME
		D672	IN3653

SEMICONDUCTOR CONVERSION CHART

REV.	CHANGE NO.	CHK
L	00008	
K	00006	
J	00009	
H	00010	
G	00011	
F		
E		
D		
C		
B		
A		

REVISIONS

S. RADOFF 9-12-71
J. RINALDIS 11-2-75
N. FIELD 1/27/75
K. FREY 7/1/72
DALE JENSEN 10-29-75

DRN. R. DOUCETTE	DATE 10-22-71		
CHK'D. NANCY MOORE	DATE 11-30-71		
ENG. DALE JENSEN	DATE 1-22-72		
PROJ. ENG. B. KARLSBERG	DATE 1-22-72		
PROD.	DATE		
NEXT HIGHER ASSY			
SCALE			
SHEET 1 OF 2			

digital

TITLE DEC PACK READ/WRITE

SIZE	CODE	NUMBER	REV.
D	CS	G180-0-1	

DIST.

DEC FORM NO. DRD 118.0

THIS SCHEMATIC IS FURNISHED ONLY FOR TEST AND MAINTENANCE PURPOSES. THE CIRCUITS ARE PROPRIETARY IN NATURE AND SHOULD BE TREATED ACCORDINGLY
COPYRIGHT 1971 BY DIGITAL EQUIPMENT CORPORATION

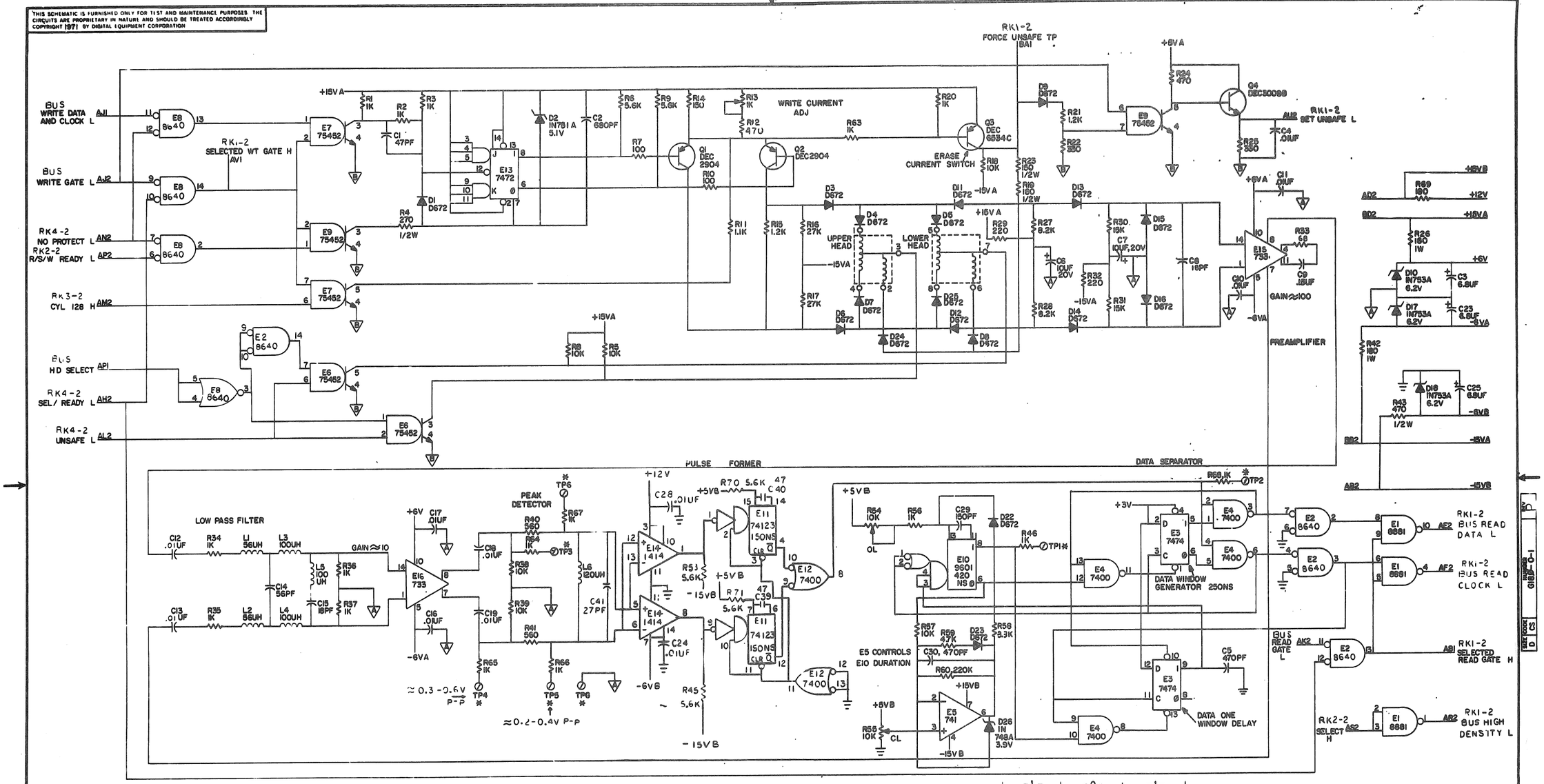

UNLESS OTHERWISE INDICATED:
- * INDICATES SWAGE LUG
- ▽ = ANALOG GND "A" BT1
- ▽ = ANALOG GND "B" BT1
- ⏚ = DIGITAL GND AC2
- ----- = COMPONENTS NOT MOUNTED ON BOARD

ALL TIMES INDICATED ARE NOMINAL

SLOT-1

TRANSISTOR & DIODE CONVERSION CHART			
DEC	EIA	DEC	EIA
DEC234C	MPS6514	D672	1N914
DEC2003	2N2013	D673	1N34A
2N2904	2N1708	D753A	1N753A

EQUIPMENT CORPORATION, MAYNARD, MASSACHUSETTS

TITLE: DEC PACK READ/WRITE RK1-2

SIZE D | CODE CS | NUMBER G185-0-1 | REV P

PRINTED CIRCUIT REV.

SHEET 2 OF 2

DEC FORM NO. DRD 118

"THIS DRAWING AND SPECIFICATIONS, HEREIN, ARE THE PROPERTY OF DIGITAL EQUIPMENT CORPORATION AND SHALL NOT BE REPRODUCED OR COPIED OR USED IN WHOLE OR IN PART AS THE BASIS FOR THE MANUFACTURE OR SALE OF ITEMS WITHOUT WRITTEN PERMISSION. COPYRIGHT © 1976, DIGITAL EQUIPMENT CORPORATION"

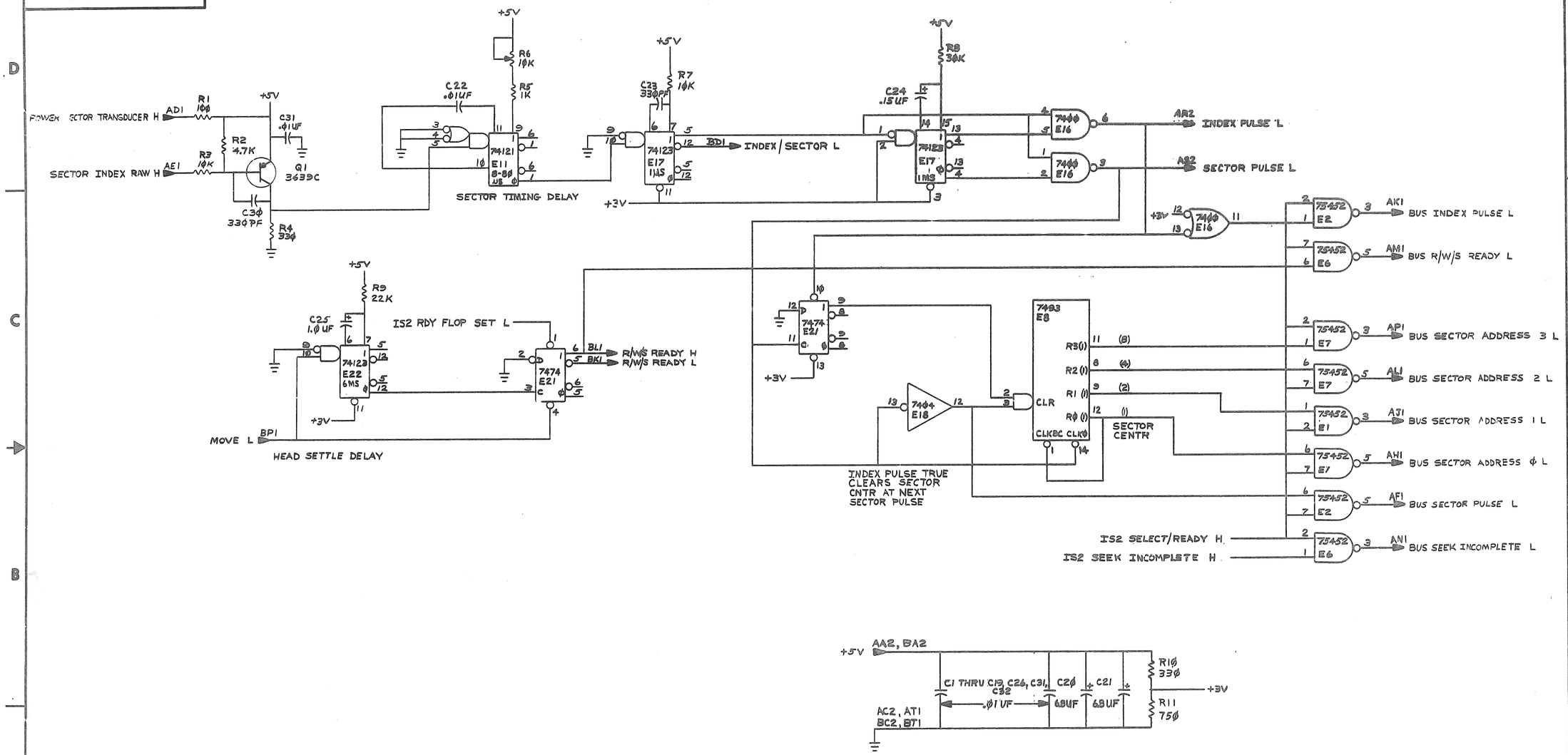

REVISIONS		
CHK	CHANGE NO.	REV.
[illegible]	M7680-00011	B
	[illegible]	
	S. RADOFF	
	[illegible] 5-31-77	

DEC FORM NO. 600 105-0

DRN. [illegible]	22 JAN 76	FIRST USED ON
CHK'D [illegible]	9 FEB 76	digital
ENG. [illegible]	[illegible]	TITLE (IS1)
PROJ. ENG. [illegible]	[illegible]	DEC PACK INDEX AND SECTOR
PROD. [illegible]	[illegible]	
NEXT HIGHER ASSY.		
D-UA-M7680-Ø-Ø		SIZE D · CODE CS · NUMBER M7680-Ø-1 · REV. B
SCALE —		
SHEET 1 OF 2		DIST.

D CS M7680-Ø-1 B

"THIS DRAWING AND SPECIFICATIONS, HEREIN, ARE THE PROPERTY OF DIGITAL EQUIPMENT CORPORATION AND SHALL NOT BE REPRODUCED OR COPIED OR USED IN WHOLE OR IN PART AS THE BASIS FOR THE MANUFACTURE OR SALE OF ITEMS WITHOUT WRITTEN PERMISSION. COPYRIGHT © 1976 DIGITAL EQUIPMENT CORPORATION"

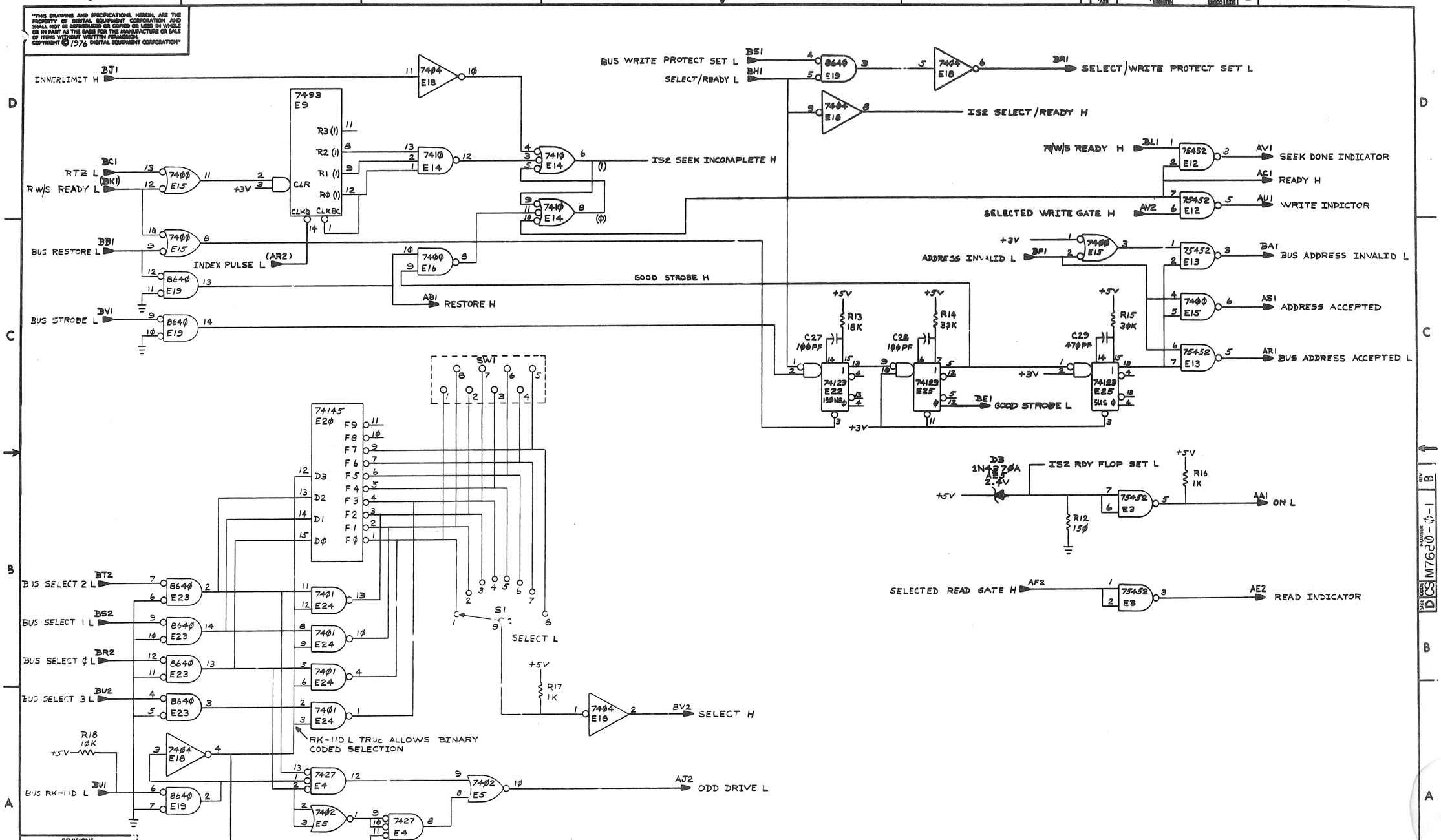

REVISIONS		
CHK	CHANGE NO.	REV.

TITLE	SIZE	CODE	NUMBER	REV.
DEC PACK INDEX (IS2) AND SECTOR	D	CS	M7680-0-1	B
SCALE — / /	SHEET 2 OF 2	DIST.		

DEC FORM NO. DRD 135

"THIS DRAWING AND SPECIFICATIONS, HEREIN, ARE THE PROPERTY OF DIGITAL EQUIPMENT CORPORATION AND SHALL NOT BE REPRODUCED OR COPIED OR USED IN WHOLE OR IN PART AS THE BASIS FOR THE MANUFACTURE OR SALE OF ITEMS WITHOUT WRITTEN PERMISSION. COPYRIGHT © 1976, DIGITAL EQUIPMENT CORPORATION"

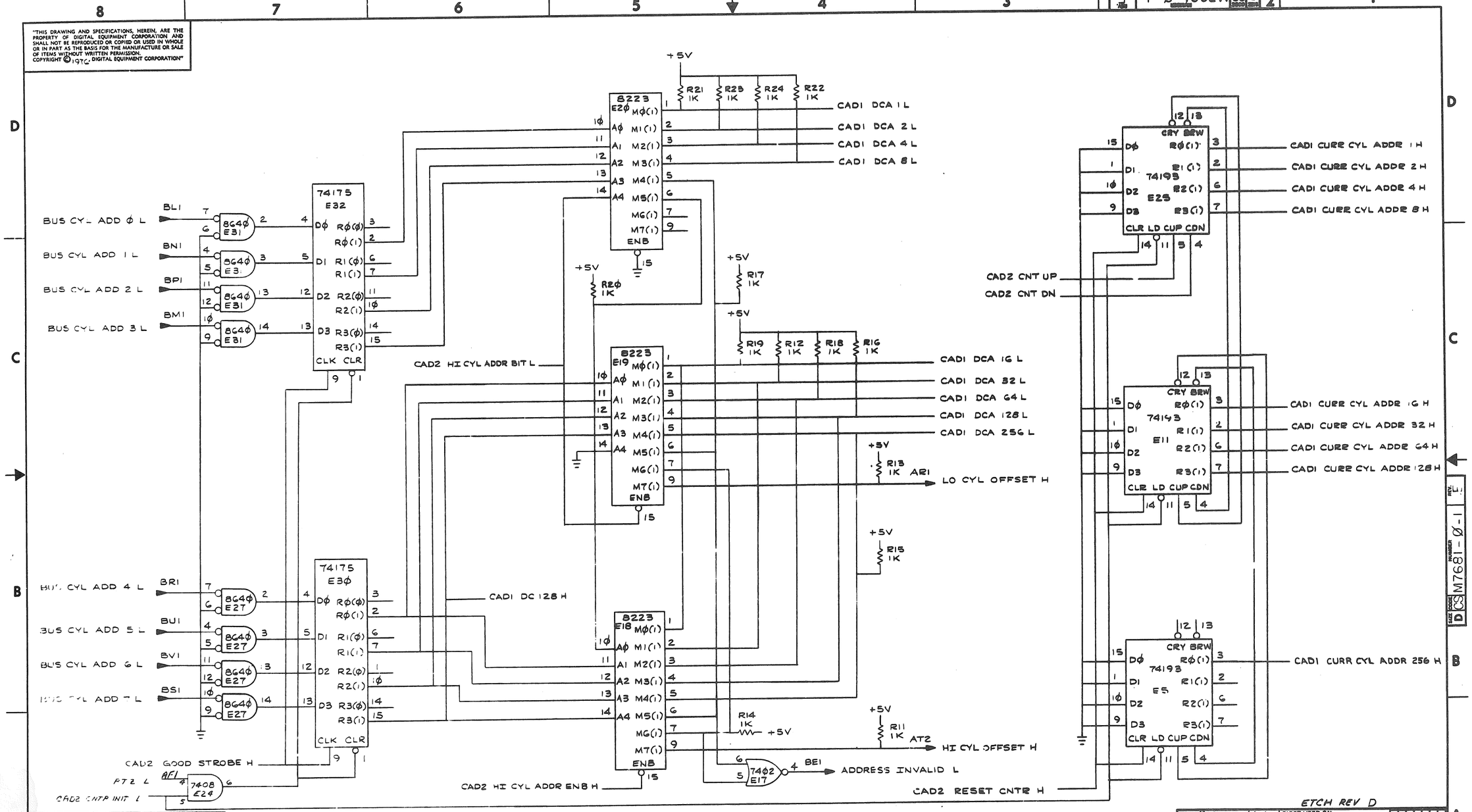

ETCH REV D

DRN.		1/21/76	FIRST USED ON RKØ5F
CHK'D		2 FEB 76	digital
ENG.		2 FEB 76	TITLE CYLINDER ADDRESS AND DIFFERENCE (CADI)
PROJ. ENG.			
PROD.		25 FEB 76	
NEXT HIGHER ASSY.	RKØ5F		
D-UA-M7681-Ø-Ø			SIZE D CODE CS NUMBER M7681-Ø-1 REV. F
SCALE			
SHEET 1 OF 3			DIST.

REVISIONS			
CHK	CHANGE NO.		REV.
	M7681-00002	J. RINALDIS 6/15/76	F
	M7681-00003	J. RINALDIS 6/15/76	C
	M7681-00004	S. RALOFF 6/17/76	D
	M7681-00005	A. RICARD	E

DEC FORM NO. ORD 102-D

"THIS DRAWING AND SPECIFICATIONS, HEREIN, ARE THE PROPERTY OF DIGITAL EQUIPMENT CORPORATION AND SHALL NOT BE REPRODUCED OR COPIED OR USED IN WHOLE OR IN PART AS THE BASIS FOR THE MANUFACTURE OR SALE OF ITEMS WITHOUT WRITTEN PERMISSION. COPYRIGHT © 1970 DIGITAL EQUIPMENT CORPORATION"

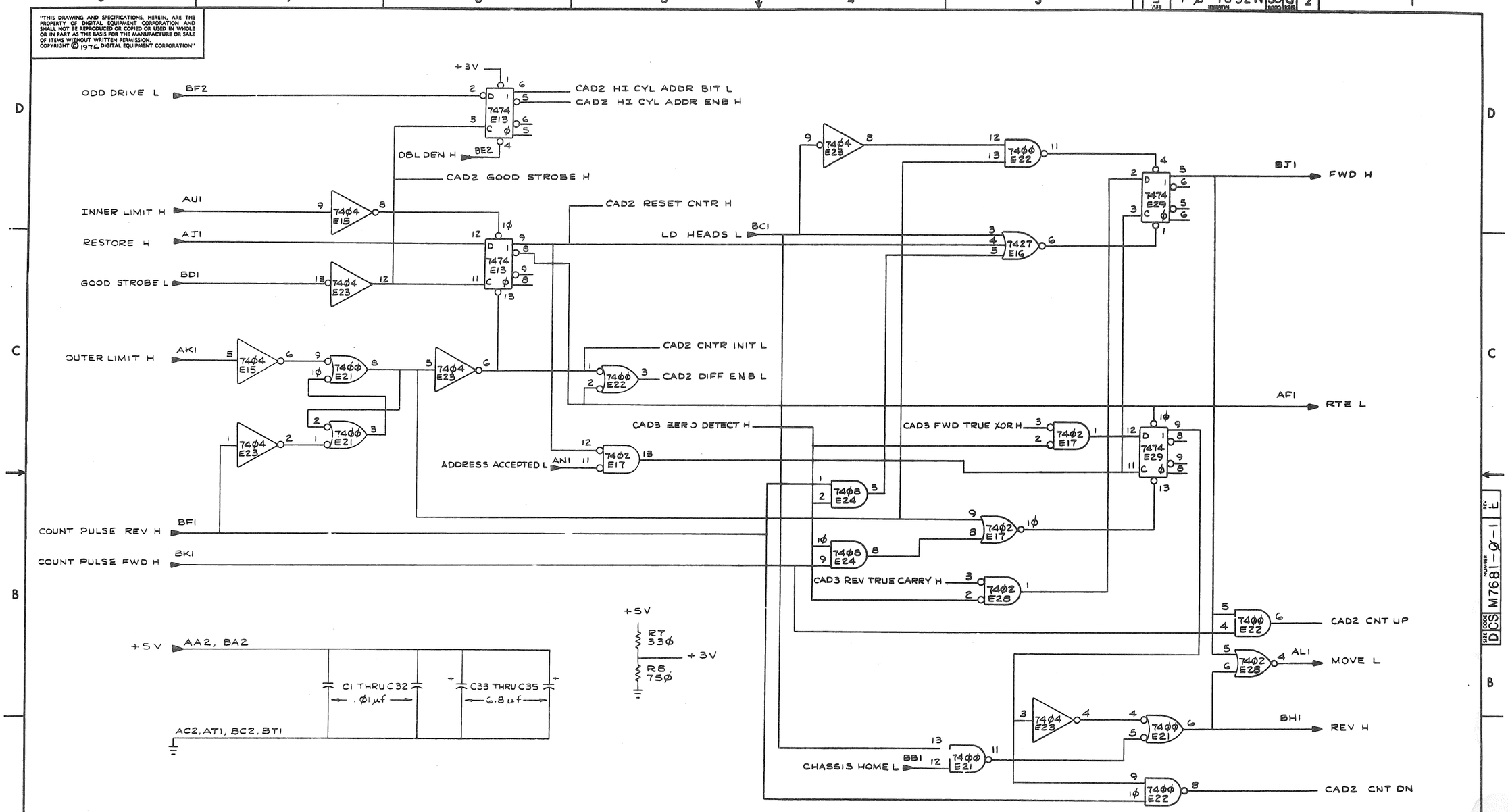

REVISIONS		
CHK	CHANGE NO.	REV.

TITLE	SIZE	CODE	NUMBER	REV.
CYLINDER ADDRESS AND DIFFERENCE (CAD2)	D	CS	M7681-0-1	E
SCALE —	SHEET 2 OF 3	DIST.		

DEC FORM NO. DRD 138

"THIS DRAWING AND SPECIFICATIONS, HEREIN, ARE THE PROPERTY OF DIGITAL EQUIPMENT CORPORATION AND SHALL NOT BE REPRODUCED OR COPIED OR USED IN WHOLE OR IN PART AS THE BASIS FOR THE MANUFACTURE OR SALE OF ITEMS WITHOUT WRITTEN PERMISSION. COPYRIGHT © 1970 DIGITAL EQUIPMENT CORPORATION"

NOTE:
1. FOR RK05J I.C. LOCATION E1 IS USED
FOR RK05F I.C. LOCATION E2 IS USED
2. FOR RK05J S1 IS IN THE ON POSITION
FOR RK05F S1 IS IN THE OFF POSITION

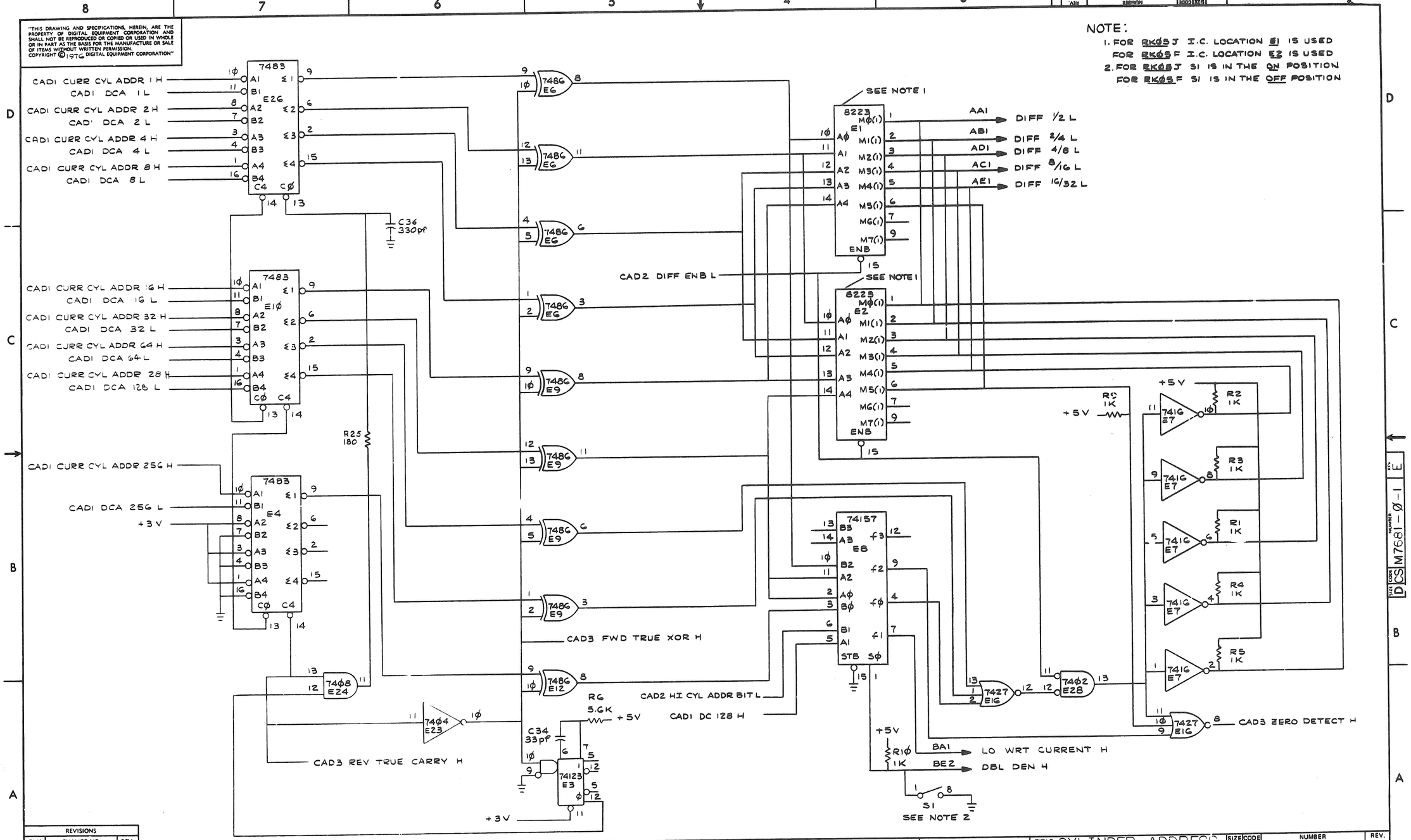

REVISIONS		
CHK	CHANGE NO.	REV

TITLE CYLINDER ADDRESS AND DIFFERENCE (CAD3)
SIZE D CODE CS NUMBER M7681-Ø-1 REV. E
SCALE — SHEET 3 OF 3 DIST.

DEC FORM NO. DRD 138

This drawing and specifications herein are the property of Digital Equipment Corporation and shall not be reproduced or copied or used in whole or in part as the basis for the manufacture or sale of items without written permission

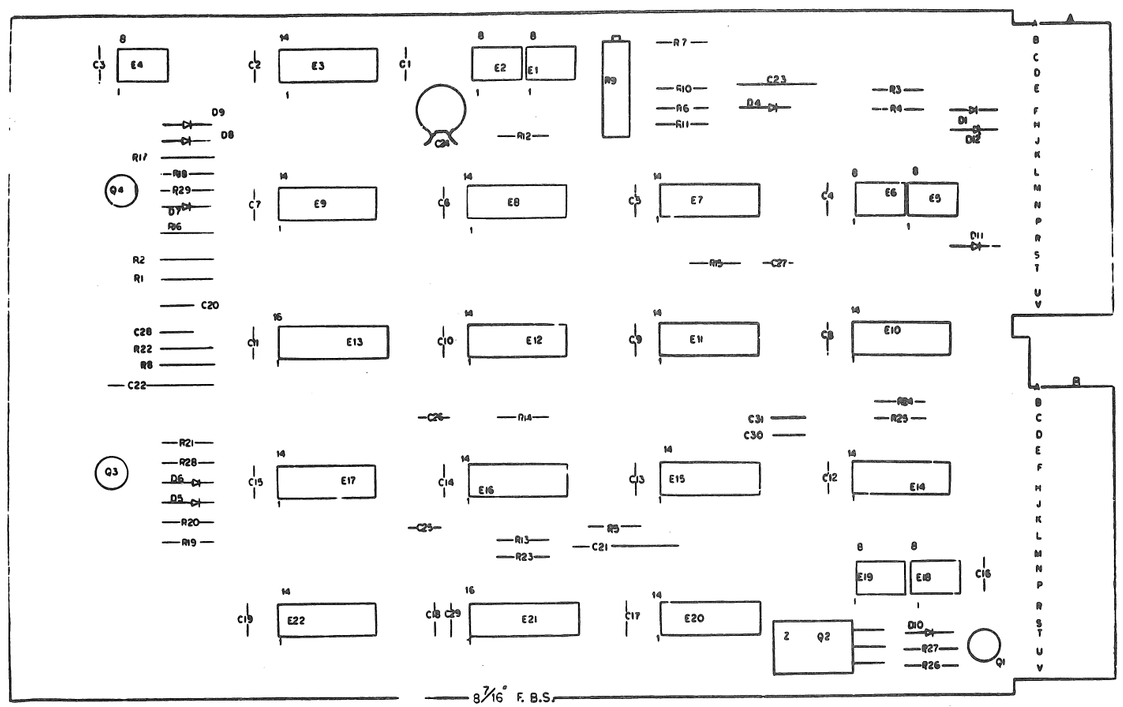

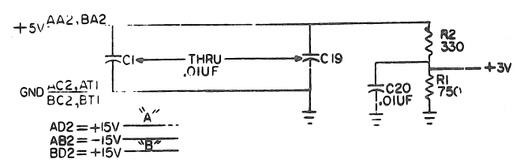

QTY	REF DESIGNATION	DESCRIPTION	PART NO	ITEM NO
1	C24	CAP .047UF 15V DISC	[illegible]	[illegible]
1	D12	DIODE IN5243B 13V 5%	1110570	48
1		NUT KEP #4	9000[illegible]	47
1		SCREW 4-40 X 5/16	9006616-[illegible]	46
2		HANDLE, FLIP CHIP - MAGENTA	9006[illegible]	45
4		EYELET #031-7	9000[illegible]	45
1	E1	I.C. DEC 3001	1913082	44
6	E4, 4, 6, 5, 18, 19	I.C. DEC 7451	1900[illegible]	43
2	E21, 13	I.C. DEC 7423	1910439	42
2	E22, 17	I.C. DEC 7473	1909022	41
2	E9, 15	I.C. DEC 7474	1905547	40
2	E12, 10	I.C. DEC 7413	1905575	39
2	E11, 8	I.C. DEC 7400	1909885	38
1	E20	I.C. DEC 7402	1909004	37
4	E3, 7, 16, 14	I.C. DEC 7400	1905575	36
1	Q2	TRANSISTOR DEC 6403	1510171	35
1	Q3	TRANSISTOR DEC 6534D	1501439-00	34
1	Q1	TRANSISTOR DEC 2219	1501081	33
1	Q4	TRANSISTOR DEC 6531	1509336	32
1	R9	RES. 10K 3/4W 10% 76PR	1304143-10	31
1	R6	RES. 10M 1/4W 5%	1302666	30
2	R7, 10	RES. 1M 1/4W 5%	1300595	29
				28
				27
5	R17, 5, 22, 23, 8	RES. 10K 1/4W 5%	1300479	26
1	R18	RES. 5.6K 1/4W 5%	1301874	25
2	R11, R21	RES. 4.7K 1/4W 5%	1300447	24
1	R4	RES. 680 1/4W 5%	1300426	23
1	R28	RES. 1.5K 1/4W 5%	1300391	22
9	R12, 13, 14, 29, 15, 20, 24, 25, 26	RES. 1K 1/4W 5%	1300365	21
1	R1	RES. 750 1/4W 5%	1301401	20
2	R16, 19	RES. 470 1/4W 5%	1300316	19
2	R2, 3	RES. 330 1/4W 5%	1300295	18
1	R27	RES. 100 1/4W 5%	1300229	17
A/R		GRIPLETS	1210244-0	16
2	D5, 7	DIODE 1N759S 12V	1110643	15
1	D4	DIODE 1N748 3.9V	1100121	14
	D6	DIODE 1N746A 3.3V	1104860	13
2	D9, 10	DIODE 1N4001	1102942	12
2	D1, 11	DIODE D670	1102162	11
1	D8	DIODE D664	1100114	10
2	C28, 29	CAP. 470PF 100V 5% D.M.	1000024	9
1	C23	CAP. .15UF 35V 20% TANT	1002180	8
1	C22	CAP. 10UF 20V 10% TANT	1004813	7
1	C21	CAP. 15UF 20V 10% TANT	1004812	6
25	C1 - 20, 25 - 27, 30, 31	CAP. .01UF 100V 20% DISC	1001610	5
1		ETCHED CIRCUIT BOARD	5009714	4
		MODULE ECO HISTORY	B-MH-M7701-0-6	3
		ASSY/DRILLING HOLE LAYOUT	B-AH-M7701-0-5	2
		X-Y COORDINATE HOLE LOCATION	K-CG-M7701-0-4	1
QTY	REP. DESIGNATION	DESCRIPTION	DIG. PART NO.	ITEM NO.
		PARTS LIST		

PARTS LIST

ETCH BOARD REV K

DEC NO.	EIA NO.	DEC NO.	EIA NO.
IN748 3.9V	SAME	DEC6534D	MPS6534
IN746A 3.3V	SAME	DEC4403	
IN4001	SAME	IN759 S	SAME
D670	IN3653		
D664	IN3606		
DEC6531	MPS6531		
DEC2219	2N2219		

SEMICONDUCTOR CONVERSION CHART

REV	CHANGE NO.	CHK	REVISIONS
N	M7701-00009		[illegible]
M	M7701-00006		[illegible]
L	M7701-00007		[illegible]
K	M7701-0006		[illegible]
J	M7701-00005		[illegible]
H	M7701-00004		[illegible]
F	M7701-00003		[illegible]
E	M7701-00002		[illegible]
D	M7701-0000H-A		[illegible]

DRN. Roger V. Duchette DATE 10-20-71
CHK'D. Harry Moore DATE 11-3-71
ENG. [illegible] DATE 12-7-71
PROJ. ENG. [illegible] DATE 12-9-71
PROD. [illegible] DATE 1/18/72
NEXT HIGHER ASSY
SCALE
SHEET 1 OF 2

digital EQUIPMENT CORPORATION MAYNARD MASSACHUSETTS

TITLE DISK ENG. CONTROL + INTERLOCK

SIZE D CODE CS NUMBER M7701-0-1 REV.

DIST.

DEC FORM NO. DRD-139

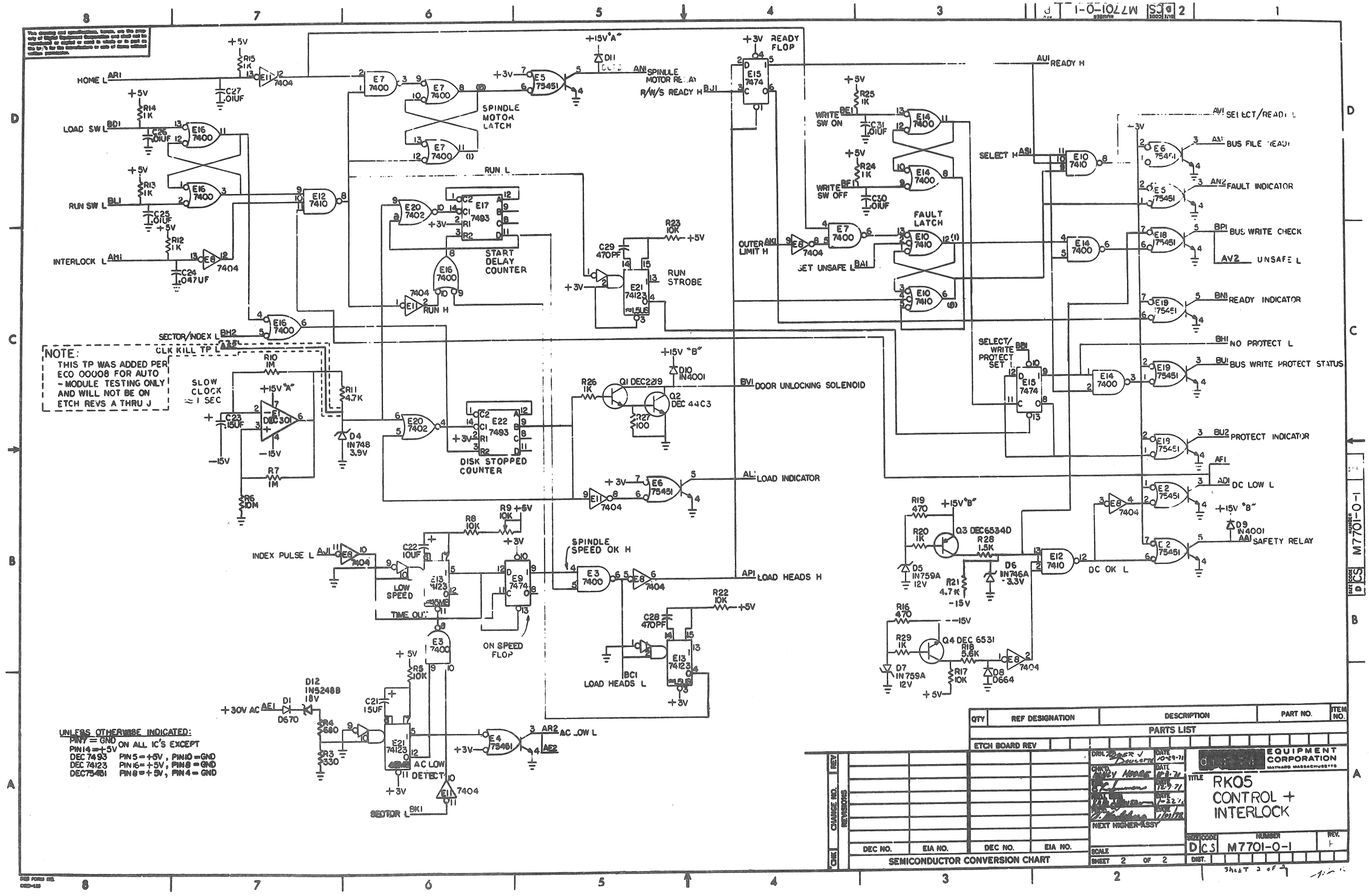
HOME L
LOAD SW L
RUN SW L
INTERLOCK L
SPINDLE MOTOR LATCH
SPINDLE MOTOR RE..A
R/W/S READY H
READY FLOP
READY H
WRITE SW ON
WRITE SW OFF
FAULT LATCH
SELECT H
OUTER LIMIT H
SET UNSAFE L
SELECT/READY L
BUS FILE READY
FAULT INDICATOR
BUS WRITE CHECK
UNSAFE L
READY INDICATOR
NO PROTECT L
BUS WRITE PROTECT STATUS
PROTECT INDICATOR
DC LOW L
SAFETY RELAY
DC OK L
RUN L
START DELAY COUNTER
RUN H
RUN STROBE
SECTOR/INDEX L
CLK KILL TP L
SLOW CLOCK ≈ 1 SEC
DISK STOPPED COUNTER
DOOR UNLOCKING SOLENOID
LOAD INDICATOR
INDEX PULSE L
LOW SPEED
TIME OUT
ON SPEED FLOP
SPINDLE SPEED OK H
LOAD HEADS H
LOAD HEADS L
+30V AC
AC LOW DETECT
AC LOW L
SECTOR L
SELECT/WRITE PROTECT SET
NOTE: THIS TP WAS ADDED PER ECO 00008 FOR AUTO - MODULE TESTING ONLY AND WILL NOT BE ON ETCH REVS A THRU J
UNLESS OTHERWISE INDICATED:
PIN7 = GND
PIN14 = +5V ON ALL IC'S EXCEPT
DEC 7493 PIN5 = +5V, PIN10 = GND
DEC 74123 PIN16 = +5V, PIN8 = GND
DEC75451 PIN8 = +5V, PIN4 = GND
SEMICONDUCTOR CONVERSION CHART
DEC NO. | EIA NO. | DEC NO. | EIA NO.
QTY | REF DESIGNATION | DESCRIPTION | PART NO. | ITEM NO.
PARTS LIST
ETCH BOARD REV
NEXT HIGHER ASSY
SCALE
SHEET 2 OF 2
EQUIPMENT CORPORATION
MAYNARD MASSACHUSETTS
TITLE RK05 CONTROL + INTERLOCK
SIZE CODE D CS
NUMBER M7701-0-1
REV. F
DIST.
M7701-0-1

"THIS DRAWING AND SPECIFICATIONS, HEREIN, ARE THE PROPERTY OF DIGITAL EQUIPMENT CORPORATION AND SHALL NOT BE REPRODUCED OR COPIED OR USED IN WHOLE OR IN PART AS THE BASIS FOR THE MANUFACTURE OR SALE OF ITEMS WITHOUT WRITTEN PERMISSION.
COPYRIGHT © 1976 DIGITAL EQUIPMENT CORPORATION"

NOTES:

8	8	Q1 THRU Q4, Q11 THRU Q14	TRANSISTOR 2N5245	1509681	49	REF	REF	
6	6	Q5 THRU Q10	TRANSISTOR DEC 65340	1503409-00	50	REF	REF	
1	1	E1	I.C. DEC 7404	1909686	51	REF	REF	
1	1	E2	I.C. DEC 7413	1909989	52	1	1	
2	2	E3, E4	I.C. DEC 301	1910282	53	4	4	C2, C3, C4, C5
1	1	E5	I.C. DEC 7400	1905573	54	4	3	C6
7	7	E7, E8, E11 THRU E15	I.C. DEC 72741	1910298-00	55	1	1	C7
4	4		EYELET #G54-7	9006732	56	3	3	C8, C10, C14
2	2		HANDLE, FLIP CHIP GREEN	9008337-01	57	11	11	C9, C11, C12, C13, C15 THRU C20
A/R	A/R		GRIPLET	12/0244-0	58	7	7	D1 THRU D4, D23 THRU D28
1	—	R22	RES 200K, 1/8W, 1%	1305336	59	10	10	D5 THRU D14
1	—	R23	RES 137K, 1/8W, 1%	1305442	60	2	2	D15, D16
2	—	R13, R19	RES 9.09K, 1/8W, 1%	1304855	61	4	4	D19 THRU D22
1	—	R74	RES 2.94K, 1/8W, 1%	1301981	62	7	7	R1, R15, R17, R46, R49, R52, R55
3	3	E6, E9, E10	IC DEC 72741	1910298-01	63	1	1	R2
						1	1	R3
						1	—	R4
						—	1	R4
						—	1	R5
						1	—	R5
						1	—	R6
						—	1	R6
						1	—	R7
						—	1	R7
						1	—	R8
						—	1	R8
						5	5	R9, R57, R59, R61, R70
						12	12	R10, R11, R32, R33, R35, R36, R38, R39, R67, R69, R81, R83.
						2	2	R12, R72
						—	2	R13, R19
						9	9	R14, R16, R43, R44, R45, R48, R51, R54, R68
						5	5	R18, R47, R50, R53, R56
						1	1	R20
						1	1	R21
						—	1	R22
						5	6	R23, R30, R61, R62, R65, R79
						5	5	R29, R64, R73, R76, R78
						3	3	R31, R66, R80
						3	3	R37, R40, R87
						5	5	R38, R60, R62, R71, R82
						1	1	R75
						2	2	R84, R85
						1	1	R86
						6	6	R89 THRU R94
						1	1	R88
						3	3	R28, R63, R77
						—	1	R74
						3	3	R34, R95, R96

		X-Y COORDINATE HOLE LOCATION	X-CO-G938-0-4	1
		ASSY/DRILLING HOLE LAYOUT	E-AH-G938-0-5	2
		MODULE ECO HISTORY	B-MH-G938-0-6	3
		ETCHED CIRCUIT BOARD	5009388	4
C2, C3, C4, C5		CAP .015 UF 50V 2% POLY CARB	1010646	5
C6		CAP 8200 PF 100V MICA	1000061	6
C7		CAP .022 UF 100V 10% MYLAR	1002323	7
C8, C10, C14		CAP 15 UF 20V 10% S. TANT	1004812	8
C9, C11, C12, C13, C15 THRU C20		CAP .01 UF 100V 20% DISC.	1001610-01	9
D1 THRU D4, D23 THRU D28		DIODE D662	1100113	10
D5 THRU D14		DIODE D664	1100114	11
D15, D16		DIODE 1N758A 10V	1100125	12
D19 THRU D22		DIODE 1N746A	1104860	13
R1, R15, R17, R46, R49, R52, R55		RES. 15K 1/4 W 5%	1300496	14
R2		RES. 13.3K 1/4 W 1% MF	1312565	15
R3		RES. 9.09K 1/8 W 1% MF	1304855	16
R4		RES. 34.8K 1/8W 1% MF	1303156	17
R4		RES. 68.1K 1/8W 1% MF	1305252	18
R5		RES. 34.8K 1/8W 1% MF	1303156	19
R5		RES. 21.5K 1/8W 1% MF	1303155	20
R6		RES. 11.5K 1/8W 1% MF	1309415	21
R6		RES. 21.5K 1/8W 1% MF	1303155	22
R7		RES. 5.62K 1/8W 1% MF	1305128	23
R7		RES. 11.5K 1/8W 1% MF	1309415	24
R8		RES. 2.74K 1/8W 1%	1304868	25
R8		RES. 5.62K 1/8W 1%	1305128	26
R9, R57, R59, R61, R70		RES. 10K 1/8W 1% MF	1303312	27
R10, R11, R32, R33, R35, R36, R38, R39, R67, R69, R81, R83.		RES. 19.6K 1/8W 1% MF	1309419	28
R12, R72		RES. 6.81K 1/8W 1% MF	1304870	29
R13, R19		RES. 4.64K 1/8W 1% MF	1304856	30
R14, R16, R43, R44, R45, R48, R51, R54, R68		RES. 1.5K 1/4 W 5%	1300391	31
R18, R47, R50, R53, R56		RES. 3.9K 1/4 W 5%	1300444	32
R20		RES. 200K 1/8W 1% MF	1305336	33
R21		RES. 3.83K 1/8W 1% MF	1309413	34
R22		RES. 100K 1/4 W 5%	1302466	35
R23, R30, R61, R62, R65, R79		RES. 75K 1/4W 5%	1304841	36
R29, R64, R73, R76, R78		POT. 10K 3/4W 20% 76PR	1309143-10	37
R31, R66, R80		POT. 2K 3/4W 10% 76PR	1309143-08	38
R37, R40, R87		RES. 330 1/8W 5%	1300295	39
R38, R60, R62, R71, R82		RES. 511 1/8W 1% MF	1302411	40
R75		RES. 21.3K 1/8W 1% MF	1309418	41
R84, R85		RES. 10 1/2W 5%	1300168	42
R86		RES. 2.7 1/2W 10%	1309444	43
R89 THRU R94		RES. 22 1/4W 5%	1301969	44
R88		RES. 750 1/4W 5%	1301401	45
R28, R63, R77		RES. 1.96K 1/8W 1% MF	1304833	46
R74		RES. 1.47K 1/8W 1% MF	1305108	47
R34, R95, R96		RES. 10K 1/4W 5%	1300479	48

G938-0-1 REV S

QTY	REF. DESIGNATION	DESCRIPTION	PART NO.	ITEM NO.

PARTS LIST

ETCH BOARD REV. K

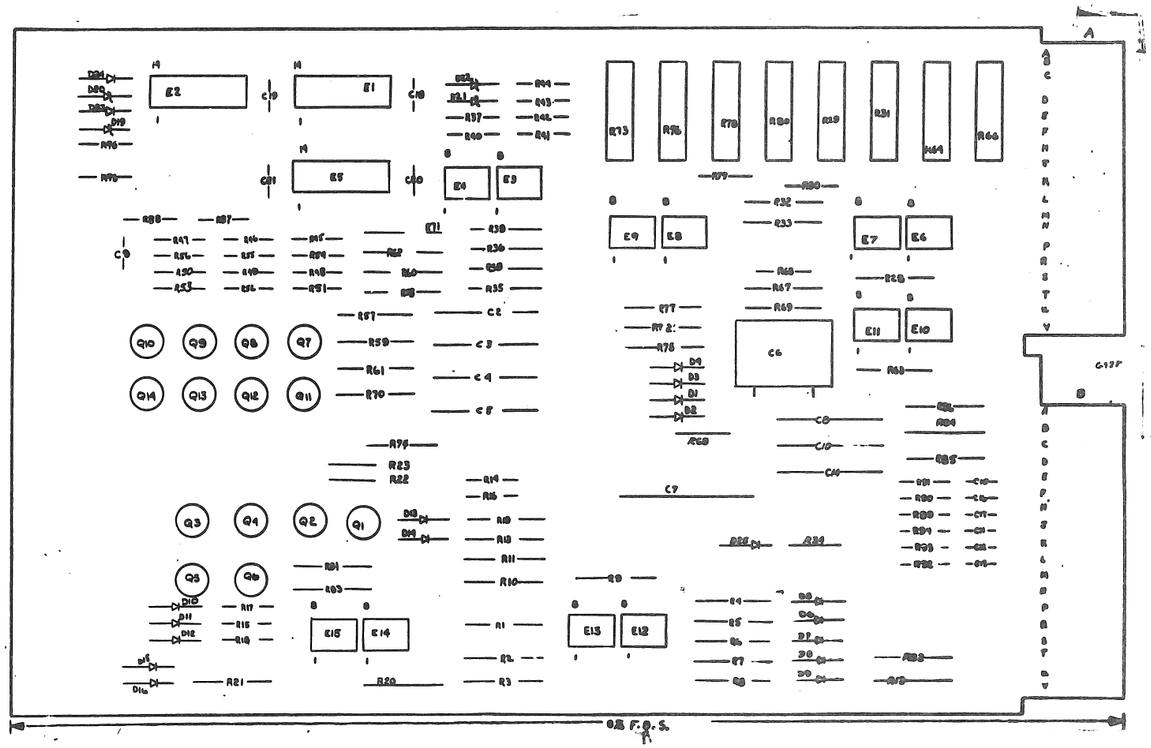

72741	SEE SHT 2		
LM301	SEE SHT 2		
IC TYPE	GND	+5V	

GND AND 5V ARE USUALLY PIN 7 AND 14 RESPECTIVELY EXCEPTIONS ARE STATED ABOVE

IC PIN LOCATIONS

65340	NONE		
2N5245			
D662	1N645		
D664	1N3606		
1746A	SAME		
DEC NO.	EIA NO.	DEC NO.	EIA NO.

SEMICONDUCTOR CONVERSION CHART

DRN. R. DOUCETTE	DATE 12-8-71	digital
CHK'D. DEVALL	DATE 12-9-71	TITLE DEC PACK HEAD POSITION SERVO PREAMP RK5-1
ENG. D. JENSEN	DATE 2-30-71	
PROJ. ENG. D. JENSEN	DATE 2-30-71	
PROD. A. KARLSBERG	DATE 2-3-72	
NEXT HIGHER ASSY		
SCALE —		SIZE D CODE CS NUMBER G938-0-1 REV. S
SHEET 1 OF 2		DIST.

2-3-77	S. RADOFF	A. Vesvolos 11-FEB-77	S	
		G938-00011		
	J. RINALDIS			
		G938-00010	R	
	J. RINALDIS			
		G938-00009		
	J. RINALDIS	13-DEC-76		
	J. RINALDIS	29-NOV-76		
	REVISED & REDRAWN	G938-00008	N	ECO
				CHANGE NO.
				REVISIONS

This drawing and specifications, herein, are the property of Digital Equipment Corporation and shall not be reproduced or copied or used in whole or in part as the basis for the manufacture or sale of items without written permission. © 1973 DIGITAL EQUIP. CORP.

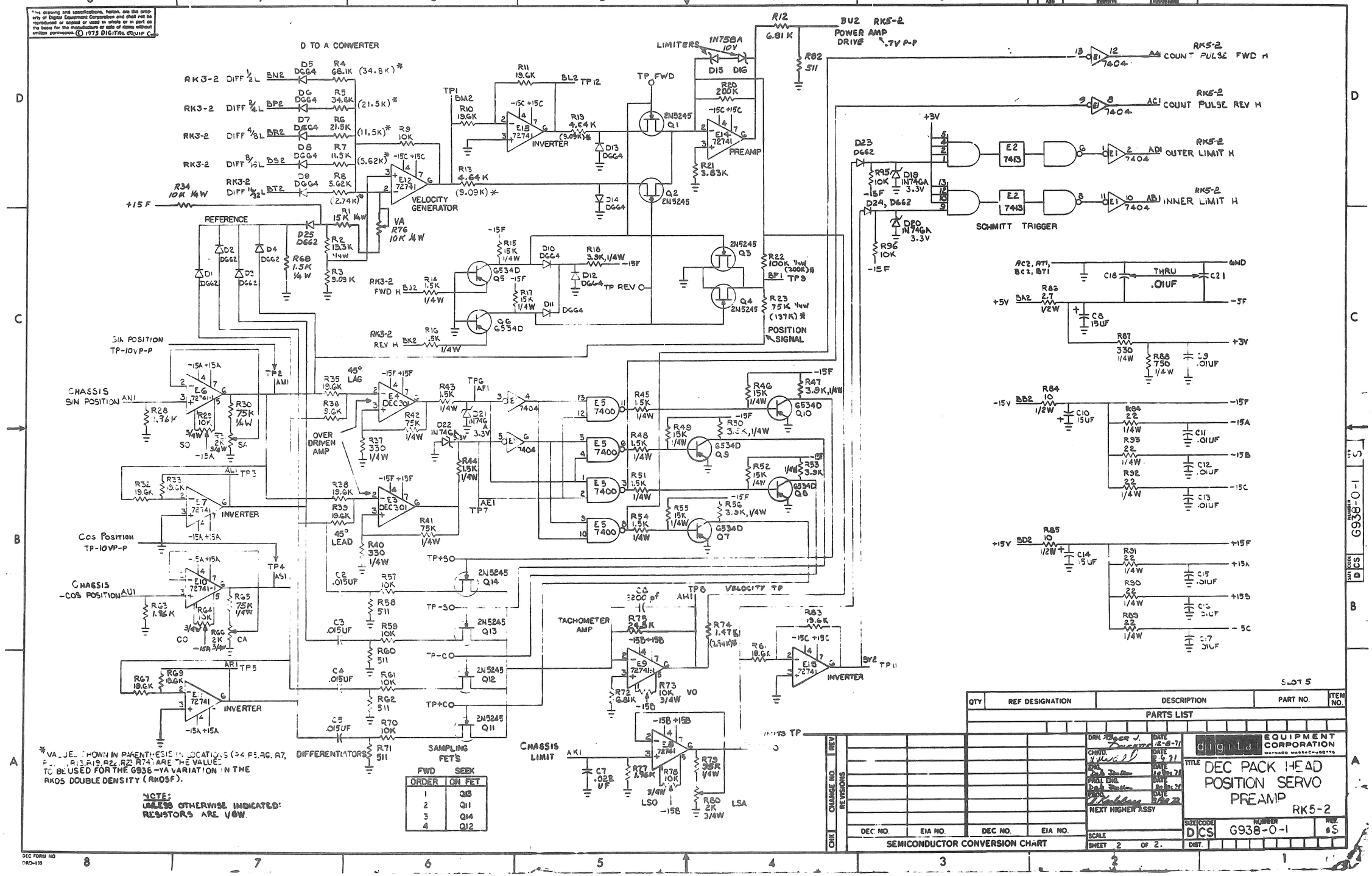

*VALUES SHOWN IN PARENTHESIS IN LOCATIONS (R4, R5, R6, R7, R8, R13, R19, R26, R27, R74) ARE THE VALUES TO BE USED FOR THE G936 -YA VARIATION IN THE RK05 DOUBLE DENSITY (RK05F).

NOTE:
UNLESS OTHERWISE INDICATED:
RESISTORS ARE 1/8W.

QTY	REF DESIGNATION	DESCRIPTION	PART NO.	ITEM NO.

PARTS LIST

DEC NO.	EIA NO.	DEC NO.	EIA NO.

SEMICONDUCTOR CONVERSION CHART

REVISIONS: REV | CHANGE NO. | CHK

DRN. Roger J. Dwyer DATE 12-8-71
CHKD. DATE 12-9-71
ENG. DATE 12-21-71
PROJ. ENG. DATE 12-21-71
DESIG. DATE 12-21-71
NEXT HIGHER ASSY
SCALE
SHEET 2 OF 2.

digital EQUIPMENT CORPORATION MAYNARD, MASSACHUSETTS

TITLE DEC PACK HEAD POSITION SERVO PREAMP RK5-2

SIZE D | CODE CS | NUMBER G938-0-1 | REV. S

DIST.

SLOT 5

DEC FORM NO DRD-135

THIS SCHEMATIC IS FURNISHED ONLY FOR TEST AND MAINTENANCE PURPOSES. THE CIRCUITS ARE PROPRIETARY IN NATURE AND SHOULD BE TREATED ACCORDINGLY
COPYRIGHT 1971 BY DIGITAL EQUIPMENT CORPORATION

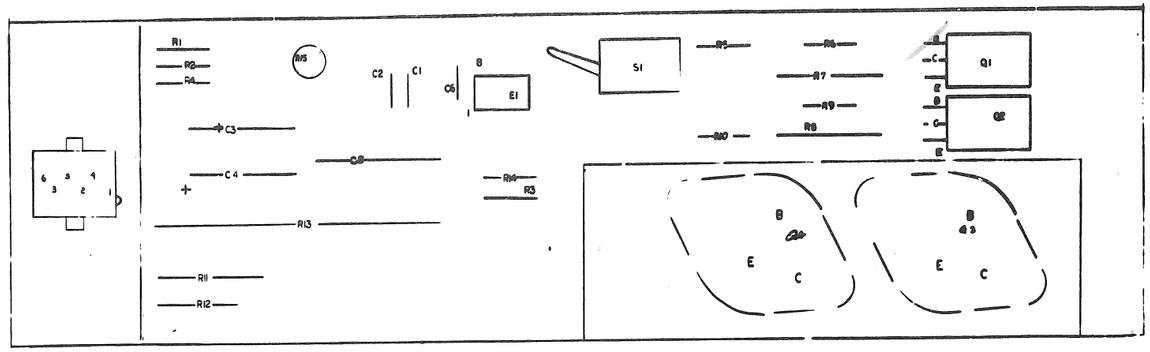

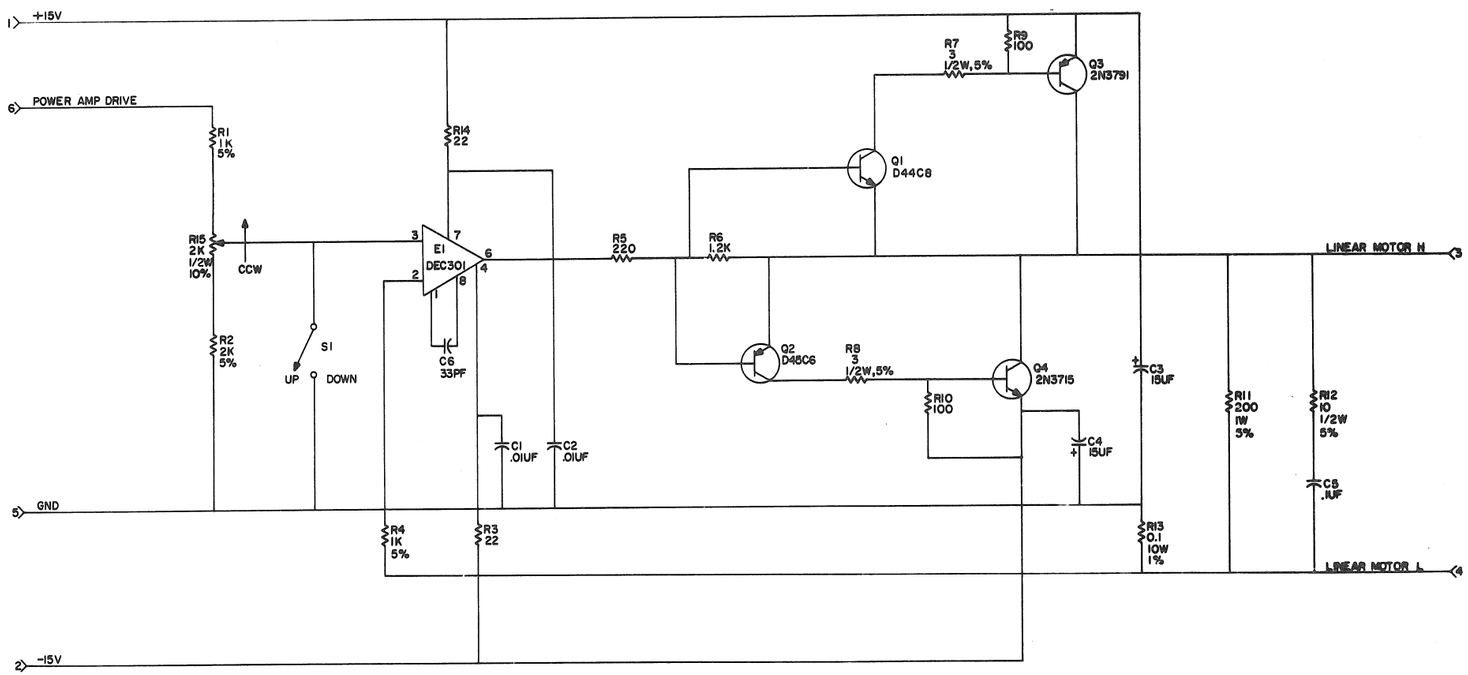

UNLESS OTHERWISE INDICATED:
RES. ARE 1/4W, 10%
R13 IS A CURRENT SAMPLING RES.

REVISIONS			
CHG. ORDER NO.			
00001	E	B. Thiele	4-5-71
		D. JENSEN	
000021	H	B. Thiele	4-5-71
		D. JENSEN	
	J		4-19-71
		D. JENSEN	
	K		8-31-71
		J. RINALDI	

DRN B. Thiele	DATE 11/30/71	
CHK'D	DATE 12-7-71	
ENG D. A. T. Jensen	DATE 12-10-71	
MGR	DATE	

TRANSISTOR & DIODE CONVERSION CHART

DEC	EIA	DEC	EIA
2N3791			
2N3715			
D44C8			
D45C6			

EQUIPMENT CORPORATION
MAYNARD, MASSACHUSETTS

TITLE DECPAK HEAD POS. SERVO PWR. AMP.

SIZE	CODE	NUMBER	REV
D	CS	H804-0-1	K

PRINTED CIRCUIT REV. K

DEC FORM NO. 030 110

This drawing and specifications, herein, are the property of Digital Equipment Corporation and shall not be reproduced or used in whole or in part without the same for any manufacture or sale of Digital Equipment Corporation equipment. © COPYRIGHT 1974 DIGITAL EQUIP. CORP. MAYNARD, MASS.

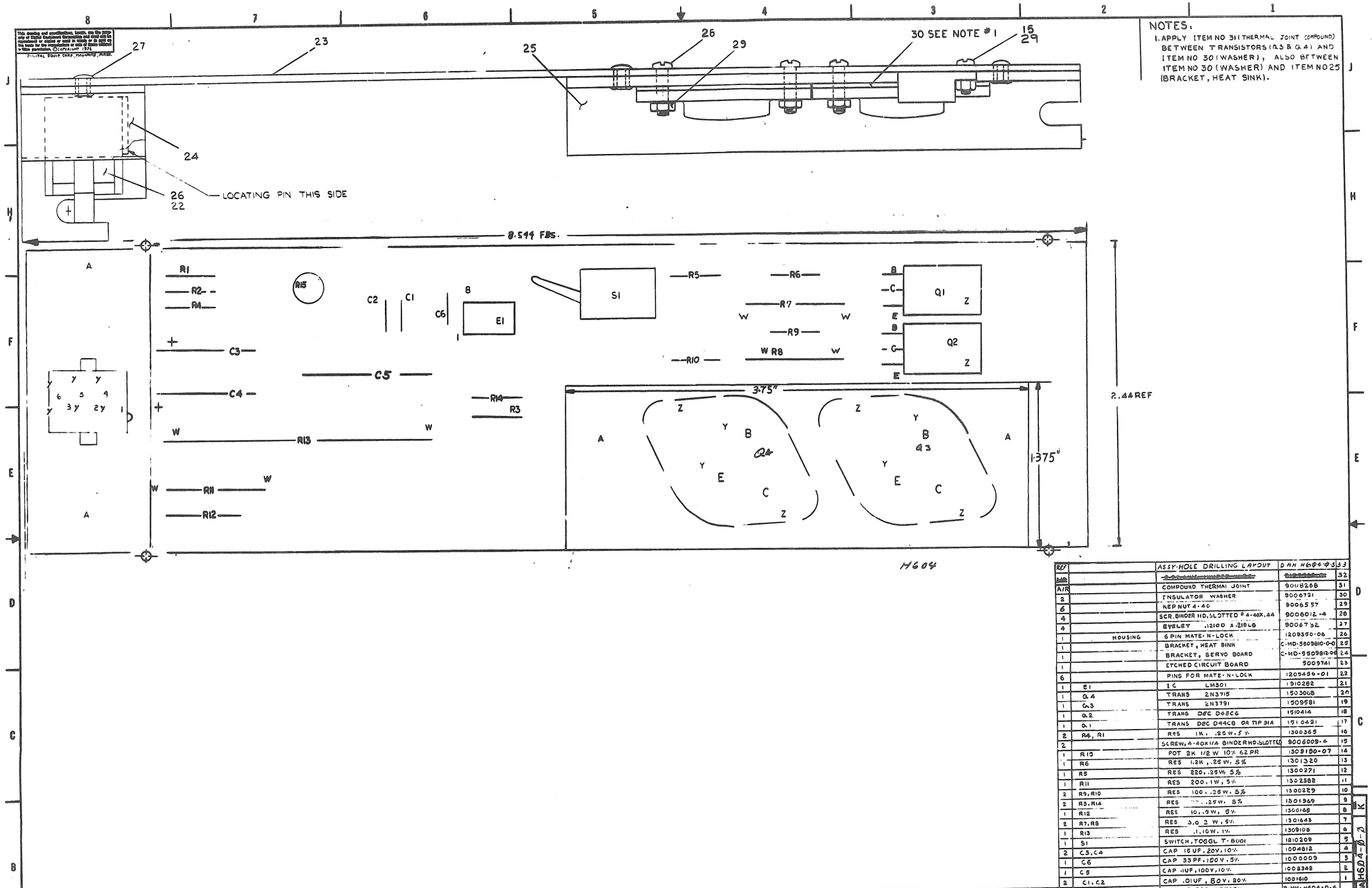

NOTES.

1. APPLY ITEM NO 31 (THERMAL JOINT COMPOUND) BETWEEN TRANSISTORS (Q3 & Q4) AND ITEM NO 30 (WASHER), ALSO BETWEEN ITEM NO 30 (WASHER) AND ITEM NO 25 (BRACKET, HEAT SINK).

QTY.	REF DESIGNATION	DESCRIPTION	PART NO.	ITEM
		ASSY-HOLE DRILLING LAYOUT	D AH H604-0-3-3	
				32
A/R		COMPOUND THERMAL JOINT	9008266	31
2		INSULATOR WASHER	9006721	30
6		KEP NUT 4-40	9006557	29
4		SCR. BINDER HD. SLOTTED #4-40X.44	9006012-4	28
4		EYELET .12100 A .310LG	9006732	27
1	HOUSING	6 PIN MATE-N-LOCK	1209350-06	26
1		BRACKET, HEAT SINK	C-MD-5509810-0-0	25
1		BRACKET, SERVO BOARD	C-MD-5509812-0-0	24
1		ETCHED CIRCUIT BOARD	5009741	23
6		PINS FOR MATE-N-LOCK	1209436-01	22
1	E1	IC LM301	1910282	21
1	Q4	TRANS 2N3715	1503068	20
1	Q3	TRANS 2N3791	1509581	19
1	Q2	TRANS DEC D48C6	1510416	18
1	Q1	TRANS DEC D44C8 OR TIP 31A	1510421	17
2	R4, R1	RES 1K, .25W, 5%	1300365	16
2		SCREW, 4-40X1/4 BINDER HD. SLOTTED	9006009-4	15
1	R15	POT 2K 1/2 W 10% 62 PR	1309150-07	14
1	R6	RES 1.2K, .25W, 5%	1301320	13
1	R9	RES 820, .25W 5%	1300271	12
1	R11	RES 200, 1W, 5%	1302388	11
2	R9, R10	RES 100, .25W, 5%	1300229	10
2	R3, R14	RES [illegible], .25W, 5%	1301969	9
1	R12	RES 10, .5W, 5%	1300168	8
2	R7, R8	RES 3.0 2 W, 5%	1301643	7
1	R13	RES .1, 10W, 1%	1309108	6
1	S1	SWITCH, TOGGL T-8101	1810209	5
2	C3, C4	CAP 15UF, 20V, 10%	1004812	4
1	C6	CAP 33PF, 100V, 5%	1000009	3
1	C5	CAP .1UF, 100V, 10%	1008348	2
2	C1, C2	CAP .01UF, 50V, 20%	1001610	1
		MODULE ECO HISTORY	B-MH-H604-0-6	
		X-Y COORDINATE HOLE LOCATION	K-CO-H604-0-4	
		CIRCUIT SCHEMATIC	D-CS-H604-0-1	

PARTS LIST

QTY.	REF DESIGNATION	DESCRIPTION	PART NO.	ITEM
1	R2	RES 2K 1/4W 5%	1302388	36
				35
				34

ETCH BOARD REV K

DEC NO.	EIA NO.	DEC NO.	EIA NO.
		2N3715	
		2N3791	
		D48C6	
		D44C8	

SEMICONDUCTOR CONVERSION CHART

FIRST USED ON OPT/MOD RK05

IC TYPE	GND	+5V
GND AND 5V ARE NORMALLY PIN 7 AND 14 RESPECTIVELY EXCEPTIONS ARE STATED ABOVE		

IC PIN LOCATIONS

FROM NO	ABS	FROM PT	TO PT

JUMPER LIST

J. TRIVALDI	11-12-74	K	
H. Wong	7-24-73		
D. JENSEN	7-24-73		
S. Rabb	1-15-73		
H604-00003	4-26-72	J	
D. JENSEN	4-26-72		
B. Neale	4-3-72	H	
D. JENSEN	3-28-72		
H604-00002	3-28-72		
D. JENSEN	2-16-72	F	
B. Neale			
H604-00001		E	

NEXT HIGHER ASSY. D-UA-RK05-0-0

EQUIPMENT CORPORATION

TITLE HEAD POSITION SERVO POWER AMP

SIZE A

E UA H604-0-0 REV K

SHEET 1 OF 1

THIS SCHEMATIC IS FURNISHED ONLY FOR TEST AND MAINTENANCE PURPOSES. THE CIRCUITS ARE PROPRIETARY IN NATURE AND SHOULD BE TREATED ACCORDINGLY.
COPYRIGHT 1971 BY DIGITAL EQUIPMENT CORPORATION

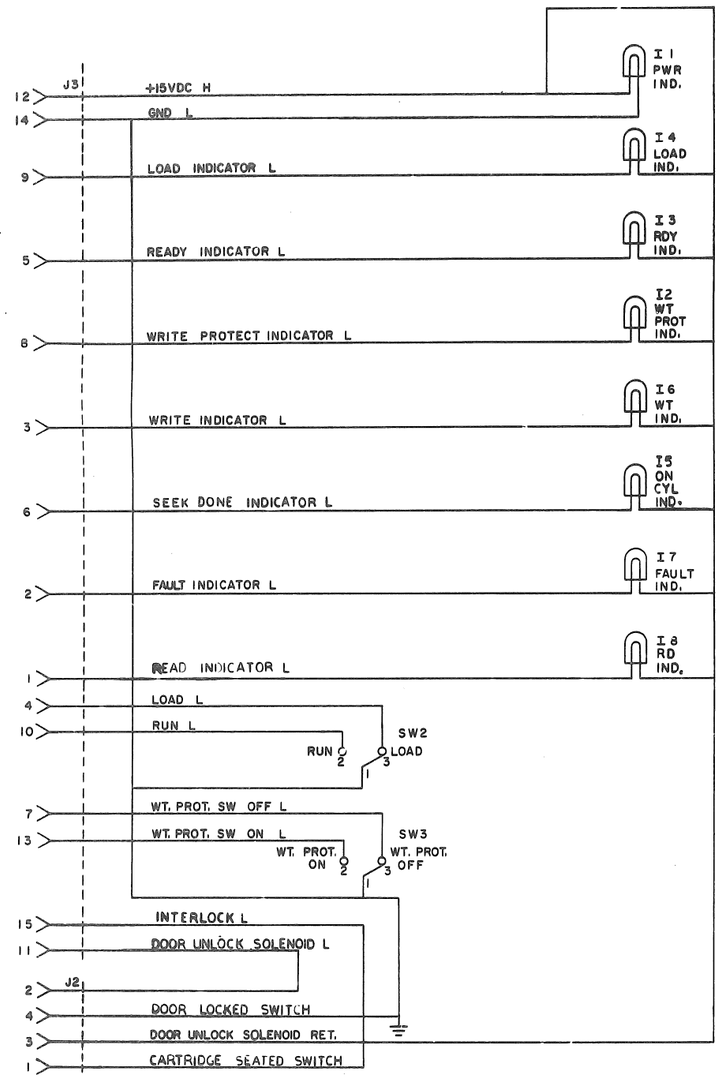

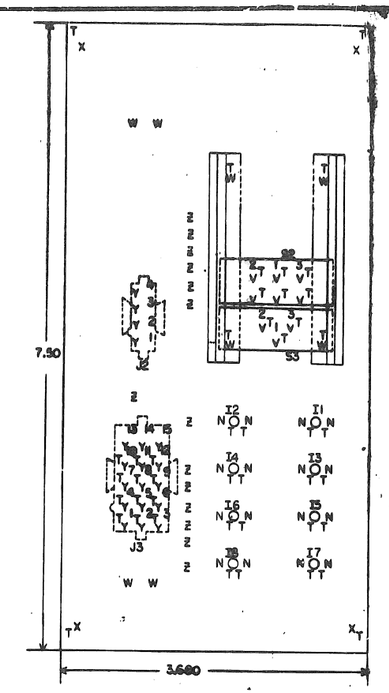

REVISIONS			
CHG	CHG NO.	REV.	
	00001	B	D. JENSEN
	00001	C	D. JENSEN
	00001	E	J. RINALDIS

DRN.	S. COOPER	DATE	11-20-71
CHK'D		DATE	11-23-71
ENG.	D. Jensen	DATE	19 Dec 71
PROD.		DATE	

TRANSISTOR & DIODE CONVERSION CHART

DEC	EIA	DEC	EIA

digital EQUIPMENT CORPORATION MAYNARD, MASSACHUSETTS

TITLE RK05 CONTROL PANEL

RK7-1

SIZE	CODE	NUMBER	REV.
C	CS	5409698-0-1	E

PRINTED CIRCUIT REV. D

DEC FORM NO.

SIZE C | CODE CS | NUMBER 5409698-0-1 | REV. E

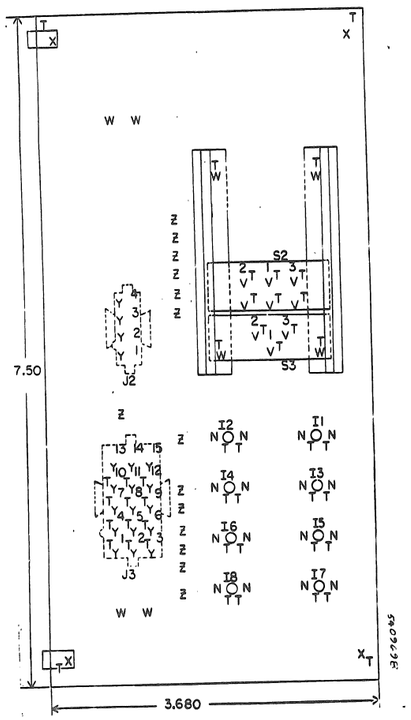

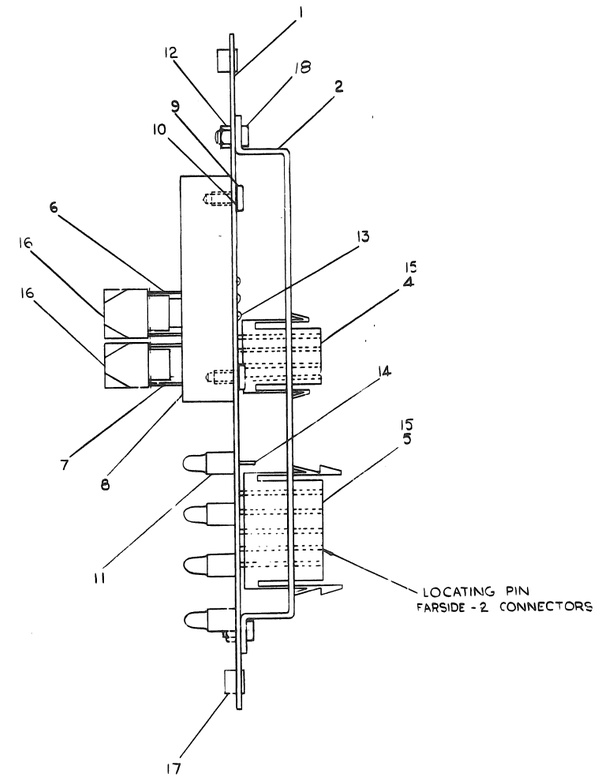

REF				
		ASSY/DRILLING HOLE LAYOUT	D-AH-5409698-0-0	19
4		SCR. PHL PAN HD #4-40 x 5/16 LG	9006010-1	18
2		NUT CLIP #6-32	9006423	17
2		SWITCH BUTTON	1205317-07	16
19		PIN SOCKET MATE-N-LOCK	1209466	15
16		TERMINAL SOLDERLESS	9007812	14
16	2	EYELET FEED THROUGH	9006781	13
4		NUT KEPS #4-40	9006557	12
8	11,12,13,14,15,16,17,18	LAMP	1209169	11
4		LOCK WASHER INTERNAL 6-32	9006633	10
4		SCREW PHL PAN HEAD 6-32 x 5/16 LG	9006021-1	9
2		SWITCH MOUNTING BAR	B-MD-5409820-0-0	8
1	S3	SWITCH, ROCKER	1205375	7
1	S2	SWITCH, ROCKER	1205941	6
1	J3	HOUSING, SOCKET MATE-N-LOCK 15 PIN	1209350-15	5
1	J2	HOUSING, SOCKET MATE-N-LOCK 4 PIN	1209350-04	4
				3
1		CONNECTOR BRACKET	C-MD-5409829-0-0	2
1		ETCHED CIRCUIT BOARD	9009697	1
REF		MODULE ECO HISTORY	B-HH-5409698-0-0	
REF		X-Y CO-ORDINATE HOLE LOCATION	X-CO-5409698-0-4	
REF		CIRCUIT SCHEMATIC	C-CS-5409698-0-1	
QTY.	REF DESIGNATION	DESCRIPTION	PART NO.	

PARTS LIST

IC TYPE	GND	+5V
GND AND 5V ARE USUALLY PIN 7 AND 14 RESPECTIVELY. EXCEPTIONS ARE STATED ABOVE		

IC PIN LOCATIONS

ITEM NO	AWG	FROM PT	TO PT

JUMPER LIST

DEC NO.	EIA NO.	DEC NO.	EIA NO.

SEMICONDUCTOR CONVERSION CHART

FIRST USED ON OPT/MOD RKØ5

ETCH BOARD REV D

D. JENSEN	8-22-72	D
5409698-00002	8-14-72	C
D. JENSEN	7-11-72	B
SCORED 00001		

EQUIPENY CORPORATION

TITLE RK7-2 CONTROL PANEL (RKØ5)

FIRST RIGHT PR ASSY D-UA-RK5-0-0

E | A | 5409698-0-0 | E

5409698-0-0

This drawing and specifications, herein, are the property of Digital Equipment Corporation and shall not be reproduced or copied or used in whole or in part as the basis for any manufacture or sale of items without written permission.

NOTE:

1. RELAY CONTACTS ARE SHOWN IN THE DE-ENERGIZED POSITIONS.
2. SAFETY RELAY L AND BLOWER MTR RELAY DR ARE THE SAME SIGNAL.
3. SPINDLE MOTOR RELAY L AND DISK RELAY DR ARE THE SAME SIGNAL.
4. THIS MODULE MUST BE UL APPROVED

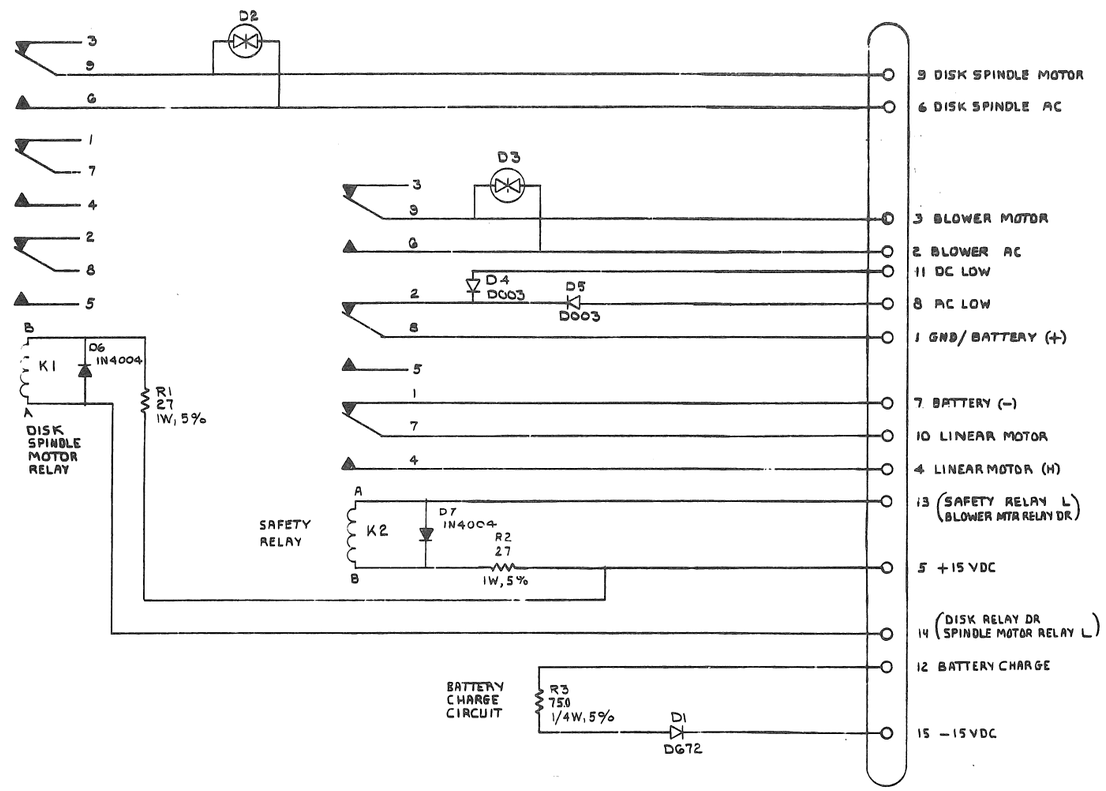

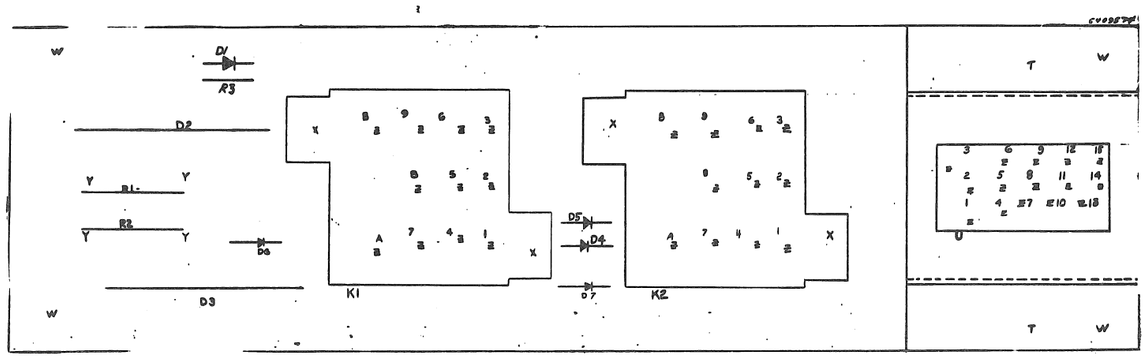

QTY	REF DESIGNATION	DESCRIPTION	PART NO.	ITEM NO.
		PARTS LIST		
ETCH BOARD REV	F			

DEC NO.	EIA NO.	DEC NO.	EIA NO.
D003	IN994		
D672	IN3653		

SEMICONDUCTOR CONVERSION CHART

REV	CHANGE NO.	CHK.
E	5409574-00001	D. JENSEN
F	5409574-00002	
H	5409574-00003	N. FIELD

DRN. ROGER J DOUCETTE DATE 12-9-71
CHK'D. DATE 12-5-71
ENG. DATE 10 Jan 72
PROJ. ENG. DATE 10 Jan 72
PROD. DATE
NEXT HIGHER ASSY
SCALE
SHEET 1 OF 1

[redacted] EQUIPMENT CORPORATION
MAYNARD, MASSACHUSETTS

TITLE DEC PACK MOTOR RELAYS

SIZE D CODE CS NUMBER 5409574-0-1 REV. H

DIST.

DEC FORM NO. DEC-135

This drawing and specifications, herein, are the property of Digital Equipment Corporation and shall not be reproduced or copied or used in whole or in part as the basis for the manufacture or sale of items without written permission.

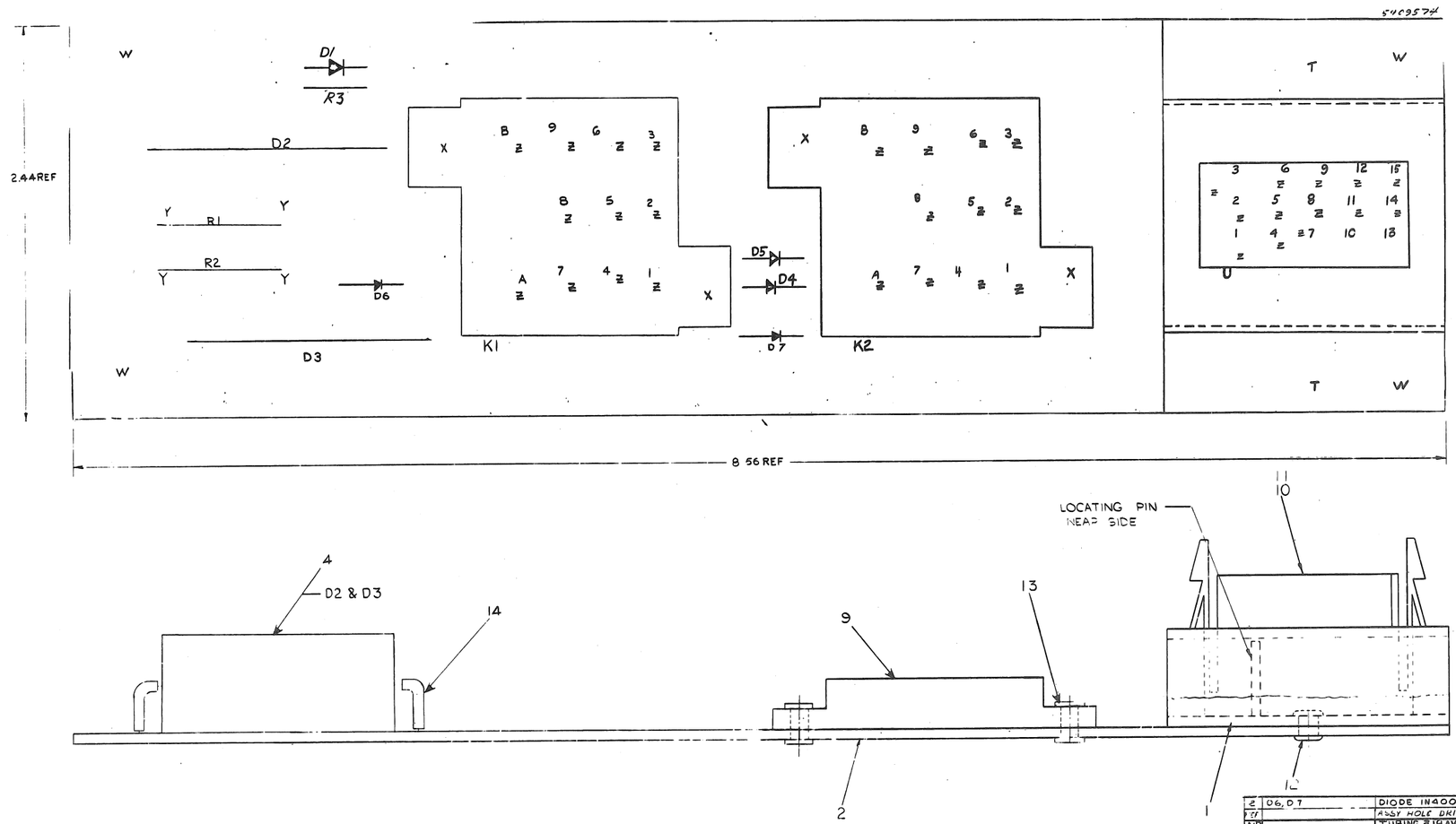

QTY.	REF DESIGNATION	DESCRIPTION	PART NO.	ITEM NO.
2	D6, D7	DIODE IN4004	1105796	18
REF		ASSY HOLE DRILLING LAYOUT	VAN 54095 14-0-3	17
AR		TUBING #18AWG TEFLON THN	9107278-11	16
4		EYELET 65-4-9	5006746	15
2		EYELET .121 ODx.219 LG	9006752	12
15		PINS FOR MATE-N-LOCK	12094556-01	11
1		15 PIN MATE-N-LOCK	1209350-15	10
2		RELAY SOCKET	1210684	9
2	K1 K2	RELAY GP 3R23IAD1000	1210683	8
2	R1 R2	RESISTOR 27 1W 5%	1501516	7
1	R3	RESISTOR 750 1/4W 5%	1501401	6
1	D1	DIODE D6.7Z	1105275	5
2	D2, D3	ARC SUPPRES. GRS705 P4B4	1100106	4
2	D4, D5	DIODE GER D003	1100100	3
1		ETCHED CIRCUIT BOARD	5009573	2
REF		MODULE ECO HISTORY	8-MH-54095740-0	
1		BRACKET MOTOR RELAY	SMD 5409811-0-0	1
REF		X-Y COORD HOLE LOCAT.	KCO-54095740-0	
REF		CIRCUIT SCHEMATIC	D-CS-54095740	

PARTS LIST

ETCH BOARD REV F

CAUTION
CHANGE COULD AFFECT U.L. LISTING

FIRST USED ON: RK05

DEC NO.	EIA NO.	DEC NO.	EIA NO.
D-672	IN3653		
D-003	IN994		

SEMICONDUCTOR CONVERSION CHART

IC TYPE	GND	+5V
GND AND 5V ARE USUALLY PIN 7 AND 14 RESPECTFULLY EXCEPTIONS ARE STATED ABOVE		

IC PIN LOCATIONS

ITEM NO	AWG	FROM PT	TO PT

JUMPER LIST

1	Initial release	10-27-71
2	Revised per ECO 54095-100002	11-23-71
3	Revised per ECO 54095-100003	12-17-71
4	Revised per ECO 54095-100004	1-13-72
5	Revised per ECO 54095-100005	3-16-72
6	Revised per ECO 54095-100006	11-13-73

FINAL USE: RK05 54095-100003 H
NORM FIELD
Rev 1 Lester 3-27-72
Add Rev 2 11-13-73
J. Jensen 3/16/73
ECO 54095740000 E

DRAWN: J. Lebo 11/71
DESIGNED: J. Lebo 11/71
CHECKED: J. Lebo 11/71
ENGINEERING: J. Lebo 11/71
MANUFACTURING: J. Lebo 11/71
QUALITY ASSURANCE: J. Lebo 11/71
MATERIALS: J. Lebo 11/71
D-UA-RK05-0-0
SCALE 4:1
SHEET 1 OF 1

DIGITAL EQUIPMENT CORPORATION
MAYNARD, MASSACHUSETTS

TITLE: DECPACK MOTOR RELAYS

DRAWING NO. E UA 5409574-0-0 REV. H
DIST.

E UA 5409574 0 0

This drawing and specifications, herein, are the property of Digital Equipment Corporation and shall not be reproduced or copied or used in whole or in part as the basis for the manufacture or sale of items without written permission.

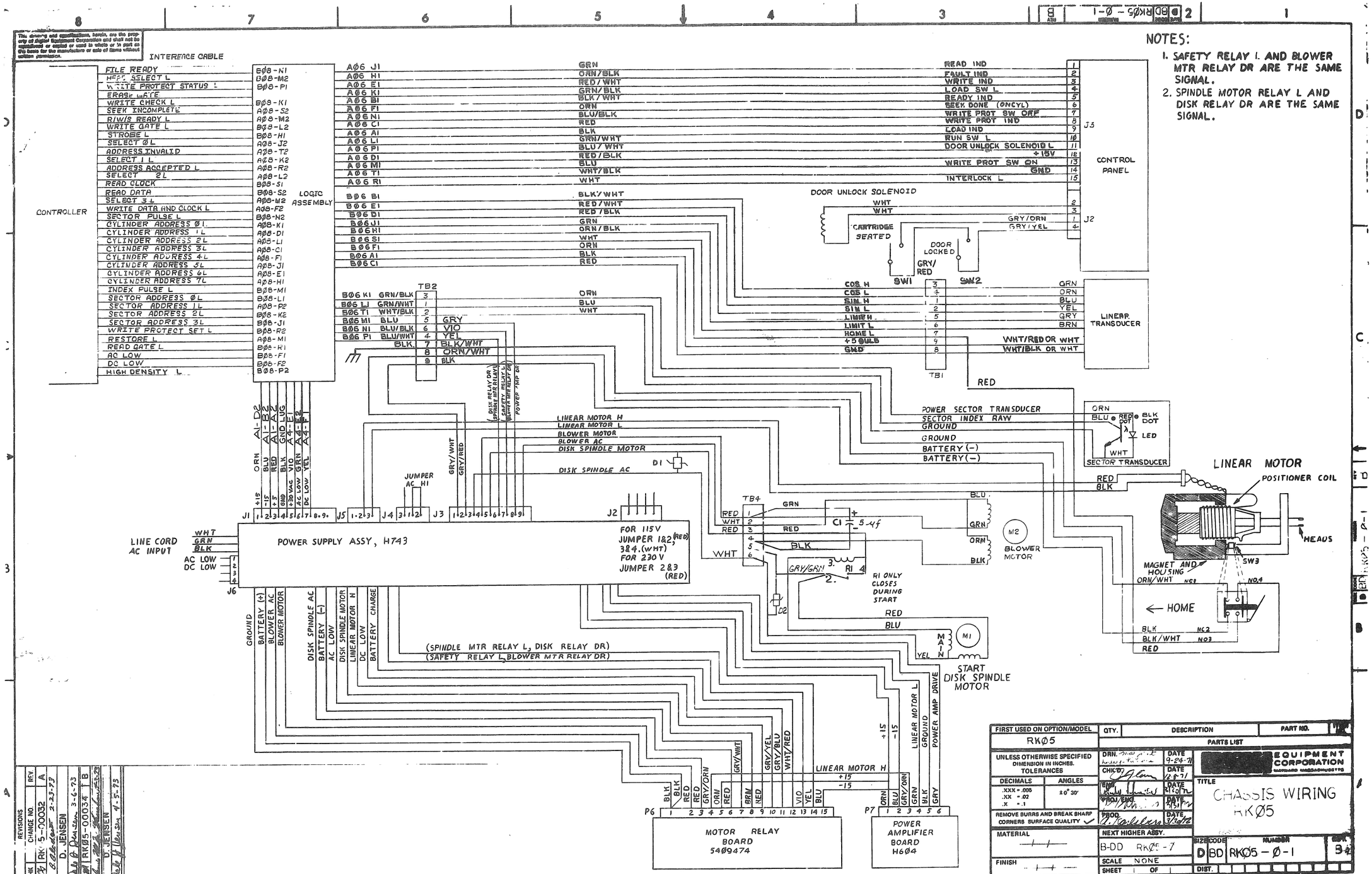

NOTES:

1. SAFETY RELAY L AND BLOWER MTR RELAY DR ARE THE SAME SIGNAL.
2. SPINDLE MOTOR RELAY L AND DISK RELAY DR ARE THE SAME SIGNAL.

FIRST USED ON OPTION/MODEL	QTY.	DESCRIPTION	PART NO.
RKØ5		PARTS LIST	

UNLESS OTHERWISE SPECIFIED DIMENSION IN INCHES. TOLERANCES

DECIMALS	ANGLES
.XXX = .005	±0° 30'
.XX = .02	
.X = .1	

REMOVE BURRS AND BREAK SHARP CORNERS SURFACE QUALITY ✓

MATERIAL

FINISH

		DATE
DRN.		9-24-71
CHK'D		12-2-71
ENGR.		12-20-71
MFG/ENGR.		5/5/72
PROD.		5/10/72

NEXT HIGHER ASSY. B-DD RKØ5-7

SCALE NONE

SHEET OF

EQUIPMENT CORPORATION

TITLE CHASSIS WIRING RKØ5

SIZE D CODE BD NUMBER RKØ5-Ø-1 REV. B4

DIST.

REVISIONS				
CHK	CHANGE NO.			REV.
	RK 5-00032		2-23-73	A
	D. JENSEN		3-6-73	
	RKØ5-00034			B
	D. JENSEN		4-5-73	

DEC FORM NO ORD 102-B

DIGITAL EQUIPMENT CORPORATION
MAYNARD, MASSACHUSETTS

ACCESSORY LIST

MADE BY G. Schneider DATE	CHECKED DATE 8/17/72	SECTION
ENG DATE 8/17/72	PROD DATE 8/17/72	ISSUED SECT.

LEGEND
- D DOCUMENT
- DN DOCUMENT CHANGE NOTICE
- PA PAPER TAPE ASCII
- PB PAPER TAPE BINARY
- PM PAPER TAPE READ-IN-MODE

ITEM NO.	DWG NO./PART NO.	DESCRIPTION	QUANTITY/VARIATION: All RK11's	All RK8E's						KIT CHECK BY ____ DATE ____	INSTALLATION CHECK BY ____ DATE ____
1	RK05-0	Customer Print Set (B-DD-RK05-0 Sheet one only)	1	1							
~~2~~	~~DEC-RKØ5-TPB-1~~	~~ILLUSTRATED PARTS BREAK DOWN FOR RKØ5~~	~~1~~	~~1~~							
3	DEC-00-RKØ5JF-DA	Maintenance Manual	1	1							
*** 4	BC 11A-Ø8	Unibus Cable 8 feet	1	1							
5	2200007	Head Cleaning Kit	1	1							
6	3010350-00	Disk Cartridge 12 Sector	1	0							
7	3010350-02	Disk Cartridge 16 Sector	0	1							
8*	A-AD-7009276-0-0	Mounting Hardware KIT	1	1							
9*	1209152-0-2 REF	Slide Chassis (Use set that was issued to Assy Line)	1	1							
	NOTE: The following items are additionally required when unit is shipped in a rack.										
10	749691-1	Shipping Bracket (Left Hand)	1	1							
11	749691-2	Shipping Bracket (Right Hand)	1	1							
12**	3611382	Drive Identification Numbers	1	1							
	*NOTE: If unit is shipped in a rack, Items 8 and 9 are mounted to the rack.										
	**NOTE: Attach the drive identification number set to the instruction sheet #DEC-16-(379)-1094-N573 using transparent adhesive tape. Insert sheet behind front cover of maintenance manual										
	*** NOTE: MAXIMUM TOTAL UNIBUS CABLE LENGTH = 5Ø FEET										

TITLE	ASSY. NO.	SIZE	CODE	NUMBER	REV.	ECO NO
DECpack Assembly	SHEET 1 OF 1	A	AL	RK05-0-17	F	KKØ5J 00006

DIST.

DEC 16-(325)-1075-N172 DRA 121

digital EQUIPMENT CORPORATION
MAYNARD MASSACHUSETTS

DRAWING DIRECTORY

CUSTOMER PRINT SET INDEX

THIS IS PRINT SET

	SEQUENCE	SEQUENCE
DRAWING DIRECTORY	B-DD-H743-Ø	SHEET #1 ONLY
CIRCUIT SCHEMATIC	D-CS-H743-Ø-1	
±5V REGULATOR	E-IA-5409503-0-0	
CIRCUIT SCHEMATIC	D-CS-5409503-0-1	
±15V REGULATOR	E-IA-5409484-0-0	
CIRCUIT SCHEMATIC	D-CS-5409484-0-1	

MFG PRINTS

POWER SUPPLY	[illegible]-UA-H743-0-0
POWER SUPPLY (PL)	A-PL-H743-0-0
DRAWING DIRECTORY	B-DD-H743-Ø
PACKAGING INSTRUCTION	A-PI-3700130-0-0

UNIT VARIATIONS

VARIATION	TITLE	PRINT SET TYPE
H743-AA	POWER SUPPLY 115V	X
H743-AB	POWER SUPPLY 230V	X

REVISIONS

DATE	CHG. NO.	REV
[illegible]	[illegible]	A
[illegible]/72	H743-1	B
[illegible]	H743-2	C
[illegible]	H743-3	D
[illegible]	H743-4	E
[illegible]	H743-5	F
[illegible]	[illegible]	H
[illegible]74	H743-7	J
[illegible]	[illegible]	
[illegible]	[illegible]	L
[illegible]	[illegible]	M
[illegible]	[illegible]	K

USED ON OPTION/MODEL

DRN.	DATE [illegible]	TITLE [illegible] SUPPLY (H743)
CHK'D.	DATE [illegible] 7-72	
PROJ ENG	DATE	
PROD	DATE	SIZE B · CODE DD · NUMBER H743-Ø · REV
FIELD SERV	DATE	
SHEET 1 OF		DIST

DRB 106

DEC 16-(325) 1062-1-N871

This drawing and specifications, herein, are the property of Digital Equipment Corporation and shall not be reproduced or copied or used in whole or in part as the basis for the manufacture or sale of items without written permission.

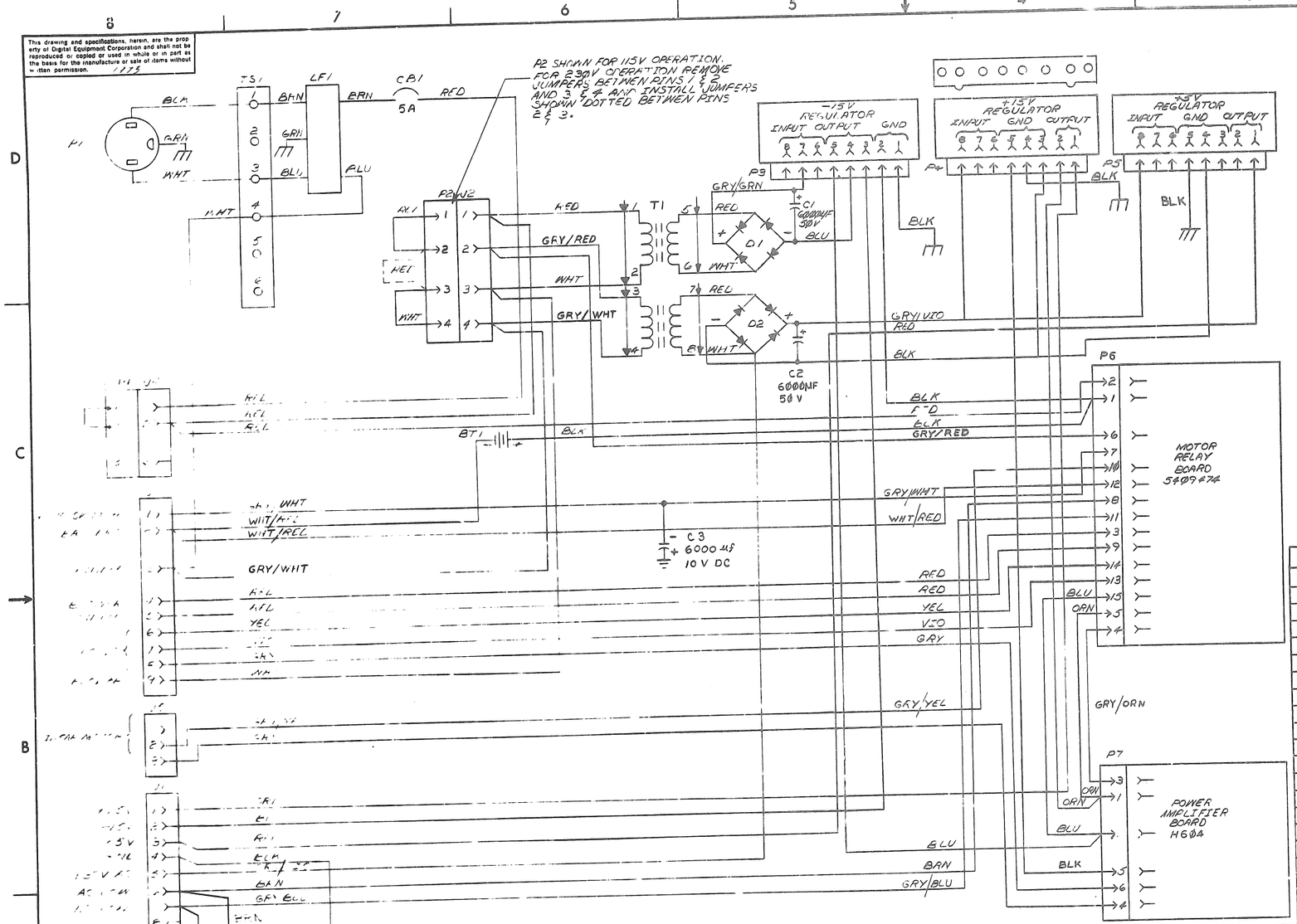

QTY	REF DESIGNATION	DESCRIPTION	PART NO.	ITEM NO.
1	P1	POWER CORD 230V	1700016-09	22
1	C3	CAP 6000 µF 10 VDC	1010704	21
1	P4	JUMPER AC HI	B-1A-7008729-3-0	20
1	P2	JUMPER 230V	B-1A-7008729-2-0	19
1	P2	JUMPER 115V	B-1A-7008729-1-0	18
3	P3, P4, P6	CONN, MATE-N-LOCK, 8PIN	1209340-01	17
1	TS1	TERMINAL STRIP (6POS)	9006906	16
1	T1	TRANSFORMER	1610511	15
~~1~~	~~BT1~~	~~ELAPSED TIME INDICATOR, 70000 HRS~~	~~1210761~~	~~14~~
1	P7	CONN, MATE-N-LOCK, 6 PIN	1209351-06	13
1	P6	CONN, MATE-N-LOCK, 15 PIN	1209351-15	12
1		+5V REGULATOR	E-1A-5409503-0-0	11
2		± 15V REGULATOR	E-1A-5409484-00	10
1	BT1	BATTERY	1210641	9
1	P1	POWER CORD 115V	1700006-09	8
2	J4, J5	CONN, MATE-N-LOCK, 3PIN	1209350-03	7
2	J2, J6	CONN, MATE-N-LOCK, 4PIN	1209350-04	6
2	J1, J3	CONN, MATE-N-LOCK, 9PIN	1209350-09	5
1	LF1	LINE FILTER	1212877-01	4
2	C1, C2	CAP 6000 µF, 50V	1010510	3
2	D1, D2	RECTIFIER (MDA990-3)	1110051	2
1	CB1	CIRCUIT BREAKER 5A	1205203	1

PARTS LIST

FIRST USED ON OPTION/MODEL: H743

ETCH BOARD REV

REV	CHANGE NO.	CHK
A	RK3F-00019	
B	H743-00001	
C	H743-00002	
D	H743-00004	
E	H743-00006	
F	H743-00016	

REVISIONS

DEC NO. | EIA NO. | DEC NO. | EIA NO.

SEMICONDUCTOR CONVERSION CHART

DRN. M. Ca... DATE 10/12/72
CHK'D. J. Fi... DATE 11-5-71
ENG. ... DATE 24 Dec. 71
PROJ. ENG. E. Simmons DATE 11-30-71
PROD. J. Kalberg DATE 3/20/72

NEXT HIGHER ASSY B-DD-H743-0

SCALE NONE

SHEET 1 OF 1

digital EQUIPMENT CORPORATION MAYNARD, MASSACHUSETTS

TITLE CIRCUIT SCHEMATIC H743

SIZE D CODE CS NUMBER H743-0-1 REV. 6

DIST.

DFC FORM NO 11013-135

The drawing and specifications, herein, are the property of Digital Equipment Corporation and shall not be reproduced or copied or used in whole or in part as the basis for the manufacture or sale of items without written permission. 1975

WIRE TABLE

ITEM NO.	DESCRIPTION AWG	COLOR	LENGTH IN.± 1/8	STRIP LENGTH-X	STRIP LENGTH-Y	CONNECTIONS FROM	TO
42	—	BLK	2 1/8	—	1/2"	L1	D2 CATHODE LUG
42	—	BLK	2 1/8	—	1/2"	L1	R21-T2
68	18	VIO	2 1/4	1/2"	1/2"	Q5-C	D3 CATHODE LUG
66		GRN	4 1/4	1/2"	1/2"	D2 ANODE	D3 ANODE LUG
65		YEL	4 1/8	1/2"	1/2"	D3 CATHODE	R21-T1
70		WHT	4 3/8	1/2"	1/2"	SPLIT LUG #1	Q5-E
69		GRY	5 1/4	1/2"	1/2"	SPLIT LUG #2	Q5-B
68		VIO	5 1/4	1/2"	1/2"	SPLIT LUG #3	Q5-C
67		BLU	8	1/2"	1/2"	SPLIT LUG #4	R21-T2
66		GRN	5 3/4	1/2"	1/2"	SPLIT LUG #6	D3 ANODE LUG
65	18	YEL	8 1/4	1/2"	1/2"	SPLIT LUG #5	R21-T1

SEE NOTE #5

EXTERNAL COMPONENTS

ITEM NO.	LENGHT	DESCRIPTION	POL	CONNECTIONS FROM	TO	POL
45	NOTE #2	RES.100 Ω W5%		Q5-E	Q5-B	
46	NOTE #3	CAP 10UF 50V10%	+	Q5-E	D3 ANODE LUG	−

NOTES:

1. R13 IS USED FOR OUTPUT VOLTAGE ADJUSTMENT. R7 IS USED FOR OUTPUT CURRENT ADJUSTMENT.
2. CUT LEADS OF RES. (R22) SO THERE IS 3/8" OF A LEAD LEFT ON BOTH ENDS.
3. CUT LEADS OF CAP. (C11) SO THERE IS 1/2" OF A LEAD LEFT ON BOTH ENDS.
4. THERMAL COMPOUND (ITEM 31) IS TO BE APPLIED TO BOTH SIDES OF ALL THERMAL INSULATORS (ITEM 49,50 & 63). BOTH SIDES OF EACH INSULATOR SHOULD BE COVERED, LEAVING NO VOIDS WHEN INSTALLED. CARE MUST BE EXERCISED SO THAT NO EXTRA COMPOUND INTERFERES WITH ANY ELECTRICAL CONNECTION MADE TO ANY DIVICE.
5. WHEN ASSEMBLING THE WIRES FROM THE CIRCUIT BOARD TO THE HEAT SINK, PLACE THE MODULE AGAINST THE HEAT SINK, WIRE AS SHOWN BY THE WIRE LIST AND MAKE A SERVICE LOOP AT THE CONNECTIONS ON THE HEAT SINK TO TAKE UP ANY EXCESS WIRE THAT MIGHT BE AVAILABLE.

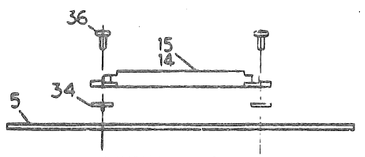

VIEW A-A
SCALE: NONE

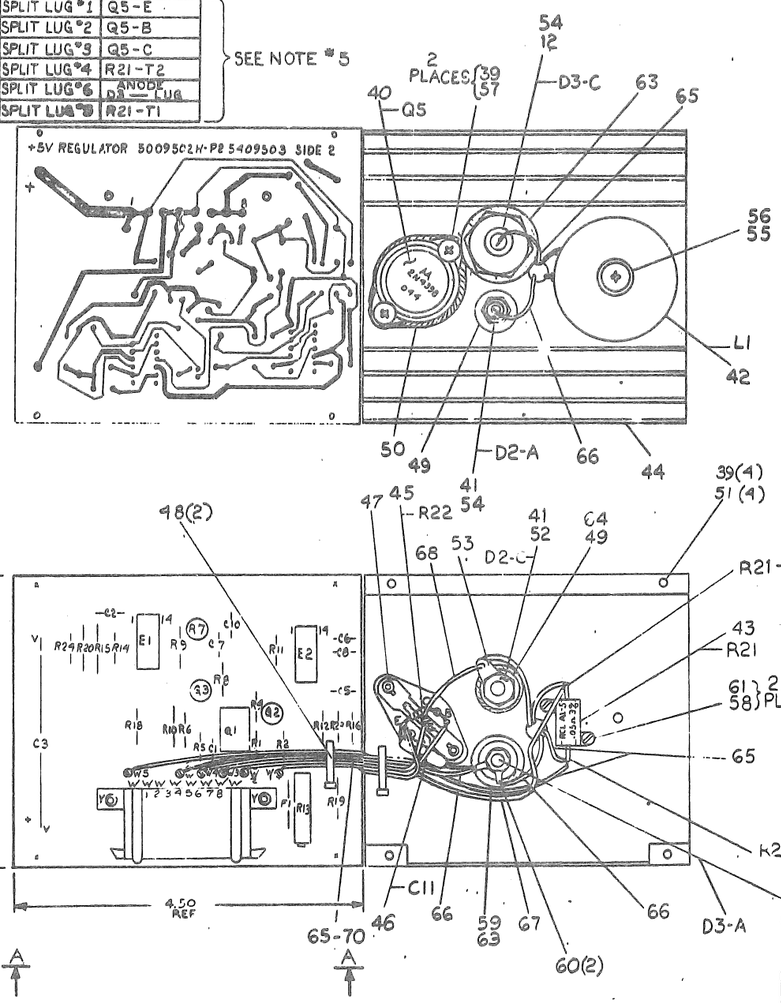

IC TYPE	GND	+5V

GND AND 5V ARE USUALLY PIN 7 AND 14 RESPECTIVELY EXCEPTIONS ARE STATED ABOVE

IC PIN LOCATIONS

DEC NO.	EIA NO.	DEC NO.	EIA NO.
		1N3889	SAME
		2N1398	—
		D45C6	—
		2N4441	—
		DEC 6534 D	MPS 6534
		1N752 A	SAME

SEMICONDUCTOR CONVERSION CHART

REV	CHANGE NO.	REVISIONS
R	5409503-0003	REVISED & REDRAWN

J. RINALDI

FIRST USED ON OPTION MODEL — / —

QTY	REF DESIGNATION	DESCRIPTION	PART NO.	ITEM NO.

PARTS LIST

ETCH BOARD REV H

DRN.	C MARINI	DATE 8-21-71
CHK'D.	J FLEMING	DATE 8-27-71
ENG.	P. VENDSON	DATE 9-8-71
PROJ. ENG.	P. VENDSON	DATE 9-8-71
PROD.	P FAZIO	DATE 9-9-71

NEXT HIGHER ASSY — / —

SCALE NONE
SHEET 1 OF 1

EQUIPMENT CORPORATION
MAYNARD MASSACHUSETTS

TITLE
+ 5 VOLT
POWER REGULATOR

SIZE D CODE IA NUMBER 5409503-0-0 REV. R
SHT.

D IA 5409503-0-0 R

THIS SCHEMATIC IS FURNISHED ONLY FOR TEST AND MAINTENANCE PURPOSES. THE CIRCUITS ARE PROPRIETARY IN NATURE AND SHOULD BE TREATED ACCORDINGLY
COPYRIGHT 1971 BY DIGITAL EQUIPMENT CORPORATION

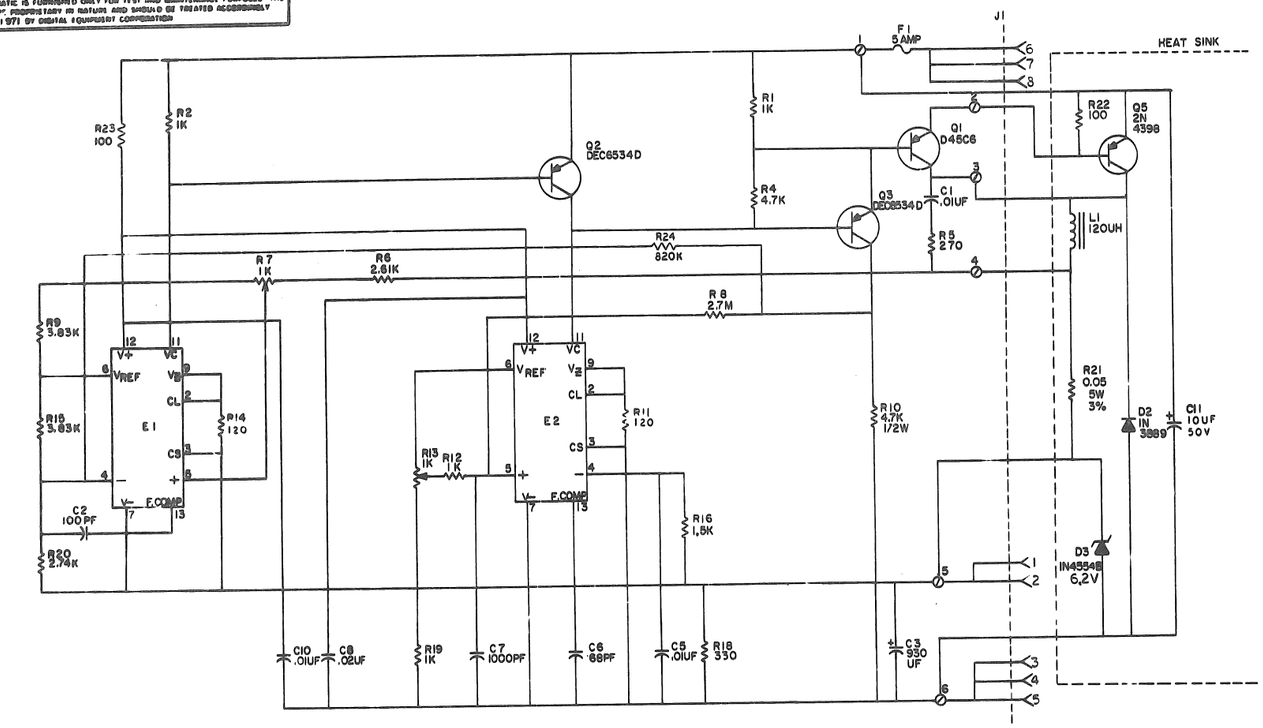

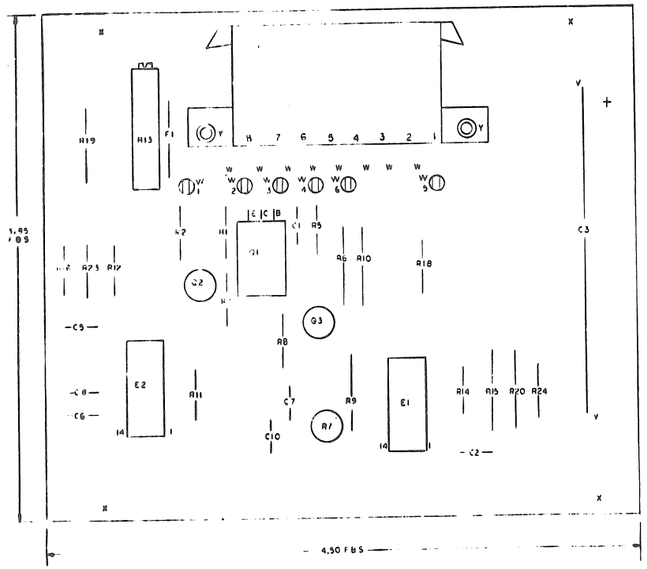

QTY	REF DESIGNATION	DESCRIPTION	PART NO.	ITEM NO.
A/R		WIRE #18 AWG STRD (WHT.)	9107360-99	70
A/R		WIRE #18 AWG STRD (GRY.)	9107360-88	69
A/R		WIRE #18 AWG STRD (VIO.)	9107360-77	68
A/R		WIRE #18 AWG STRD (BLU.)	9107360-66	67
A/R		WIRE #18 AWG STRD (GRN.)	9107360-55	66
A/R		WIRE #18 AWG STRD (YEL.)	9107360-44	65
1		3/16 FLAT WASHER	9006666	64
2		THERMAL INSULATOR	9009678	63
1		NUT, HEX 1/4 X 28	9008063	62
2		WASHER, INT TOOTH LOCK #2	9006631	61
2		SOLDER LUG	9006764	60
1		1/4 FLAT WASHER	9006676	59
2		SCR BINDING HD 2-56 X 3/16 SST	9006000-4	58
2		SCR PHIL PAN HD 6-32 X 5/8 SST	9006025-1	57
1		SCR PHIL TRUSS HD 10-32 X 1 SST	9006077-3	56
1		WASHER INT TOOTH LOCK #10	9006635	55
2		BUSHING	9008441	54
1		SOLDER LUG	9008150	53
1		NUT, HEX #10-32	9006564	52
4		SCR PHL PAN HD #6-20 X 3/8 ST	9008407	51
1		THERMAL INSULATOR	9008419	50
2		THERMAL INSULATOR	9008424	49
2		TIE WRAPS	9007031	48
1		TRANSISTOR SOCKET	1210130	47
1	C11	CAP 10UF 50V	1000070	46
2	R22, R23	RES 100 1/4W 5%	1300229	45
1		HEAT SINK	D-IA-5309543-0-0	44
1	R21	RES 0.05 5W 3%	1310507	43
1	L1	CHOKE 120 UH	1610573	42
1	D2	DIODE IN3889	1110491	41
1	Q5	TRANSISTOR 2N4398	1505870	40
6		WASHER INT TOOTH #6	9006633	39
2	R11, R14	RES 120 1/4W 5%	1300247	38
1	R16	RES 1.5K 1/4W 5%	1300391	37
2		EYELETS	9006732	36
6		SPLIT LUGS	9006735	35
2		WASHER NYLON	9006707	34
2	E1, E2	IC 723C DIP REGULATOR	1910415	33
1	Q1	TRANSISTOR D45C6 C-E.	1510414	32
A/R		THERMAL COMPOUND	9008268	31
2	Q2, Q3	TRANSISTOR DEC6534D	1503409-00	30
1	R8	RES 2.7M 1/4W 5%	1309680	29
2	R9, R15	RES 3.83K 1/8W 1%	1309413	28
1	R7	RES 1K 1/2W 20%	1309150-3	27
1	R13	RES 1K 10W 76PR	1309143-07	26
1	R20	RES 2.74K 1/8W 1% MF	1304868	25
1	R6	RES 2.61K 1/8W 1% MF	1303303	24
1	R19	RES 1K 1/8W 1% MF	1303114	23
				22
1	R10	RES 4.7K 1/2W 5%	1300445	21
1	R5	RES 270 1/4W 5%	1301972	20
1	R4	RES 4.7K 1/4W 5%	1300447	19
3	R1, R2, R12	RES 1K 1/4W 5%	1300365	18
1	R18	RES 330 1/4W 5%	1300295	17
1	R24	RES 820K 1/4W 10%	1303187	16
8		CONNECTOR PIN	1209456	15
1	J1	CONN. 8 PIN AMP.	1209340-00	14
1	F1	FUSE 5 AMPS	1209070	13
1	D3	DIODE IN4554B 6.2V	1112122	12
1	C8	CAP .02UF 100V -0+20% DISC	1000004	11
1	C3	CAP 930UF 30V -10+75% ELEC.	1010509	10
3	C1, C5, C10	CAP .01UF 100V 20% DISC	1001610	9
1	C7	CAP 1000PF 100V 5% MICA	1000042	8
1	C2	CAP 100PF 100V 5% DM	1000016	7
1	C6	CAP 68PF 100V 5% DM	1000014	6
1		ETCH CIRCUIT BOARD	5009502	5
		MODULE ECO HISTORY	B-MH-5409503-0-6	4
		ASSY/DRILLING HOLE LAYOUT	D-AH-54095030-5	3
		X-Y COORDINATE HOLE LOCATION	K-CO 54095030-4	2
		+5V REGULATOR	D-IA-5409503-0-0	1

PARTS LIST

TRANSISTOR & DIODE CONVERSION CHART

DEC	EIA	DEC	EIA
[illegible]	[illegible]	[illegible]	[illegible]
[illegible]	[illegible]	[illegible]	[illegible]
[illegible]	[illegible]	[illegible]	[illegible]
[illegible]	[illegible]	[illegible]	[illegible]

DIGITAL EQUIPMENT CORPORATION

TITLE: +5 VOLT REGULATOR

SIZE D | CODE CS | NUMBER 5409503-0-1 | REV R

PRINTED CIRCUIT REV. H

D CS 5409503-0-1 R

This drawing and specifications, herein, are the property of Digital Equipment Corporation and shall not be reproduced or copied or used in whole or in part as the basis for the manufacture or sale of items without written permission. 1973

WIRE TABLE

ITEM NO.	DESCRIPTION AWG	DESCRIPTION COLOR	LENGTH INCHES +-1/8	STRIP LENGTH X	STRIP LENGTH Y	CONNECTIONS FROM	CONNECTIONS TO
43	—	BLK	2 1/8	—	1/2	L1	D3-A (CATHODE)
43	—	BLK	2 1/8	—	1/2	L1	TS-2
65	18	BLU	2 1/4	1/2	1/2	Q4-C	D3-C (CATHODE)
67	18	GRY	3 5/8	1/2	1/2	Q4-E	R24-T2
64	18	GRN	4 1/2	1/2	1/2	D3-ANODE	TS-1
68	18	WHT	5 7/8	1/2	1/2	SPLIT LUG #1	R24-T1
67	18	GRY	4 7/8	1/2	1/2	#2	Q4-E
66	18	VIO	5 1/8	1/2	1/2	#3	Q4-B
65	18	BLU	5 1/8	1/2	1/2	#4	Q4-C
64	18	GRN	5 1/2	1/2	1/2	#6	TS-1
63	18	YEL	6 7/8	1/2	1/2	SPLIT LUG #5	TS-2

SEE NOTE 5

EXTERNAL COMPONENTS

ITEM NO.	LENGTH	DESCRIPTION	POL	CONNECTIONS FROM	CONNECTIONS TO	POL
45	SEE NOTE 2	RES 100Ω 1/4W 5%		Q4-E	Q4-B	
47	SEE NOTE 3	CAP 10UF 50V 10%	+	Q4-E	TS-1	—

NOTES:

1. R17 IS USED FOR OUTPUT VOLTAGE ADJUSTMENT. R2 IS USED FOR OUTPUT POWER ADJUSTMENT.
2. CUT LEADS OF RES. (R25) SO THERE IS 3/8" OF A LEAD LEFT AT BOTH ENDS. (3/8, R25)
3. CUT LEADS OF CAP. (C9) SO THERE IS 1/2 OF A LEAD LEFT AT BOTH ENDS. (1/2, C9)
4. THERMAL COMPOUND (ITEM #39) IS TO BE APPLIED TO BOTH SIDES OF ALL THERMAL INSULATORS (ITEM #50+51) BOTH SIDES OF EACH INSULATOR SHOULD BE COMPLETELY COVERED, LEAVING NO VOIDS WHEN INSTALLED. CARE MUST BE EXERCISED SO THAT NO EXTRA COMPOUND INTERFERES WITH ANY ELECTRICAL CONNECTION MADE TO ANY DEVICE.
5. WHEN ASSEMBLING THE WIRES FROM THE CIRCUIT BOARD TO THE HEAT SINK, PLACE THE MODULE AGAINST THE HEAT SINK. WIRE AS SHOWN BY THE WIRE LIST AND MAKE A SERVICE LOOP AT THE CONNECTIONS ON THE HEAT SINK TO TAKE UP ANY EXCESS WIRE THAT MIGHT BE AVAILABLE.

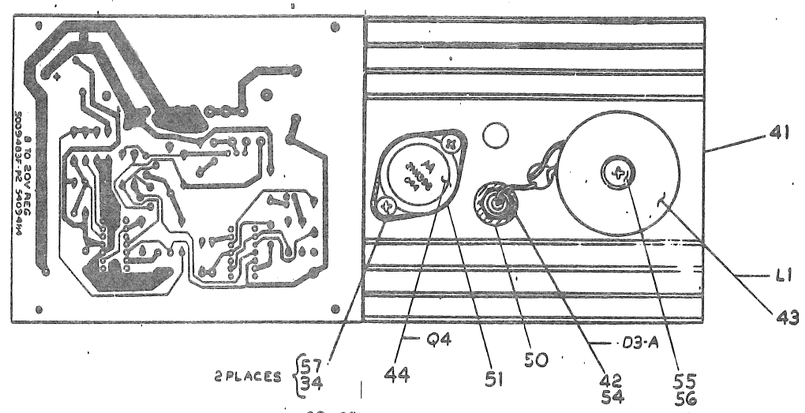

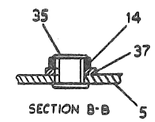

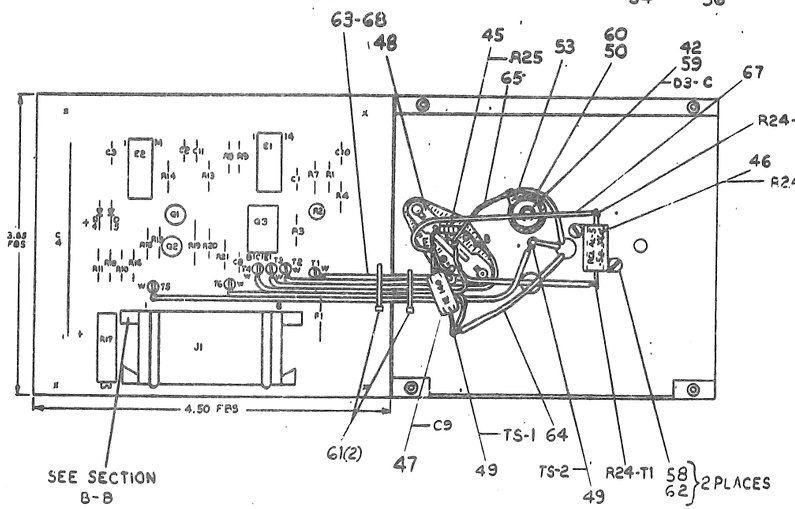

QTY	REF DESIGNATION	DESCRIPTION	PART NO.	ITEM NO.

PARTS LIST

ETCH BOARD REV

DEC NO.	EIA NO.	DEC NO.	EIA NO.

SEMICONDUCTOR CONVERSION CHART

REV	CHANGE NO.	REVISIONS
K	5409484-00007	REVISED REDRAWN

J. RINALDIS

DRN. T. QUILLIN DATE 7 SEP 71
CHK'D. J. FLEMING DATE 8 SEP 71
ENG. P. SVENDSEN DATE 8 SEP 71
PROJ. ENG. P. SVENDSEN DATE 8 SEP 71
PROD. P. FAZI DATE 9 OCT 71
NEXT HIGHER ASSY D-UA-H737-0-0
SCALE NONE
SHEET 1 OF 1

DIGITAL EQUIPMENT CORPORATION MAYNARD, MASSACHUSETTS

TITLE 8 TO 20V REGULATOR

SIZE D CODE IA NUMBER 5409484-0-0 REV. K

DIST.

DEC FORM NO DRD-130

"THIS DRAWING AND SPECIFICATIONS, HEREIN, ARE THE PROPERTY OF DIGITAL EQUIPMENT CORPORATION AND SHALL NOT BE REPRODUCED OR COPIED OR USED IN WHOLE OR IN PART AS THE BASIS FOR THE MANUFACTURE OR SALE OF ITEMS WITHOUT WRITTEN PERMISSION.
COPYRIGHT © DIGITAL EQUIPMENT CORPORATION"

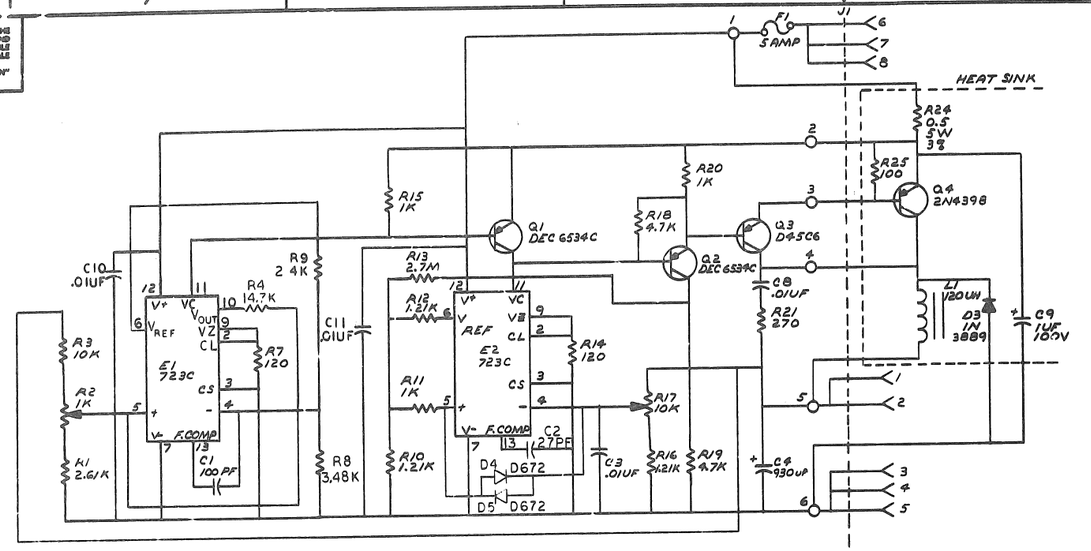

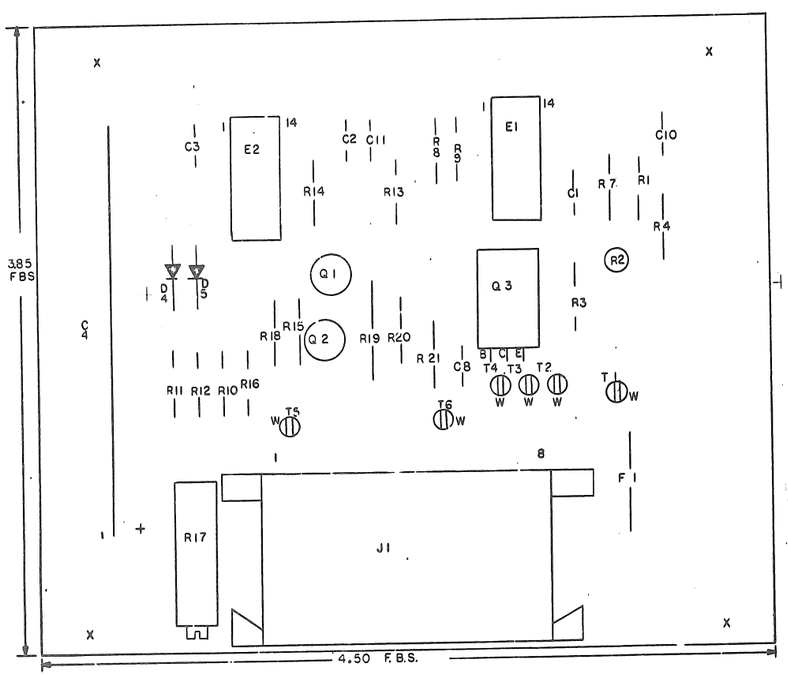

QTY	REF DESIGNATION	DESCRIPTION	PART NO.	
4		WASHER, LOCK SPRING	9007801	69
A/R		WIRE #18 AWG STRD (WHT)	9107360-99	68
A/R		WIRE #18 AWG STRD (GRY)	9107360-88	67
A/R		WIRE #18 AWG STRD (VIO)	9107360-77	66
A/R		WIRE #18 AWG STRD (BLU)	9107360-66	65
A/R		WIRE #18 AWG STRD (GRN)	9107360-55	64
A/R		WIRE #18 AWG STRD (YEL)	9107360-44	63
2		#2 INTERNAL LOCK WASHER	9006631	62
2		TIE WRAPS	9007031	61
1		WASHER FLAT 3/16	9006666	60
1		#10-32 HEX NUT	9006564	59
2		2/56 x 3/16" SCREW	9006000-4	58
2		6/32 x 5/8" PAN HD SCREW	9006023-1	57
1		10-32 x 1" TRUSS HD SCREW	9006077-3	56
1		#10 INTERNAL LOCK WASHER	9006635	55
1		BUSHING (DIODE)	9008441	54
1		SOLDER LUG	9008150	53
4		#6-20 x 3/8 SELF TAPPING SCREW	9008407-01	52
1		THERMAL INSULATOR	9008419	51
2		THERMAL INSULATOR	9008424	50
2	TS-1, TS-2	STAND OFF (STUD TYPE)	9009060	49
1		TRANSISTOR SOCKET	1210130	48
1	C9	CAP 1UF 100V	1005507	47
1	R24	RES. 0.5 3% 5W	1310508	46
1	R25	RES. 100 5% 1/4W	1300229	45
1	Q4	TRANSISTOR 2N4398	1505870	44
1	L1	120 UH CHOKE	1610573	43
1	D3	DIODE 1N3889	1110491	42
1		HEAT SINK	D-ZA-5309543-0-0	41
6		SPLIT LUGS	9006735	40
A/R		THERMAL COMPOUND	9008268	39
1	F1	FUSE 5 AMPS	1209070	38
2		WASHER NYLON	9006707	37
8		CONNECTOR PINS	1209456	36
2		EYELET	9006732	35
2		WASHER INT TOOTH #6	9006633	34
2	E1, 2	DIP REGULATOR 723C	1910415	33
1	Q3	TRANSISTOR D45C6	1510414	32
2	Q1, 2	TRANSISTOR DEC 6534C	1503409-02	31
				30
1	R21	RES. 270 1/4W 5%	1301972	29
1	R19	RES. 4.7K 1/2 W 5%	1300445	28
1	R18	RES. 4.7K 1/4W 5%	1300447	27
1	R17	RES. VARIABLE 10K 3/4 W 10%	1309143-10	26
1	R13	RES 2.7M 1/4W 5%	1309680	25
3	R11, 15, 20	RES 1K 1/4 W 5%	1300365	24
3	R10, 12, 16	RES 1.21K 1/8W 1% MF	1302871	23
1	R8	RES 3.48K 1/8W 1% MF	1305114	22
2	R7, 14	RES 120 1/4 W 5%	1300247	21
				20
1	R9	RES 2.4K 1/4W 5%	1303177	19
1	R4	RES 14.7K 1/8 W 1% MF	1302941	18
1	R3	RES 10K 1/8W 1% MF	1303912	17
1	R2	RES VARIABLE 1K 1/2 W	1309150-03	16
1	R1	RES 2.61K 1/8W 1% MF	1303303	15
1	J1	AMP 8 PIN CONNECTOR (MATE-LOC)	1209340-00	14
2	D4, D5	DIODE D672	1105275	13
				12
				11
				10
1	C4	CAP. 930UF 30V, -10+75 %	1010509	9
4	C3, 8, 10, 11	CAP. .01UF 100V 20% AXIAL	1001610	8
1	C2	CAP. 27 PF 100 V 5% MICA	1001739	7
1	C1	CAP. 100PF 100V 5% DM.	1000016	6
1		ETCHED CIRCUIT BOARD	5009483	5
		MODULE ECO HISTORY	B-MH-5409484-0-6	4
		ASSY DRILLING HOLE LAYOUT	D-AH-5409484-0-5	3
		X-Y COORDINATE HOLE LOCATION	K-CO-5409484-0-4	2
		8 TO 20 V REGULATOR	E-ZA-5409484-0-3	1

REVISIONS											
CHK	CHANGE NO.	REV.	5409484-00006	J	5409484-00007	K					
	FINAL CS		J. RINALDIS		J. RINALDIS						

DWN	L. Clotier	3-11-75
CHK'D	D. Mellen	3/12/75
ENG	M. Grell	4/3/75
PROD	M. Grell	4/3/75

TITLE 8 TO 20V REGULATOR

SIZE D CODE CS NUMBER 5409484-0-1 REV. K

SCALE SHEET 1 OF 1 DIST. F

DCS 5409484-0-1 REV. K

DRWG NO	REV LTR
K-WL-RKØ5-Ø-3	C

REVISIONS

REV LTR	ECO NO	DATE	ENG
A	RKØ5-00014	7/72	[illegible]
B	RKØ5-00031	2/73	[illegible]
C	RKØ5J-00005	4/76	[illegible]

DRAWN RE Thellen	DATE 11/8/71	digital EQUIPMENT CORPORATION MAYNARD, MASSACHUSETTS	TITLE WIRE LIST (RKØ5)
CHECKED [illegible]	DATE 11-1-71		FOR TAPE* FILE*
ENG RC Jensen	DATE 24 Nov 71		
PROJ ENG EC Simmons	DATE 11-24-71	ASSY NO D-AD-7008696-0-0	SIZE K / CODE WL / DWG. NO. RKØ5-Ø-3 / REV LTR C
PROD [illegible]	DATE 11/24/71	SCALE NONE / SHEET 1 OF 1	DIST.

RK05.C 2-Jun-76 8156 PAGE 1

PIN NAME	Y	X	Z	REMARKS	PIN NAME	A/P	PIN ORDER	NO LENGTH EXCEPTIONS FLAG	RUN NUMBER
+15VDC			1		A05D2	H	0-4/8		1
+15VDC					A06D1	H			1
+15VDC						H	0-4/8		1
+5VDC BUSA		1			B06A1	H	0-4/8		2
+5VDC BUSA					B06A2	H	0-4/8		2
+5VDC BUSB						H			2
12B		1			A01N2	H	2-5/8		3
12B					B03A1	H			3
12B						H	2-5/8		3
AC LOW			1		A04R2	H	2-7/8		4
AC LOW			2		B08F1	H	1		4
AC LOW					B07F1	H			4
AC LOW						H	3-7/8		4
ADDR ACCEPTED			1		A02S1	L	1-2/8		5
ADDR ACCEPTED					A03N1	L	1-2/8		5
ADDR ACCEPTED						L			5
ADDRESS INVALID			1		B02F1	L	0-5/8		6
ADDRESS INVALID					B03F1	L			6
ADDRESS INVALID						L	0-5/8		6
BLOWER MTR RELAY DR			1		A04A1	H	5-5/8		7
BLOWER MTR RELAY DR					B06N1	H			7
BLOWER MTR RELAY DR						H	5-5/8		7
BUS ADDR ACCEPTED			1		A02R1	L	3-2/8		8
BUS ADDR ACCEPTED			2		A07R2	L	1		8
BUS ADDR ACCEPTED					A08R2	L			8
BUS ADDR ACCEPTED						L	4-2/8		8
BUS ADDR INVALID			2		A08T2	L	1		9
BUS ADDR INVALID			1		A07T2	L	4-1/8		9
BUS ADDR INVALID					B02A1	L			9
BUS ADDR INVALID						L	5-1/8		9
BUS FILE READY			1		A04M1	L	4-6/8		10
BUS FILE READY			2		B08N1	L	1		10
BUS FILE READY					B07N1	L			10
BUS FILE READY						L	5-6/8		10
BUS INDEX PUL			1		A02K1	L	4-6/8		11
BUS INDEX PUL			2		B08M1	L	1		11
BUS INDEX PUL					B07M1	L			11
BUS INDEX PUL						L	5-6/8		11
BUS P/W/S READY			1		A02N1	L	3-5/8		12
BUS P/W/S READY			2		A07H2	L	1		12
BUS P/W/S READY					A08H2	L			12
BUS P/W/S READY						L	4-5/8		12

RK05.C 2-Jun-76 8156 PAGE 2

PIN NAME	Y	X	Z	REMARKS	PIN NAME	A/P	PIN ORDER	NO LENGTH EXCEPTIONS FLAG	RUN NUMBER
BUS SECTOR ADDR			1		A02H1	L	4-7/8		13
BUS SECTOR ADDR			2		B08K1	L	1		13
BUS SECTOR ADDR					B07L1	L			13
BUS SECTOR ADDR						L	5-7/8		13
BUS SECTOR ADDR 1			1		A02J1	L	3-5/8		14
BUS SECTOR ADDR 1			2		A07P2	L	1		14
BUS SECTOR ADDR 1					B08P2	L			14
BUS SECTOR ADDR 1						L	4-5/8		14
BUS SECTOR ADDR 2			1		A02L1	L	4-1/8		15
BUS SECTOR ADDR 2			2		B07K2	L	1		15
BUS SECTOR ADDR 2					B08K2	L			15
BUS SECTOR ADDR 2						L	5-1/8		15
BUS SECTOR ADDR 3			1		B02P1	L	4-1/8		16
BUS SECTOR ADDR 3			2		B07J1	L	1		16
BUS SECTOR ADDR 3					B08J1	L			16
BUS SECTOR ADDR 3						L	5-1/8		16
BUS SECTOR PULSE			1		B02F1	L	5-2/8		17
BUS SECTOR PULSE			2		B08N2	L	1		17
BUS SECTOR PULSE					B07N2	L			17
BUS SECTOR PULSE						L	6-2/8		17
BUS SEEK INCOMPLETE			1		A02N1	L	3-3/8		18
BUS SEEK INCOMPLETE			2		A07S2	L	1		18
BUS SEEK INCOMPLETE					A08S2	L			18
BUS SEEK INCOMPLETE						L	4-3/8		18
BUS WR PROTECT STATUS			1		B04U1	H	2-3/8		19
BUS WR PROTECT STATUS			2		B07P1	H	1		19
BUS WR PROTECT STATUS					B08P1	H			19
BUS WR PROTECT STATUS						H	3-3/8		19
BUS WRITE CK			1		B04P1	H	2-3/8		20
BUS WRITE CK			2		B07K1	H	1		20
BUS WRITE CK					B08K1	H			20
BUS WRITE CK						H	3-3/8		20
COS POSITION			1		A05U1	H	1-5/8		21
COS POSITION					B06R1	H	1		21
COS POSITION						H	1-5/8		21
COUNT PULSE FWD			1		A05S1	H	5-1/8		22
COUNT PULSE FWD					B06K1	H	1		22
COUNT PULSE FWD						H	5-1/8		22
COUNT PULSE REV			1		A05T1	H	4-3/8		23
COUNT PULSE REV					B03F1	H	1		23
COUNT PULSE REV						H	4-3/8		23
CYC ADDR 0			2		A07K1	L	1		24
CYC ADDR 0			1		B08R1	L	4-4/8		24
CYC ADDR 0					B03L1	L			24
CYC ADDR 0						L	5-4/8		24

RK05.C *PP269.V34(02)-1 31-Jul-75
2-Jun-76 PAGE 3

RUN NAME	A/P	PIN NAME	ORDER PIN	RAY - ORDER	D	DRA. OPT	RV RG	Y	X	Z	REMARKS	NC LENGTH EXCEPTIONS FLAG	RUN NUMBER
CYC ADDR 1	L	A07F1	1-01	*		D05-6				2		1	25
CYC ADDR 1	L	A08D1	1-02	*		D05-6				1		6-4/8	25
CYC ADDR 1	L	A03N1	1-03	*		D05-6							25
CYC ADDR 1	L		1									7-4/8	25
CYC ADDR 2	L	A08L1	1-01	*		D05-6				2		1	26
CYC ADDR 2	L	A07L1	1-02	*		D05-6				1		5-3/8	26
CYC ADDR 2	L	A03F1	1-03	*		D05-6						6-3/8	26
CYC ADDR 2	L		1										26
CYC ADDR 3	L	A07C1	1-01	*		D05-6				2		1	27
CYC ADDR 3	L	A08C1	1-02	*		D05-6				1		5-2/8	27
CYC ADDR 3	L	A03M1	1-03	*		D05-6						6-2/8	27
CYC ADDR 3	L		1										27
CYC ADDR 4	L	A07F1	1-01	*		D05-6				2		1	28
CYC ADDR 4	L	A08F1	1-02	*		D05-6				1		6-4/8	28
CYC ADDR 4	L	A03P1	1-03	*		D05-6						7-4/8	28
CYC ADDR 4	L		1										28
CYC ADDR 5	L	A07J1	1-01	*		D05-6				2		1	29
CYC ADDR 5	L	A08J1	1-02	*		D05-6				1		5-3/8	29
CYC ADDR 5	L	A03U1	1-03	*		D05-6						6-3/8	29
CYC ADDR 5	L		1										29
CYC ADDR 6	L	A08F1	1-01	*		D05-6				2		1	30
CYC ADDR 6	L	A07E1	1-02	*		D05-6				1		6-5/8	30
CYC ADDR 6	L	A03V1	1-03	*		D05-6						7-5/8	30
CYC ADDR 6	L		1										30
CYC ADDR 7	L	A07H1	1-01	*		D05-6				2		1	31
CYC ADDR 7	L	A08H1	1-02	*		D05-6				1		5-2/8	31
CYC ADDR 7	L	A03S1	1-03	*		D05-6						6-2/8	31
CYC ADDR 7	L		1										31
DC LOA	H	A04D1	1-01	*		D05-8				1		5	32
DC LOA	H	F08F2	1-02	*		D05-8				2		1	32
DC LOA	H	A07F2	1-03	*		D05-8							32
DC LOA	H		1									6-6/8	32
DIFF 1	L	A03A1	1-01	*		D05-7				1		5-7/8	33
DIFF 1	L	A05B2	1-02	*		D05-7						5-7/8	33
DIFF 1	L		1									5-7/8	33
DIFF 16	L	A03E1	1-01	*		D05-7				1		5-7/8	34
DIFF 16	L	A05T2	1-02	*		D05-7						5-7/8	34
DIFF 16	L		1										34
DIFF 2	L	A03H1	1-01	*		D05-7				1		5-5/8	35
DIFF 2	L	A05P2	1-02	*		D05-7						5-5/8	35
DIFF 2	L		1										35
DIFF 3	L	A03D1	1-01	*		D05-7				1		5-5/8	36
DIFF 3	L	A05R2	1-02	*		D05-7						5-5/8	36
DIFF 3	L		1										36

RK05.C *PP2MA.V34(02)-1 31-Jul-75
2-Jun-76 PAGE 4

RUN NAME	A/P	PIN NAME	ORDER PIN	RAY - ORDER	D	DRA. OPT	RV RG	Y	X	Z	REMARKS	NC LENGTH EXCEPTIONS FLAG	RUN NUMBER
DIFF 4	L	A03C1	1-01	*		D05-7				1		5-7/8	37
DIFF 4	L	A05S2	1-02	*		D05-7						5-7/8	37
DIFF 4	L		1										37
DISK RELAY OR	H	A04B1	1-01	*		D05-9				1		4-1/8	38
DISK RELAY OR	H	F06P1	1-02	*		D05-9						4-1/8	38
DISK RELAY OR	H		1										38
DR UNLOCKING SOLENOID	L	A06P1	1-01	*		D05-8				1		4-5/8	39
DR UNLOCKING SOLENOID	L	B04V1	1-02	*		D05-8						4-5/8	39
DR UNLOCKING SOLENOID	L		1										39
FAULT END	H	A04N2	1-01	*		D05-8				1		1-3/8	40
FAULT END	H	A06H1	1-02	*		D05-8						1-3/8	40
FAULT END	H		1										40
END	H	B03J1	1-01	*		D05-5				1		1-6/8	41
END	H	B05J2	1-02	*		D05-5						1-6/8	41
END	H		1										41
GND A1		A01C2	1-01	*						1		2-1/8	42
GND A1		A01T1	1-02	*						2		1-5/8	42
GND A1		F01C2	1-03	*						1		2-1/8	42
GND A1		F01T1	1-04	*									42
GND A2		A02C2	1-01	*						1		5-7/8	42
GND A2		A02T1	1-02	*						2		2-1/8	43
GND A2		B02C2	1-03	*						1		1-5/8	43
GND A2		B02T1	1-04	*								2-1/8	43
GND A3		A03C2	1-01	*						1		5-7/8	43
GND A3		A03T1	1-02	*						2		2-1/8	44
GND A3		B03C2	1-03	*						1		1-5/8	44
GND A3		B03T1	1-04	*								2-1/8	44
GND A4		A04C2	1-01	*						1		5-7/8	44
GND A4		A04T1	1-02	*						2		2-1/8	45
GND A4		B04C2	1-03	*						1		1-5/8	45
GND A4		B04T1	1-04	*								2-1/8	45
GND A5		A05C2	1-01	*						1		5-7/8	45
GND A5		A05T1	1-02	*						2		2-1/8	46
GND A5		B05C2	1-03	*						1		1-5/8	46
GND A5		B05T1	1-04	*								2-1/8	46
GND A5			1									5-7/8	46

X	Z	REMARKS	DESC	PIN NAME	ORDER PIN	RAY = Q ORDER	OPAW OPT	RV RG	HUN NUMBER
					2-1/8				47
1	2			A06C2	1-1/8	1-01 *			47
2	1			A06T1	1-5/8	1-02 *			47
1	1			A06C2	0-2/4	1-03 *			47
1	1			A05C1	0-4/8	1-04 *			47
1	2			A06F1	2-5/8	1-05 *		D25-3	47
1	1			A06T1	1-4/8	1-06 *		D25-3	47
				A06S1	2-1/8	1-07 *		D25-3	47
					1-2/8	1		D25-3	47
1	1			A07R2	2-1/8	1-01 *			48
2	1			A07C2	1-5/8	1-02 *			48
1	1			A07T1	0-1/8	1-03 *			48
2	1			A07F1	0-1/8	1-04 *			48
1	2			A07R1	2-1/8	1-05 *			48
2	1			A07S1	0-1/8	1-06 *			48
1	1			A07T1	0-3/8	1-07 *			48
2	1			A07T1	1-3/8	1-08 *			48
1	1			A07R2	2-1/8	1-09 *			48
1	2			A07C2	0-1/8	1-10 *			48
1	1			A07R1	0-1/8	1-11 *			48
1	1			A07T1	1-7/8	1-12 *			48
1	2			A07V2	2-4/8	1-13 *			48
						1-14 *			48
					0-7/8	1			48
1	1			A08R2	1-01 *				49
2	1			A08C2	1-02 *				49
1	1			A08T1	1-03 *				49
2	1			A08R1	1-04 *				49
1	1			A08F1	1-05 *				49
2	1			A08S1	1-06 *				49
1	1			A08T1	1-07 *				49
2	1			A08T1	1-08 *				49
1	1			A08R2	1-09 *				49
2	1			A08C2	1-10 *				49
1	1			A08R1	1-11 *				49
1	2			A08V2	1-12 *				49
					1-13 *				49
					1-14 *				49
					0-7/8	1			49
1	1		L	B02F1	1-01 *			D25-5	50
		GOOD STROBE	L	B03D1	1-02 *			D25-5	50
		GOOD STROBE	L			1			50
1	1		L	A01P1	1-01 *			D25-1	51
2	1		L	B07V2	1-02 *			D25-1	51
			L	B08W2	1-03 *			D25-1	51
			I			1			51
1	1		L	A01P2	1-01 *			D25-4	52
2	1		L	B07P2	1-02 *			D25-4	52
			L	B08P2	1-03 *			D25-4	52
			L			1			52

X	Z	REMARKS	DESC	PIN NAME	ORDER PIN	RAY = Q ORDER	OPAW OPT	RV RG	HUN NUMBER
					2-1/8				53
2	1		L	B08R1	2-3/8	1-01 *			53
1	1		L	B08W1		1-02 *			53
			L	B08F1	4-8/8	1-03 *			53
			L			1			53
1	1		L	B07F2	1-01 *			D25-3	54
			L	B08J1	1-02 *			D25-3	54
			L		1-4/8	1			54
			L		1-6/8	1-01 *			54
1	1		L		1-7/8	1-02 *			54
			L		1-7/8	1			54
			L	B02D1		1-01 *		D25-5	55
1	1		L	B04H2		1-02 *		D25-5	55
2	1		L			1			55
			L		3-3/8	1-01 *			56
			L		2-3/8	1-02 *		D25-2	56
			L		3-5/8	1-03 *		D25-2	56
			L			1			56
1	1		L	B04H1		1-01 *		D25-7	57
			L	B06P1		1-02 *		D25-7	57
			L		1-7/8	1			57
1	1		L		3-3/8	1-01 *			58
			L		3-3/8	1-02 *			58
			L			1			58
1	1		L		1	1-01 *			59
			L			1-02 *			59
			L		1-6/8	1			59
1	1		L	B03C1		1-01 *		D25-6	60
			L	B04C1		1-02 *		D25-6	60
			L		1-7/8	1			60
			L		1-7/8				60
1	1		L		3-3/8	1-01 *		D25-8	61
			L	B04H1		1-02 *		D25-8	61
			L	B04J1		1			61
1	1		L		3-3/8	1-01 *			62
			L	B06P1		1-02 *		D25-7	62
			L	B04D1		1			62
1	1		L		4-1/8	1-01 *			62
			L	B02P1		1-02 *		D25-2	62
			L			1			62
1	1		L		3-5/8	1-01 *			63
			L	B01H2		1-02 *		D25-1	63
			L	B04H1		1-03 *		D25-1	63
			L			1			63
1	1		L		3-5/8	1-01 *			64
			L	B04H1		1-02 *			64
			L		3-3/8	1			64
1	1		L		2-1/8	1-01 *			65
			L	B03H1		1-02 *		D25-5	65
			L		2-1/8	1			65

| | | |