"THE MATERIAL HEREIN IS FOR INFORMATION PURPOSES ONLY AND IS SUBJECT TO CHANGE WITHOUT NOTICE. DIGITAL EQUIPMENT CORPORATION ASSUMES NO RESPONSIBILITY FOR ANY ERRORS WHICH MAY APPEAR HEREIN."

FIELD MAINTENANCE PRINT SET

"THIS DRAWING AND SPECIFICATIONS, HEREIN, ARE THE PROPERTY OF DIGITAL EQUIPMENT CORPORATION AND SHALL NOT BE REPRODUCED OR COPIED OR USED IN WHOLE OR IN PART AS THE BASIS FOR THE MANUFACTURE OR SALE OF ITEMS WITHOUT WRITTEN PERMISSION. COPYRIGHT © 1981 DIGITAL EQUIPMENT CORPORATION."

TABLE OF CONTENTS

B-TC-KDF11-B-1	FIELD MAINTENANCE PRINT SET
D-UA-KDF11-B-Ø	UNIT ASSY, KDF11-B
K-PL-KDF11-B-DBP	PARTS LIST, KDF11-B
B-DD-M8189-Ø	DRAWING DIRECTORY, M8189
D-UA-M8189-Ø-Ø	UNIT ASSY, M8189
K-PL-M8189-Ø-DBP	M8189 PARTS LIST
D-CS-M8189-Ø-K1	TIMING LOGIC & MIB DECODE
D-CS-M8189-Ø-K2	BUS CONTROL LOGIC
D-CS-M8189-Ø-K3	SERVICE RESET & ODT LOGIC
D-CS-M8189-Ø-K4	F11 CHIPS & FIXED DATA
D-CS-M8189-Ø-K5	CDAL/BDAL INTERFACE
D-CS-M8189-Ø-K6	CDAL/IDAL INTERFACE
D-CS-M8189-Ø-K7	IDAL ADRS DECODE
D-CS-M8189-Ø-K8	BOOT & CLOCK LOGIC
D-CS-M8189-Ø-K9	CONSOLE & SECOND SLU
D-CS-M8189-Ø-K10	BAUD RATE & -12V
D-CS-M8189-Ø-K11	CONFIGURATION GUIDE
B-DD-KEF11-BB	CIS MICROCODE HYBRID

UNIT VARIATIONS COVERED BY THIS PRINT SET
KDF11-BA
KDF11-BB
KDF11-BC
KDF11-BD

KDF11-B

Field Maintenance Print Set

Digital Equipment Corporation

Print Set Part Number MP- Ø1236

REV A

NUMBER KDF11-B-1

CODE TC

SIZE B

REVISION HISTORY

REV.	ECO NUMBER	DATE
A	INITALIZE	6/17/81
B	KDF11-B-ML ØØ1	12 APR 82

DRN.	P. BROSNIHAN	DATE	4/4/81
CHK'D.	G. MARINI	DATE	4/4/81
DES. ENG.	Jay Nichols	DATE	22-JUN-81
RESP. ENG.	C. D. Valentine	DATE	22-JUN-81
FIELD SERVICE	G. Marcher	DATE	23-JUN-81
NEXT HIGHER DOC.	11/23-B		

TITLE

digital

FIELD MAINTENANCE PRINT SET
KDF11-B

DOCUMENT NUMBER			
SIZE	CODE	NUMBER	REV.
B	TC	KDF11-B-1	B
		SHEET 1 OF 1	

DRB 124A

ML 3

"THIS DRAWING AND SPECIFICATIONS, HEREIN, ARE THE PROPERTY OF DIGITAL EQUIPMENT CORPORATION AND SHALL NOT BE REPRODUCED OR COPIED OR USED IN WHOLE OR IN PART AS THE BASIS FOR THE MANUFACTURE OR SALE OF ITEMS WITHOUT WRITTEN PERMISSION.
COPYRIGHT © 1981, DIGITAL EQUIPMENT CORPORATION"

TABLE 1. BOOT/DIAG. SELECTION GUIDE FOR SWITCH PACK E1Ø2

SWITCH	ON	OFF
S1	EXECUTE CPU TEST	SKIP CPU TEST
S2	EXECUTE MEMORY TEST	SKIP MEMORY TEST
S3	EXECUTE DECNET BOOT PROGRAM SELECTED BY S4-S7 PER TABLE 2.	EXECUTE STANDARD BOOT PROGRAM PER SWITCH S4
S4	EXECUTE DIALOGUE BOOT PROGRAM. OPERATOR RESPONDS WITH MNEMONIC PER TABLE 3.	EXECUTE AUTOMATIC (TURNKEY) BOOT PROGRAM SELECTED BY S5-S8 PER TABLE 3.

TABLE 2 DECNET BOOT DEVICE SELECTION (S3 ON)

S4	S5	S6	S7	DEVICE
ON	X	X	X	DUV11
OFF	ON	X	OFF	DLV11-E
OFF	ON	X	ON	DLV11-F

NOTE: X = DON'T CARE

TABLE 3 STANDARD BOOT DEVICE SELECTION (S3 OFF)

MNEMONIC	S5	S6	S7	S8	DEVICE
DKn; n<8	OFF	OFF	OFF	ON	RK05
DLn; n<4	OFF	OFF	ON	OFF	RL01/RL02
DDn; n<2	OFF	OFF	ON	ON	TU58
DXn; n<2	OFF	ON	OFF	OFF	RX01
DYn; n<2	OFF	ON	ON	OFF	RX02

LEGEND

NUMBER	DESCRIPTION
KDF11-BA	M8189-ØØ PLUS KTF11-AA & BOOT/DIAG. ROMS
KDF11-BB	M8189-ØØ PLUS KTF11-AA, KEF11-AA & BOOT/DIAG. ROMS
KDF11-BC	M8189-ØØ PLUS BOOT/DIAG. ROMS
KDF11-BD	M8189-ØØ PLUS KTF11-AA, KEF11-BB & BOOT/DIAG. ROMS

NOTES:

1. WHEN INSTALLING ITEMS 2,3,8&9 MAKE SURE THAT PIN 1 IS LOCATED AS SHOWN.
2. WHEN ITEMS 8 & 9 ARE MASKED ROMS CONNECT J23 TO J24 WITH J22 NOT CONNECTED. WHEN ITEMS 8 & 9 ARE EPROMS CONNECT J22 TO J23 WITH J24 NOT CONNECTED.
3. BAUD RATE SELECTION. SEE D-CS-M8189-Ø-K11. SETTINGS SHOWN PRODUCE 9600 BAUD EACH LINE.
4. KEF11-BB=CIS MICROCODE HYBRID. CONTAINS CIS MICROCODE TO IMPLEMENT THE COMMERCIAL INSTRUCTION SET.

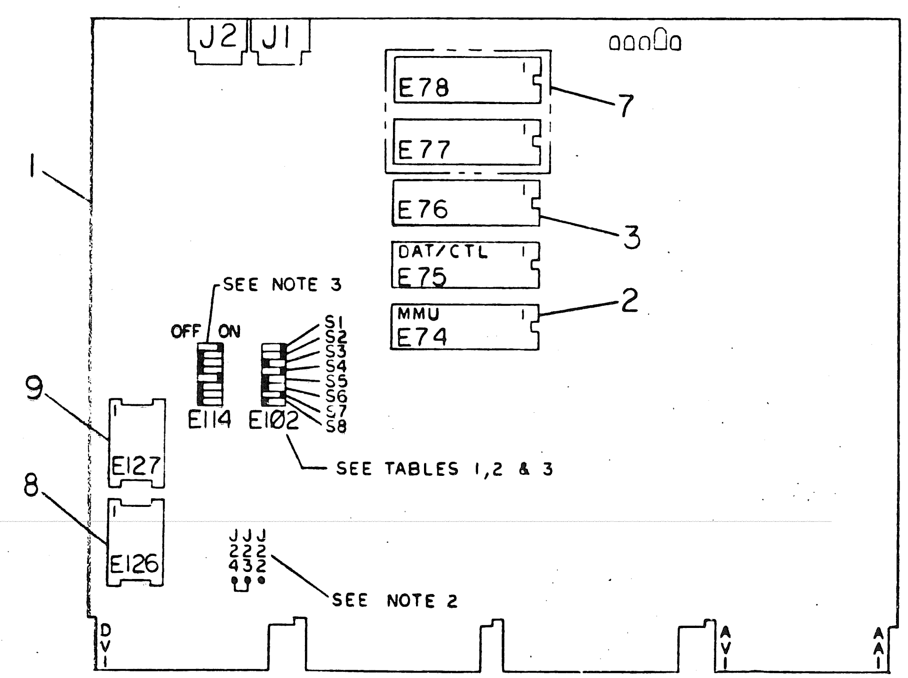

CAUTION: OFF SHEET PARTS LIST EXISTS, SEE K-PL-KDF11-B-DBP

REVISIONS			
REV.	CHANGE NO.		CHK
A	INITIAL	12-APR-82	
B	KDF11-B-ML001	C. VALENTINE 5-13-82	

DESCRIPTION	DWG PART NO / ITEM NO.
UNLESS OTHERWISE SPECIFIED DIMENSIONS ARE IN INCHES	
THIRD ANGLE PROJECTION	
REMOVE BURRS AND BREAK SHARP CORNERS	
DO NOT SCALE DWG	
DRN H. Cullison	FIRST USED ON 11/23-B
TITLE	KDF11-B CPU UNIT ASSEMBLY
NEXT HIGHER ASSY.	
SIZE	D
CODE	UA
NUMBER	KDF11-B Ø
REV	B
SCALE	NONE
SHEET	1 OF 1

digital

D UA KDF11-B-Ø B

AUTOMATED BY PRTLST.3P(44)

P A R T S L I S T

LINE	ITEM	DOCUMENT NUMBER	PART NUMBER	DESCRIPTION	QUANTITY PER VARIATION BA	BB	BC
1	1		M8189-00	KDF11-B QUAD HT CPU,Q AND Q-22 B	1	1	1
2	2		2115542-01	DC 304 F11 MMU,FLOAT PT REG	1	1	-
3	3		5700001-00	HYBRID ASSY FLOATING POINT	-	1	-
4	4		23244E2-00	E2-04	1	1	1
5	5		23245E2-00	E2-04	1	1	1
6	6		H3270-00	TEST CONNECTOR	1	1	1

7 NOTE: ITEM #6, THE WRAP-AROUND-TEST JUMPER FOR CONNECTOR J2, IS NOT SHOWN ON UA DWG.
8 NOTE: FOR BULK INTERPLANT SHIPMENT OF MODULES REFER TO PACKAGING INSTRUCTION A-SP-3700053-0-0
9 NOTE: FOR SHIPMENT OF INDIVIDUAL MODULES REFER TO PACKAGING INSTRUCTION A-SP-3700069-0-0

REVISION HISTORY			BASIC PART NO: KDF11										
ENG	ECO NUMBER	REV	SECTION A OF A	DRN: P. BROSNIHAN	DATE: 21-JAN-81		D	I	G	I	T	A	L
---	INITIAL	A	SECTION. VARIATION INDEX	CHK'D: G. MARINI	DATE: 27-MAY-81	TITLE PARTS LIST							
			[A] BA,BB,BC			KDF11-B CPU UNIT ASSEMBLY							
			[B]	DES.ENG.: C. VALENTINE	DATE: 21-JAN-81								
			[C]			DOCUMENT NUMBER							
			[D]	RESP.ENG.: C. VALENTINE	DATE: 21-JAN-81	SIZE	CODE	NUMBER				REV	
			[E]	MFG.ENG.: T. OLMO	DATE: 27-APR-81	K	PL	KDF11-B-DBP				A	
			[F]	ASSEMBLY NUMBER: C-UA-KDF11-B-0	TOP DOCUMENT NUMBER: #B-DD-KDF11-B			FILE NAME: Z2423A.PLS				EDIT # 4	

"THIS DRAWING AND SPECIFICATIONS HEREIN, ARE THE PROPERTY OF DIGITAL EQUIPMENT CORPORATION AND SHALL NOT BE REPRODUCED OR COPIED OR USED IN WHOLE OR IN PART AS THE BASIS FOR THE MANUFACTURE OR SALE OF ITEMS WITHOUT WRITTEN PERMISSION.
COPYRIGHT (C) 1981. DIGITAL EQUIPMENT CORPORATION "

SIZE	CODE	NUMBER	REV.
B	DD	M8189-Ø	A

DRAWING NO.	NO. OF SHTS.	PART NO.	DESCRIPTION	REVISIONS
		M8189-ØØ	KDF11-B CPU MODULE	
D-UA-M8189-Ø-Ø	2		KDF11-B CPU MODULE	A
K-PL-M8189-Ø-DBP	3		KDF11-B CPU MODULE	A
K-PC-M8189-Ø-DB			P.C. DESIGN DATA BASE	C
		5Ø14313-ØØ	P.C. BOARD	C
D-MD-5Ø14313-Ø-Ø	6		DRILL & ETCH DRAWING	A
D-EC-5Ø14313-Ø-Ø	2		ETCH CUT DRAWING	A
K-CS-M8189-0-DBS			CIRCUIT DATA BASE	A
D-CS-M8189-Ø-K1	1		TIMING LOGIC & MIB DECODE	A
D-CS-M8189-Ø-K2	1		BUS CONTROL LOGIC	A
D-CS-M8189-Ø-K3	1		SERVICE, RESET & ODT LOGIC	A
D-CS-M8189-Ø-K4	1		F11 CHIPS & FIXED DATA	A
D-CS-M8189-Ø-K5	1		CDAL/BDAL INTERFACE	A
D-CS-M8189-Ø-K6	1		CDAL/IDAL INTERFACE	A
D-CS-M8189-Ø-K7	1		IDAL ADRS DECODE	A
D-CS-M8189-Ø-K8	1		BOOT & CLOCK LOGIC	A
D-CS-M8189-Ø-K9	1		CONSOLE & SECOND SLU	A
D-CS-M8189-Ø-K10	1		BAUD RATE & -12V	A
D-CS-M8189-Ø-K11	1		CONFIGURATION GUIDE	A

NOTES:

REVISIONS	REV.	CHG NO.	DATE

"THIS DRAWING AND SPECIFICATIONS, HEREIN, ARE THE PROPERTY OF DIGITAL EQUIPMENT CORPORATION AND SHALL NOT BE REPRODUCED OR COPIED OR USED IN WHOLE OR IN PART AS THE BASIS FOR THE MANUFACTURE OR SALE OF ITEMS WITHOUT WRITTEN PERMISSION.

COPYRIGHT© 1981 DIGITAL EQUIPMENT CORPORATION

DRB 126

digital

USED ON OPTION/MODEL
KDF11-B

DRN.	R. BARILONE	2DEC80
CHK'D	D. DROZD	22JAN81
ENG.	J. NICHOLS	13APR81
PROD.	T. OLMO	13APR81

TITLE KDF11-B CPU MODULE

SIZE	CODE	NUMBER	REV.
B	DD	M8189-Ø	A

SHEET 1 OF 1

THIS DRAWING AND SPECIFICATIONS, HEREIN, ARE THE PROPERTY OF DIGITAL EQUIPMENT CORPORATION AND SHALL NOT BE REPRODUCED OR COPIED OR USED IN WHOLE OR IN PART AS THE BASIS FOR THE MANUFACTURE OR SALE OF ITEMS WITHOUT WRITTEN PERMISSION.
COPYRIGHT © 1961 DIGITAL EQUIPMENT CORPORATION

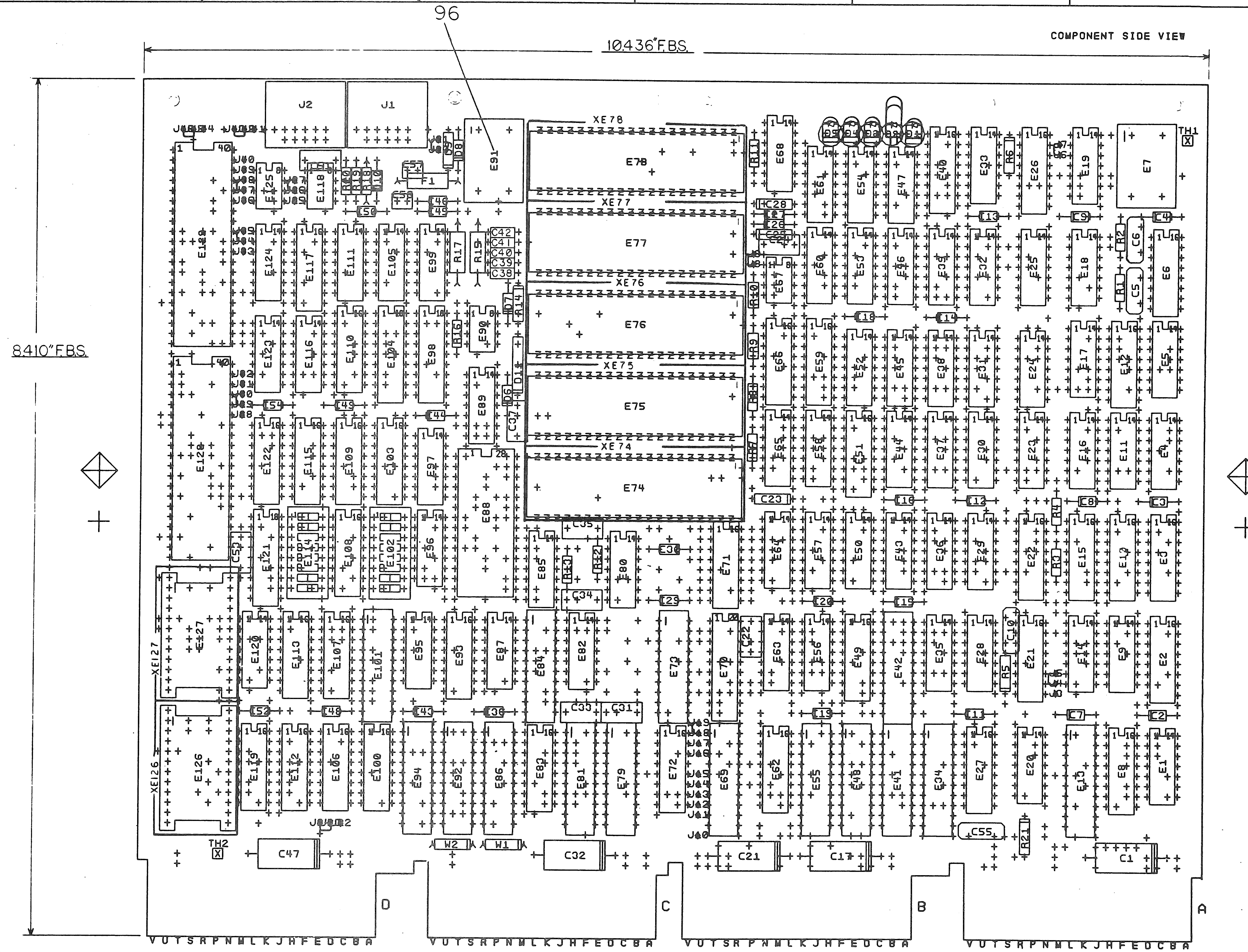

NOTES:

STEP &	↑ Y AXIS	STEP	TIMES
REPEAT	→ X AXIS	STEP	TIMES

REV	CHANGE NO	CHK

ETCH REV. C

SIGNATURES	DATE
DRN.	10-23-80
CHK'D.	10-27-80
MECH. ENG. Charlie Valentine	4-7-81
PROJ. ENG. Jay Nichols	4-13-81
PROD.	4-13-81
SCALE 2 - 1	
SHT. 1 OF 2	
NEXT HIGHER ASSY. B-DD-M8189-0	

digital

TITLE KDF11-B CPU MODULE

SIZE	CODE	NUMBER	REV
D	UA	M8189-0-0	A

1 WO#275022C

"THIS DRAWING AND SPECIFICATIONS, HEREIN, ARE THE PROPERTY OF DIGITAL EQUIPMENT CORPORATION AND SHALL NOT BE REPRODUCED OR COPIED OR USED IN WHOLE OR IN PART AS THE BASIS FOR THE MANUFACTURE OR SALE OF ITEMS WITHOUT WRITTEN PERMISSION.
COPYRIGHT 1981 DIGITAL EQUIPMENT CORPORATION"

JUMPER TABLE				
ITEM NO	DESCRIPTION	FROM	TO	
97	MINI JUMPER	J4	J5	SEE NOTE 1
		J6	J7	
		J8	J9	
		J18	J19	
		J20	J21	
		J23	J24	
		J26	J27	
		J29	J30	
		J34	J35	
		J37	J38	
		J42	J43	
		J45	J46	

NOTES: 1. WHEN MASKED ROM'S ARE USED, CONNECT J24 TO J23, J22 IS NOT CONNECTED.

WHEN EPROM'S ARE USED, CONNECT J22 TO J23, J24 IS NOT CONNECTED.

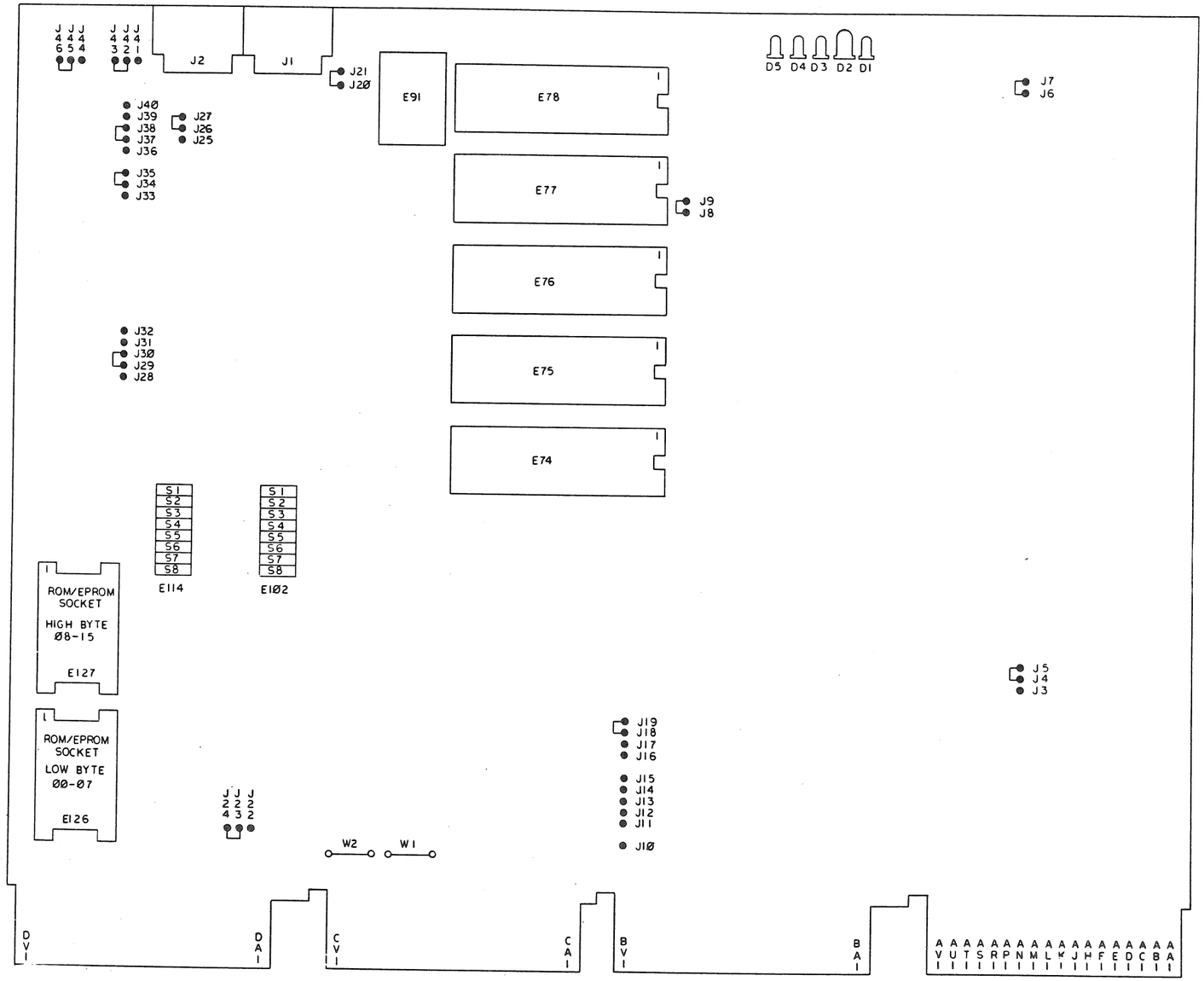

REVISION HISTORY		
DATE	ECO NUMBER	REV.

DRD 136A

TITLE KDF11-B CPU MODULE

DOCUMENT NUMBER			
SIZE	CODE	NUMBER	REV.
D	UA	M8189-0-0	A
SCALE		SHEET 2 OF 2	

SIZE D CODE UA NUMBER M8189-0-0 REV A

LINE	ITEM	DOCUMENT NUMBER	PART NUMBER	DESCRIPTION	QTY PER VARIATION 00		REFERENCE DESIGNATOR
1	1	D-MD-5014313-0-0	5014313-00	DRILL AND ETCH BD.	1		
2	2		1000022-00	270.0 MMF 100V 5%200PPM MICA	1		C10
3	3		1000024-00	470.0 MMF 100V 5%200PPM MICA	3		C5,C6,C55
4	4		1001610-00	.01 MFD 50V +80-20% 25U CER	3		C26,C27,C30
5	5		1012784-00	.047 MFD 50V +80-20% CER	29		C2-C4,C7-C9,C11-C16,C18-C20,C23,
						CONT	C25,C28,C29,C36,C43-C46,C48-C50,
						CONT	C52,C54
6	6		1016681-00	.47 MFD 50V +80-20% CER	14		C22,C24,C31,C33-C35,C37-C42,C51,
						CONT	C53
7	7		1017472-00	10 MFD 35V +50-10% AL EL	5		C1,C17,C21,C32,C47
8	8		1011740-02	1800.0 MMF 50V 10% CER	2		C56,C57
9	9		1109977-00	1N 749A VZ= 4.3 5%	1		D9
10	10		1112689-00	LED .8MCD@16MA VF=5V	4		D1,D3-D5
11	11		1114384-00	LED 105MW 35MA GREEN	1		D2
12	12		1100114-00	D 664 QS\75PCB PIV= 25V SP	3		D6-D8
13	13		1110967-00	1N 4005 PIV=600 I= 1A DO41 SI	1		D10
14	14		1105508-00	1N 823 VZ= 6.2 5% .40W Y	1		D11
15	15		1213506-04	HEADER 10POS RT ANGLE W/3 SI	2		J1,J2
16	16		1215006-06	SOCKET 24PIN IC LOW PROFILE	2		XE126,XE127
17	17		1216116-00	SOCKET 40PIN	5		XE74-XE78
18	18		1210929-02	FUSE, SUB-MINI 1.000A, 125V, A	1		F1
19	19		1211164-04	SW,DIP 1P 1A 8POS	2		E102,E114
20	20		1213113-01	HANDLE,MODULE,	1		
21	21		1300229-00	100.0 .25 W 5.0 % CC	1		R7
22	22		1300316-00	470.0 .25 W 5.0 % CC	3		R6,R12,R16
23	23		1300365-00	1.0 K .25 W 5.0 % CC	4		R3,R4,R8,R11
24	24		1300488-00	12.0 K .25 W 5.0 % CC	2		R19,R20
25	25		1301322-00	180.0 .25 W 5.0 % CC	1		R13
26	26		1301808-00	22.0 K .25 W 5.0 % CC	1		R18
27	27		1302177-00	47.0 K .25 W 5.0 % CC	2		R1,R2

REVISION HISTORY			BASIC PART NO: M8189
ENG	ECO NUMBER	REV	SECTION A OF A
---	INITIAL	A	SECTION.VARIATION INDEX
			[A] 00
			[B]
			[C]
			[D]
			[E]
			[F]
			[H]
			[J]
			[K]
			[L]
			[M]
			[N]

DRN: R. BUREAU	DATE: 11-JUL-80	D I G I T A L
CHK'D: BOB BARILONE	DATE: 11-JUL-80	TITLE PARTS LIST KDF11-B CPU MODULE
DES.ENG: C.A. VALENTINE	DATE: 14-APR-81	
RESP.ENG.: JAY NICHOLS	DATE: 14-APR-81	DOCUMENT NUMBER
MFG.ENG.: TOMAS OLMO	DATE: 14-APR-81	SIZE: K / CODE: PL / NUMBER: M8189-0-DBP / REV: A
ASSEMBLY NUMBER: D-UA-M8189-0-0	TOP DOCUMENT NUMBER: B-DD-M8189-0-0	FILE NAME: Z1037A.PLS / EDIT #: 17

"THIS DRAWING AND SPECIFICATIONS HEREIN, ARE THE PROPERTY OF DIGITAL EQUIPMENT CORPORATION AND SHALL NOT BE REPRODUCED OR COPIED OR USED IN WHOLE OR IN PART AS THE BASIS FOR THE MANUFACTURE OR SALE OF ITEMS WITHOUT WRITTEN PERMISSION. COPYRIGHT (C) 1981. DIGITAL EQUIPMENT CORPORATION "

P A R T S L I S T

LINE	ITEM	DOCUMENT NUMBER	PART NUMBER	DESCRIPTION	QTY PER VARIATION 00	REFERENCE DESIGNATOR
28	28		1302602-00	56.0 .25 W 5.0 % CC	1	R5
29	29		1309422-00	5.10 .25 W 5.0 % CC	2	R9,R10
30	30		1311003-01	R NETWORK 14-180 14-390 16PIN	3	E8,E27,E62
31	31		1301320-00	1.20 K .25 W 5.0 % CC	1	R21
32	32		1300005-03	R NETWORK 13-10K 5.0 % 14PIN	1	E123
33	33		1300005-07	R NETWORK 15-4.7K 5.0 % 16PIN	3	E72,E108,E122
34	34		1300228-00	100.0 .50 W 5.0 % CC	2	R15,R17
35	35		1303178-00	620.0 .25 W 5.0 % CC	1	R14
36	36		1811660-02	OSCILLATOR, XTAL 5.0688 MHZ	1	E91
37	37		1811660-20	OSCILLATOR, XTAL 26.666 MHZ	1	E7
38	38		1910544-00	74S74 FF-D DUAL,EDGE TRIGG	8	E17,E19,E29,E30,E36,E38,E43,E50
39	39		1910548-00	74S157 MUX 1 OF 2 (QUAD)	1	E15
40	40		1910550-00	74S174 FF-D HEX	5	E3,E10,E21,E26,E51
41	41		1910957-00	74S175 FF-D QUAD COMMON CLO	4	E12,E22,E40,E59
42	42		1911117-00	DEC 8838 TRANSCEIVER,BUS,QUA	1	E2
43	43		1911469-00	DEC 8640 RECEIVER,BUS,QUAD,U	3	E1,E20,E63
44	44		1909705-00	DEC 8881 NAND GATE-QUAD 2IN O	1	E9
45	45		1911675-00	74S138 DECODER/DEMUX 3-8 LIN	1	E66
46	46		1911712-00	74S51 AND-OR GATE-INVERT D	1	E45
47	47		1912098-00	0026 DRIVER,MOS CLOCK,2	1	E90
48	48		1912388-00	74S02 NOR GATE-QUAD 2IN,PO	3	E37,E52,E56
49	49		1912389-00	74S08 AND GATE-QUAD 2IN,PO	4	E11,E28,E39,E96
50	50		1912647-00	LS257 MUX 1 OF 2 (QUAD)	6	E83,E100,E106,E110,E113,E119
51	51		1912649-00	LS75 LATCH 4BIT,BISTABLE	1	E49
52	52		1912697-00	LS174 FF-D HEX W/CLEAR	3	E93,E107,E112
53	53		1912730-00	DC 003 INTERRUPT,2 CIRCUIT	2	E98,E104
54	54		1912746-00	DEC 74S37 NAND GATE-QUAD 2IN	1	E61
55	55		1912801-00	LS02 NOR-GATE-QUAD 2IN	1	E85
56	56		1912803-00	74LS04 INVERTER GATE,HEX	1	E89
57	57		1912804-00	LS05 INVERTER GATE-HEX 1I	2	E82,E87
58	58		1912805-00	LS08 AND GATE-QUAD 2IN,PO	1	E65
59	59		1912807-00	LS10 NAND GATE-TRIPLE 3IN	2	E25,E95
60	60		1912808-00	LS11 AND GATE-TRIPLE 3IN	1	E14
61	61		1912810-00	LS20 NAND GATE-DUAL 4IN	2	E53,E60
62	62		1912816-00	LS32 OR GATE-QUAD 2IN,POS	2	E120,E124
63	63		1912824-00	LS74 FF-D DUAL,EDGE TRIGG	4	E5,E80,E111,E64
64	64		1912846-00	LS155 DECODER,2 OF 4(DUAL)	3	E103,E109,E115
65	65		1912853-00	LS175 FF-D QUAD	1	E117
66	66		1912857-00	LS197 COUNTER,BINARY,PRESET	1	E105
67	67		1912858-00	LS221 ONE SHOT-DUAL,SCHMIT	1	E6
68	68		1912863-00	LS273 FF-D OCTAL W/CLEAR	1	E86
69	69		1912868-00	LS299 SHIFT REG. 8-BIT UNI	2	E92,E101
70	70		1913340-00	74S32 OR GATE-QUAD 2IN	4	E4,E44,E97,E116
71	71		1913462-00	74S240 OCTAL BUFFER,INVERTI	3	E42,E73,E79
72	72		1913671-00	74S374 FF-D OCTAL TRISTATE	1	E70
73	73		1913777-00	LS240 DRIVER,LINE,OCTAL,T	1	E94
74	74		1914085-00	74S260 NOR GATE-DUAL,POS	1	E23
75	75		1915218-00	LS245 TRANSCEIVER,BUS,OCT	2	E81,E84

D	I	G	I	T	A	L	TITLE	SECTION	SIZE	CODE	DOCUMENT NUMBER	REV
							KDF11-B CPU MODULE	A OF A	K	PL	M8189-0-DBP	A

LINE	ITEM	DOCUMENT NUMBER	PART NUMBER	DESCRIPTION	QTY PER VARIATION 00	REFERENCE DESIGNATOR
76	76		1915305-00	AM 2908 TRANSCEIVER,BUS,LATCH	6	E13,E34,E41,E48,E55,E69
77	77		1915415-00	9636 DRIVER,DUAL,EIA RS-	1	E118
78	78		1915416-00	9637 RECEIVER,DUAL,RS-42	1	E125
79	79		1916028-01	9643 DRIVER,TTL TO MOS,D	1	E67
80	80		1910532-00	74S00 NAND GATE-QUAD 2IN	6	E16,E18,E24,E31,E35,E54
81	81		1910534-00	74S04 INVERTER GATE-HEX 1I	4	E33,E58,E68,E99
82	82		1910535-00	74S05 INVERTER GATE-HEX 1	1	E57
83	83		1910536-00	74S10 NAND GATE-TRIPLE 3IN	1	E32
84	84		1910537-00	74S11 AND GATE-TRIPLE 3INP	1	E46
85	85		1910542-00	74S64 A-O-I GATE 4-2-3-2	1	E47
86	87		2112623-00	DUAL BAUD RATE GEN/PROG DIVIDER,	1	E121
87	88		2113937-01	6402-1 UART,UNIV.,ASYNCHRO	2	E128,E129
88	91		23061C6-00	C6-01	1	E88
89	92		5700000-01	DAT/CTL HYBRID ASSY W/FP,DCF11-A	1	E75
90	93		9009149-00	PIN, STAKING, P.C. BOARD, .025 X	44	J3-J46
91	94		9009185-00	JUMPER, WIRE, INSULATED, BLACK B	2	W1,W2
92	95		9000024-01	EYELET,ROLL FLANGE .1210DX .192	6	
93	96		9010213-01	SPACER,14 PIN BLK/NYL .060THK.	1	
94	97		1218783-00	CONN .100 2POS JUMPER	12	

D	I	G	I	T	A	L	TITLE KDF11-B CPU MODULE	SECTION A OF A	SIZE K	CODE PL	DOCUMENT NUMBER M8189-0-DBP	REV A

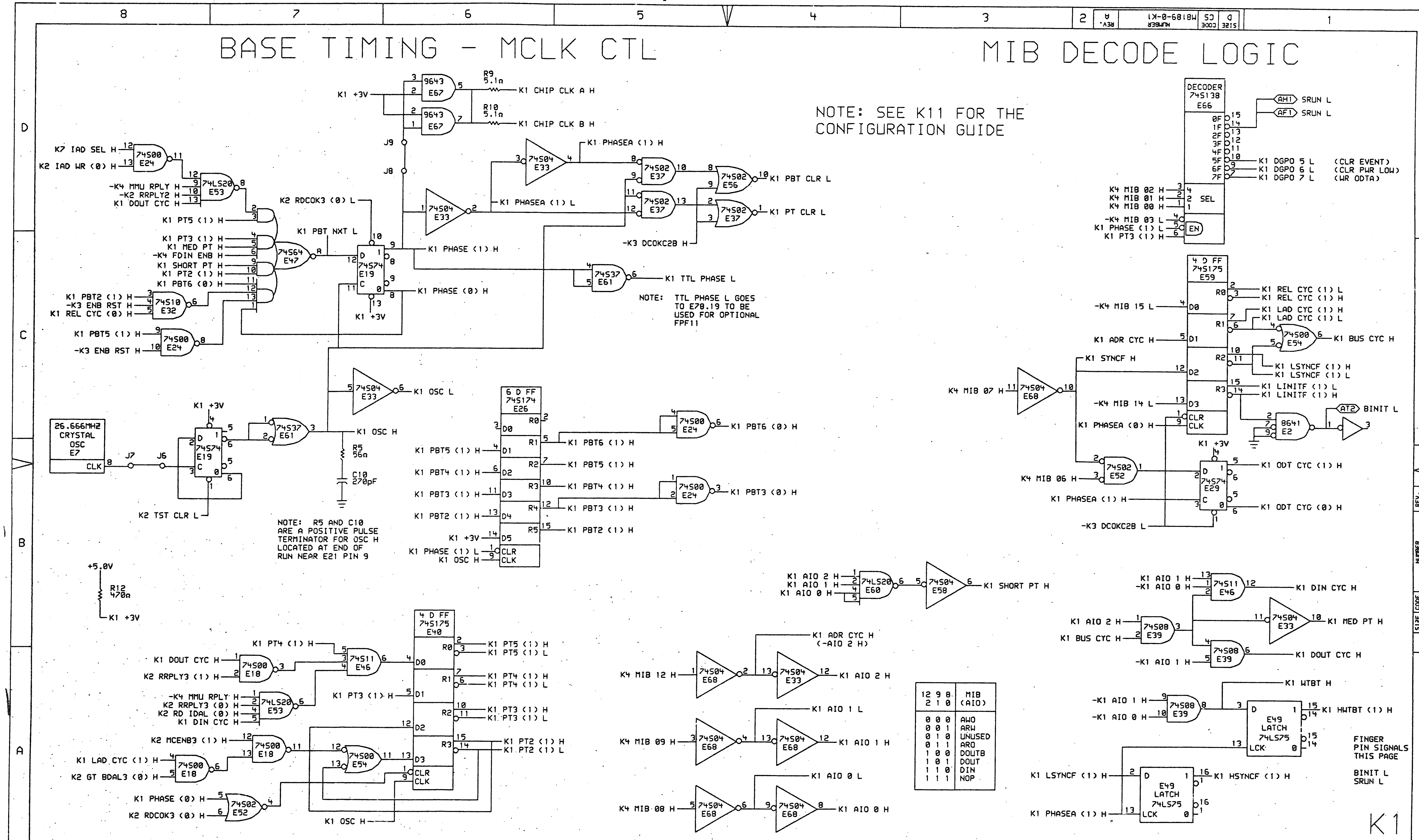

12 9 8 2 1 0	MIB (AIO)
0 0 0	AWO
0 0 1	ARW
0 1 0	UNUSED
0 1 1	ARO
1 0 0	DOUTB
1 0 1	DOUT
1 1 0	DIN
1 1 1	NOP

DRAWING 1 OF 11

TITLE: TIMING LOGIC & MIB DECODE

"THIS DRAWING AND SPECIFICATIONS, HEREIN, ARE THE PROPERTY OF DIGITAL EQUIPMENT CORPORATION AND SHALL NOT BE REPRODUCED OR COPIED OR USED IN WHOLE OR IN PART AS THE BASIS FOR THE MANUFACTURE OR SALE OF ITEMS WITHOUT WRITTEN PERMISSION. COPYRIGHT © 1981, DIGITAL EQUIPMENT CORPORATION"

REVISIONS		
CHK	CHANGE NO.	REV

digital

DRN. H Cullison DATE 05-MAR-81
CHK. H Cullison DATE 4-13-81
ENG. 4-13-81 DATE 4-7-81
BOARD LOCATION:
SHEET 1 OF 1
[365,3132]M81891.DRW 04-MAR-81 16:55
NEXT HIGHER ASSEMBLY: B-DD-M8189-0
FIRST USED ON OPTION/MODEL: KDF11-B

SIZE	CODE	NUMBER	REV.
D	CS	M8189-0-K1	A

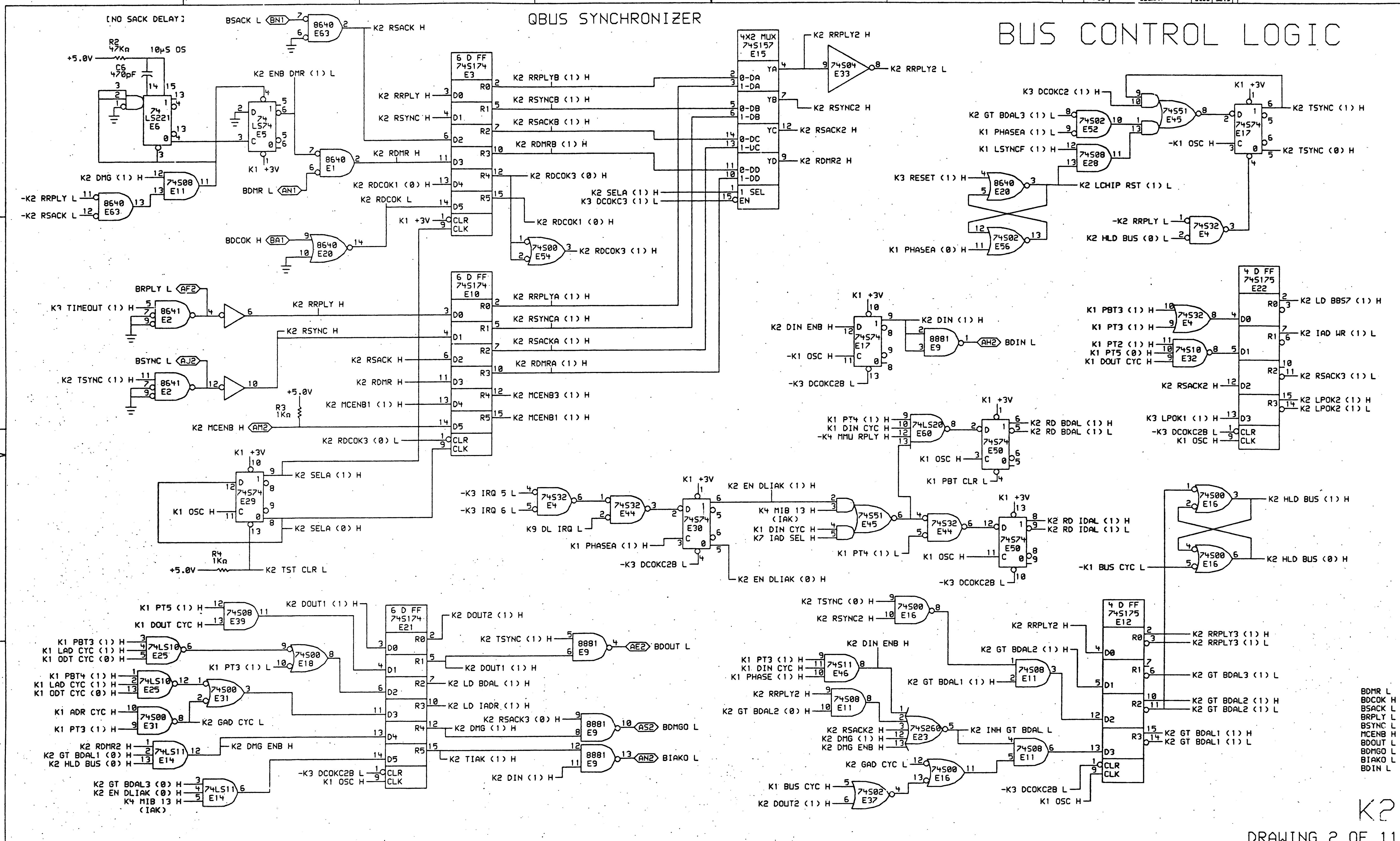

DRAWING 2 OF 11

"THIS DRAWING AND SPECIFICATIONS, HEREIN, ARE THE PROPERTY OF DIGITAL EQUIPMENT CORPORATION AND SHALL NOT BE REPRODUCED OR COPIED OR USED IN WHOLE OR IN PART AS THE BASIS FOR THE MANUFACTURE OR SALE OF ITEMS WITHOUT WRITTEN PERMISSION. COPYRIGHT © 1981, DIGITAL EQUIPMENT CORPORATION"

REVISIONS		
CHK	CHANGE NO.	REV

digital

DRN. H Cullison	DATE 05-MAR-81	ENG	DATE 4-10-81	TITLE: BUS CONTROL LOGIC
CHK'D H Cullison	DATE 4-13-81	BOARD LOCATION: SHEET 1 OF 1		
[365,3132]M81892.DRW	04-MAR-81 17:09	NEXT HIGHER ASSEMBLY:		SIZE D · CODE CS · NUMBER M8189-0-K2 · REV. A
FIRST USED ON OPTION/MODEL: KDF11-B		B-DD-M8189-0		

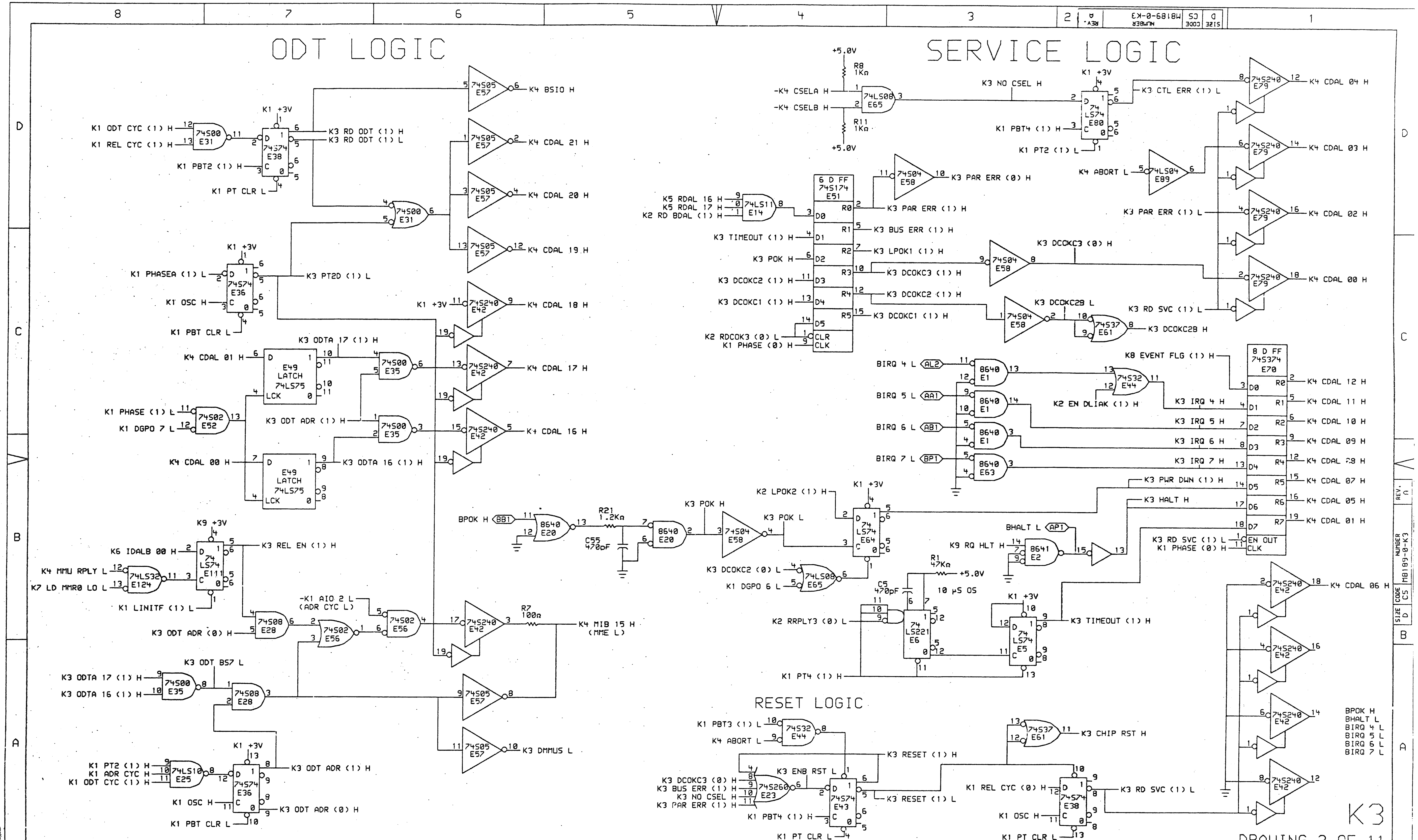

THIS DRAWING AND SPECIFICATIONS, HEREIN, ARE THE PROPERTY OF DIGITAL EQUIPMENT CORPORATION AND SHALL NOT BE REPRODUCED OR COPIED OR USED IN WHOLE OR IN PART AS THE BASIS FOR THE MANUFACTURE OR SALE OF ITEMS WITHOUT WRITTEN PERMISSION. COPYRIGHT © 1981, DIGITAL EQUIPMENT CORPORATION

REVISIONS		
CHK	CHANGE NO.	REV

digital

DRN. H Cullison	DATE 05-MAR-81	ENG. Charlie Valentine	DATE 4-2-81
CHK. P Cullison	DATE 4-17-81	BOARD LOCATION: SHEET 1 OF 1	
[365,3132]M81893.DRW	04-MAR-81 17:15	NEXT HIGHER ASSEMBLY:	
FIRST USED ON OPTION/MODEL: KDF11-B		B-DD-M8189-0	

TITLE: SERVICE, RESET & ODT LOGIC

SIZE	CODE	NUMBER	REV.
D	CS	M8189-0-K3	A

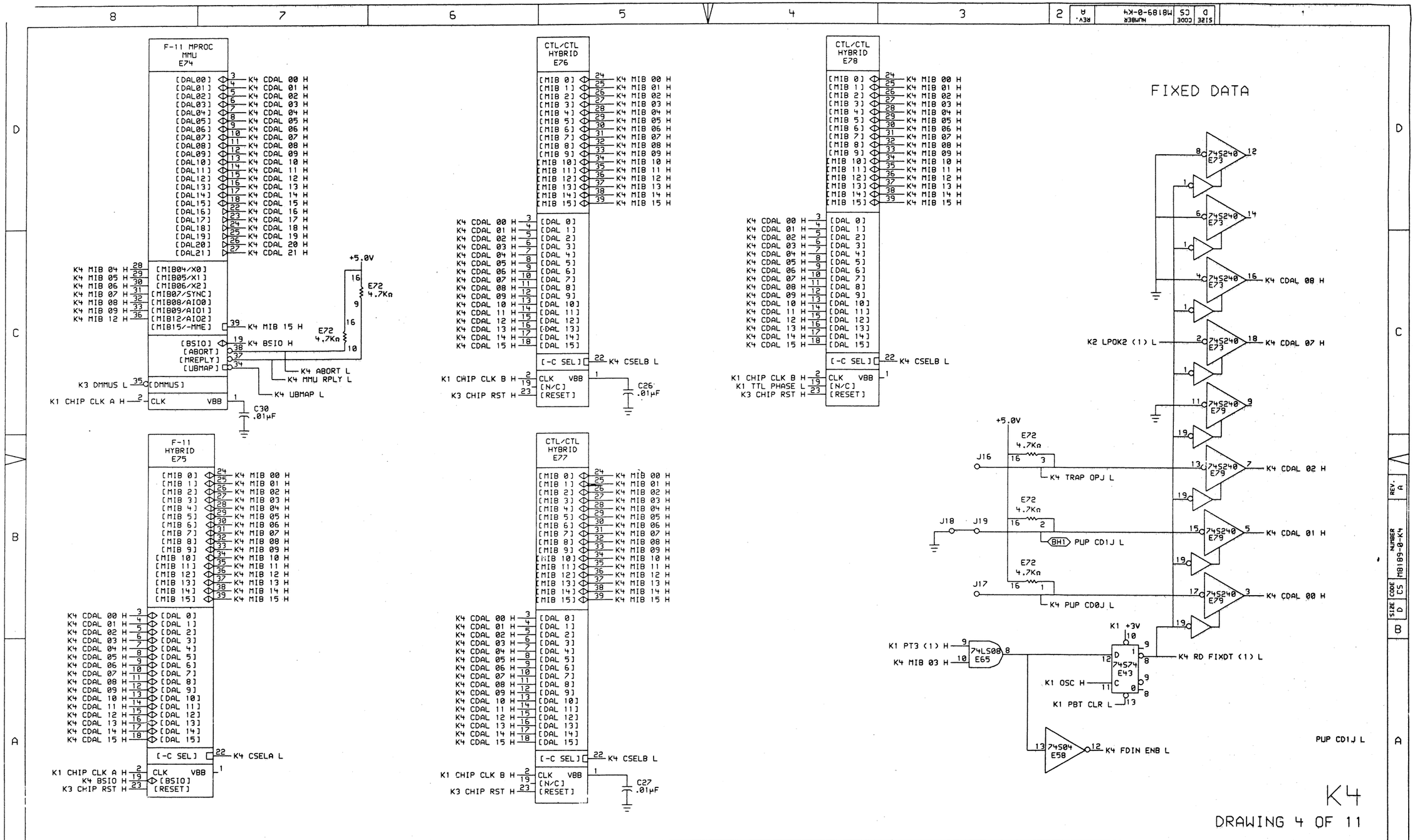

"THIS DRAWING AND SPECIFICATIONS, HEREIN, ARE THE PROPERTY OF DIGITAL EQUIPMENT CORPORATION AND SHALL NOT BE REPRODUCED OR COPIED OR USED IN WHOLE OR IN PART AS THE BASIS FOR THE MANUFACTURE OR SALE OF ITEMS WITHOUT WRITTEN PERMISSION. COPYRIGHT © 1981, DIGITAL EQUIPMENT CORPORATION"

REVISIONS		
CHK	CHANGE NO.	REV

digital

DRN. H. Guillegin — DATE 05-MAR-81
CHK D. H. Hanson — DATE 4-1-81
ENG Charles Vai — DATE 4-2-81
BOARD LOCATION:
SHEET 1 OF 1

[365,3132]M81894.DRW 05-MAR-81 08:59

FIRST USED ON OPTION/MODEL: KDF11-B

NEXT HIGHER ASSEMBLY: B-DD-M8189-0

TITLE: F11 CHIPS & FIXED DATA

SIZE	CODE	NUMBER	REV.
D	CS	M8189-0-K4	A

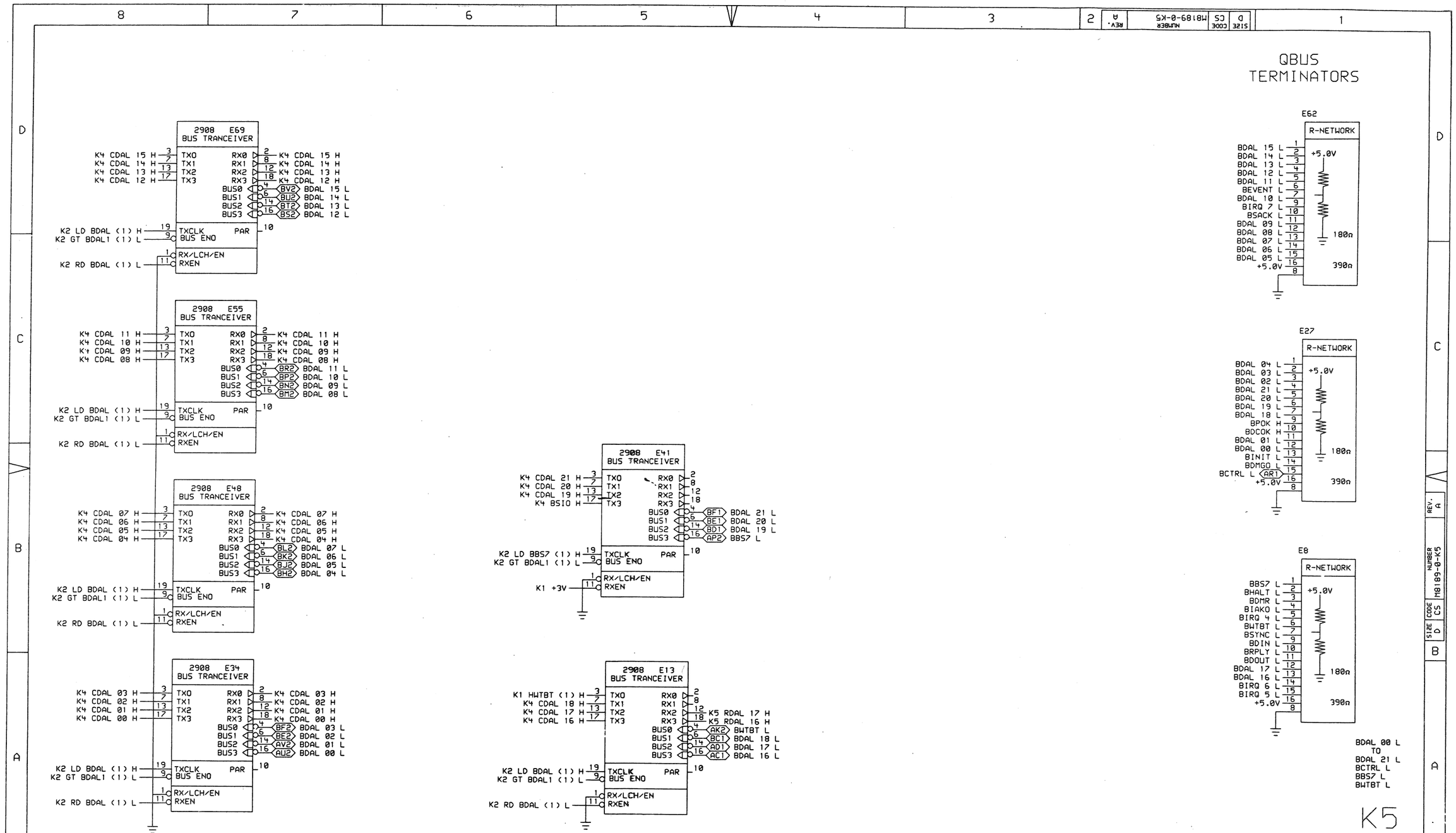
QBUS
TERMINATORS
2908 E69
BUS TRANCEIVER
K4 CDAL 15 H
K4 CDAL 14 H
K4 CDAL 13 H
K4 CDAL 12 H
TX0
TX1
TX2
TX3
RX0
RX1
RX2
RX3
BUS0
BUS1
BUS2
BUS3
BV2
BU2
BT2
BS2
BDAL 15 L
BDAL 14 L
BDAL 13 L
BDAL 12 L
K2 LD BDAL (1) H
K2 GT BDAL1 (1) L
TXCLK
BUS ENO
PAR
RX/LCH/EN
RXEN
K2 RD BDAL (1) L
2908 E55
BUS TRANCEIVER
K4 CDAL 11 H
K4 CDAL 10 H
K4 CDAL 09 H
K4 CDAL 08 H
BR2
BP2
BN2
BM2
BDAL 11 L
BDAL 10 L
BDAL 09 L
BDAL 08 L
2908 E48
BUS TRANCEIVER
K4 CDAL 07 H
K4 CDAL 06 H
K4 CDAL 05 H
K4 CDAL 04 H
BL2
BK2
BJ2
BH2
BDAL 07 L
BDAL 06 L
BDAL 05 L
BDAL 04 L
2908 E34
BUS TRANCEIVER
K4 CDAL 03 H
K4 CDAL 02 H
K4 CDAL 01 H
K4 CDAL 00 H
BF2
BE2
AV2
AU2
BDAL 03 L
BDAL 02 L
BDAL 01 L
BDAL 00 L
2908 E41
BUS TRANCEIVER
K4 CDAL 21 H
K4 CDAL 20 H
K4 CDAL 19 H
K4 BSIO H
BF1
BE1
BD1
AP2
BDAL 21 L
BDAL 20 L
BDAL 19 L
BBS7 L
K2 LD BBS7 (1) H
K2 GT BDAL1 (1) L
K1 +3V
2908 E13
BUS TRANCEIVER
K1 HWTBT (1) H
K4 CDAL 18 H
K4 CDAL 17 H
K4 CDAL 16 H
K5 RDAL 17 H
K5 RDAL 16 H
AK2
BC1
AD1
AC1
BWTBT L
BDAL 18 L
BDAL 17 L
BDAL 16 L
E62
R-NETWORK
BDAL 15 L
BDAL 14 L
BDAL 13 L
BDAL 12 L
BDAL 11 L
BEVENT L
BDAL 10 L
BIRQ 7 L
BSACK L
BDAL 09 L
BDAL 08 L
BDAL 07 L
BDAL 06 L
BDAL 05 L
+5.0V
180Ω
390Ω
E27
R-NETWORK
BDAL 04 L
BDAL 03 L
BDAL 02 L
BDAL 21 L
BDAL 20 L
BDAL 19 L
BDAL 18 L
BPOK H
BDCOK H
BDAL 01 L
BDAL 00 L
BINIT L
BDMGO L
BCTRL L
AR1
E8
R-NETWORK
BBS7 L
BHALT L
BDMR L
BIAKO L
BIRQ 4 L
BWTBT L
BSYNC L
BDIN L
BRPLY L
BDOUT L
BDAL 17 L
BDAL 16 L
BIRQ 6 L
BIRQ 5 L
BDAL 00 L
TO
BDAL 21 L
BCTRL L
BBS7 L
BWTBT L
K5
DRAWING 5 OF 11
"THIS DRAWING AND SPECIFICATIONS, HEREIN, ARE THE PROPERTY OF DIGITAL EQUIPMENT CORPORATION AND SHALL NOT BE REPRODUCED OR COPIED OR USED IN WHOLE OR IN PART AS THE BASIS FOR THE MANUFACTURE OR SALE OF ITEMS WITHOUT WRITTEN PERMISSION. COPYRIGHT © 1981, DIGITAL EQUIPMENT CORPORATION"
REVISIONS
CHK
CHANGE NO.
REV
digital
DRN.
DATE 05-MAR-81
ENG.
DATE 4-7-81
CHK.
DATE 4-13-81
BOARD LOCATION:
SHEET 1 OF 1
[365,3132]M8189S.DRW 05-MAR-81 09:26
NEXT HIGHER ASSEMBLY:
FIRST USED ON OPTION/MODEL: KDF11-B
B-DD-M8189-0
TITLE:
CDAL/BDAL
INTERFACE
SIZE D
CODE CS
NUMBER M8189-0-K5
REV. A

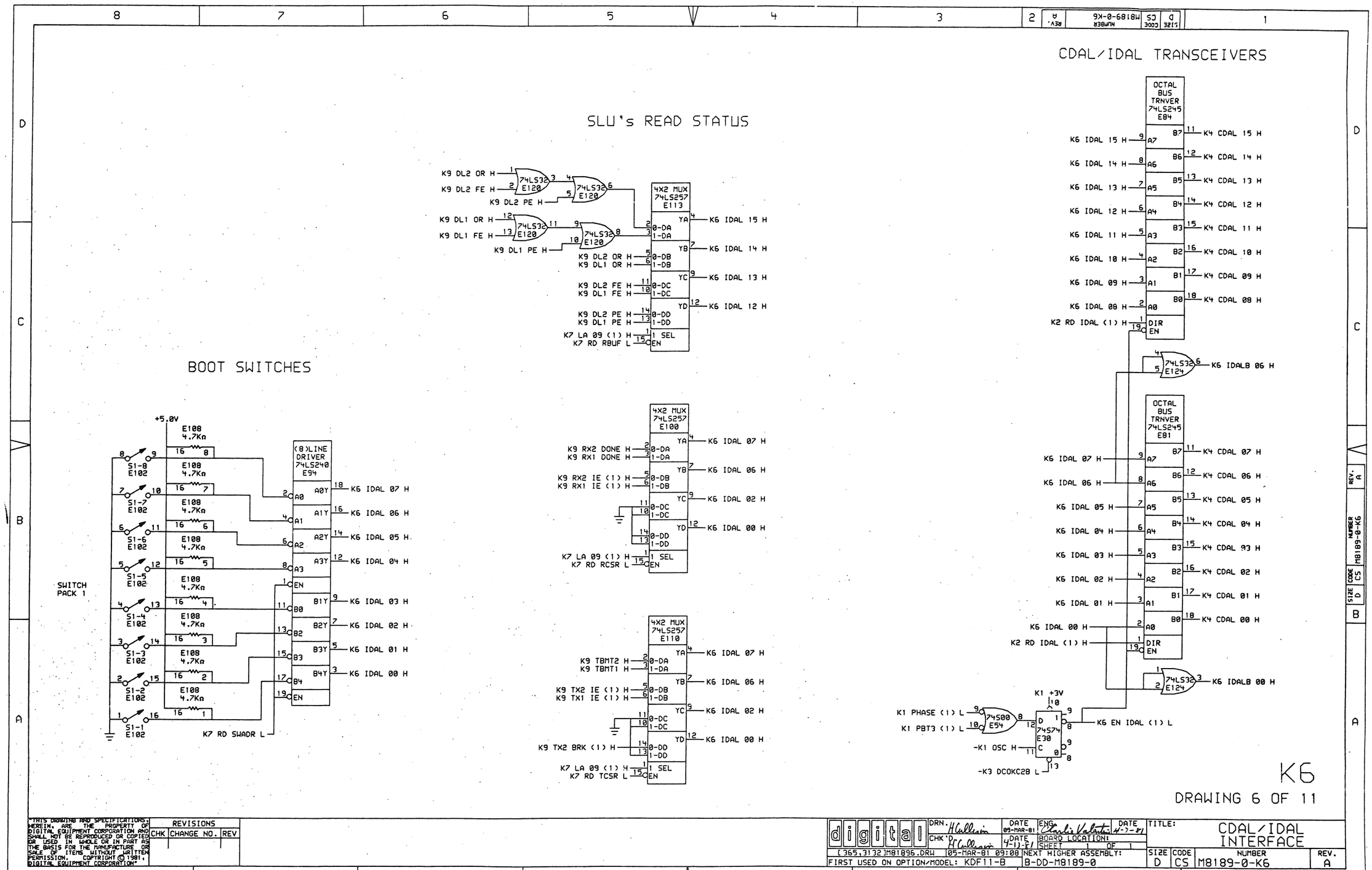
SLU's READ STATUS
K9 DL2 OR H
K9 DL2 FE H
K9 DL2 PE H
K9 DL1 OR H
K9 DL1 FE H
K9 DL1 PE H
74LS32 E120
4X2 MUX 74LS257 E113
0-DA
1-DA
0-DB
1-DB
0-DC
1-DC
0-DD
1-DD
1 SEL
EN
YA
YB
YC
YD
K6 IDAL 15 H
K6 IDAL 14 H
K6 IDAL 13 H
K6 IDAL 12 H
K7 LA 09 (1) H
K7 RD RBUF L
BOOT SWITCHES
+5.0V
E108 4.7Kn
S1-8 E102
S1-7 E102
S1-6 E102
S1-5 E102
S1-4 E102
S1-3 E102
S1-2 E102
S1-1 E102
SWITCH PACK 1
(8)LINE DRIVER 74LS240 E94
A0Y
A1Y
A2Y
A3Y
B1Y
B2Y
B3Y
B4Y
K6 IDAL 07 H
K6 IDAL 06 H
K6 IDAL 05 H
K6 IDAL 04 H
K6 IDAL 03 H
K6 IDAL 02 H
K6 IDAL 01 H
K6 IDAL 00 H
K7 RD SWADR L
4X2 MUX 74LS257 E100
K9 RX2 DONE H
K9 RX1 DONE H
K9 RX2 IE (1) H
K9 RX1 IE (1) H
K6 IDAL 07 H
K6 IDAL 06 H
K6 IDAL 02 H
K6 IDAL 00 H
4X2 MUX 74LS257 E110
K9 TBMT2 H
K9 TBMT1 H
K9 TX2 IE (1) H
K9 TX1 IE (1) H
K9 TX2 BRK (1) H
K7 RD TCSR L
CDAL/IDAL TRANSCEIVERS
OCTAL BUS TRNVER 74LS245 E84
K6 IDAL 15 H
K6 IDAL 14 H
K6 IDAL 13 H
K6 IDAL 12 H
K6 IDAL 11 H
K6 IDAL 10 H
K6 IDAL 09 H
K6 IDAL 08 H
K2 RD IDAL (1) H
DIR
EN
K4 CDAL 15 H
K4 CDAL 14 H
K4 CDAL 13 H
K4 CDAL 12 H
K4 CDAL 11 H
K4 CDAL 10 H
K4 CDAL 09 H
K4 CDAL 08 H
74LS32 E124
K6 IDALB 06 H
OCTAL BUS TRNVER 74LS245 E81
K6 IDAL 07 H
K6 IDAL 06 H
K6 IDAL 05 H
K6 IDAL 04 H
K6 IDAL 03 H
K6 IDAL 02 H
K6 IDAL 01 H
K6 IDAL 00 H
K2 RD IDAL (1) H
K4 CDAL 07 H
K4 CDAL 06 H
K4 CDAL 05 H
K4 CDAL 04 H
K4 CDAL 93 H
K4 CDAL 02 H
K4 CDAL 01 H
K4 CDAL 00 H
K6 IDALB 00 H
K1 +3V
K1 PHASE (1) L
K1 PBT3 (1) L
74S00 E54
74S74 E30
-K1 OSC H
-K3 DCOKC28 L
K6 EN IDAL (1) L
K6
DRAWING 6 OF 11
"THIS DRAWING AND SPECIFICATIONS, HEREIN, ARE THE PROPERTY OF DIGITAL EQUIPMENT CORPORATION AND SHALL NOT BE REPRODUCED OR COPIED OR USED IN WHOLE OR IN PART AS THE BASIS FOR THE MANUFACTURE OR SALE OF ITEMS WITHOUT WRITTEN PERMISSION. COPYRIGHT © 1981, DIGITAL EQUIPMENT CORPORATION"
REVISIONS
CHK
CHANGE NO.
REV
digital
DRN. H Cullison
DATE 05-MAR-81
ENG. Charles Valentine
DATE 4-7-81
CHK H Cullison
DATE 4-13-81
BOARD LOCATION:
SHEET 1 OF 1
(365,3132)M8189G.DRW 05-MAR-81 09:08
NEXT HIGHER ASSEMBLY:
FIRST USED ON OPTION/MODEL: KDF11-B
B-DD-M8189-0
TITLE: CDAL/IDAL INTERFACE
SIZE D
CODE CS
NUMBER M8189-0-K6
REV. A

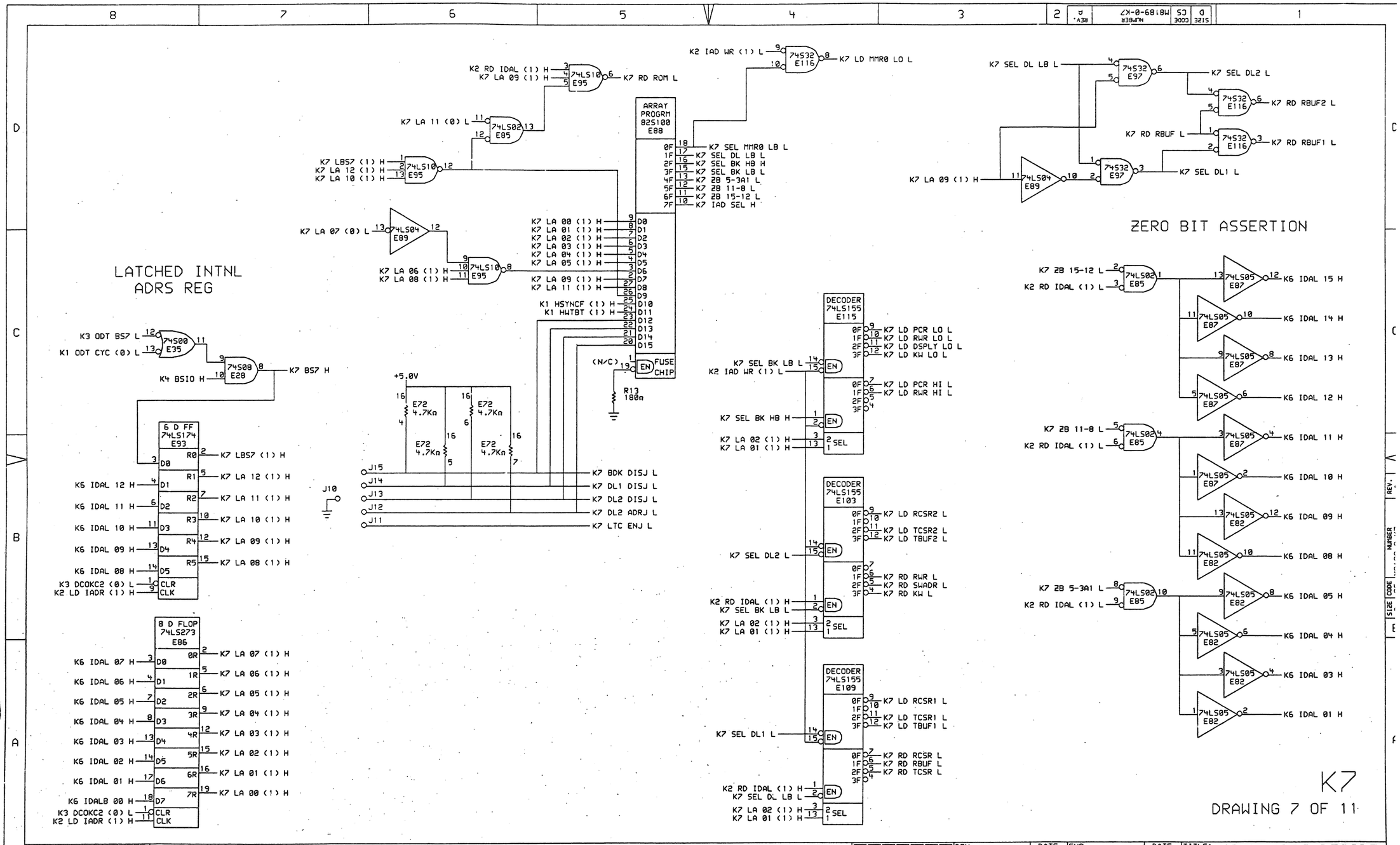

"THIS DRAWING AND SPECIFICATIONS, HEREIN, ARE THE PROPERTY OF DIGITAL EQUIPMENT CORPORATION AND SHALL NOT BE REPRODUCED OR COPIED OR USED IN WHOLE OR IN PART AS THE BASIS FOR THE MANUFACTURE OR SALE OF ITEMS WITHOUT WRITTEN PERMISSION. COPYRIGHT © 1981, DIGITAL EQUIPMENT CORPORATION"

REVISIONS		
CHK	CHANGE NO.	REV

digital

DRN. H Cullison — DATE 05-MAR-81 — ENG. — DATE
CHK'D. H Cullison — DATE 4-13-81 — BOARD LOCATION: — SHEET 1 OF 1

[365,3132]M81897.DRW 05-MAR-81 09:10 — NEXT HIGHER ASSEMBLY:

FIRST USED ON OPTION/MODEL: KDF11-B — B-DD-M8189-0

TITLE: IDAL ADRS DECODE

SIZE	CODE	NUMBER	REV.
D	CS	M8189-0-K7	A

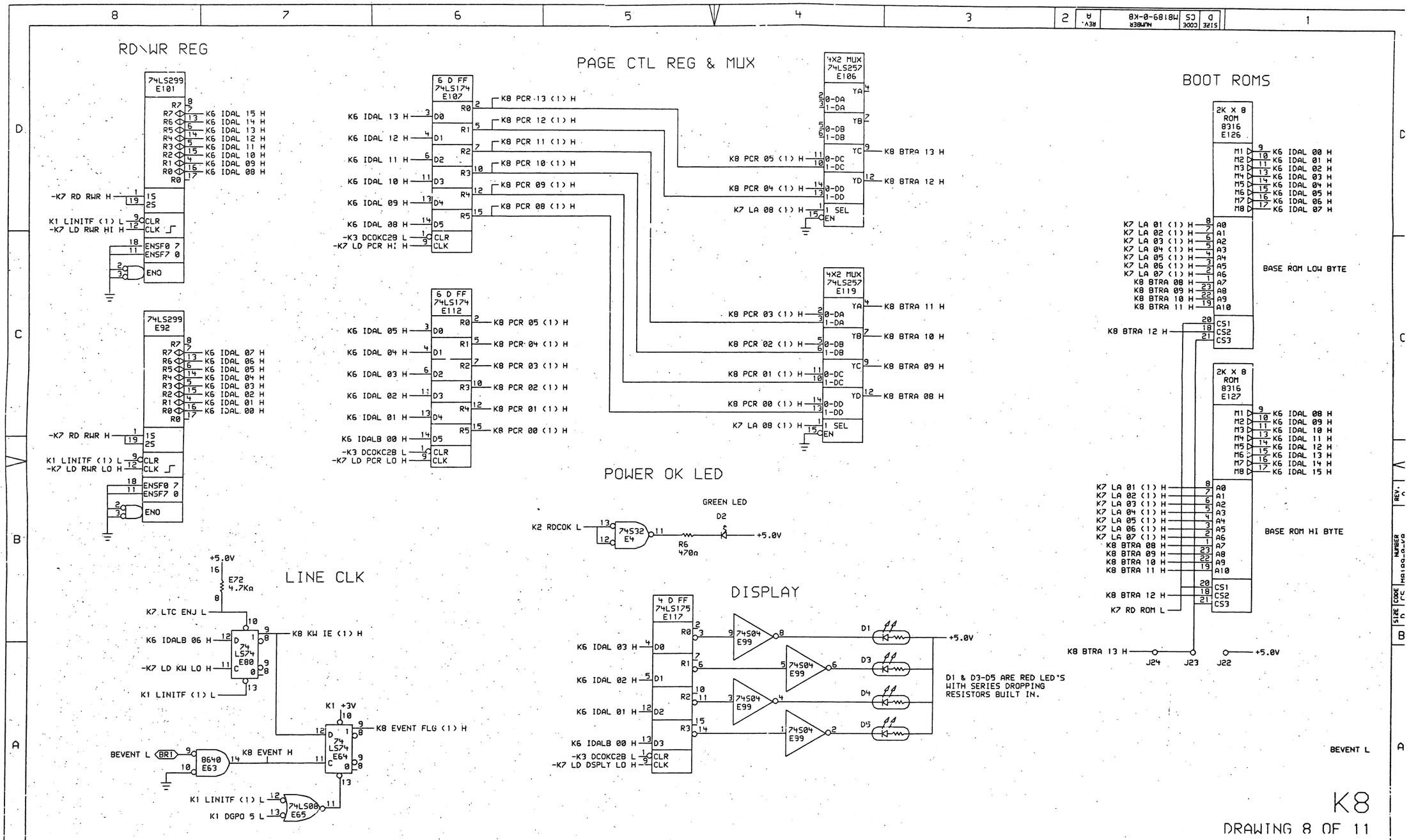

K8

DRAWING 8 OF 11

"THIS DRAWING AND SPECIFICATIONS, HEREIN, ARE THE PROPERTY OF DIGITAL EQUIPMENT CORPORATION AND SHALL NOT BE REPRODUCED OR COPIED OR USED IN WHOLE OR IN PART AS THE BASIS FOR THE MANUFACTURE OR SALE OF ITEMS WITHOUT WRITTEN PERMISSION. COPYRIGHT © 1981, DIGITAL EQUIPMENT CORPORATION"

REVISIONS		
CHK	CHANGE NO.	REV

DRN. H Cullison	DATE 03-APR-81	ENG.	DATE 4-10-81
CHK'D. H Cullison	DATE 4-17-81	BOARD LOCATION: SHEET 1 OF 1	
[365,3132]M81898.DRW 02-APR-81 07:52		NEXT HIGHER ASSEMBLY:	
FIRST USED ON OPTION/MODEL: KDF11-B		B-DD-M8189-0	

TITLE: BOOT & CLOCK LOGIC

SIZE	CODE	NUMBER	REV.
D	CS	M8189-0-K8	A

INTERSIL IM6402-1 IPL

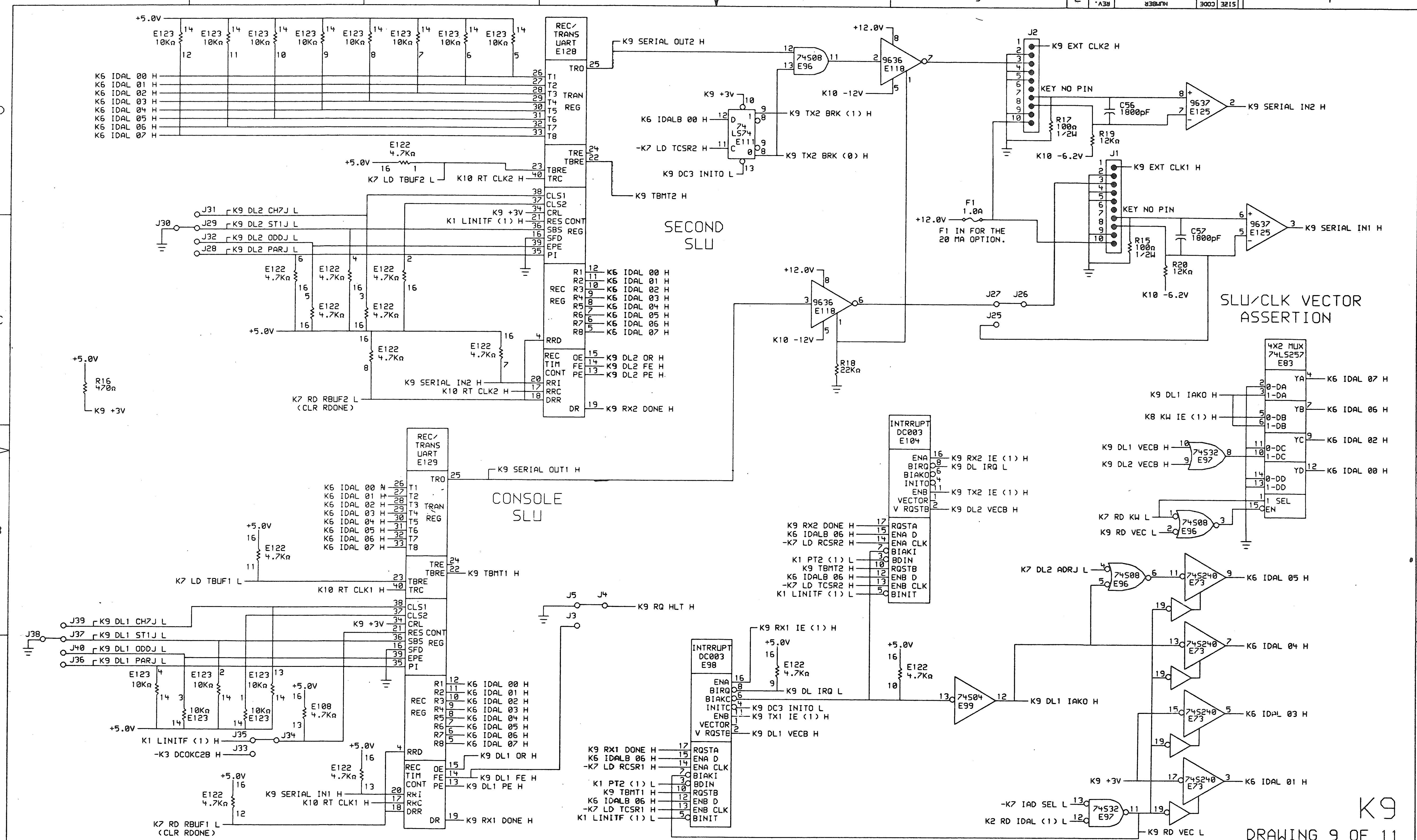

THIS DRAWING AND SPECIFICATIONS, HEREIN, ARE THE PROPERTY OF DIGITAL EQUIPMENT CORPORATION AND SHALL NOT BE REPRODUCED OR COPIED OR USED IN WHOLE OR IN PART AS THE BASIS FOR THE MANUFACTURE OR SALE OF ITEMS WITHOUT WRITTEN PERMISSION. COPYRIGHT © 1981, DIGITAL EQUIPMENT CORPORATION

REVISIONS		
CHK	CHANGE NO.	REV

digital

DRN. H Cullison	DATE 05-MAR-81	ENG. Charles ...	DATE 4-7-...
CHK. H Cullison	DATE 4-13-81	BOARD LOCATION:	SHEET 1 OF 1
(365,3132)M81899.DRW	05-MAR-81 08:04	NEXT HIGHER ASSEMBLY: B-DD-M8189-0	
FIRST USED ON OPTION/MODEL: KDF11-B			

TITLE: CONSOLE & SECOND SLU

SIZE	CODE	NUMBER	REV.
D	CS	M8189-0-K9	A

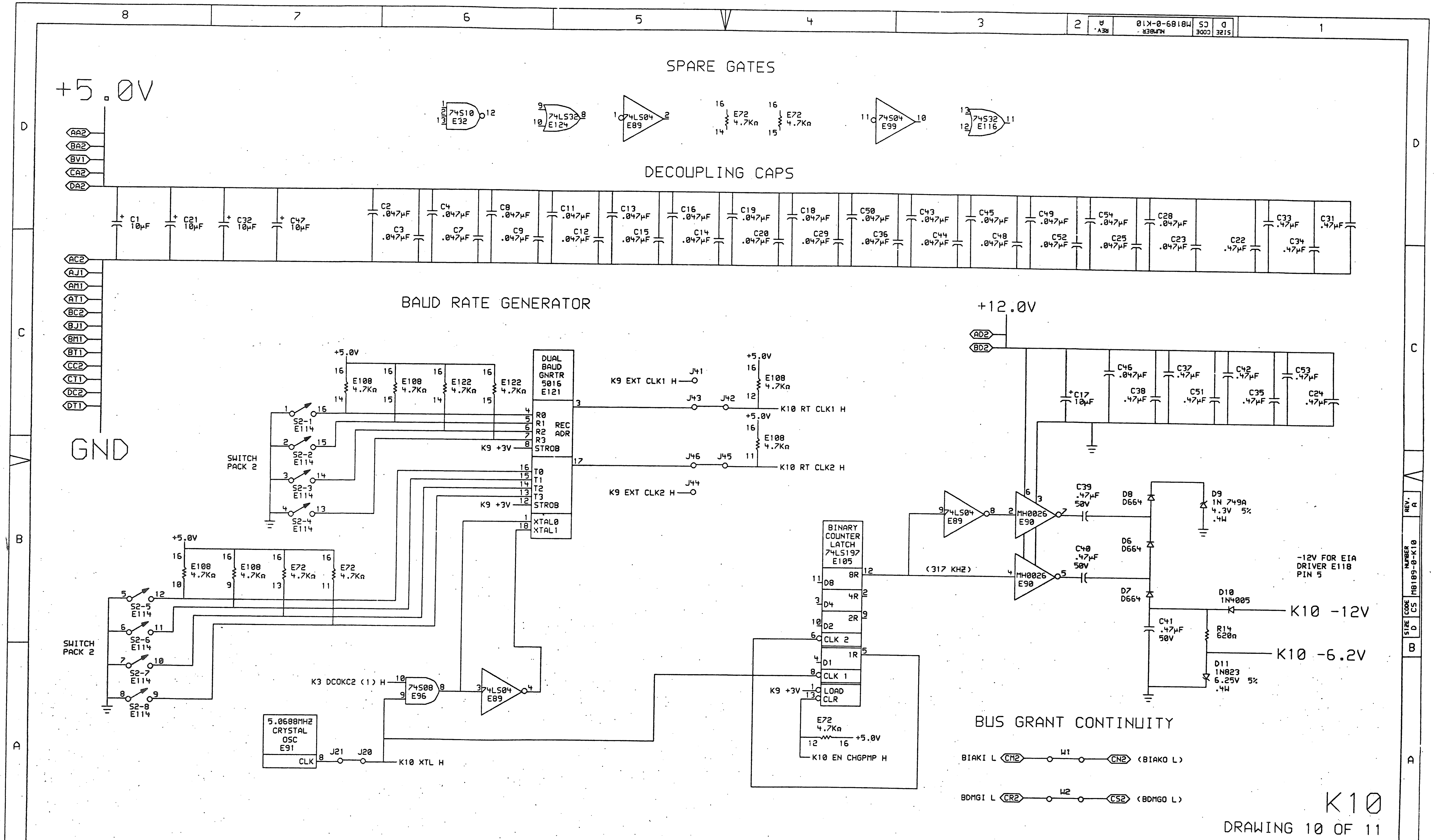

"THIS DRAWING AND SPECIFICATIONS, HEREIN, ARE THE PROPERTY OF DIGITAL EQUIPMENT CORPORATION AND SHALL NOT BE REPRODUCED OR COPIED OR USED IN WHOLE OR IN PART AS THE BASIS FOR THE MANUFACTURE OR SALE OF ITEMS WITHOUT WRITTEN PERMISSION. COPYRIGHT © 1981, DIGITAL EQUIPMENT CORPORATION"

REVISIONS

digital

[365,3132]M81890.DRW 05-MAR-81 08:08

FIRST USED ON OPTION/MODEL: KDF11-B

NEXT HIGHER ASSEMBLY: B-DD-M8189-0

TITLE: BAUD RATE & -12V

SIZE D CODE CS NUMBER M8189-0-K10 REV. A

CONNECT

J46 TO J45 2ND SLU BAUD RATE SELECTED BY SW. PACK 2 S5-S8 (E114)
J44 TO J45 2ND SLU BAUD RATE DETERMINED BY EXTERNAL SOURCE ON J2 PIN 1
J43 TO J42 CONSOLE BAUD RATE SELECTED BY SW. PACK 2 S1-S4 (E114)
J41 TO J42 CONSOLE BAUD RATE DETERMINED BY EXTERNAL SOURCE ON J1 PIN 1

NOTE: BRG = BAUD RATE GENERATOR

EXT. CLK SOURCE FOR CONSOLE UART
CLOCK INPUT TO CONSOLE UART
CONSOLE BRG OUTPUT
EXT. CLK SOURCE FOR 2ND SLU UART
CLOCK INPUT TO 2ND SLU UART
2ND SLU BRG OUTPUT

J1 J2

PINNING FOR J1 & J2 VIEW LOOKING AT MODULE FROM THE HANDLE END

SIDE 1 (COMPONENT SIDE)
SIDE 2

NOTE: PIN 6 ON J1 & J2 IS A KEYING PIN (NO PIN)

GREEN DC POWER OK LED
C4 = DC OK = BDCOK H (BA1) = H
OFF = DC NOT OK

BAUD RATE SELECT

				BAUD RATE
0	0	0	0	50
0	0	0	1	75
0	0	1	0	110
0	0	1	1	134.5
0	1	0	0	150
0	1	0	1	300
0	1	1	0	600
0	1	1	1	1200
1	0	0	0	1800
1	0	0	1	2000
1	0	1	0	2400
1	0	1	1	3600
1	1	0	0	4800
1	1	0	1	7200
1	1	1	0	9600
1	1	1	1	19,200
SW# S4	S3	S2	S1	CONSOLE (J1)
SW# S8	S7	S6	S5	2ND SLU (J2)

0 = ON
1 = OFF

BAUD RATE SELECTION TABLE. SET SWITCHES ON E114 ACCORDING TO TABLE ABOVE.

J J J J J J
4 4 4 4 4 4
6 5 4 3 2 1

2ND SLU J2 — 1ST SLU CONSOLE J1

CONSOLE UART CONFIGURATION J36-J40

GROUND TO SELECT ODD PARITY, OTHERWISE EVEN PARITY. J40
GROUND TO SELECT 7 BIT CHARACTERS, OTHERWISE 8 BIT. J39
GROUND SOURCE J38
GROUND FOR 1 STOP BIT, OTHERWISE 2. J37
GROUND TO ENABLE PARITY, OTHERWISE DISABLE. J36

SIGNAL OUTPUT K1 LINITF (1) H J35
INPUT TO CONSOLE UART RESET E129.21 J34
SIGNAL OUTPUT -K3 DCOKC28 H J33

J34 CONNECTED TO J35 FOR NORMAL OPERATION, J33 NOT CONNECTED.
J34 CONNECTED TO J33 FOR MANUFACTURING APT TEST ONLY.
J35 NOT CONNECTED.

J27 OUTPUT OF CONSOLE SLU DRIVER
J26 CONSOLE CONNECTOR SLU OUTPUT LINE
J25 CONSOLE SLU INPUT LINE

CONNECT J26 TO J27 FOR NORMAL OPERATION J25 NOT CONNECTED

CONNECT J26 TO J25 FOR FIELD SERVICE WRAP AROUND TESTING J27 NOT CONNECTED. THIS ALLOWS A TERMINAL AND ITS CABLE TO BE CHECKED OUT IN LINE MODE WITHOUT THE CPU RUNNING.

BAUD RATE GEN. CRYSTAL OSC. OUTPUT 5.0688 MHZ
INPUT TO BAUD RATE GENERATOR
J21
J20

OPTIONAL SOCKET E78 — NOTE: FPF11 MUST PLUG INTO THIS SOCKET IF USED.

OPTIONAL SOCKET E77

OPTIONAL SOCKET E76

DAT/CTL HYBRID E75

MMU E74

J9
J8
INPUT TO MOS CLOCK DRIVER
OUTPUT K1 PHASE (1) H

D D D D D
5 4 3 2 1
LSD MSD
BITS 0 1 2 3

D1,D3,D4 & D5 ARE THE DISPLAY REGISTER INDICATORS
DISPLAY REGISTER ADDRESS = 777524 WRITE ONLY
WRITE A 1 TO TURN OFF A LED
WRITE A 0 TO TURN ON A LED
POWER FAIL OR RESTART (BDCOK H=L) CLEARS THE REGISTER WHICH TURNS ON ALL 4 LEDS
BITS 15-03 ARE IGNORED

J7 — BASE TIMING CRYSTAL OSC. OUTPUT 26.666 MHZ
J6 — INPUT TO BASE TIMING CIRCUIT

2ND SLU UART CONFIGURATION J28-J32

GROUND TO SELECT ODD PARITY, OTHERWISE EVEN PARITY. J32
GROUND TO SELECT 7 BIT CHARACTERS, OTHERWISE 8 BIT. J31
GROUND SOURCE J30
GROUND FOR 1 STOP BIT, OTHERWISE 2. J29
GROUND TO ENABLE PARITY, OTHERWISE DISABLE. J28

NOTE: E75 AND E78 DO NOT HAVE A .01 UFD CAP CONNECTED TO PIN 1 FOR VBB LIKE E74,E76 AND E77. THEREFORE YOU CAN NOT INSTALL DEVICES WHICH REQUIRE THIS CAP. ONLY HYBRID ASSEMBLIES WITH INTEGRAL VBB CAPS MAY BE INSTALLED IN E75 AND E78.

SWITCH PACK 2 (E114) SELECTS BAUD RATE

SWITCH PACK 2: S1 S2 S3 S4 S5 S6 S7 S8 — E114
SWITCH PACK 1: S1 S2 S3 S4 S5 S6 S7 S8 — E102

INTERNAL DEVICE ADDRESSES

	ADDRESS	VECTOR
CONSOLE		
RCSR (RECEIVE CSR)	777560	60
RBUF (RECEIVE BUFFER)	777562	
XCSR (TRANSMIT CSR)	777564	64
XBUF (TRANSMIT BUFFER)	777566	
2ND SLU STANDARD ADDRESS J12 NO CONNECTION (H)		
RCSR (RECEIVE CSR)	776500	300
RBUF (RECEIVE BUFFER)	776502	
XCSR (TRANSMIT CSR)	776504	304
XBUF (TRANSMIT BUFFER)	776506	
2ND SLU ALTERNATE ADDRESS J12 GROUNDED (L)		
RCSR (RECEIVE CSR)	776540	340
RBUF (RECEIVE BUFFER)	776542	
XCSR (TRANSMIT CSR)	776544	344
XBUF (TRANSMIT BUFFER)	776546	

BOOT/DIAGNOSTIC REGISTERS				
PAGE CONTROL REGISTER	777520		WO	12 BITS 0-5 & 8-13
READ-WRITE MAINTENANCE REG.	777522		R/W	16 BITS
CONFIGURATION REGISTER	777524		RO	8 BITS 0-7
DISPLAY REGISTER	777524		WO	4 BITS 0-3
BEVENT CSR	777546	100	R/W	1 BIT 6
ROM MEMORY ADDRESSES	773000-773777			
LOW BYTE PCR CONTROLS	773000-773377			
HIGH BYTE PCR CONTROLS	773400-773777			

NOTE: THE INTERNAL DEVICES ARE ADDRESSABLE ONLY BY THE CPU ON THE INTERNAL BUS. THIS INCLUDES ALL MEMORY MANAGEMENT AND FLOATING POINT REGISTERS. I.E. YOU CANNOT DO A DMA TRANSFER FROM ANY EXTERNAL OPTION TO ANY OF THE INTERNAL DEVICES.

ROM/EPROM SOCKET HIGH BYTE 08-15 E127

ROM/EPROM SOCKET LOW BYTE 00-07 E126

CONFIGURATION REGISTER SWITCH PACK 1 (E102)
8 BITS READ ONLY ADDRESS 777524
BITS 15-08 ALWAYS READ AS 0

SWITCH #	S8	S7	S6	S5	S4	S3	S2	S1
DATA BIT	07	06	05	04	03	02	01	00

SWITCH ON = 1
SWITCH OFF = 0

POWER UP MODE SELECTION

MODE	NAME	J19	J17
0	PC @24,PS @26	N/C	N/C
1	CONSOLE ODT	N/C	GND
2	BOOTSTRAP 773000	GND	N/C
3	EXTENDED MICROCODE JUMP TO CONTROL CHIP #37	GND	GND

CONNECT J5 TO J4 FOR NORMAL OPERATION. J3 NOT CONNECTED. FRAMING ERROR (BREAK) FROM CONSOLE IGNORED.

CONNECT J3 TO J4 TO HALT CPU IF BREAK RECEIVED FROM CONSOLE. J5 NOT CONNECTED

J5 GROUND
J4 INPUT K9 RQ HLT H
J3 OUTPUT K9 DL1 FE H

OUTPUT K8 BTRA 13 H
INPUT PIN 21 TO E126 & E127
+5.0V
J J J
2 2 2
4 3 2

BUS GRANT CONTINUITY JUMPERS
W2 W1
W1 BIAKO/I
W2 BDMGO/I
W1 & W2 MUST BE INSTALLED WHEN USING A Q/Q BACKPLANE

WHEN MASKED ROM'S ARE USED CONNECT J24 TO J23, J22 NOT CONNECTED

WHEN EPROM'S ARE USED CONNECT J22 TO J23, J24 NOT CONNECTED

J19 SEE POWER UP MODE TABLE ABOVE. PUP CD1J L
J18 GROUND SOURCE
J17 SEE POWER UP MODE TABLE ABOVE. PUP CD0J L
J16 GROUND TO TRAP TO LOC. 10 IF HALT EXECUTED IN KERNEL MODE. OTHERWISE HALT AND ENTER CONSOLE ODT.
J15 GROUND TO DISABLE BOOT/DIAG. ROM & CLOCK LOGIC
J14 GROUND TO DISABLE SLU #1 (CONSOLE)
J13 GROUND TO DISABLE SLU #2
J12 GROUND TO SET SLU #2 REGISTER ADD'S TO 776540/340 OTHERWISE 776500/300
J11 GROUND TO SET THE LINE CLK INTERRUPT ENABLE F/F (BEVENT ALWAYS ENABLED), OTHERWISE BIT 6 OF CSR (777546) CONTROLS F/F.
J10 GROUND SOURCE

BIT 6 = 1 BEVENT ENABLED IF PSW PRIORITY < 6
BIT 6 = 0 BEVENT DISABLED
BEVENT VECTOR = 100

NOTE: IF BDV11 IS USED WITH KDF11-B AND BDV11 CONTROLS BEVENT, THEN J15 AND J11 MUST BE GROUNDED.

IF BDV11 IS USED WITH KDF11-B AND BEVENT IS TO BE IGNORED THEN J15 MUST BE GROUNDED BUT NOT J11.

K11
DRAWING 11 OF 11

THIS DRAWING AND SPECIFICATIONS, HEREIN, ARE THE PROPERTY OF DIGITAL EQUIPMENT CORPORATION AND SHALL NOT BE REPRODUCED OR COPIED OR USED IN WHOLE OR IN PART AS THE BASIS FOR THE MANUFACTURE OR SALE OF ITEMS WITHOUT WRITTEN PERMISSION. COPYRIGHT © 1981, DIGITAL EQUIPMENT CORPORATION

REVISIONS — CHK | CHANGE NO. | REV

digital — DRN. H Cullison DATE 05-MAR-81 — CHK'D H Cullison DATE 4-13-81 — ENG. Charlie Valente DATE 4-3-81
BOARD LOCATION: SHEET 1 OF 1
[365,3132]M8189A.DRW 05-MAR-81 08:42 NEXT HIGHER ASSEMBLY:
FIRST USED ON OPTION/MODEL: KDF11-B B-DD-M8189-0

TITLE: CONFIGURATION GUIDE
SIZE D CODE CS NUMBER M8189-0-K11 REV. A

"THE MATERIAL HEREIN IS FOR INFORMATION PURPOSES ONLY AND IS SUBJECT TO CHANGE WITHOUT NOTICE. DIGITAL EQUIPMENT CORPORATION ASSUMES NO RESPONSIBILITY FOR ANY ERRORS WHICH MAY APPEAR HEREIN."

DRAWING DIRECTORY

"THIS DRAWING AND SPECIFICATIONS, HEREIN, ARE THE PROPERTY OF DIGITAL EQUIPMENT CORPORATION AND SHALL NOT BE REPRODUCED OR COPIED OR USED IN WHOLE OR IN PART AS THE BASIS FOR THE MANUFACTURE OR SALE OF ITEMS WITHOUT WRITTEN PERMISSION. COPYRIGHT © 1981 DIGITAL EQUIPMENT CORPORATION.

NOTE:

FOR FIELD MAINTENANCE PRINT SET REFER TO B-TC-KEF11-BB-1

UNIT VARIATIONS

VAR	TITLE
KEF11-BB	HYBRID C.I.S. MICROCODE CHIP.

REVISIONS		
REV.	A	
CHANGE NO.	INITIAL	
CHK		

USED ON OPTION/MODEL: KEF11-BB	DRN. A. AMICO	DATE 21JAN81	TITLE DRAWING DIRECTORY KEF11-BB
	CHK'D. ROBICHAUD	DATE 08APR81	digital
	PROJ. ENG. K. AMUNDSEN	DATE 8 May 81	SIZE B · CODE DD · NUMBER KEF11-BB · REV A
SHEET 1 OF 2	PROD. Greg. [signature]	DATE 9-Jun-81	DIST.

DRB 106A

MC-3

FIND NO.	DRAWING NO.	DESCRIPTION	TYPE
1	MPØ1223-ØØ	KEF11-BB PRINT SET ORDER NO. (MP)	-
	B-TC-KEF11-BB-1	FIELD MAINTENANCE PRINT SET (TC)	-
	K-PL-KEF11-BB-DBP	COMMERCIAL INSTRUCTION SET (KEF11-BB)	E/M
	B-PL-KEF11-BB	SHIPPING LIST KEF11-BB	E/M
2	B-DD-5700006-0	CIS MODULE	E/M
3	A-PS-9905812-0-0	BOX, PAPER SET-UP WITH FOAM	M

FIND NO.	DRAWING NO.	DESCRIPTION	TYPE

TYPE: E ELECTRICAL
M MECHANICAL
E/M ELECTRO/MECHANICAL

digital

TITLE DRAWING DIRECTORY KEF11-BB

SHEET 2 OF 2 | SIZE B | CODE DD | NUMBER KEF11-BB | REV A

DRB 108A

ML-3