# FIELD MAINTENANCE PRINT SET



## TABLE OF CONTENTS


| | |
|---|---|
| B-TC-RL02-AK-1 | TABLE OF CONTENTS |
| E-UA-RL02-AK-0 | DISK DRIVE MOUNTING KIT AND CARTRIDGE |
| MP00553 (COMPLETE) | FIELD MAINTENANCE PRINT SET |
| E-AD-7013688-0-0 | INTERLOCK KIT (MARK III) |


| UNIT VARIATIONS COVERED BY THIS PRINT SET |
|---|
| |

RL02-AK

**Field Maintenance Print Set**

**Digital Equipment Corporation**

PRINT SET ORDER NO.
MP 00698

| REVISIONS | | | |
|---|---|---|---|
| REV | A | | B |
| CHG. NO. | RL02-CZ001 B.MILLER | | RL02-CX007 N.GUENZEL |
| DATE | 9 JUN 78 | | 28 NOV 78 |

| USED ON OPTION/MODEL | |
|---|---|
| RL02-AK | |
| SHEET 1 OF 1 | |

| | | |
|---|---|---|
| DRN. | DATE | 21-SEP-78 |
| CHK'D | DATE | 9 MAY 79 |
| PROJ. ENG. | DATE | |
| FIELD SERV. | DATE | 15 MAY 79 |

digital

TITLE: DISK DRIVE MOUNTING KIT AND CARTRIDGE

| SIZE | CODE | NUMBER | REV. |
|---|---|---|---|
| B | TC | RL02-AK-1 | B |

DIST.

DRB 124

REV. | NUMBER | CODE | SIZE

HOLE LOCATIONS FOR MOUNTING IN H950 AND H960 CABINETS

| AVAILABLE SPACE BENEATH RLØ2 | MOUNTING HOLES (FROM DATUM HOLE) LOWER | UPPER |
|---|---|---|
| 5.25 | 12 | 15 |
| 10.50 | 21 | 24 |
| 15.75 | 30 | 33 |
| 21.00 | 39 | 42 |
| 26.25 | 48 | 51 |
| 31.50 | 57 | 60 |

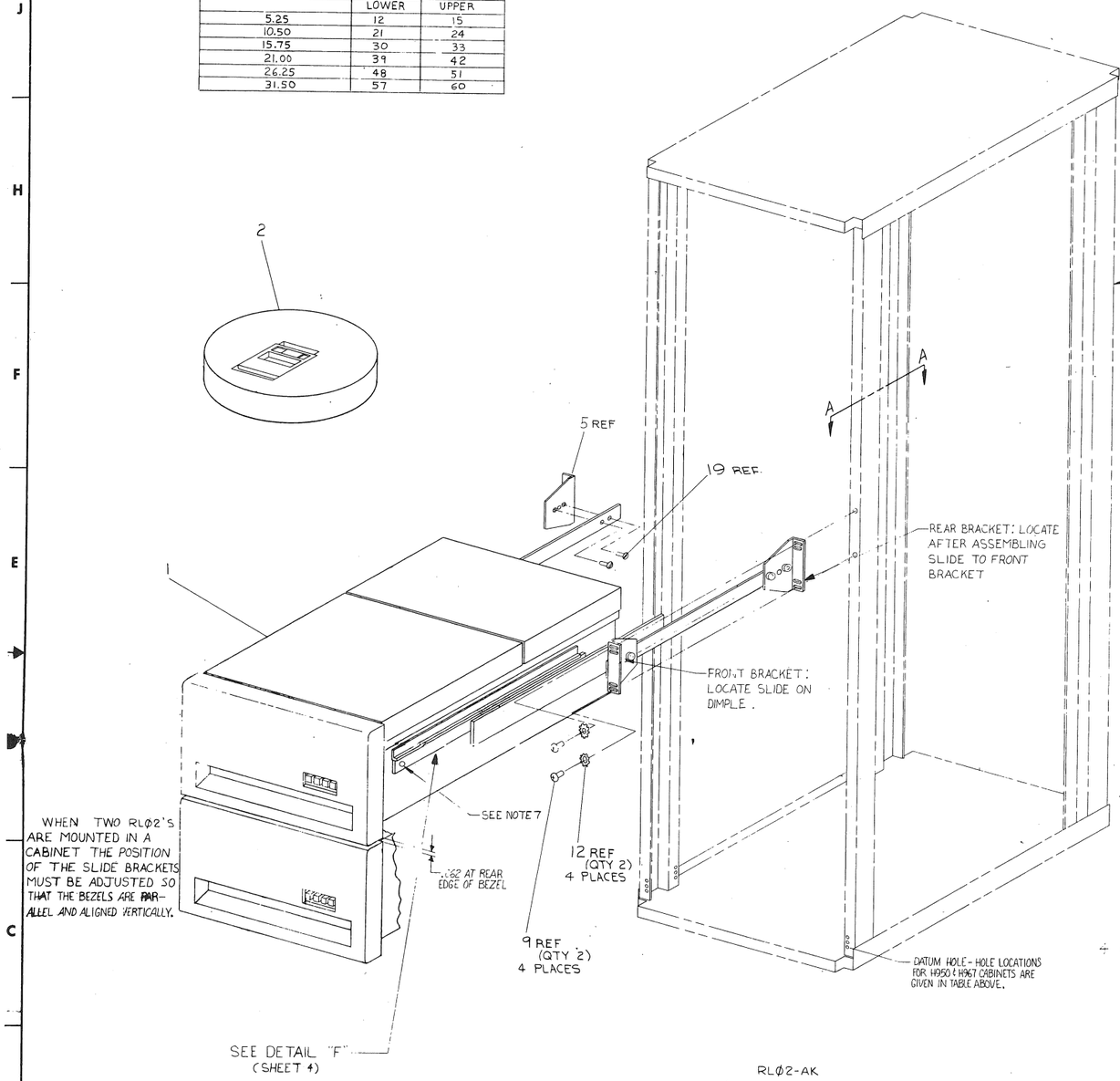


RLØ2-AK
(SHOWN IN A H95Ø CAB)

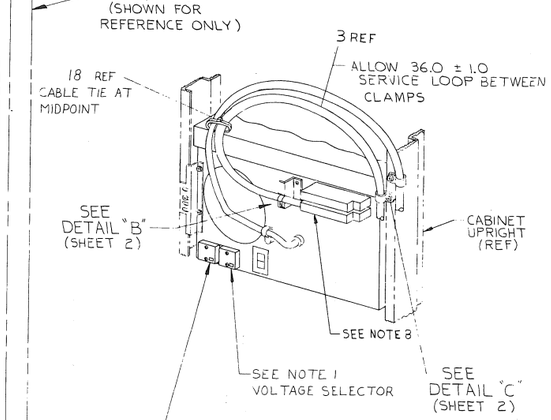


REAR VIEW OF RLØ2-AK DISK DRIVE (ITEM 1) TYPICAL FOR ALL CABS NOTE 11

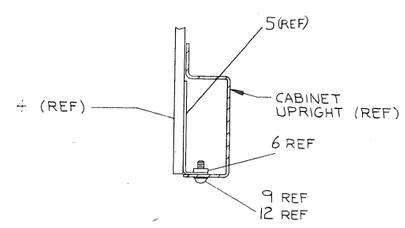


SECTION A-A
(SHOWING TYPICAL MOUNTING OF CHASSIS SLIDES TO CABINET UPRIGHTS)
SCALE: NONE

7. CONT
D SECURE DRIVE TO SLIDES USING SCREWS SUPPLIED. (SEE DETAIL "F", SHEET 4)
TO REMOVE DRIVE: EXTEND SLIDES FULLY, REMOVE SCREWS, RELEASE LATCHES AND LIFT OFF.

8. FOR LAST DRIVE IN A SYSTEM, I/O CABLE PLUGS INTO EITHER SOCKET. TERMINATOR (SUPPLIED WITH CONTROLLER) PLUGS INTO THE OTHER.

NOTES CONT. ON SH. 2

NOTES:

1. MACHINES ARE SHIPPED CONFIGURED FOR 110 V, AND NOMINAL VOLTAGE RANGE. FOR 220 V OPERATION REMOVE TWO SCREWS FROM "VOLTAGE SELECTOR" COVER, WITHDRAW THE COVER, AND RE-INSERT IT TURNED UPSIDE DOWN. AFTER INSERTION, 220 WILL BE SHOWING THRU THE SMALL WINDOW. REPLACE THE TWO SCREWS, CUT OFF 110V PLUG ON THE POWER CORD, REPLACE BY 220V PLUG (ITEM #20). FOR CONVERSION SEE DETAIL "G", SHEET 4.
2. "LOW LINE" AND "NOMINAL LINE" ARE DEFINED ON COVER OF "VOLTAGE RANGE SELECTOR" FOR 60 LINE VOLTAGE OPERATION. REMOVE TWO SCREWS FROM "VOLTAGE RANGE SELECTOR" COVER, WITHDRAW THE COVER AND RE-INSERT IT TURNED UPSIDE DOWN. AFTER INSERTION, "LOW" MUST BE SHOWING THRU THE SMALL WINDOW. REPLACE THE TWO SCREWS.
3. WHEN AN RLØ2-AK IS ORDERED IN CONJUNCTION WITH H9500, H9501 H9502, H9503, H9600, H9601, H9602, H9603 INTERLOCK KIT(S) (REF 21) OR CABLE RESTRAINT SYSTEM(S) (REF 22) MUST BE ORDERED AND INSTALLED.
4. WHEN AN RLØ2-AK IS ORDERED IN CONJUNCTION WITH A H95Ø3/H96Ø3 THE TRIM PIECES (H9514-B) MUST BE ORDERED
5. WHEN AN RLØ2-AK IS ORDERED IN CONJUNCTION WITH A H9501/H96Ø1 TRIM PIECES (H9514-A) MUST BE ORDERED.
6. TO ATTACH SHIPPING BRACKET (ITEM 7) REMOVE TWO SCREWS AND TWO LOCKWASHERS FROM ONE SIDE OF THE POWER PANEL ON THE REAR OF DISK DRIVE (ITEM 1), POSITION A SHIPPING BRACKET TO DETERMINE LOCATION OF "U" NUT (ITEM 13) AND ATTACH BRACKET USING ORIGINAL SCREWS AND LOCKWASHERS AND ITEMS 12 AND 9 (AS SHOWN IN DETAIL "D") BRACKET MAY BE ATTACHED TO EITHER SIDE OF UNIT.
7. TO MOUNT RLØ2 IN CABINET:
   A. MOUNT BRACKETS AND SLIDES TO UPRIGHTS.
   B. EXTEND SLIDES AS FAR AS POSSIBLE BY RELEASING CATCHES. (SEE DETAIL "F" SHT 4)
   C. PLACE DRIVE ON SLIDES AND PUSH BACK UNTIL ENDS OF RAILS FIT UNDER TABS ON SLIDES AND LATCHES ENGAGE.

CAUTION: OFF SHEET PARTS LIST EXISTS.
SEE K-PL-RLØ2-AK-DBP (Z0848).

| REV. | DRN. | REVISIONS |
|---|---|---|
| * | | RELEASE TO ECO CONTROL AT REV A. ADD RLØ2-CØ007 |
| A | RLØ2-CØØ1 B. MILLER | |
| B | RLØ2-CØØ3 B. MILLER | |
| C | RLØ3-CX007 K. GUENZEL | |

| | DESCRIPTION | DWG./PART NO. | ITEM NO. |
|---|---|---|---|
| QUANTITY & VARIATION | UNLESS OTHERWISE SPECIFIED DIMENSIONS ARE IN INCHES | | |

| ANGLES ±0°30' | CLASS OF ACCURACY (CHECK ONE) | OVER 0 TO 0.3 | OVER 0.3 TO 1.2 | OVER 1.2 TO 4.0 | OVER 4.0 TO 12.0 | OVER 12.0 TO 40.0 | OVER 40.0 TO 80.0 |
|---|---|---|---|---|---|---|---|
| SURFACE QUALITY IN MICROINCHES | MEDIUM | ±.004 | ±.008 | ±.012 | ±.016 | ±.024 | ±.04 |
| | PREFERRED | ±.012 | ±.016 | ±.025 | ±.04 | ±.063 | ±0.1 |

THIRD ANGLE PROJECTION

REMOVE BURRS AND BREAK SHARP CORNERS

DO NOT SCALE DWG

MATERIAL SEE PARTS LIST

FINISH

DRN. 5 MAY 79
CHK'D 5 May 79
ENG.
PROJ. ENG. 11 May 79
PROD. 5 JUN 79

FIRST USED ON RLØ2

digital

TITLE DISK DRIVE MTG. KIT & CARTRIDGE

NEXT HIGHER ASSY. B-DD-RLØ2-AK

SCALE NONE

SHEET 1 OF 4

SIZE E CODE UA NUMBER RLØ2-AK-Ø REV. C

DIST.

REV. C RLØ2-AK-Ø E UA

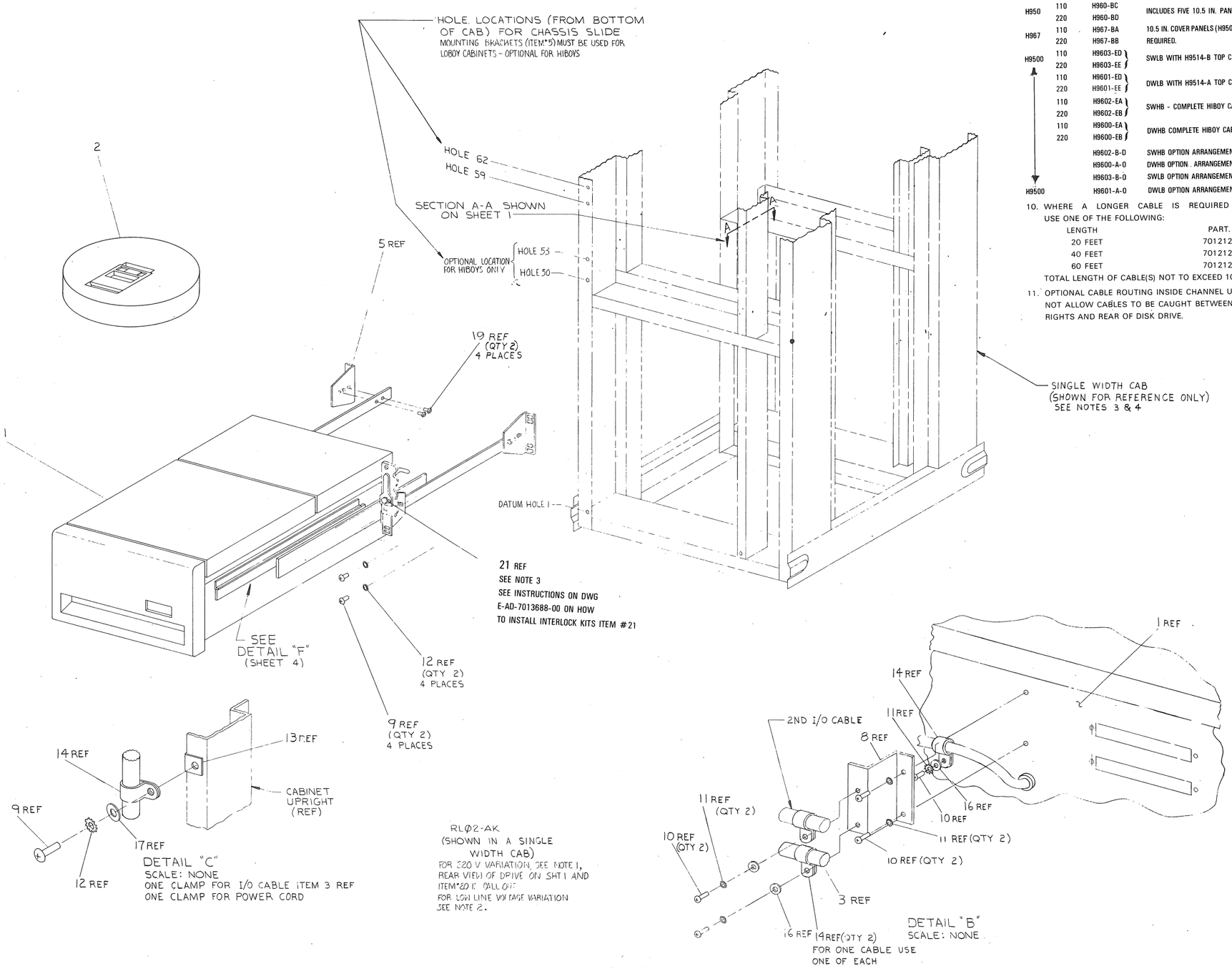


NOTES: (CONT.)

9. CABINET OPTIONS INCLUDE SKINS, DOORS, COVERS, TRIM, & PWR CONTROLLERS.

| TYPE | VOLTAGE | DWG | REMARKS |
|---|---|---|---|
| H950 | 110 | H960-BC | INCLUDES FIVE 10.5 IN. PANELS |
| | 220 | H960-BD | |
| H967 | 110 | H967-BA | 10.5 IN. COVER PANELS (H950-0A) MUST BE ORDERED IF REQUIRED. |
| | 220 | H967-BB | |
| H9500 | 110 | H9603-ED | SWLB WITH H9514-B TOP COVERS. |
| | 220 | H9603-EE | |
| | 110 | H9601-ED | DWLB WITH H9514-A TOP COVERS. |
| | 220 | H9601-EE | |
| | 110 | H9602-EA | SWHB - COMPLETE HIBOY CABINET |
| | 220 | H9602-EB | |
| | 110 | H9600-EA | DWHB COMPLETE HIBOY CABINET |
| | 220 | H9600-EB | |
| | | H9602-B-0 | SWHB OPTION ARRANGEMENT DWG. ORDER AS REQ'D |
| | | H9600-A-0 | DWHB OPTION ARRANGEMENT DWG. ORDER AS REQ'D |
| | | H9603-B-0 | SWLB OPTION ARRANGEMENT DWG. ORDER AS REQ'D |
| H9500 | | H9601-A-0 | DWLB OPTION ARRANGEMENT DWG. ORDER AS REQ'D |

10. WHERE A LONGER CABLE IS REQUIRED THAN ITEM #3 USE ONE OF THE FOLLOWING:

| LENGTH | PART. NO. |
|---|---|
| 20 FEET | 7012122-20 |
| 40 FEET | 7012122-40 |
| 60 FEET | 7012122-60 |

TOTAL LENGTH OF CABLE(S) NOT TO EXCEED 100 FEET

11. OPTIONAL CABLE ROUTING INSIDE CHANNEL UPRIGHTS. DO NOT ALLOW CABLES TO BE CAUGHT BETWEEN CABINET UPRIGHTS AND REAR OF DISK DRIVE.

| REVISIONS | | |
|---|---|---|
| CHK | CHANGE NO. | REV. |

| | | | |
|---|---|---|---|
| TITLE DISK DRIVE MTG KIT & CARTRIDGE | SIZE E | CODE UA | NUMBER RLØ2-AK-Ø | REV. C |
| SCALE NONE | SHEET 2 OF 4 | DIST. | | |

DEC FORM NO. DRE 100

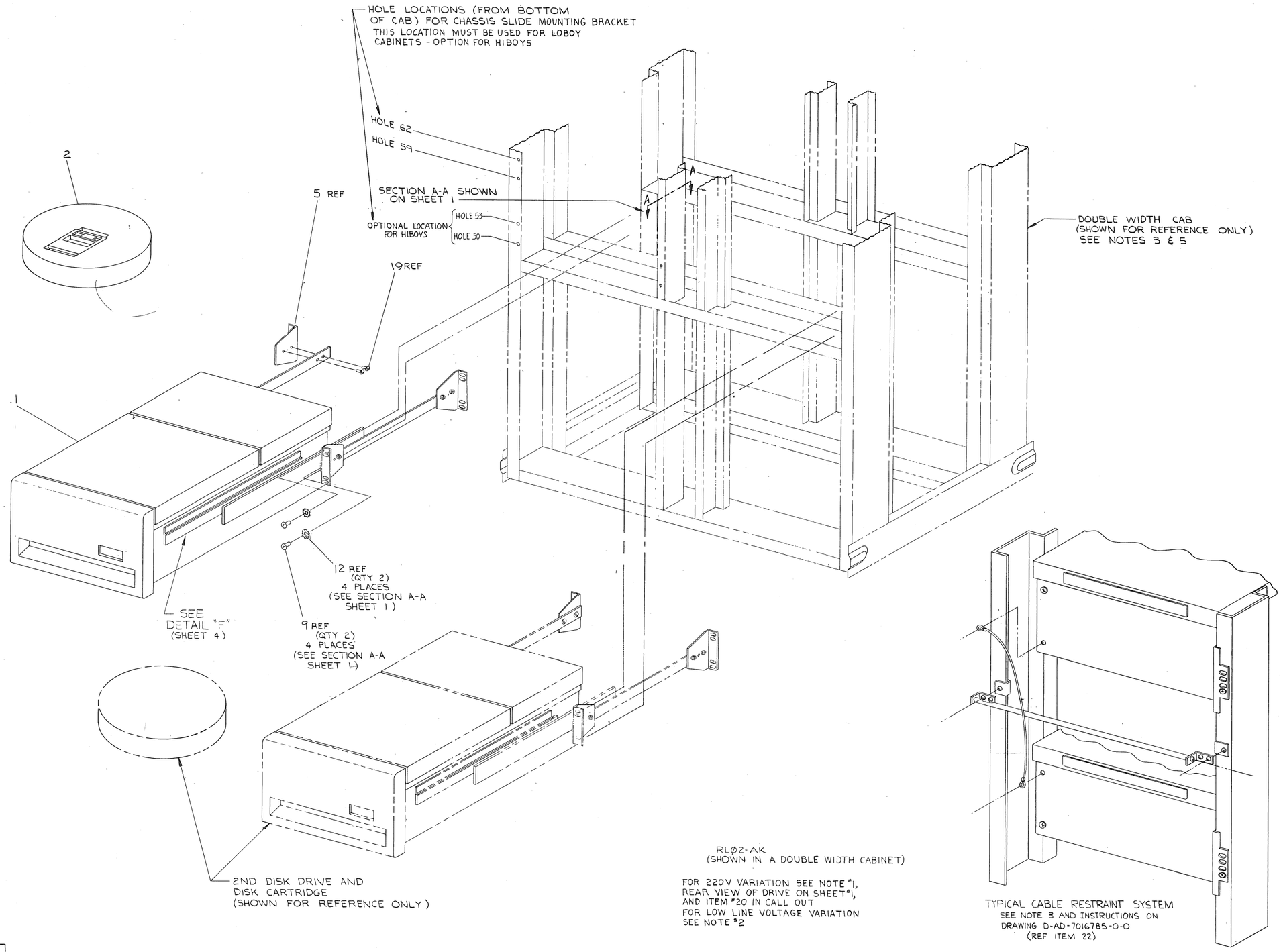


| REVISIONS | | |
|---|---|---|
| CHK | CHANGE NO. | REV. |

| TITLE | SIZE | CODE | NUMBER | REV. |
|---|---|---|---|---|
| DISK DRIVE MTG KIT & CARTRIDGE | E | UA | RLØ2-AK-Ø | C |
| SCALE NONE | SHEET 3 OF 4 | | DIST. | |

DEC FORM NO. DRE 108

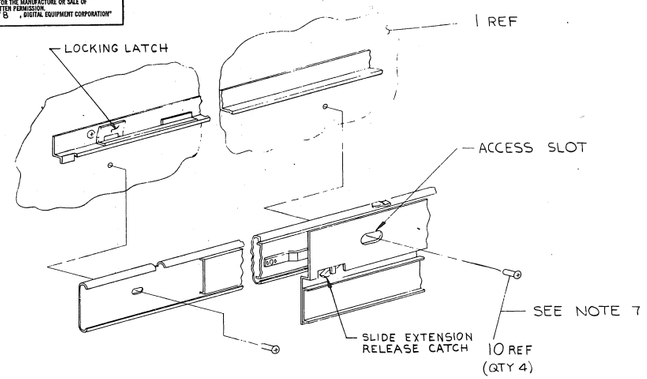


DETAIL 'F'
SEE NOTE 7

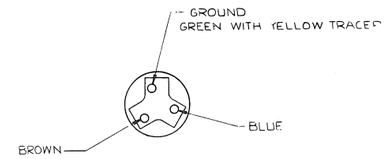


DETAIL G
REAR VIEW OF ITEM 20
WITH STRAIN RELIEF REMOVED

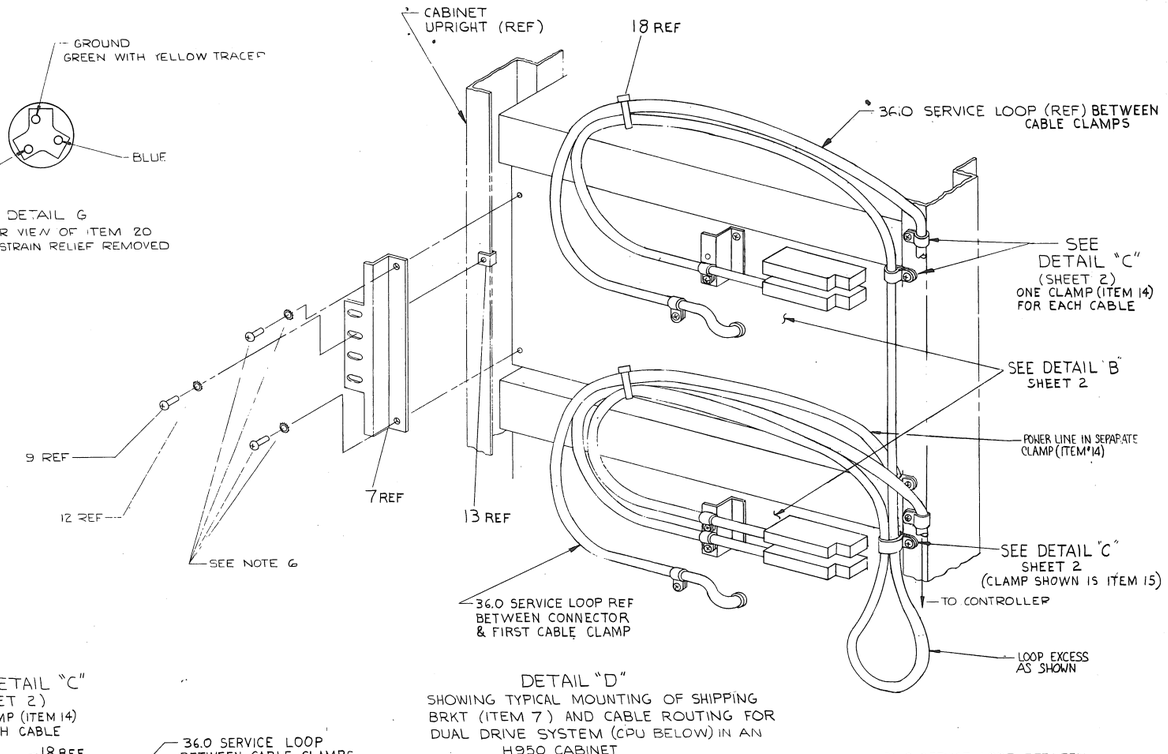


DETAIL "D"
SHOWING TYPICAL MOUNTING OF SHIPPING BRKT (ITEM 7) AND CABLE ROUTING FOR DUAL DRIVE SYSTEM (CPU BELOW) IN AN H950 CABINET
NOTE 11

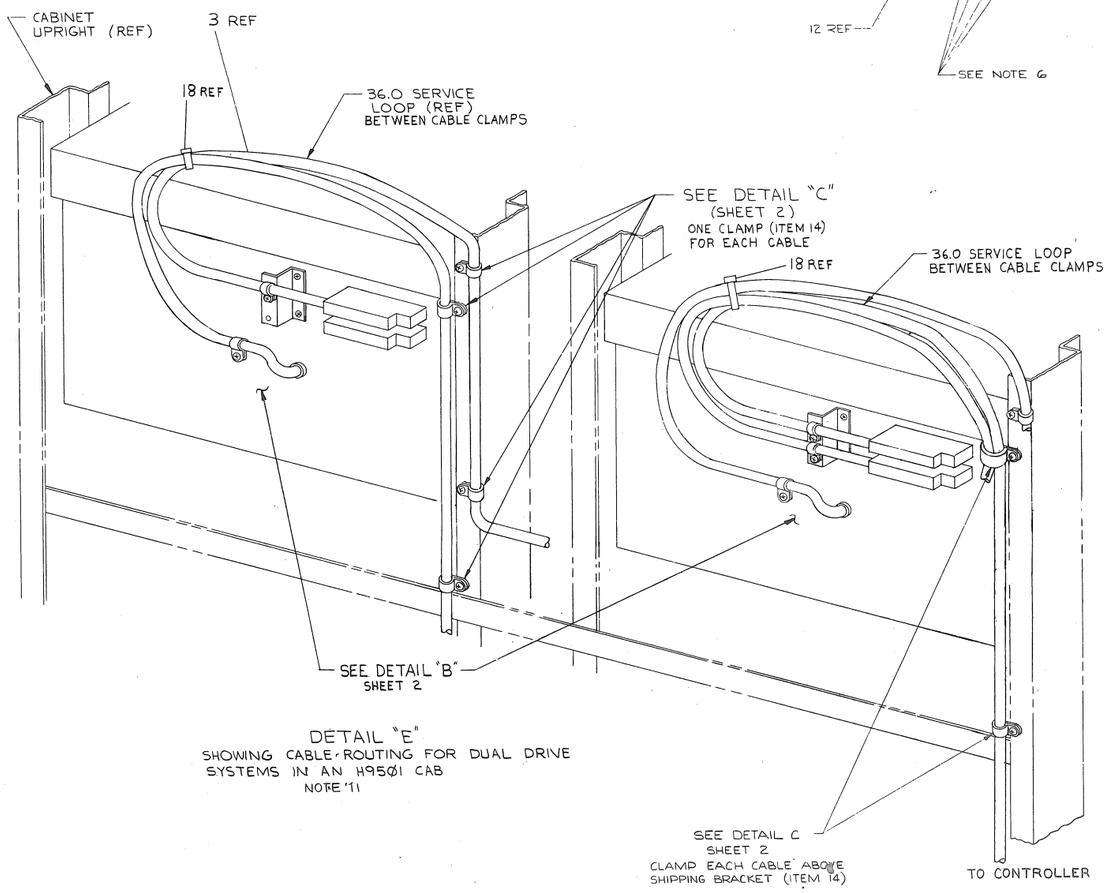


DETAIL "E"
SHOWING CABLE ROUTING FOR DUAL DRIVE SYSTEMS IN AN H9501 CAB
NOTE 11

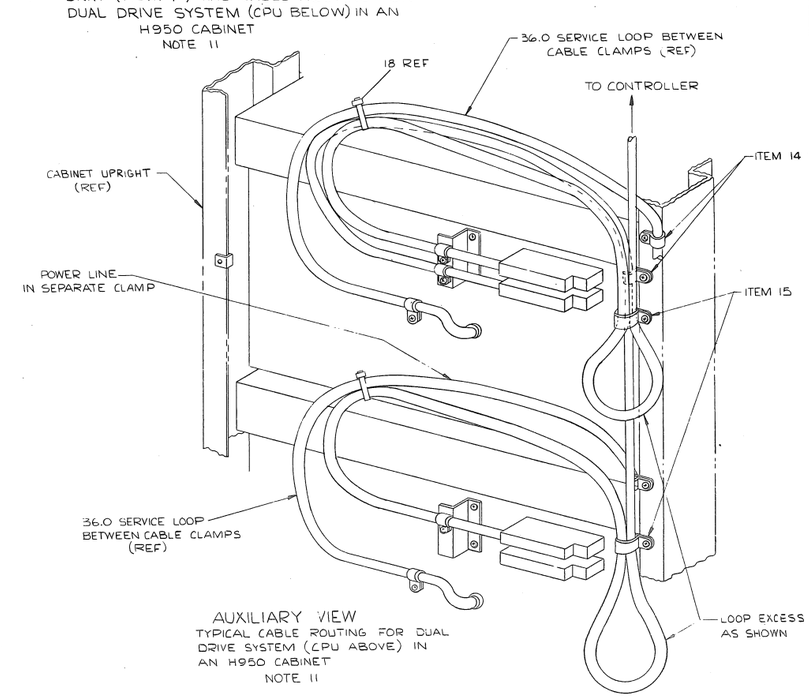


AUXILIARY VIEW
TYPICAL CABLE ROUTING FOR DUAL DRIVE SYSTEM (CPU ABOVE) IN AN H950 CABINET
NOTE 11

| REVISIONS | | |
|---|---|---|
| CHK | CHANGE NO. | REV. |

| TITLE | SIZE | CODE | NUMBER | REV. |
|---|---|---|---|---|
| DISK DRIVE MTG KIT & CARTRIDGE | E | UA | RL02-AK-0 | C |
| SCALE NONE | SHEET 4 OF 4 | | DIST. | |

DEC FORM NO. DIE 105

| LEGEND | |
|---|---|
| PART NO. | VARIATION |
| 7013688-0 | LEFT HAND |
| 7013688-1 | RIGHT HAND |

NOTE:

1. USE ITEM #15 (SHOULDER, WASHER) IN PLACE OF ITEM #12 (FLAT WASHER) WHEN ITEM #1 (RETAINER INTERLOCK) IS NOT MOUNTED THROUGH A SLIDE MOUNTING HOLE.
2. ASSEMBLE ITEM #9 (SPRING, WASHER) WITH CONVEX SIDE TOWARD ITEM #3, 4 (PLATE, CAM).
3. CABINET EQUIPMENT MOUNTING HOLES ARE NUMBERED CONSECUTIVELY FROM THE BOTTOM UP. A SQUARE HOLE IS PROVIDED EVERY FIFTH MOUNTING HOLE TO AID IN COUNTING. WITH STABILIZER ARM PUSHED IN, THE INTERLOCK ROD HOLE PATTERN LINES UP WITH THE VERTICAL MOUNTING HOLES AND IS NUMBERED THE SAME.
4. ITEM #14 MUST ALWAYS BE USED ADJACENT TO ITEM #1.
5. WHEN INSTALLING CABINET TRIM STRIPS, MAKE SURE THEY DON'T INTERFERE WITH INTERLOCK OPERATION.

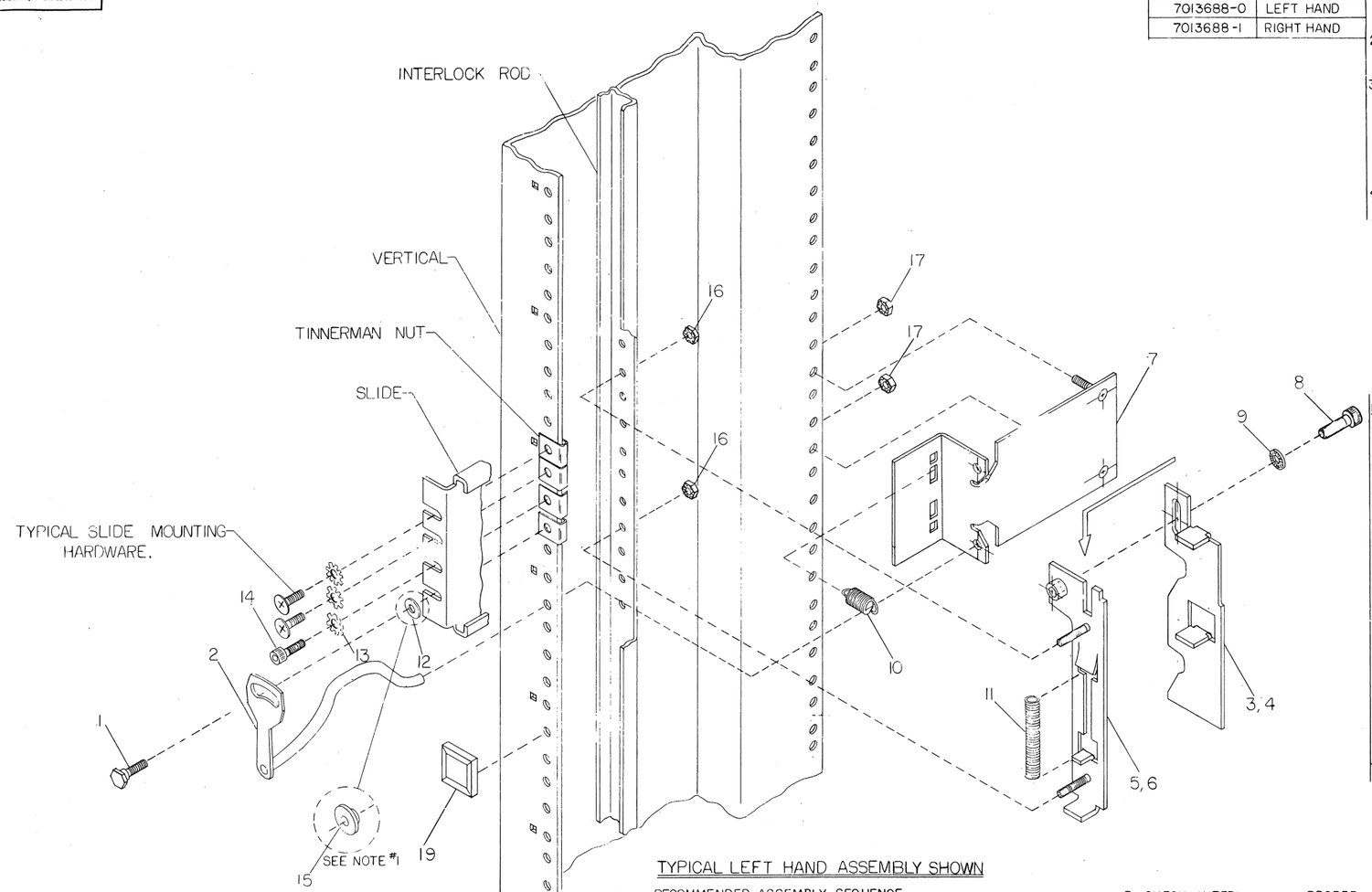


TYPICAL LEFT HAND ASSEMBLY SHOWN

RECOMMENDED ASSEMBLY SEQUENCE

1. PUSH STABILIZER ARM IN.
2. ASSEMBLE ITEM #5, 6 AND #11 ONTO INTERLOCK ROD USING ITEMS #16.
3. ASSEMBLE ITEM #3, 4 ONTO ITEM #5, 6 USING ITEMS #8 AND #9. TIGHTEN ITEM #8 ONLY AFTER DEPRESSING ITEM #3, 4 AGAINST SPRING AS FAR AS POSSIBLE.
4. HOOK ITEM #10 INTO ITEM #7. USE UPPER SLOT FOR "U" ASSEMBLIES AND LOWER SLOT FOR "D" ASSEMBLIES. INSTALL ITEM #7 ONTO CABINET VERTICAL USING ITEMS #17, TORQUE TO 100±30 INCH POUNDS.
5. INSTALL ITEM #2 REMEMBERING TO PASS THROUGH ITEM #10 BEFORE ENGAGING ITEM #7.
6. AT THIS POINT IN THE ASSEMBLY, PROCEDURES FOR NORMAL ASSEMBLY AND SPECIAL ASSEMBLY DIFFER.

A. NORMAL ASSEMBLY

1. MOUNT SLIDE USING ITEMS #1, #12, #13, #14 AND TYPICAL SLIDE MOUNTING HARDWARE.
2. ADJUST INTERLOCK BY LOOSENING ITEM #8 ALLOWING ITEM #3, 4 TO ASSUME ITS PROPER POSITION AND RETIGHTEN ITEM #8 TO 70±30 INCH-POUNDS.
3. CHECK INTERLOCK FOR PROPER OPERATION BY SLIDING THE STABILIZER ARM IN AND OUT.

B. SPECIAL ASSEMBLY

1. INSTALL ITEM #1 AND #15 WITHOUT SLIDE.
2. ADJUST INTERLOCK BY LOOSENING ITEM #8 ALLOWING ITEM #3, 4 TO ASSUME ITS PROPER POSITION AND RETIGHTEN ITEM #8 TO 70±30 INCH-POUNDS.
3. REMOVE ITEM #1, #15.
4. MOUNT SLIDE USING ITEMS #1 #12 #13 #14 AND TYPICAL SLIDE MOUNTING HARDWARE.
5. CHECK INTERLOCK FOR PROPER OPERATION BY SLIDING THE STABILIZER ARM IN AND OUT.

7. BOTH SPECIAL AND NORMAL ASSEMBLIES — INSTALL ITEMS #19, ONE ON EACH VERTICAL MOUNTING RAIL (BOTH SIDES OF EQUIPMENT), IN THE PLACES WHERE THE REARMOST PART OF THE BEZEL WOULD NORMALLY STRIKE. ITEMS #19 MUST NOT INTERFERE WITH ITEM #2 (ASSEMBLY, CHURCHKEY) OR TRIM STRIPS.

INSTRUCTIONS

1. THE SYSTEM DOCUMENTATION WILL SPECIFY THE INTERLOCK LOCATION AND ASSEMBLY BY LETTER AND NUMBER CODE.

2A. THE FIRST LETTER OF THE CODE SPECIFIES THE DIRECTION IN WHICH THE CHURCH KEY ASSEMBLY MUST BE INSTALLED. "U" SPECIFIES UP (AS SHOWN ON PRINT) AND "D" SPECIFIES DOWN.

B. THE SECOND LETTER (IF ANY) SPECIFIES WHICH OF THE TWO CAM PLATE NOTCHES ENGAGES WITH THE CHURCHKEY ASSEMBLY. IF NO LETTER APPEARS, WE CALL THIS THE NORMAL ASSEMBLY POSITION AND USE THE LOWER NOTCH. IF THE LETTER "S" APPEARS, WE CALL THIS THE SPECIAL ASSEMBLY POSITION AND USE THE UPPER NOTCH.

C. THE NUMBER AT THE END OF THE INSTALLATION CODE SPECIFIES THE CABINET MOUNTING HOLE FOR THE ITEM #1 (INTERLOCK RETAINER). ALL OTHER PARTS OF THE ASSEMBLY ARE REFERENCED FROM THIS HOLE USING THE CHART BELOW.

| DIRECTION & NOTCH SPECIFICATION | BACK PLATE: LOCATION OF TOP MOUNTING STUD. | OUTRIGGER: LOCATION OF TOP MOUNTING STUD. |
|---|---|---|
| U | X + 4 | X |
| US | X | X |
| D | X + 6 | X + 3 |
| DS | X + 2 | X + 3 |

NOTE: "X" IS THE SPECIFIED INTERLOCK RETAINER LOCATION.

CAUTION: OFF PRINT PARTS LIST A-PL-7013688-0-0

| | | | |
|---|---|---|---|
| QUANTITY & VARIATION | DESCRIPTION | DIGIPART NO. | ITEM NO. |
| | UNLESS OTHERWISE SPECIFIED DIMENSIONS ARE IN INCHES | | |
| | ANGLES ±0°30' / SURFACE QUALITY IN MICROINCHES | CLASS OF ACCURACY (INCH DECS) | 1 / 2 / 3 / 4 / 5 / 6 |
| | | MACHINE | ±.03 / ±.03 / ±.03 / ±.03 / ±.03 / ±.03 |
| | | PROFILE | ±.012 / ±.016 / ±.020 / ±.010 / ±.010 / ±.010 |

THIRD ANGLE PROJECTION

REMOVE BURRS AND BREAK SHARP EDGES

DO NOT SCALE DRAWING

MATERIAL: SEE PARTS LIST

FINISH: NONE

DRN. R. LEON

CHK'D:

ENG:

MFG:

QUALITY:

DIGIPART NO. 7013688-A

TITLE: INTERLOCK KIT (MARK III)

SIZE: B

CODE IDENT NO.: 61341

NUMBER: 7013688-0-0

REV.

SCALE: NONE

SHEET 1 OF 1

REVISIONS: REV. / CHANGE NO. / CHK

DEC FORM NO. DRE 100-B

# FIELD MAINTENANCE PRINT SET



## TABLE OF CONTENTS


| | |
|---|---|
| Field Maintenance Print Set | B-TC-RL02-0-1 |
| RL02 Disk Drive Assembly | E-UA-RL02-0-0 (Sheets 1,2 &3 Only) |
| RL02 System Cabling | D-IC-RL02-0-3 (Sheet 2 Only) |
| Power Panel Assembly | D-AD-7012130-0-0 |
| Read/Write Board | D-UA-5413536-0-0 (Sheet 1 Only)<br>B-PL-5413536-0-0<br>D-CS-5413536-0-1 |
| Front Panel | D-UA-5411846-0-0 (Sheet 1 Only)<br>B-PL-5411846-0-0<br>D-CS-5411846-0-1 |
| AC Servo | D-UA-5411848-0-0 (Sheet 1 Only)<br>B-PL-5411848-0-0<br>D-CS-5411848-0-1 |
| DC Servo and Power Board | D-UA-5413534-0-0 (Sheet 1 Only)<br>B-PL-5413534-0-0<br>D-CS-5413534-0-1 |
| Drive Logic | D-UA-5414025-0-0 (Sheet 1 Only)<br>A-PL-5414025-0-0<br>D-CS-5414025-0-1 |
| RL02 Disk Drive Assembly | K-PL-RL02-0-DBP |
| Power Panel Assembly | K-PL-7012130-0-DBP |


| UNIT VARIATIONS COVERED BY THIS PRINT SET |
|---|
| |

RL02

**Field Maintenance Print Set**

**Digital Equipment Corporation**

PRINT SET NO.
MP00553

| REVISIONS | | | |
|---|---|---|---|
| REV | A | B | |
| CHG. NO. | RL02-CX0005 B.MILLER | RL02-CX0007 K.GUENZEL | |
| DATE | RP-1 23-Nov-77 | RP-1 28-Nov-79 | |

| USED ON OPTION/MODEL | |
|---|---|
| RL02 | |
| SHEET 1 OF 1 | |

| | | |
|---|---|---|
| DRN. R.Richard | DATE 28 Sep 78 | TITLE: RL02 DISK DRIVE |
| CHK'D W.Maier | DATE 6 JUN 79 | digital |
| PROJ. ENG. | DATE 6-6-79 | SIZE B / CODE TC / NUMBER RL02-0-1 / REV. B |
| FIELD SERV. Clay Pierce | DATE 6 JUN 79 | DIST. |

DRB 124

NOTES

1. LOWER HEAD (ITEM 65) SHALL BE POSITIONED REARWARDS AGAINST PIN IN CARRIAGE
2. ALL SCREWS TO BE TIGHTENED AS FOLLOWS:

| | | | | |
|---|---|---|---|---|
| 4-40 | SCREW, | TORQUE | 3.5 ± 0.5 | IN LBS |
| 6-32 | " | " | 5.0 ± 1.0 | " |
| 8-32 | " | " | 10.0 ± 1.0 | " |
| 10-32 | " | " | 18.0 ± 2.0 | " |

3. DRIVE BELT TENSION 10.0 ± 1.0 LBS.
4. 4-40 HEAD MOUNTING BOLTS TO BE TIGHTENED TO 5±.5 IN. LBS.
5. TORQUE 8-32 SELF TAPPING HARDWARE (ITEM 69) TO 6-18 IN LBS.
6. BLOWER HOUSING SECURING HARDWARE TO BE REMOVED BEFORE OPERATING UNIT.

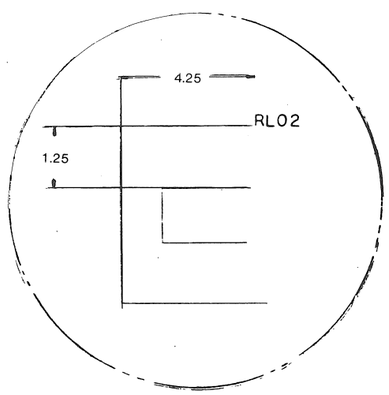


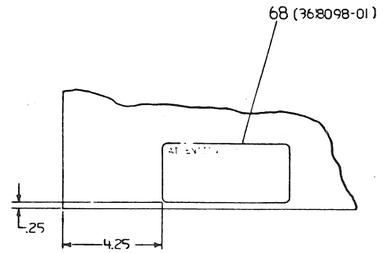


VIEW B-B

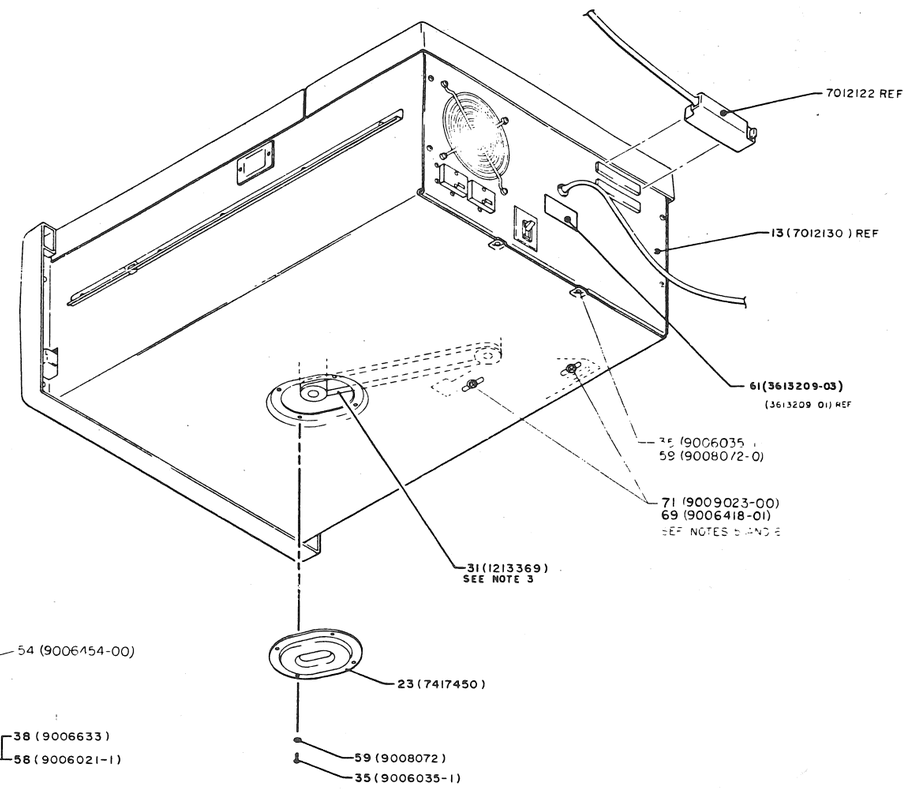


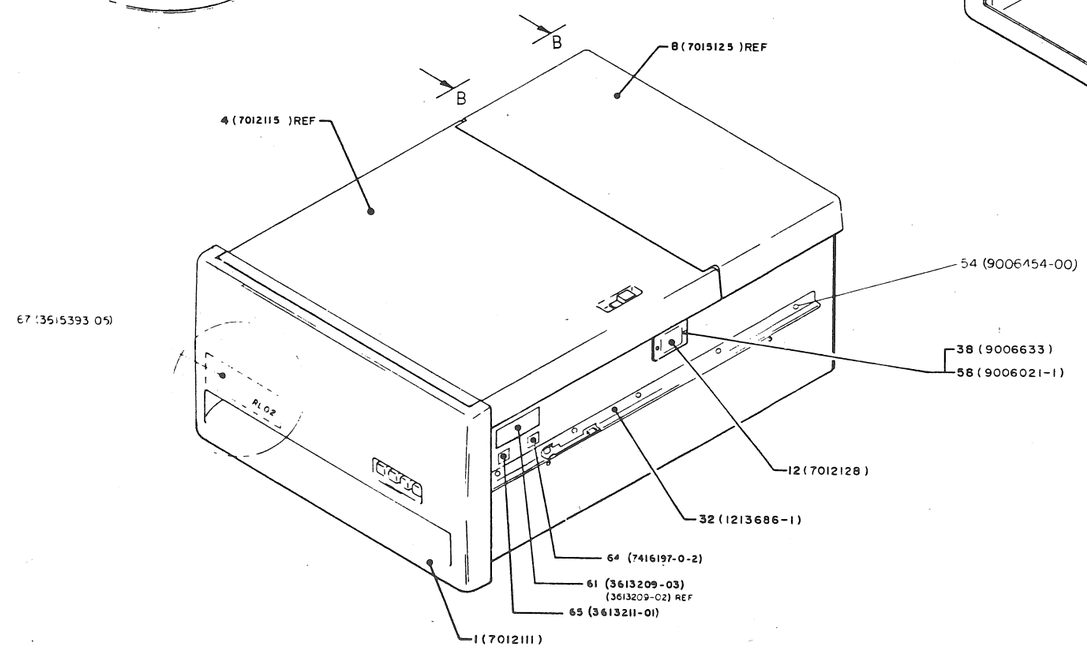


CAUTION

OFF-SHEET PARTS LIST EXISTS.
SEE K-PL-RL02-0-DBP (20485).

| REV | DATE | DRAWN | CHK | ENG | DESCRIPTION |
|---|---|---|---|---|---|
| D | [illegible] | [illegible] | [illegible] | [illegible] | [illegible] |
| I | [illegible] | [illegible] | [illegible] | [illegible] | [illegible] |
| F | [illegible] | [illegible] | [illegible] | [illegible] | [illegible] |
| H | [illegible] | RL02-0688 | M. ZARCH | [illegible] | [illegible] |
| J | [illegible] | RL02-0202 | M. ZARCH | [illegible] | [illegible] |
| K | [illegible] | RL02-0203 | K. GUENZEL | [illegible] | [illegible] |

| | | | |
|---|---|---|---|
| THIRD ANGLE PROJECTION | DRAWN | | TITLE RL02 DISK DRIVE ASSEMBLY |
| REMOVE BURRS AND BREAK SHARP CORNERS | | | |
| MATERIAL SEE PARTS LIST | SCALE | | SIZE E / CODE IDENT NO UA / DRAWING NUMBER RL02-0-0 / REV K |
| FINISH | SHEET 1 OF 4 | | DIST |

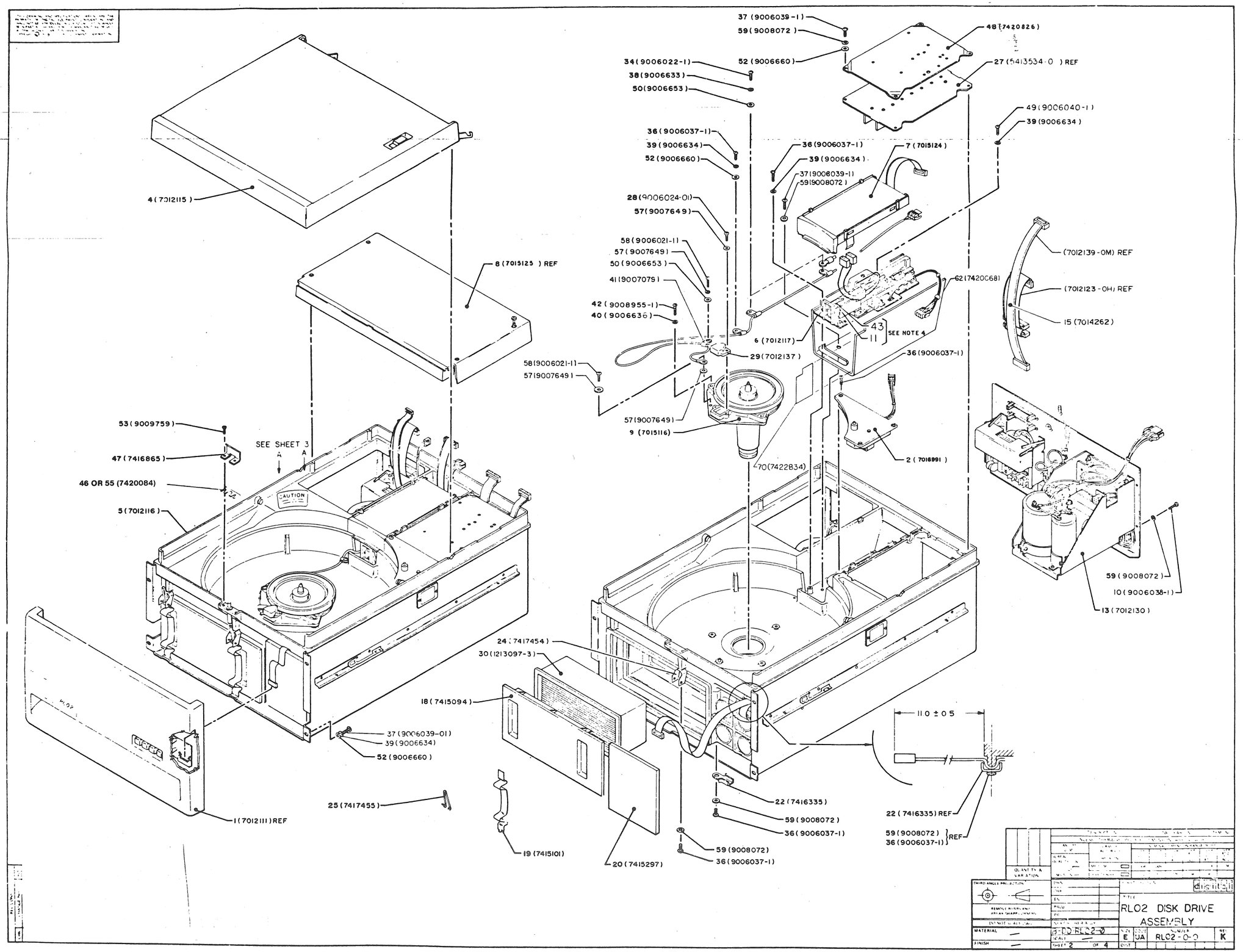
37 (9006039-1)
59 (9008072)
48 (7420826)
34 (9006022-1)
52 (9006660)
27 (5413534-0) REF
38 (9006633)
50 (9006653)
49 (9006040-1)
39 (9006634)
36 (9006037-1)
39 (9006634)
52 (9006660)
36 (9006037-1)
39 (9006634)
37 (9006039-1)
59 (9008072)
7 (7015124)
4 (7012115)
28 (9006024-01)
57 (9007649)
58 (9006021-1)
57 (9007649)
50 (9006653)
41 (9007079)
8 (7015125) REF
(7012139-0M) REF
62 (7420068)
(7012123-0H) REF
42 (9008955-1)
40 (9006636)
15 (7014262)
43
11
SEE NOTE 4
6 (7012117)
29 (7012137)
36 (9006037-1)
58 (9006021-1)
57 (9007649)
53 (9009759)
57 (9007649)
9 (7015116)
SEE SHEET 3
A
A
47 (7416865)
70 (7422834)
2 (7016991)
46 OR 55 (7420084)
CAUTION
5 (7012116)
59 (9008072)
10 (9006038-1)
13 (7012130)
24 (7417454)
30 (1213097-3)
18 (7415094)
110 ± 0.5
37 (9006039-01)
39 (9006634)
52 (9006660)
22 (7416335)
59 (9008072)
36 (9006037-1)
22 (7416335) REF
25 (7417455)
1 (7012111) REF
59 (9008072)
36 (9006037-1)
REF
19 (7415101)
20 (7415297)
59 (9008072)
36 (9006037-1)
QUANTITY & VARIATION
THIRD ANGLE PROJECTION
REMOVE BURRS AND BREAK SHARP CORNERS
DIMENSIONS IN INCHES UNLESS OTHERWISE SPECIFIED
MATERIAL
FINISH
digital
TITLE
RLO2 DISK DRIVE ASSEMBLY
B-CD-RLO2-0
SIZE E
CODE UA
NUMBER RLO2-0-0
REV K
SCALE
SHEET 2 OF 4

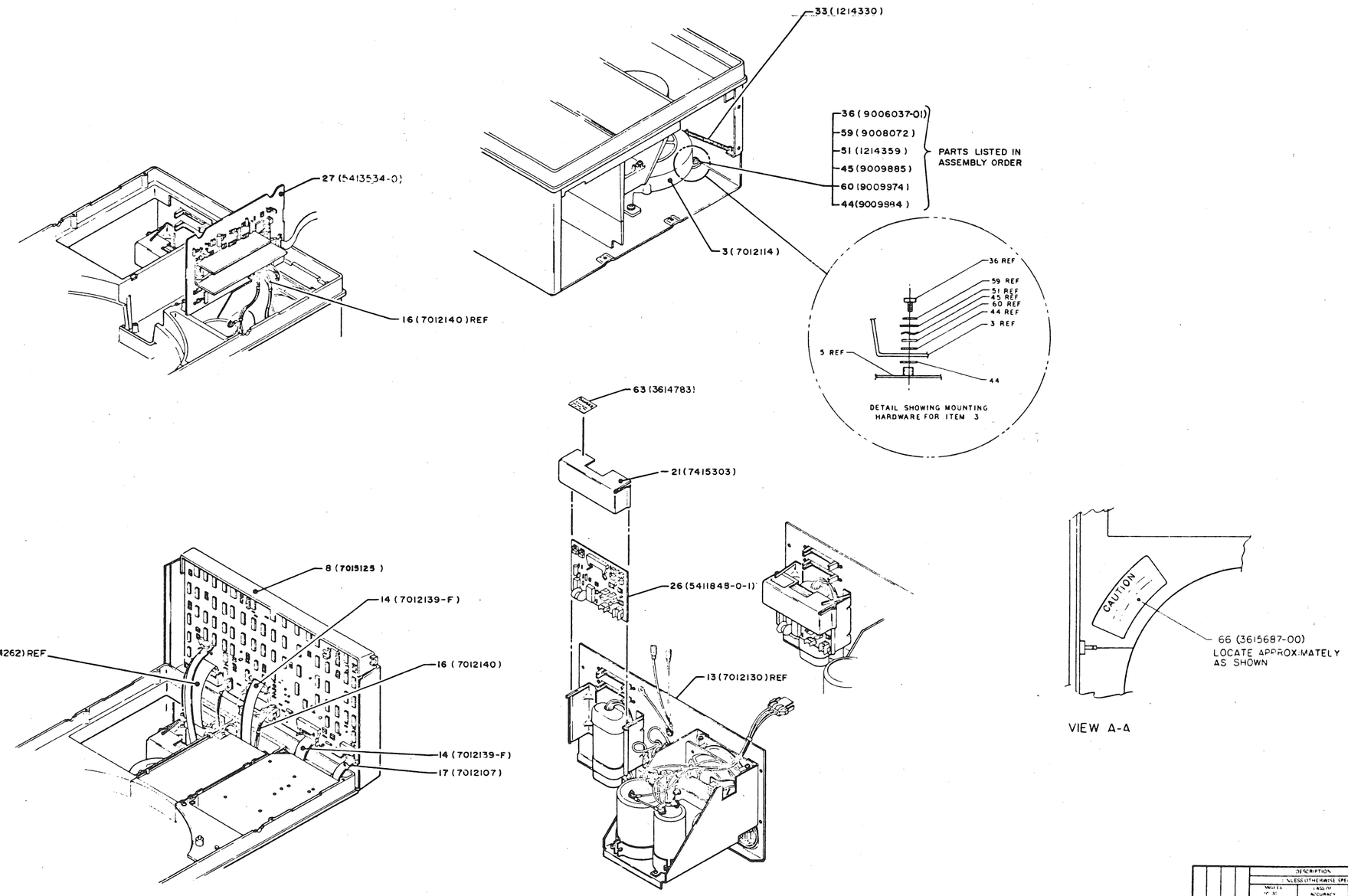


| | | | |
|---|---|---|---|
| QUANTITY & VARIATION | DESCRIPTION | DWG PART NO | ITEM NO |
| | UNLESS OTHERWISE SPECIFIED DIMENSIONS ARE IN INCHES | | |
| | ANGLES ±0°30' | LENGTH ACCURACY (CHECK ONE) | NOMINAL DIMENSION RANGE INCHES |
| | SURFACE QUALITY | MEDIUM | |
| | MICROINCHES | PRECISION | |

THIRD ANGLE PROJECTION

REMOVE BURRS AND BREAK SHARP CORNERS

DO NOT SCALE DWG

| | |
|---|---|
| DRN | |
| CHK'D | |
| ENG | |
| PROJ ENG | |
| PROD | |
| NEXT HIGHER ASSY | 3-DD-RL02-0 |
| MATERIAL | — |
| FINISH | — |

digital

TITLE
RL02 DISK DRIVE ASSEMBLY

| SIZE | CODE | NUMBER | REV |
|---|---|---|---|
| E | UA | RL02-0-0 | K |

SCALE —

SHEET 3 OF 4

DIST

NOTES: (THIS SHEET ONLY)

1. DIMENSION APPLIES TO HIGHEST OR LOWEST POINT ALONG BRUSH ARM OR BLOCK OF BRUSH.
2. 3 TOOLING POINTS. SEE DRAWING 7416846 OR 7415237.
3. DIMENSION HAS TO BE WITHIN .004 AT BOTH EXTREMES OF CARRIAGE TRAVEL.

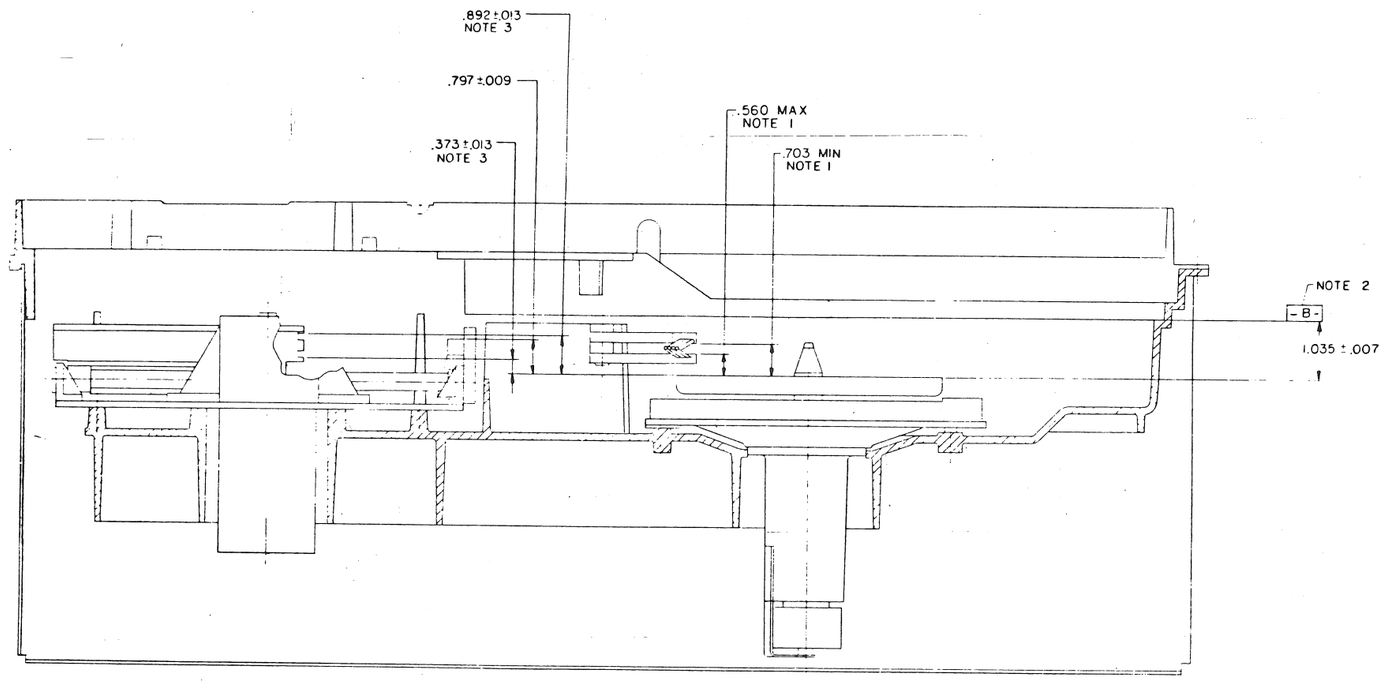


QUANTITY & VARIATION

THIRD ANGLE PROJECTION

REMOVE BURRS AND BREAK SHARP CORNERS

MATERIAL

FINISH

TITLE
RL02 DISK DRIVE ASSEMBLY

REV K

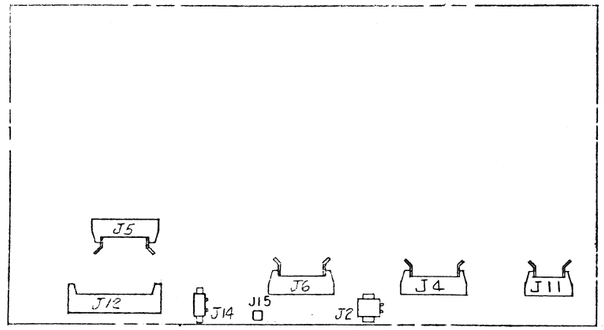


LOGIC BOARD

FIG 1

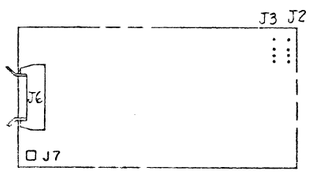


R/W BOARD

FIG 2

FRONT PANEL BOARD

FIG 3

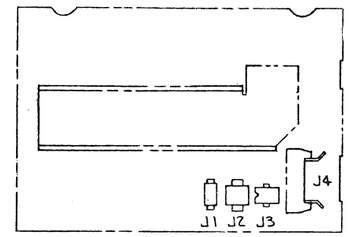


D.C. SERVO BOARD

FIG 4

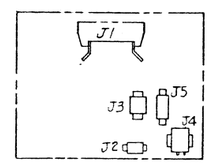


A.C. SERVO BOARD

FIG 5

| REV | CHANGE NO. | DATE | BY | CHECKED |
|---|---|---|---|---|
| A | RL02-CZ001 | | B.MILLER | |
| B | RL02-CX008 | | K.GUENZEL | K.Guenzel |
| C | RL02-CX010 | | M. ZARICH | M. Zarich |

| | | | |
|---|---|---|---|
| QUANTITY & VARIATION | DESCRIPTION | DWG./PART NO. | ITEM NO. |

UNLESS OTHERWISE SPECIFIED DIMENSIONS ARE IN INCHES

| ANGLES ±0° 30' | CLASS OF ACCURACY (CHECK ONE) | NOMINAL DIMENSION RANGE INCHES | | | | | |
|---|---|---|---|---|---|---|---|
| | | OVER 0 TO 0.2 | OVER 0.2 TO 1.2 | OVER 1.2 TO 4.0 | OVER 4.0 TO 12.0 | OVER 12.0 TO 40.0 | OVER 40.0 TO 80.0 |
| SURFACE QUALITY IN ✓ | MEDIUM ☐ | ±.004 | ±.008 | ±.012 | ±.016 | ±.024 | ±.04 |
| MICRO-INCH | PRECISE ☐ | ±.002 | ±.006 | ±.008 | ±.012 | ±.002 | [illegible] |

THIRD ANGLE PROJECTION

REMOVE BURRS AND BREAK SHARP CORNERS

DO NOT SCALE DWG.

MATERIAL

FINISH

DWN K. Noland 25 SEP 78

ENG. K. Guenzel 5-4-79

PROJ. ENG. D. Glover 5-4-79

PROD. [illegible] 5-4-79

NEXT HIGHER ASSY. B-DD-RLØ2-Ø

SCALE

SHEET 1 OF 1

FIRST USED ON RLØ2

TITLE

# RLØ2 SYSTEM CABLING

SIZE D | CODE IC | NUMBER RLØ2-Ø-5 | REV. C

DIST.

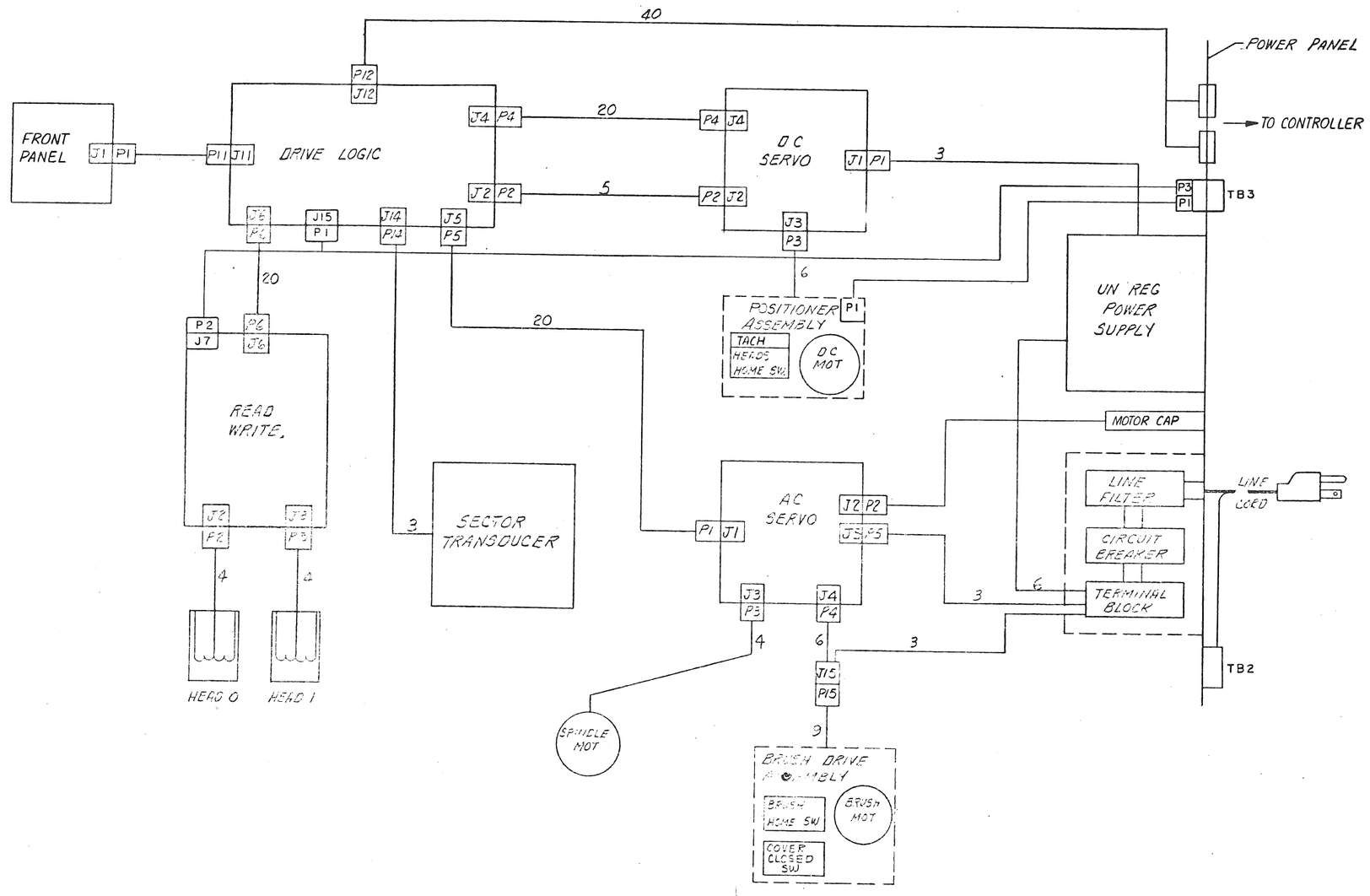


| | | | |
|---|---|---|---|
| DESCRIPTION | | DWG PART NO. | ITEM NO. |
| UNLESS OTHERWISE SPECIFIED DIMENSIONS ARE IN INCHES | | | |
| ANGLES ±0° 30' | CLASS OF ACCURACY (CHECK ONE) | NOMINAL MEASUREMENT RANGE IN INCHES | |
| SURFACE QUALITY IN | MEDIUM | ±0.4 | ±0.06 ±0.012 ±0.018 ±0.024 ±0.4 |
| MICRO INCHES | PRECISION | ±0.2 | ±0.06 ±0.012 ±0.018 ±0.024 ±0.1 |

QUANTITY & VARIATION

THIRD ANGLE PROJECTION

REMOVE BURRS AND BREAK SHARP CORNERS

DO NOT SCALE DWG

MATERIAL

FINISH

DRAWN 25 Sep 78 — RLØ2

CHECKED 4 May 79

PROJ. ENG.

PROD. ENG.

NEXT HIGHER ASSY

B-DD-RLØ2-Ø

SCALE

SHEET 1 OF 2

TITLE

RLØ2
SYSTEM CABLING

| SIZE | CODE | NUMBER | REV |
|---|---|---|---|
| D | D1C | RLØ2-Ø-3 | C |

REVISIONS
REV | CHANGE NO.

| LINE | ITEM | DOCUMENT NUMBER | PART NUMBER | DESCRIPTION | QUANTITY PER VARIATION 00 |
|---|---|---|---|---|---|
| 1 | 1 | D-AD-7012111-0-0 | 7012111-00 | BEZEL ASSY | 1 |
| 2 | 2 | D-AD-7012112-0-0 | 7012112-00 | BRUSH DRIVE ASSY | 1 |
| 3 | 3 | E-AD-7012114-0-0 | 7012114-00 | DISK MOTOR ASSY | 1 |
| 4 | 4 | E-AD-7012115-0-0 | 7012115-00 | FRONT COVER ASSY | 1 |
| 5 | 5 | E-AD-7012116-0-0 | 7012116-00 | MAIN CHASSIS ASSY | 1 |
| 6 | 6 | D-AD-7012117-0-0 | 7012117-00 | POSITIONER ASSY | 1 |
| 7 | 7 | D-AD-7015124-0-0 | 7015124-00 | RL02 R/W BOX ASSY | 1 |
| 8 | 8 | D-AD-7015125-0-0 | 7015125-00 | RL02 REAR COVER ASSY | 1 |
| 9 | 9 | D-AD-7015116-0-0 | 7015116-00 | SPINDLE ASSY | 1 |
| 10 | 10 | | 9006038-01 | SCREW,PAN,PHIL 8-32X 7/16 SS | 4 |
| 11 | 11 | D-IA-7015637-0-0 | 7015637-00 | RL02 DATA HEAD "A"UP | 1 |
| 12 | 12 | B-AD-7012128-0-0 | 7012128-00 | ACCESS COVER ASSEMBLY | 1 |
| 13 | 13 | D-AD-7012130-0-0 | 7012130-00 | POWER PANEL ASSEMBLY | 1 |
| 14 | 14 | B-IA-7012139-0-0 | 7012139-0F | INTERCONNECT CABLE | 2 |
| 15 | 15 | B-IA-7014262-0-0 | 7014262-00 | INTERCONNECT CABLE ASSEMBLY | 1 |
| 16 | 16 | C-IA-7012140-0-0 | 7012140-00 | POWER HARNESS DC | 1 |
| 17 | 17 | B-IA-7012107-0-0 | 7012107-3D | INTERCONNECT CABLE | 1 |
| 18 | 18 | D-MD-7415094-0-0 | 7415094-00 | REAR COVER | 1 |
| 19 | 19 | C-MD-7415101-0-0 | 7415101-00 | SPRING, PLENUM COVER | 2 |
| 20 | 20 | C-MD-7415297-0-0 | 7415297-00 | FILTER,PAD | 1 |
| 21 | 21 | C-MD-7415303-0-0 | 7415303-00 | COVER AC SERVO | 1 |
| 22 | 22 | C-MD-7416335-0-0 | 7416335-00 | CABLE RETAINER | 1 |
| 23 | 23 | D-MD-7417450-0-0 | 7417450-00 | HATCH | 1 |
| 24 | 24 | C-MD-7417454-0-0 | 7417454-00 | BRACKET PLENUM | 2 |
| 25 | 25 | C-MD-7417455-0-0 | 7417455-00 | LATCH PLENUM | 2 |
| 26 | 26 | D-UA-5411848-0-0 | 5411848-00 | ETCH BRD 54-11848 | 1 |
| 27 | 27 | D-UA-5413534-0-0 | 5413534-00 | DC SERVO + POWER SUPPLY (RL02) | 1 |
| 28 | 28 | | 9006024-01 | SCREW,PAN,PHIL 6-32X 1/2 SS | 2 |
| 29 | 29 | D-AD-7012137-0-0 | 7012137-00 | TRANEDUCER ASSY | 1 |
| 30 | 30 | | 1213097-00 | FILTER,AIR,HEPA,33CFM | 1 |

| REVISION HISTORY | | | | BASIC PART NO: ORL02 | | |
|---|---|---|---|---|---|---|
| ENG | ECO NUMBER | REV | SECTION A OF A | DRN: W.GRIMES | DATE: 15 FEB 78 | D I G I T A L |
| --- | RL02-CZ002 | A | SECTION. VARIATION INDEX | CHK'D: W.MAJOR | DATE: 15 FEB 78 | TITLE PARTS LIST |
| BM | RL02-CX003 | B | [A] 00 | | | RL02 DISK DRIVE ASSEMBLY |
| BM | RL02-CX004 | C | | DES.ENG.: B.MILLER | DATE: 15-MAR-79 | |
| KG | RL02-CX006A | D | [B] | | | |
| KG | RL02-CX008 | E | | | | DOCUMENT NUMBER |
| KG | RL02-CX009 | F | [C] | RESP.ENG.: B.MILLER | DATE: 15-MAR-79 | |
| MZ | RL02-CX010 | H | | | | SIZE / CODE / NUMBER / REV |
| MZ | | | [D] | | | |
| | | | [E] | MFG.ENG.: D.LICK | DATE: 15 MAR 79 | K / PL / RL02-0-DBP / H |
| | | | [F] | ASSEMBLY NUMBER: E-UA-RL02-0-0 | TOP DOCUMENT NUMBER: # B-DD-RL02-0 | FILE NAME: Z0485H.PLS / EDIT # 18 |





| LINE | ITEM | DOCUMENT NUMBER | PART NUMBER | DESCRIPTION | QUANTITY PER VARIATION 00 |
|---|---|---|---|---|---|
| 31 | 31 | | 1213369-00 | BELT,WOVEN,ENDLESS.375WX27.148LG | 1 |
| 32 | 32 | | 1213686-01 | MOUNTING RAIL FOR 12-13686-00 | 1 |
| 33 | 33 | | 1214330-00 | SPRING,EXTENSION,2.5LGX.360D | 1 |
| 34 | 34 | | 9006022-01 | SCREW,PAN,PHIL 3-32X 3/8 SS | 2 |
| 35 | 35 | | 9006035-01 | SCREW,PAN,PHIL 8-32X 1/4 SS | 6 |
| 36 | 36 | | 9006037-01 | SCREW,PAN,PHIL 8-32X 3/8 SS | 13 |
| 37 | 37 | | 9006039-01 | SCREW,PAN,PHIL 8-32X 1/2 SS | 12 |
| 38 | 38 | | 9006633-00 | WASHER,LOCK,INT,.2800D X .146ID | 4 |
| 39 | 39 | | 9006634-00 | WASHER,LOCK,INT,.2300D X .172ID | 15 |
| 40 | 40 | | 9006636-00 | WASHER,LOCK,INT,.3800D X .200ID | 3 |
| 41 | 41 | | 9007079-00 | CLAMP, CABLE, SCREW MNT, 1/8" | 4 |
| 42 | 42 | | 9008955-01 | SCREW,PAN,PHIL 10-32X 15/16SS | 3 |
| 43 | 43 | D-IA-7015637-0-0 | 7015637-01 | RL02 DATA HEAD "A" DN | 1 |
| 44 | 44 | | 9009884-00 | WASHER, FLAT, TEFLON .62 OD X.31 | 4 |
| 45 | 45 | | 9009885-00 | WASHER, SPRING | 2 |
| 46 | 46 | B-MD-7420084-0-0 | 7420084-00 | SHIM, LATCH | A/R |
| 47 | 47 | C-MD-7416865-0-0 | 7416865-00 | BRACKET LATCH | 1 |
| 48 | 48 | D-MD-7420826-0-0 | 7420826-00 | COVER, DC SERVO BOARD | 1 |
| 49 | 49 | | 9006040-01 | SCREW,PAN,PHIL 8-32X 5/8 SS | 2 |
| 50 | 50 | | 9006653-00 | WASHER, FLAT, .375 O.D. X .156 I | 3 |
| 51 | 51 | | 1214359-00 | WASHER,FLAT,S/S .169ID X .620D X | 2 |
| 52 | 52 | | 9006660-00 | WASHER, FLAT, .375 O.D. X .187 I | 11 |
| 53 | 53 | | 9009759-00 | SCREW,FLAT,PHIL, 8-32X 3/8 | 2 |
| 54 | 54 | | 9006454-00 | RIVET, BLIND, .156 DIA X .254 LG | 10 |
| 55 | 55 | B-MD-7420084-0-0 | 7420084-01 | SHIM LATCH | A/R |
| 56 | 56 | | 3700406-00 | INSTR PKG DISK RL01 DRIVE | 1 |
| 57 | 57 | | 9007649-00 | WASHER, LOCK, EXTERNAL TOOTH #6 | 5 |
| 58 | 58 | | 9006021-01 | SCREW,PAN,PHIL 6-32X 5/16 SS | 4 |
| 59 | 59 | | 9008072-00 | WASHER, LOCK, EXTERNAL TOOTH #8 | 21 |
| 60 | 60 | | 9009974-00 | WASHER, FLAT, METAL,.62 O.D. X | 2 |
| 61 | 61 | | 3613209-03 | LABEL,ELECTRICAL DATA VARIATIO | 1 |
| 62 | 62 | D-MD-7420068-0-0 | 7420068-00 | SHIELD POSITIONER | 1 |
| 63 | 63 | | 3614783-00 | LABEL,ADH BACK "DANGER HIGH VOLT | 1 |
| 64 | 64 | A-DC-7416197-0-0 | 7416197-02 | DECAL, LA36 | 1 |
| 65 | 65 | | 3613211-01 | DECAL,CLEAR PREPRINTED CSA 1-1/4 | 1 |
| 66 | 66 | | 3615687-00 | LABEL,ADHESIVE BACK FOR RL02 | 1 |
| 67 | 67 | | 3615393-05 | LABEL,RUB-ON,RL02 | 1 |
| 68 | 68 | | 3616643-00 | LABEL,CAUTION | 1 |
| 69 | 69 | | 9006418-01 | SCREW,TAPPING,TYPE TT,PAN ,PHIL, | 2 |
| 70 | 70 | B-MD-7422834-0-0 | 7422834-00 | INSULATOR,HEAD CABLE | 1 |
| 71 | 71 | | 9009023-00 | WASHER,LOCK,INT,.3300D X .172ID | 2 |
| 72 | 72 | C-IA-7017608-0-0 | 7017608-00 | *** THIS ITEM IS NOT USED *** | - |
| 73 | 73 | B-IA-7017609-0-0 | 7017609-00 | *** THIS ITEM IS NOT USED *** | - |

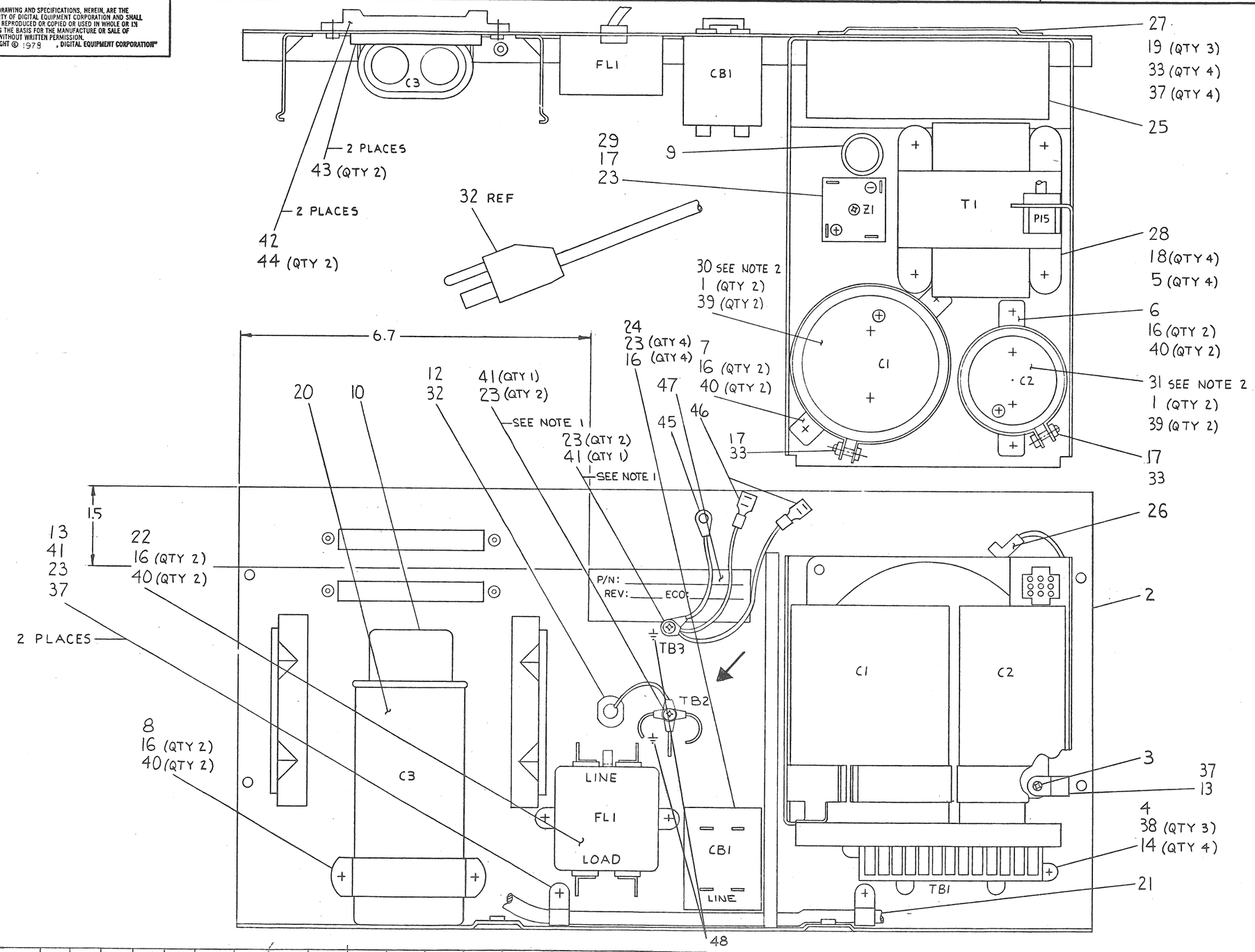


NOTES:
1. INT TOOTH LOCK WASHERS (ITEM 23) ARE USED OVER AND UNDER GROUND TERMINALS.
2. ORIENT TERMINALS AS SHOWN.

→ VALID CS FOR REV V AND V1

NOTE:
GROUNDS MOVED TO LINE FILTER FOR REV V1

CAUTION: OFF SHEET PARTS LIST EXISTS.
SEE K-PL-7012130-0-DBP (ZØ849)

| REV. | CHANGE NO. | CHK | REVISIONS |
|---|---|---|---|
| A | RELEASED AT REV A PREVIOUS REV XØ8 | | |
| B | 7012130-0001 G.REICHENBERG | | |
| C | 7012130-0002 G.SCHNEIDER | | |
| D | RLØ1-00009 G.SCHNEIDER | | |
| E | 7012130-CX003 K.GUENZEL | | |
| F | 7012130-CX004 G.REICHENBERG | | |
| H | 7012130-CX005 G.REICHENBERG | | |
| J | RLØ1-CZØ18 K.GUENZEL | | |
| K | 7012130-CZØØ6 K.GUENZEL | | |
| L | 7012130-CZØØ7 K.GUENZEL | | |
| M | 7012130-CZØØ8 K.GUENZEL | | |
| N | 7012130-CXØØ9 K.GUENZEL | | |
| P | 7012130-CXØ10 K.GUENZEL | | |
| R | RLØ2-CXØØ8 K.GUENZEL | | |
| S | 7012130-CXØ11 K.GUENZEL | | |
| T | RLØ2-CXØ10 M. ZARICH | | |
| U | 7012130-CXØ12 D.C. 30 JUL 80 K.GUENZEL | | |
| V | 7012130-CXØ13 F. WALENTA | | |

| DESCRIPTION | DWG./PART NO. | ITEM NO. |
|---|---|---|
| | | |

UNLESS OTHERWISE SPECIFIED DIMENSIONS ARE IN INCHES

| ANGLES ±0° 30' | CLASS OF ACCURACY (CHECK ONE) | NOMINAL DIMENSION RANGE INCHES | | | | | |
|---|---|---|---|---|---|---|---|
| | | OVER 0 TO 0.2 | OVER 0.2 TO 1.2 | OVER 1.2 TO 4.0 | OVER 4.0 TO 12.0 | OVER 12.0 TO 40.0 | OVER 40.0 TO 80.0 |
| SURFACE QUALITY IN MICROINCHES | MEDIUM ☐ | ±.004 | ±.008 | ±.012 | ±.016 | ±.024 | ±.04 |
| | PREFERRED ☐ | ±.012 | ±.016 | ±.025 | ±.04 | ±.063 | ±0.1 |

QUANTITY & VARIATION

THIRD ANGLE PROJECTION

REMOVE BURRS AND BREAK SHARP CORNERS

DO NOT SCALE DWG

MATERIAL SEE PARTS LIST

FINISH —/—

| | | |
|---|---|---|
| DRN. | D. MELCHIOR | 12/AUG 77 |
| CHK'D | G. SCHNEIDER | 24/AUG 77 |
| ENG. | G. SCHNEIDER | 24/AUG 77 |
| PROJ. ENG. | R. ARNOLD | 30/AUG 77 |
| PROD. | R. RYLANDER | 30/AUG 77 |
| NEXT HIGHER ASSY. | E-UA-RLØ1-Ø-Ø | |
| SCALE: | 1/1 | |
| SHEET | 1 OF 3 | |

FIRST USED ON RLØ1

digital

TITLE POWER PANEL ASSY

| SIZE | CODE | NUMBER | REV. |
|---|---|---|---|
| D | AD | 7012130-0-0 | V |

DIST.

DEC FORM NO. DRD 100-C

NOTES:

1. INPUT VOLTAGE 50 OR 60 HZ
   90 – 110, 105 – 128 VAC
   180 – 220, 210 – 256 VAC
2. OUTPUT VOLTAGE ± 11.5 VDC MIN AT MIN POINT OF THE RIPPLE. 18 VDC MAX AT HIGH LINE. (MAX OF 25 VDC AT HIGH LINE NO LOAD).
3. OUTPUT CURRENT: POSITIVE OUTPUT
   2.5 AMP CONTINUOUS
   3.5 AMP PULSE "25 MS"
   NEGATIVE OUTPUT
   .25 AMP CONTINUOUS
   3.5 AMP PULSE "25 MS"
   PULSE CURRENT ON ALTERNATE OUTPUT AT A 65 MS OUT CYCLE.
4. OUTPUT RIPPLE AT 110 VOLTS
   A. NO LOAD 100 MV P/P
   B. +2.5 A 600 MV P/P
      -.25 A 300 MV P/P
   C. +2.5 A 600 MV P/P
      -3.75 A 1.5 V DURING PULSE
   RIPPLE AT 90 V RMS
   +2.5 A 500 MV
   -3.75 A 2 V
   +6 A 900 MV
   -.25 A 400 MV
5. HIGH POT TEST PER UL 478
   CONNECT BOTH AC LEADS TO THE POSITIVE TERMINAL OF THE SUPPLY AND GRN WIRE GROUND TO THE NEGATIVE TERMINAL OF THE SUPPLY. CLOSE CIRCUIT BREAKER AND INCREASE VOLTAGE TO 1750 VDC, ANY CURRENT INDICATES FAILURE.

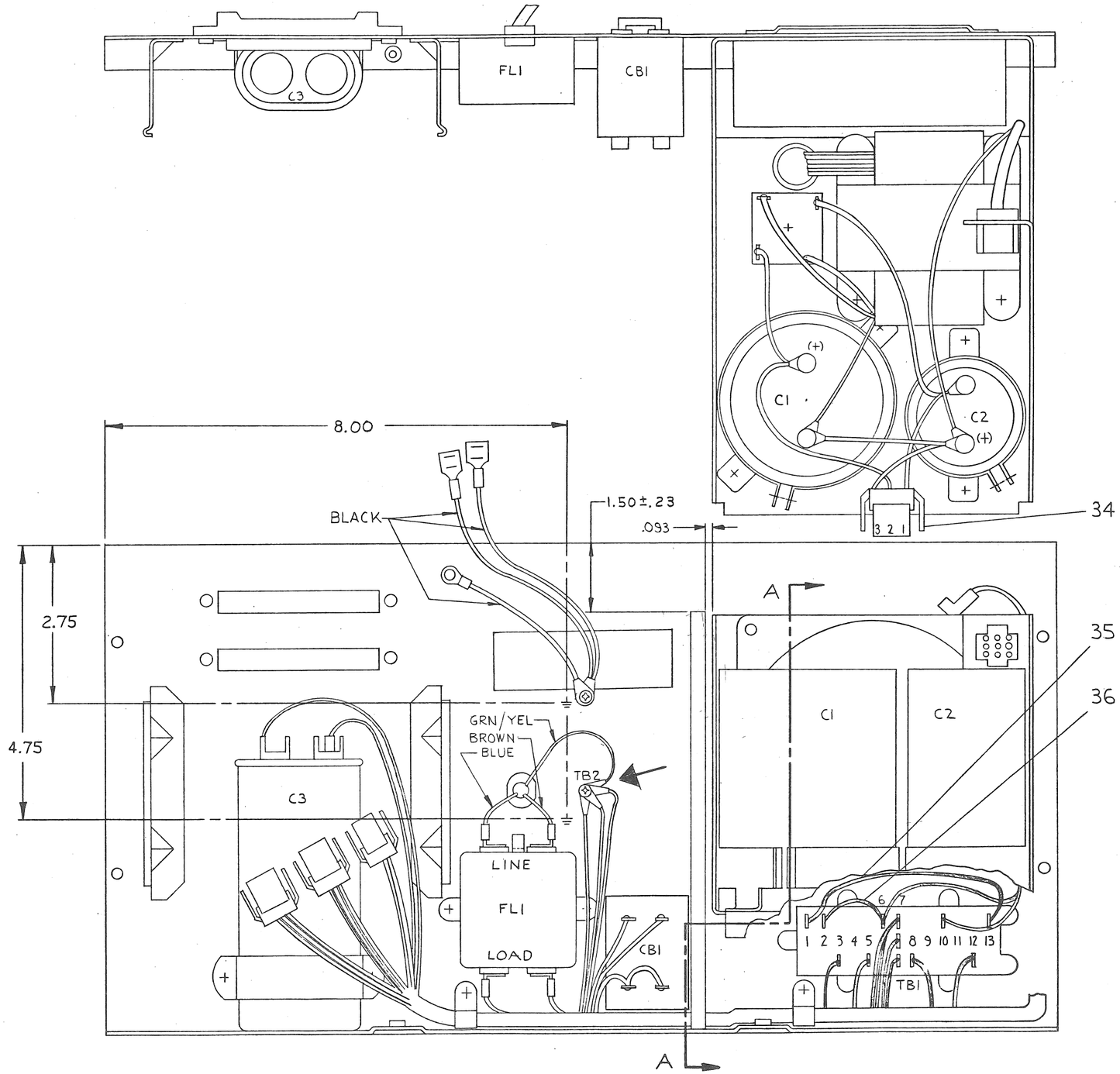


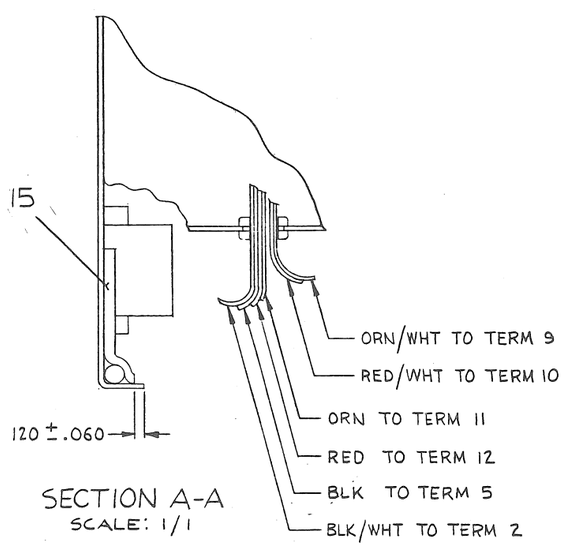


SECTION A-A
SCALE: 1/1

| REVISIONS | | |
|---|---|---|
| CHK | CHANGE NO. | REV. |

| TITLE | SIZE | CODE | NUMBER | REV. |
|---|---|---|---|---|
| POWER PANEL ASSY. | D | AD | 7012130-0-0 | V |
| SCALE: 1/1 SHEET 2 OF 3 | DIST. | | | |

DEC FORM NO. DRD 137

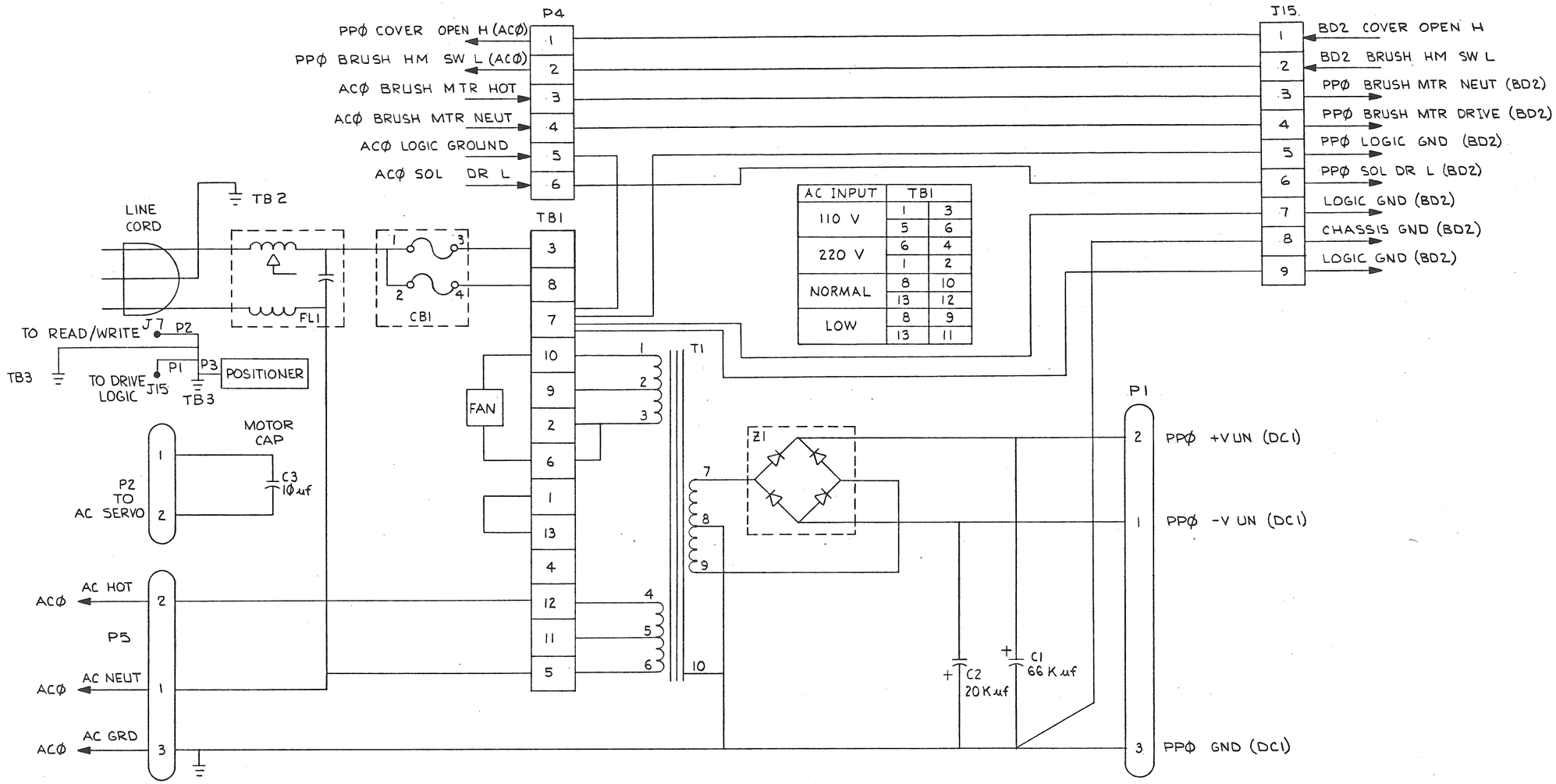


| AC INPUT | TB1 | |
|---|---|---|
| 110 V | 1 | 3 |
| | 5 | 6 |
| 220 V | 6 | 4 |
| | 1 | 2 |
| NORMAL | 8 | 10 |
| | 13 | 12 |
| LOW | 8 | 9 |
| | 13 | 11 |

→ VALID FOR REV V AND FOR REV V1

| REVISIONS | | |
|---|---|---|
| CHK | CHANGE NO. | REV. |

| TITLE | SIZE | CODE | NUMBER | REV. |
|---|---|---|---|---|
| POWER PANEL ASSY (PPO) | D | AD | 7012130-0-0 | V |
| SCALE: 1/1 | SHEET 3 OF 3 | DIST. | | |

DEC FORM NO. MRD 137

AUTOMATED BY PRTLST.3P(44) — P A R T S  L I S T — SHEET A1 OF A2

| LINE | ITEM | DOCUMENT NUMBER | PART NUMBER | DESCRIPTION | QUANTITY PER VARIATION 00 |
|---|---|---|---|---|---|
| 1 | 1 | | 9006070-01 | SCREW,PAN,PHIL 10-32X 5/16 SS | 4 |
| 2 | 2 | D-IA-7416326-0-0 | 7416326-00 | CHASSIS | 1 |
| 3 | 3 | | 9006028-01 | SCREW,PAN,PHIL 6-32X1 SS | 1 |
| 4 | 4 | C-AD-7012127-0-0 | 7012127-00 | CHASSIS ASSY | 1 |
| 5 | 5 | | 9008072-00 | WASHER, LOCK, EXTERNAL TOOTH #8 | 4 |
| 6 | 6 | | 1210430-00 | BRACKET,CAPACITOR,2" | 1 |
| 7 | 7 | | 1210431-00 | BRACKET,CAPACITOR,3-1/16" | 1 |
| 8 | 8 | | 1213156-01 | BRACKET,CAPACITOR,WRAP-AROUND | 1 |
| 9 | 9 | | 9007016-00 | GROMMET, RUBBER | 1 |
| 10 | 10 | | 1213683-00 | BOOT,CAPACITOR,RUBBER | 1 |
| 11 | 11 | | 9007113-00 | *** THIS ITEM IS NOT USED *** | - |
| 12 | 12 | | 9009768-01 | BUSHING,STRAIN RELIEF .280-.393W | 1 |
| 13 | 13 | | 9007082-00 | CLAMP,CABLE,SCREW MTD. 5/16" | 3 |
| 14 | 14 | | 9009800-01 | SCREW,PAN,PHILLIPS, 6X7/8 SELF- | 4 |
| 15 | 15 | | 9009059-01 | TAPE,FOAM, 1/2W X 1/4THK W/ ADH | A/R |
| 16 | 16 | | 9006020-01 | SCREW,PAN,PHIL 6-32X 1/4 SS | 12 |
| 17 | 17 | | 9006023-01 | SCREW,PAN,PHIL 6-32X 7/16 SS | 3 |
| 18 | 18 | | 9006036-01 | SCREW,PAN,PHIL 8-32X 5/16 SS | 4 |
| 19 | 19 | | 9006027-01 | SCREW,PAN,PHIL 6-32X 7/8 SS | 3 |
| 20 | 20 | | 1013102-00 | 10 MFD 370VAC 6% PAPER/OIL | 1 |
| 21 | 21 | D-IA-7012108-0-0 | 7012108-00 | POWER PANEL HARNESS | 1 |
| 22 | 22 | | 1215360-00 | FILTER,LINE,115/250V,47-400HZ, F | 1 |
| 23 | 23 | | 9006633-00 | WASHER,LOCK,INT,.2800D X .146ID | 11 |
| 24 | 24 | | 1216827-00 | CKT BKR 2.5 A 250V 2P MAGNETIC | 1 |
| 25 | 25 | | 1209403-01 | FAN,115CFM,SLEEVE BRNG | 1 |
| 26 | 26 | B-IA-7012110-0-0 | 7012110-00 | HARNESS AC-TB | 1 |
| 27 | 27 | | 1210263-00 | GUARD,FINGER 4.125 X 4.125 MTG H | 1 |
| 28 | 28 | | 1613897-00 | XFMR P=AB S=11.5@6A | 1 |
| 29 | 29 | | 1110051-00 | DM 16 ASSY@200V & 25A #990-3 | 1 |
| 30 | 30 | | 1013530-00 | 66,000 MFD 30V +75-10% AL EL | 1 |

| REVISION HISTORY | | | |
|---|---|---|---|
| ENG | ECO NUMBER | REV | |
| KG | 7012130-CX010 | P | |
| KG | RL02-CX008 | R | [A] 00 |
| KG | 7012130-CX011 | S | |
| MZ | RL02-CX010 | T | [B] |
| KG | 7012130-CX012 | U | |
| IW | 7012130-CX013 | V | [C] |
| | Dan Noecker 12-5-80 | | [D] |
| | | | [E] |
| | | | [F] |

BASIC PART NO: 0RL01

SECTION A OF A

SECTION. VARIATION INDEX

DRN: D. MELCHOIR — DATE: 12-AUG-76

CHK'D: G. SCHNEIDER — DATE: 24-AUG-77

DES.ENG.: G. SCHNEIDER — DATE: 24-AUG-77

RESP.ENG.: P. ARNOLD — DATE: 30-AUG-77

MFG.ENG.: B. RYLANDER — DATE: 30-AUG-77

ASSEMBLY NUMBER: D-AD-7012130-0-0

TOP DOCUMENT NUMBER: # B-DD-RL02-0

TITLE: PARTS LIST — POWER PANEL ASSEMBLY

| D | I | G | I | T | A | L |
|---|---|---|---|---|---|---|
| | | | | | | |

| DOCUMENT NUMBER | | | | |
|---|---|---|---|---|
| SIZE | CODE | NUMBER | REV | |
| K | PL | 7012130-0-DBP | V | |

FILE NAME: Z0849V.PLS — EDIT #: 17



AUTOMATED BY PRTLST.3P(44) — P A R T S  L I S T — SHEET A2 OF A2

| LINE | ITEM | DOCUMENT NUMBER | PART NUMBER | DESCRIPTION | QUANTITY PER VARIATION 00 |
|---|---|---|---|---|---|
| 31 | 31 | | 1013531-00 | 20,000 MFD 40V +75-10% AL EL | 1 |
| 32 | 32 | B-IA-7012109-0-0 | 7012109-00 | POWER HARNESS | 1 |
| 33 | 33 | | 9006560-00 | NUT,KEP , 6-32 X5/16AF | 6 |
| 34 | 34 | C-IA-7012142-0-0 | 7012142-00 | CABLE | 1 |
| 35 | 35 | B-IA-7012125-0-0 | 7012125-0E | INTERCONNECT CABLE | 1 |
| 36 | 36 | B-IA-7012125-0-0 | 7012125-0B | TB INTERCONNECTOR HARNESS | 1 |
| 37 | 37 | | 9006653-00 | WASHER, FLAT, .375 O.D. X .156 I | 7 |
| 38 | 38 | | 9009800-06 | SCREW,PAN,PHILLIPS, 6X.38 | 3 |
| 39 | 39 | | 9006635-00 | WASHER,LOCK,INT,.3100D X .200ID | 4 |
| 40 | 40 | | 9007649-00 | WASHER, LOCK, EXTERNAL TOOTH #6 | 8 |
| 41 | 41 | | 9006021-01 | SCREW,PAN,PHIL 6-32X 5/16 SS | 4 |
| 42 | 42 | | 1211591-35 | CONN,ZIF 40PIN RCPT ASSY | 2 |
| 43 | 43 | | 1211591-38 | CONN,ZIF 40PIN RCPT,SWAP IN GU | 4 |
| 44 | 44 | | 9008301-01 | SCREW,PAN,PHIL 4-40X 1/4 SS | 4 |
| 45 | 45 | B-IA-7017609-0-0 | 7017609-00 | GROUND HARNESS | 1 |
| 46 | 46 | C-IA-7017608-0-0 | 7017608-00 | GROUND HARNESS | 1 |
| 47 | 47 | | 9009255-00 | LABEL, POWER SUPPLY, 2-15/16 " L | 1 |
| 48 | 48 | | 3612680-00 | DECAL, GROUND SIGN PER 3E6 * | 2 |

TITLE: POWER PANEL ASSEMBLY — SECTION A OF A

| SIZE | CODE | DOCUMENT NUMBER | REV |
|---|---|---|---|
| K | PL | 7012130-0-DBP | V |

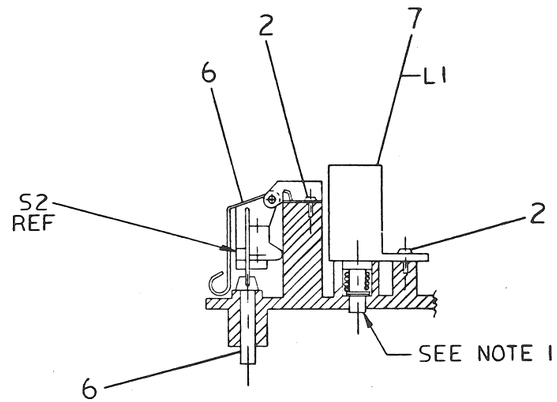


SECTION A-A

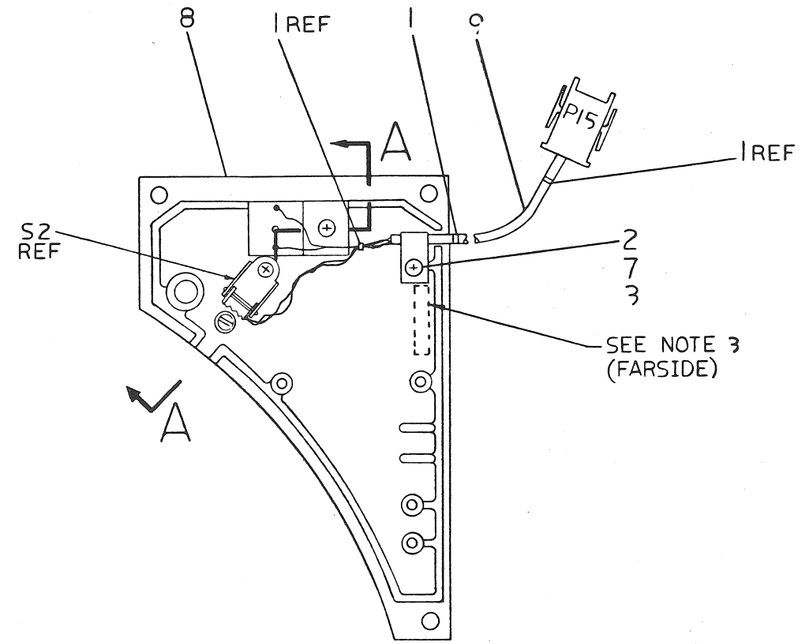


NOTES:

1. PLUNGER OF SOLENOID, COVER LOCK (ITEM 5) MUST MOVE FREELY. WHEN ASSEMBLY IS POSITIONED IN "UP" POSITION (TIP OF PLUNGER POINTING UP) A D C VOLTAGE OF 6.9 VOLTS SHALL PULL THE PLUNGER DOWN.
2. CONNECT LEADS OF SOLENOID, COVER LOCK (ITEM 5) TO PINS 6 & 7 OF CONNECTOR BODY (P15). DRESS WIRES AND TIE TO COVER, SWITCH HARNESS (ITEM 9) WITH TIE, CABLE (ITEM 1) AS SHOWN.
3. PART TO BE MARKED WITH PART NO. (7016991-00) AND LATEST REVISION LETTER IN AREA SHOWN (FARSIDE).

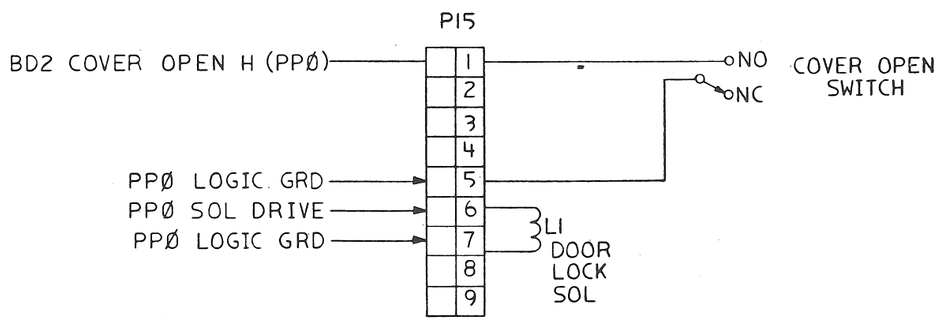


CIRCUIT SCHEMATIC

CAUTION: OFF SHEET PARTS LISTS EXISTS.
SEE K-PL-7016991-0-DBP (Z0984).

| REV. | ECO NUMBER | DATE |
|---|---|---|
| * | RELEASED TO ECO CONTROL PER ECO RLØ1-0582 (XMAS) AT REV * K.D. 10 OCT 80 K. GUENZEL | |

| DESCRIPTION | DRAWING NO. | PART NO. | ITEM NO. |
|---|---|---|---|

UNLESS OTHERWISE SPECIFIED DIMENSIONS ARE IN INCHES AND THE FOLLOWING TOLERANCES APPLY (PER DEC STD 114)

| INCHES TOLERANCES | ANGLES ±0°30' | APPLICABLE DIMENSION RANGE (CHECK ONE) | DIMENSION RANGE IN INCHES: OVER 0 TO 0.2 | OVER 0.2 TO 1.2 | OVER 1.2 TO 4.0 | OVER 4.0 TO 12.0 | OVER 12.0 TO 40.0 | OVER 40.0 TO 60.0 |
|---|---|---|---|---|---|---|---|---|
| .X = ± .1 | SURFACE QUALITY | ☐ | ± .02 | | ± .03 | ± .05 | ± .10 | |
| .XX = ± .02 | | ☐ | ± .004 | ± .008 | ± .012 | ± .016 | ± .024 | ± .04 |
| .XXX = ± .005 | MICROINCHES | ☐ | | | | | | |

QUANTITY & VARIATION

THIRD ANGLE PROJECTION

DO NOT SCALE DRAWING

REMOVE BURRS AND BREAK SHARP CORNERS

MATERIAL: SEE PARTS LIST

FINISH: —/—/—

| | | DATE |
|---|---|---|
| DRN | K. Guenzel | 10 OCT 80 |
| CHK | R. Nichols | 22 OCT 80 |
| DES ENG | Jean Hoenig | 22 OCT 80 |
| RESP ENG | Jean Hoenig | 22 OCT 80 |
| MFG ENG | [illegible] | |
| NEXT HIGHER DOC | E-UA-RLØ1-Ø-Ø | |

TITLE: SWITCH COVER ASSY

digital

DOCUMENT NUMBER: SIZE D, CODE AD, NUMBER 7016991-0-0, REV. *

SCALE 1/1 SHEET 1 OF 1

DRD 1000

AUTOMATED BY PRTLST.3L(40)

# P A R T S  L I S T



| LINE | ITEM | DOCUMENT NUMBER | PART NUMBER | DESCRIPTION | QUANTITY PER VARIATION 00 |
|---|---|---|---|---|---|
| 1 | 1 | | 9007031-00 | TIE,CABLE BUNDL.DIA 0- 3/4'=101 | 3 |
| 2 | 2 | | 9009800-06 | SCREW,PAN,PHILLIPS, 6X.38 | 3 |
| 3 | 3 | | 9007081-00 | CLAMP,CABLE,SCREW MTD. 1/4' | 1 |
| 4 | 4 | C-AD-7012132-0-0 | 7012132-00 | CARTRIDGE SENSE SWITCH ASSY. | 1 |
| 5 | 5 | C-PS-1213204-0-0 | 1213204-00 | SOLENOID,COVER LOCK | 1 |
| 6 | 6 | B-MD-7416858-0-0 | 7416858-00 | CART SENSE PLUNGER | 1 |
| 7 | 7 | | 9006653-00 | WASHER, FLAT, .375 O.D. X .156 I | 1 |
| 8 | 8 | E-IA-7415224-0-0 | 7415224-00 | COVER BRUSH DRIVE | 1 |
| 9 | 9 | C-IA-7017333-0-0 | 7017333-00 | COVER, SWITCH HARNESS | 1 |

| REVISION HISTORY | | | BASIC PART NO: 7016991 | | | |
|---|---|---|---|---|---|---|
| ENG | ECO NUMBER | REV | SECTION A OF A | DRN: K. DAVIS | DATE: 1 OCT 80 | D I G I T A L |
| KG | RL01-CX048 | * | SECTION, VARIATION INDEX | CHK'D: D. MILLER | DATE: 20 OCT 80 | TITLE PARTS LIST |
| | W. MAJOR ROE K. GUENZEL | | [A] 00 | DES.ENG.: K. GUENZEL | DATE: 22 OCT 80 | SWITCH COVER ASSY |
| | | | [B] | RESP.ENG.: I. WALENTA | DATE: 22 OCT 80 | DOCUMENT NUMBER |
| | | | [C] | MFG.ENG.: J. BLAND | DATE: 22 OCT 80 | SIZE K / CODE PL / NUMBER 7016991-0-DBP / REV * |
| | | | [D] | ASSEMBLY NUMBER: D-AD-7016991-0-0 | TOP DOCUMENT NUMBER: #B-DD-RL01-0 | FILE NAME: Z0984*.PLS / EDIT # 6 |
| | | | [E] | | | |
| | | | [F] | | | |

COMPONENT SIDE VIEW

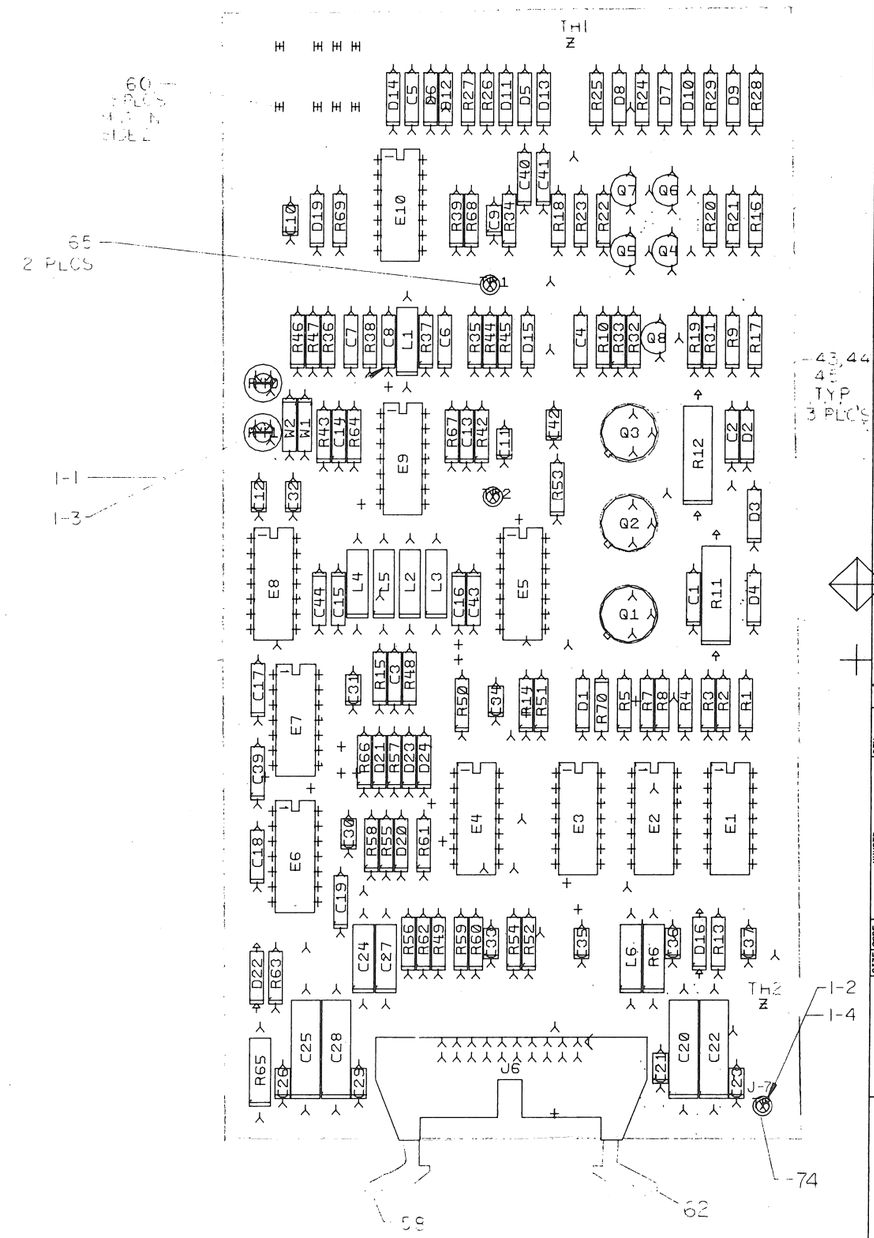


NOTES:

| CHK | CHANGE NO | REV |
|---|---|---|
| | 5413536-CX001 M.ZARICH | B |

ETCH REV. B
P.C. DESIGN DATA BASE REV. BL

| SIGNATURES | DATE |
|---|---|
| DRN. | |
| CHK'D. | |
| ENG. | |
| PROJ.ENG. | |
| PROD. | |
| SCALE 2/1 | |
| SHT. 1 OF 2 | |

digital

TITLE RL02 READ/WRITE BOARD

| SIZE | CODE | NUMBER | REV |
|---|---|---|---|
| D | UA | 5413536-0-0 | B |

NEXT HIGHER ASSY. B-DD-5413536-0

AUTOMATED BY PRTLST.2E(3) — PARTS LIST — SHEET A1 OF A2

| LINE | ITEM | DOCUMENT NUMBER | PART NUMBER | DESCRIPTION | QTY PER VARIATION XOO | REFERENCE DESIGNATOR |
|---|---|---|---|---|---|---|
| 1 | 1 | D-MD-5013535-0-0 | 5013535-00 | ETCHED CIRCUIT BD | 1 | |
| 2 | 2 | | 1001610-00 | .01 MFD 50V -20+80 Z5U AXIAL | 17 | C9-C12,C21,C23,C26,C29-C37,C42 |
| 3 | 3 | | 1005306-00 | 6.8MFD 35V 10% S.TANT | 4 | C20,C22,C25,C28 |
| 4 | 4 | | 1013466-14 | 82.0 MMF 50V 5% CER | 2 | C16,C43 |
| 5 | 5 | | 1013466-06 | 100.0 MMF 50V 5% CER. | 1 | C8 |
| 6 | 6 | | 1013466-05 | 56.0 MMF 50V 5% CER. | 1 | C5 |
| 7 | 7 | | 1013466-07 | 220.0 MMF 50V 5% CER. | 5 | C1,C2,C4,C17,C39 |
| 8 | 8 | | 1013466-09 | 1000.0 MMF 50V 10% CER. | 1 | C18 |
| 9 | 9 | | 1013466-11 | .22 MFD 50V +80/-20% CER. | 2 | C24,C27 |
| 10 | 10 | | 1013466-15 | 1200.0 MMF 50V 5% CER. | 3 | C19,C40,C41 |
| 11 | 11 | | 1109943-00 | IN 4733A VZ= 5.1 5% 1W Y | 2 | D16,D22 |
| 12 | 12 | | 1113953-00 | IN 5523D VZ= 5.1 1% | 1 | D1 |
| 13 | 13 | | 1100122-00 | IN 748A VZ= 3.9 5% | 1 | D19 |
| 14 | 14 | | 1111577-00 | IN 4454 TR= 4NS PIV= 50 S | 11 | D5-D10,D15,D20,D21,D23,D24 |
| 15 | 15 | | 1300250-00 | 150.0 .25 W 5.0 % CC | 1 | R5 |
| 16 | 16 | | 1300239-00 | 100.0 .25 W 5.0 % CC | 5 | R39,R52,R54-R59,R69 |
| 17 | 17 | | 1300232-00 | 100.0 1.0 W 5.0 % CC | 2 | R11,R12 |
| 18 | 18 | | 1300247-00 | 120.0 .25 W 5.0 % CC | 1 | R56 |
| 19 | 19 | | 1300345-00 | 1.0 K .25 W 5.0 % CC | 9 | R13,R14,R35,R36,R48,R47,R66,R70 |
| 20 | 20 | | 1300444-00 | 3.90 K .25 W 5.0 % CC | 1 | R46 |
| 21 | 21 | | 1300447-00 | 4.70 K .25 W 5.0 % CC | 3 | R9,R10,R32 |
| 22 | 22 | | 1301775-00 | 820.0 .25 W 5.0 % CC | 1 | R31 |
| 23 | 23 | | 1301317-00 | 10.0 .25 W 5.0 % CC | 1 | R63 |
| 24 | 24 | | 1302612-00 | 1.78 K 1/4W 1% RN55D-F 100PPM | 2 | R50,R51 |
| 25 | 25 | | 1300195-00 | 33.0 .50 W 5.0 % CC | 2 | R6,R65 |
| 26 | 26 | | 1304725-00 | 300 1/4W 1% RN55D-F 100PPM | 1 | R62 |
| 27 | 27 | | 1312930-00 | 5.10 K .25 W 5.0 % CC | 2 | R55,R56 |
| 28 | 28 | | 1301424-00 | 680.0 .25 W 5.0 % CC | 4 | R16,R18,R21,R23 |
| 29 | 29 | | 1302391-00 | 20.0 K .25 W 5.0 % CC | 1 | R60 |
| 30 | 30 | | 1300426-00 | 2.70 K .25 W 5.0 % CC | 1 | R33 |

| REVISION HISTORY | | | BASIC PART NO: 13536 | | |
|---|---|---|---|---|---|
| ENG | ECO NUMBER | REV | SECTION A OF A | DRN: JERRY BEST | DATE: 14-AUG-78 |
| INIT | | A | SECTION.VARIATION INDEX | CHK'D: L. ROOHR | DATE: 14-AUG-78 |
| MZ | 5413536-CX001 | B | [A] 00 | | |
| | M. Zaeich W.C.M. 17 JAN 80 | | [B] | DES.ENG: B. NOGUCHI | DATE: |
| | | | [C] | | |
| | | | [D] | | |
| | | | [E] | | |
| | | | [F] | RESP.ENG.: B. NOGUCHI | DATE: 14-AUG-78 |
| | | | [H] | | |
| | | | [J] | | |
| | | | [K] | MFG.ENG.: P. CHURCH | DATE: |
| | | | [L] | | |
| | | | [M] | ASSEMBLY NUMBER: | TOP DOCUMENT NUMBER: |
| | | | [N] | D-UA-5413536-0-0 | RL02 |

TITLE: PARTS LIST — READ/WRITE BOARD

DOCUMENT NUMBER: SIZE K, CODE PL, NUMBER 5413536-0-DBP, REV B

FILE NAME: Z1091B.PLS — EDIT # 7



AUTOMATED BY PRTLST.2E(3) — PARTS LIST — SHEET A2 OF A2

| LINE | ITEM | DOCUMENT NUMBER | PART NUMBER | DESCRIPTION | QTY PER VARIATION XOO | REFERENCE DESIGNATOR |
|---|---|---|---|---|---|---|
| 31 | 31 | | 1302956-00 | 196 1/4W 1% RN55D-F 100PPM | 3 | R2,R3,R4 |
| 32 | 32 | | 1300439-00 | 3.30 K .25 W 5.0 % CC | 2 | R20,R22 |
| 33 | 33 | | 1305143-00 | 825 1/4W 1% RN55D-F 100PPM | 2 | R44,R45 |
| 34 | 34 | | 1303303-00 | 2.61 K 1/4W 1% RN55D-F 100PPM | 4 | R24,R25,R28,R29 |
| 35 | 35 | | 1302645-00 | 1.1 K 1/4W 1% RN55D-F 100PPM | 1 | R61 |
| 36 | 36 | | 1301477-00 | 82.0 .25 W 5.0 % CC | 1 | R68 |
| 37 | 37 | | 1301322-00 | 180.0 .25 W 5.0 % CC | 2 | R37,R38 |
| 38 | 38 | | 1313469-00 | 240.0 .25 W 5.0 % CC | 1 | R34 |
| 39 | 39 | | 1303045-00 | 3.16 K 1/4W 1% RN55D-F 100PPM | 2 | R26,R27 |
| 40 | 40 | | 1501913-00 | 2N 2904A PNP 600MW SI 60 40 Y | 3 | Q1-Q3 |
| 41 | 41 | | 1513489-00 | 2N 4401 NPN 350MW SI 40 20 | 3 | Q6-Q8 |
| 42 | 42 | | 1513490-00 | 2N 4403 PNP 350MW SI-40 30 | 2 | Q4,Q5 |
| 43 | 43 | | 1210001-00 | HEAT SINK BLACK | 3 | |
| 44 | 44 | | 9007201-00 | TRANSIPADS $10253 | 3 | |
| 45 | 45 | | 9008268-00 | COMPOUND, THERMAL JOINT $ | A/R | |
| 46 | 46 | | 1611257-01 | CHOKE(CERAMIC BEAD)AXIAL LEAD,ON | 1 | L6 |
| 47 | 47 | | 1613898-01 | 33.0 UH INDUCTOR | 4 | L2-L5 |
| 48 | 48 | | 1613898-02 | 39.0 UH INDUCTOR | 1 | L1 |
| 49 | 49 | | 1910268-00 | DEC 75107B RECEIVER,LINE,DUAL, | 1 | E8 |
| 50 | 50 | | 1909686-00 | 7404 INVERTER GATE-HEX 1I | 1 | E3 |
| 51 | 51 | | 1910544-00 | 74S74 FF-D DUAL,EDGE TRIGG | 1 | E2 |
| 52 | 52 | | 1910644-00 | 733 DIFFERENTIAL AMP,WID | 2 | E9,E10 |
| 53 | 53 | | 1910741-00 | 7406 INVERTER GATE-HEX 1I | 1 | E7 |
| 54 | 54 | | 1911521-00 | 7432 OR GATE-QUAD 2IN, PO | 1 | E1 |
| 55 | 55 | | 1910268-01 | DEC 75107B-01 RECEIVER,LINE,DUA | 2 | E5,E4 |
| 56 | 56 | | 1910725-00 | 75108B RECEIVER,LINE,DUAL, | 1 | E6 |
| 57 | 57 | | 1209941-06 | HEADER,100 20POS RT ANGLE | 1 | J6 |
| 58 | 58 | | 1209941-03 | HEADER RT ANGLE LEFT L | 1 | |
| 59 | 59 | | 1209941-04 | HEADER RT ANGLE,RIGHT | 1 | |
| 60 | 60 | | 1210385-01 | PIN 1POS WIRE WRAP | 8 | |
| 61 | 61 | | 9007791-00 | TERM PCB 2POS SOLDER,TUKRET | 2 | TP1,TP2 |
| 62 | 62 | | 1303047-00 | 422 1/4W 1% RN55D-F 100PPM | 2 | R42,R43 |
| 63 | 63 | | 1300219-00 | 68.0 .25 W 5.0 % CC | 4 | R7,R8,R47,R57 |
| 64 | 64 | | 1301423-00 | 6.80 K .25 W 5.0 % CC | 3 | R15,R64,R67 |
| 65 | 65 | | 1300391-00 | 1.50 K .25 W 5.0 % CC | 2 | R17,R19 |
| 66 | 66 | | 1114117-00 | IN 4152 PIV=450 I=75M | 3 | D2-D4 |
| 67 | 67 | | 1113003-00 | IN 5282 PIV=55 I=500M DO35 | 4 | D11-D14 |
| 68 | 68 | | 1015573-01 | 5600.0 MMF 50V 5% CER. $ | 5 | C3,C6,C7,C13,C14 |
| 69 | 69 | | 1304857-00 | 237 1/4W 1% RN55D-F 100PPM | 1 | R1 |
| 70 | 70 | | 1300309-00 | 390.0 .25 W 5.0 % CC | 1 | R53 |
| 71 | 71 | | 1013466-17 | 150 MMF 50V 5% CER | 2 | C15,C44 |
| 72 | 72 | | 1309150-07 | 2 K 1/2W10% POT 100PPM | 2 | R40,R41 |
| 73 | 73 | | 9009185-00 | JUMPER, WIRE, INSULATED, BLACK B | 2 | W1,W2 |
| 74 | 74 | | 1217377-00 | TERM QUICK 1POS TAB PC MNT | 1 | J7 |

UNDERGOING CHANGE

| D | I | G | I | T | A | L | TITLE | SECTION A OF A | SIZE | CODE | DOCUMENT NUMBER | REV |
|---|---|---|---|---|---|---|---|---|---|---|---|---|
| | | | | | | | READ/WRITE BOARD | | K | PL | 5413536-0-DBP | B |

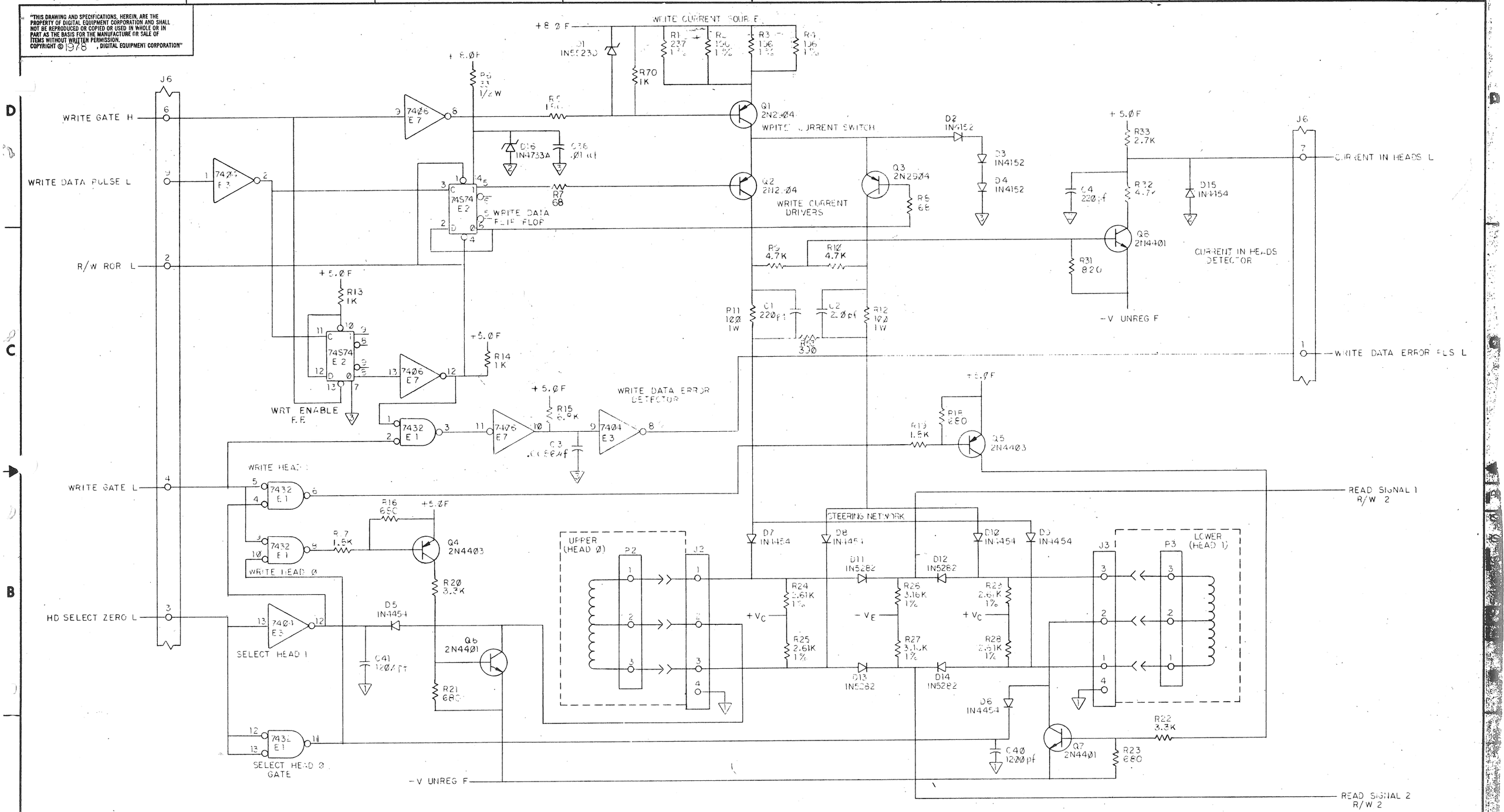


NOTE
1. FOR RLO1 CUT W2 AND LEAVE IN W1.
FOR RLO2 CUT W1 AND LEAVE IN W2.

| | | |
|---|---|---|
| DRN. B. Nichols | 4/6/78 | FIRST USED ON RLO2 |
| CHK'D L. Rosin | 5/8/78 | digital |
| ENG. R. Zajac | 5/18/78 | TITLE READ / WRITE BOARD |
| PROJ. ENG. | 6/6/78 | |
| PROD. P. Church / J. Bowman | 9/27/78 | |
| NEXT HIGHER ASSY. | | |
| SCALE — | | SIZE D · CODE CS · NUMBER 5413536-0-1 · REV. B |
| SHEET 1 OF 2 | | DIST. |

| REVISIONS | | |
|---|---|---|
| CHANGE NO. | 5413536-CX001 | B |
| CHK | M. ZARICH | |

MASTERPIECE

DEC FORM NO. DBD 108-0

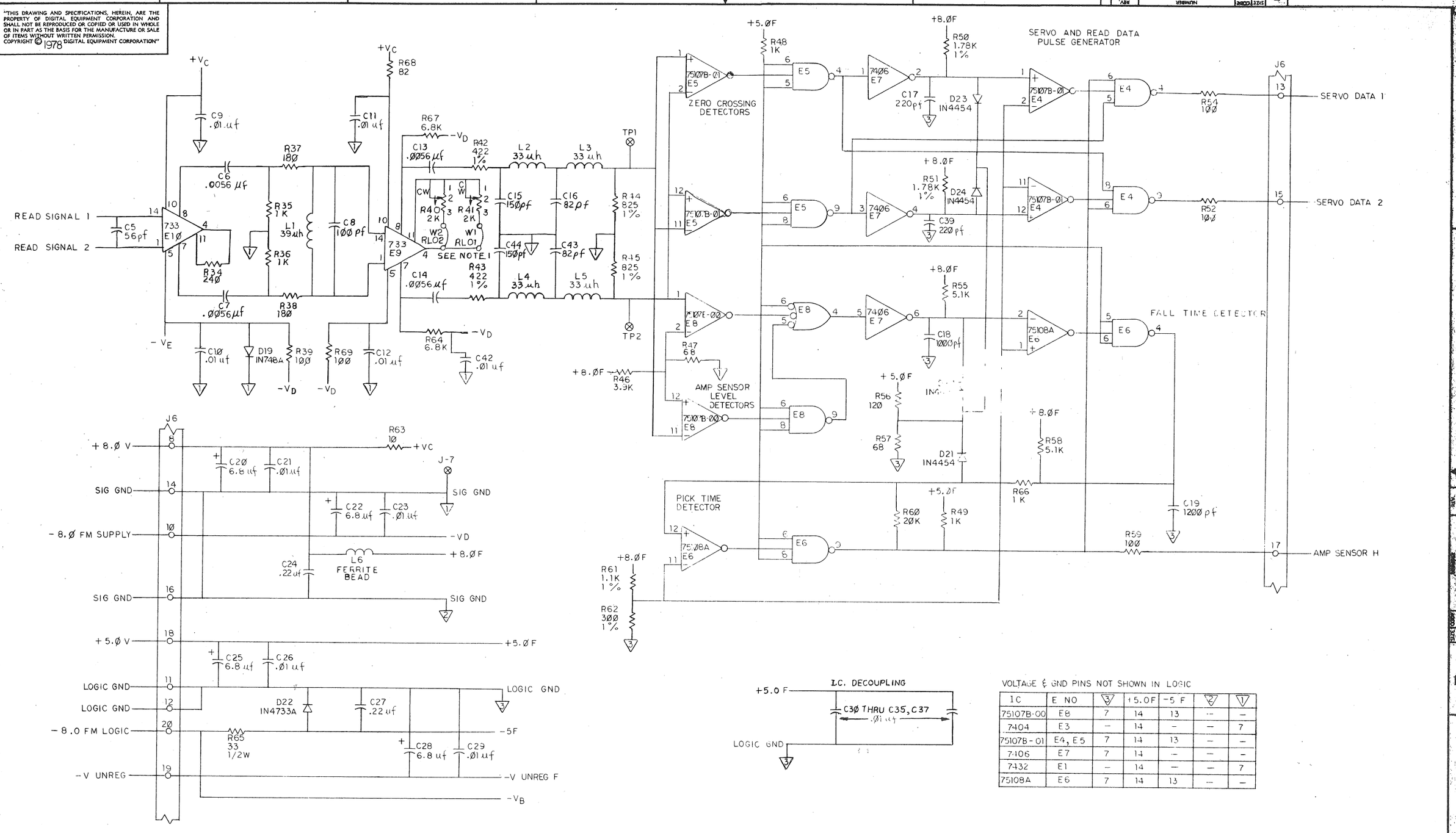


VOLTAGE & GND PINS NOT SHOWN IN LOGIC

| IC | E NO | 3 | +5.0F | -5 F | 2 | 1 |
|---|---|---|---|---|---|---|
| 75107B-00 | E8 | 7 | 14 | 13 | – | – |
| 7404 | E3 | – | 14 | – | – | 7 |
| 75107B-01 | E4, E5 | 7 | 14 | 13 | – | – |
| 7406 | E7 | 7 | 14 | – | – | – |
| 7432 | E1 | – | 14 | – | – | 7 |
| 75108A | E6 | 7 | 14 | 13 | – | – |

| REVISIONS | | |
|---|---|---|
| CHK | CHANGE NO. | REV. |

TITLE READ/WRITE BOARD
SIZE D CODE CS NUMBER 5413536-0-1 REV. B
SCALE —/—/— SHEET 2 OF 2 DIST.

DEC FORM NO. DRD 188

COMPONENT SIDE VIEW

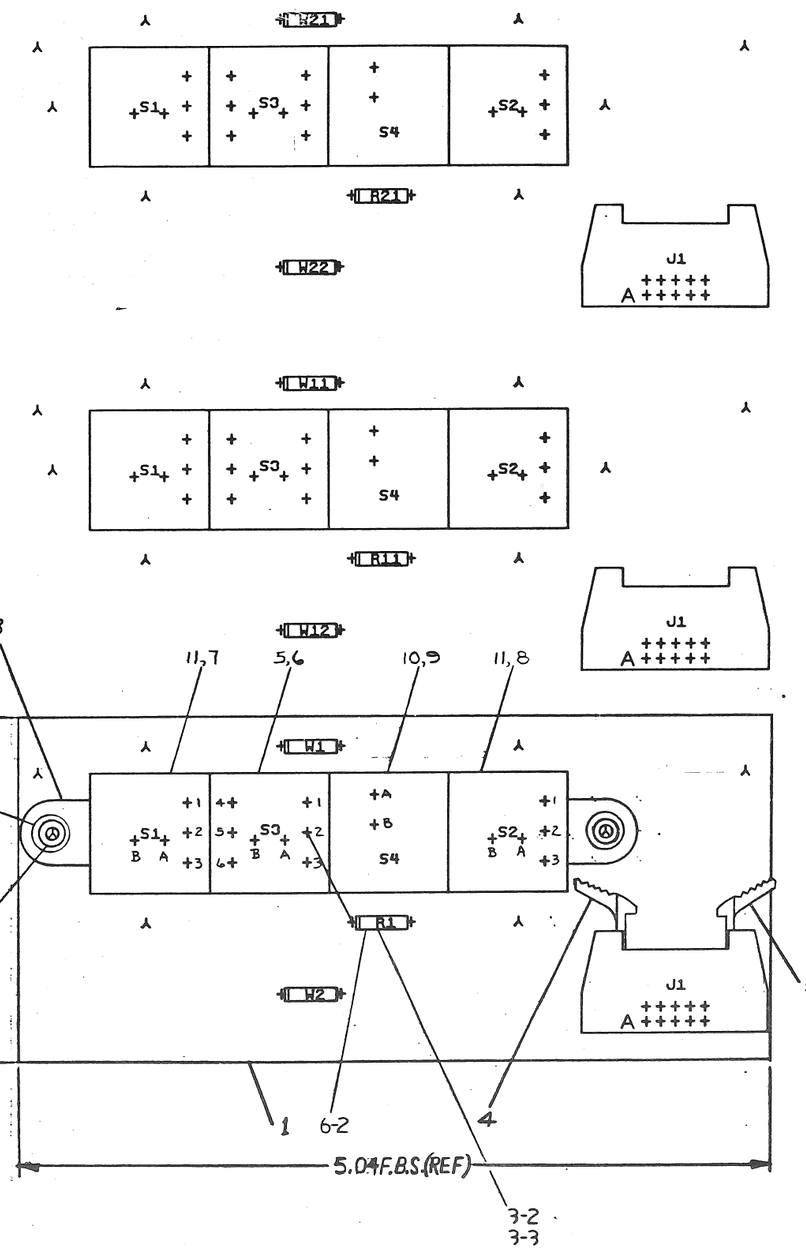


NOTES:

1. ALL MANUFACTURING INFORMATION, DATE CODE, CIRCUIT SCHEMATIC REV, QUALITY CONTROL STAMPS, ETC. ARE TO BE STAMPED ON ETCH SIDE (SIDE 2) OF MODULE.

| CHK | CHANGE NO | REV |
|---|---|---|
| 2B 7-28-71 | 5411846-0001 | E |
| 633 11 OCT 78 | 5411846-CX005 D.C. 4AUG80 M ZARICH | H |
| 635 EPM 7 OCT 80 | 5411846-CX006 D.C.29SEP80 M.ZARICH | J |

ETCH REV. D
P.C. DESIGN DATA BASE REV. D

| SIGNATURES | DATE |
|---|---|
| DRN. MRipley | 11/5/76 |
| CHK'D. B Burnell | 1-11-77 |
| ENG. | |
| PROJ.ENG. | 3/14/77 |
| PROD. | |
| SCALE 2/1 | |
| SHT. 1 OF 3 | |
| NEXT HIGHER ASSY. B-DD-5411846-0 | |

digital

TITLE FRONT PANEL

| SIZE | CODE | NUMBER | REV |
|---|---|---|---|
| D | UA | 5411846-0-0 | J |

MS#

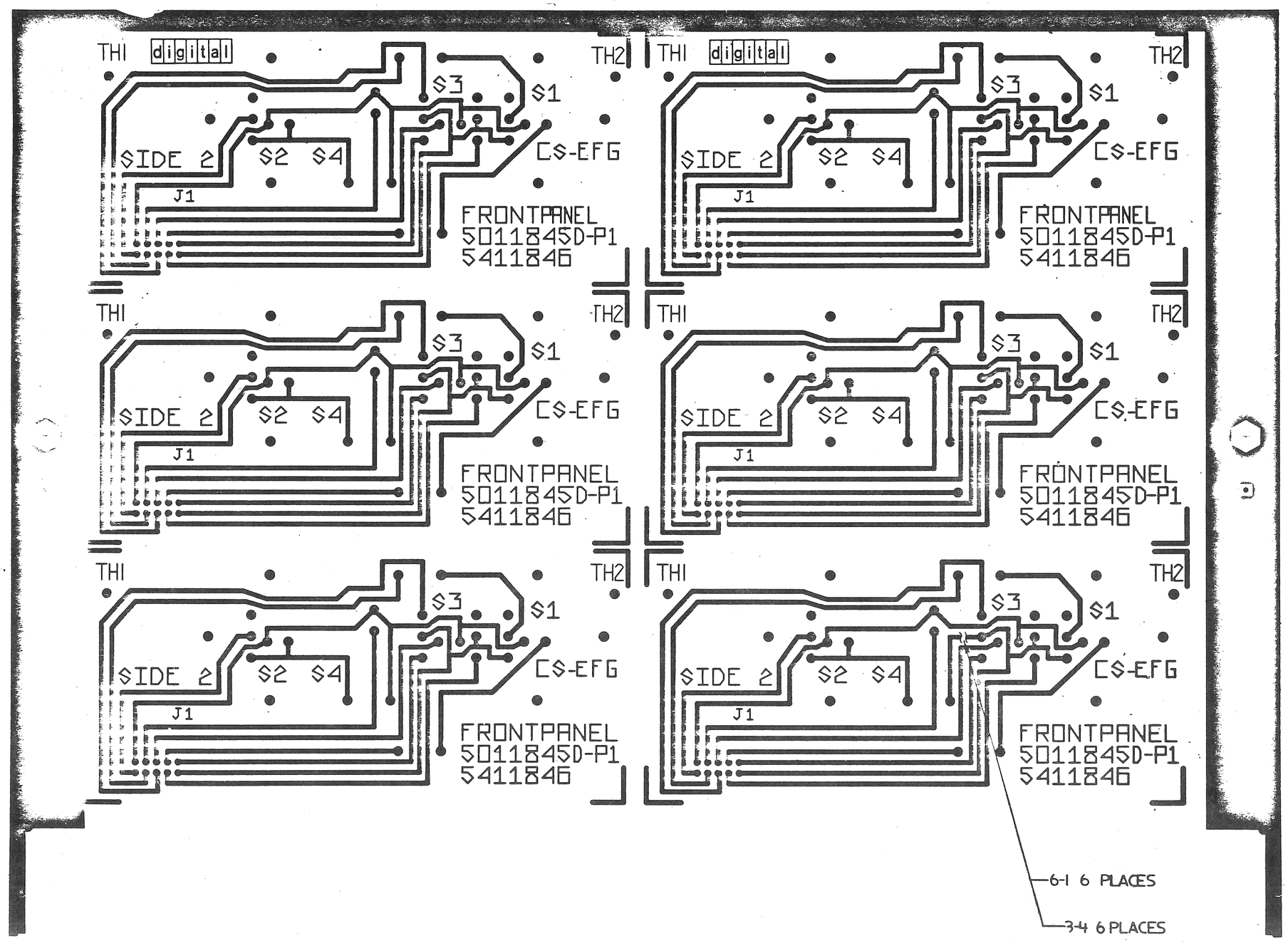


| REVISIONS | | |
|---|---|---|
| CHK | CHANGE NO | BY |

| TITLE | SIZE | CODE | NUMBER | REV. |
|---|---|---|---|---|
| FRONT PANEL | D | UA | 5411846-0-0 | J |
| SCALE NONE / SHEET 2 OF 3 | DIST. | | | |

REWORK INSTRUCTIONS:

ECO 5411846-CX005:

3-1 SEE D-EC-5011845-0-0 FOR EC REWORK INSTRUCTIONS.

COMPONENT DELETES:
3-2 DELETE R1.
COMPONENT ADDS:
3-3 ADD R1 (180 Ω).
WIRE ADDS:
3-4 SIDE 2-ADD WIRE FROM S3 PIN 2 TO R1 ETCH (SOLDER FLAT TO ETCH) (6 PLACES).

ECO 5411846-CX006:

WIRE DELETES:
6-1 SIDE 2-DELETE WIRE FROM S3 PIN 2 TO R1 ETCH. (6 PLACES).
WIRE ADDS:
6-2 SIDE 1-ADD WIRE ON LEFT SIDE OF R1 TO S3 PIN 2.

| REVISION HISTORY | | |
|---|---|---|
| DATE | ECO NUMBER | REV. |

TITLE FRONT PANEL

| DOCUMENT NUMBER | | | |
|---|---|---|---|
| SIZE | CODE | NUMBER | REV. |
| D | UA | 5411846-0-0 | J |
| SCALE NONE | | SHEET 3 OF 3 | |

DRD 137A

AUTOMATED BY PRTLST.3P(44) P A R T S L I S T SHEET A1 OF A1

| LINE | ITEM | DOCUMENT NUMBER | PART NUMBER | DESCRIPTION | QTY PER VARIATION 00 | REFERENCE DESIGNATOR |
|---|---|---|---|---|---|---|
| 1 | 1 | D-MD-5011845-0-0 | 5011845-00 | 54-11846 ETCH CRKT BRD | 1 | |
| 2 | 2 | | 1209941-05 | HEADER.100 10POS RT ANGLE | 1 | J1 |
| 3 | 3 | | 1209941-04 | HEADER RT ANGLE,RIGHT | 1 | |
| 4 | 4 | | 1209941-03 | HEADER RT ANGLE LEFT L | 1 | |
| 5 | 5 | | 1212690-02 | SW,PB 1P RK06 UNIT SELECT | 1 | S3 |
| 6 | 6 | | 1212691-00 | SW,PB CAP "O/READY" FOR 12-1 | 1 | |
| 7 | 7 | | 1212714-05 | SW,PB CAP,YEL/BLK,"LOAD" | 1 | |
| 8 | 8 | | 1212714-01 | SW,PB CAP,YEL/BLK,"WRITE PROT" | 1 | |
| 9 | 9 | | 1212714-02 | SW,PB CAP,RED/BLK,"FAULT" | 1 | |
| 10 | 10 | | 1212715-02 | INDICATOR,DISPLAY PANEL,W/14V LA | 1 | S4 |
| 11 | 11 | | 1212717-05 | SW,PB 1P 3A W/14V LAMP | 2 | S1,S2 |
| 12 | 12 | | 1212716-01 | LAMP,WEDGE,14V | 1 | |
| 13 | 13 | | 1213188-01 | MOUNTING BRACKET,SWITCH | 1 | |
| 14 | 14 | | 1301322-00 | 180.0 .25 W 5.0 % CC | 1 | R1 |
| 15 | 15 | | 9006732-00 | EYELET, ROLLED FLANGE, .121 OD X | 2 | |
| 16 | 16 | | 9107560-01 | WIRE,BUSS,22AWG | 2 | W1,W2 |
| 17 | 17 | | 9006655-00 | WASHER, FLAT, .312 O.D. X .125 I | 2 | |

| REVISION HISTORY | | | BASIC PART NO: 5411846 | | | |
|---|---|---|---|---|---|---|
| ENG | ECO NUMBER | REV | SECTION A OF A | DRN: S. MARLOW | DATE: 7-APR-76 | D I G I T A L |
| MZ | 5411846-CX005 | J | SECTION.VARIATION INDEX [A] 00 | CHK'D: P. BURNELL | DATE: 10-JAN-77 | TITLE PARTS LIST FRONT PANEL |
| | | | [B] | | | |
| | | | [C] | DES.ENG: G. REICHENBERG | DATE: 7-MAR-77 | |
| | | | [D] | | | |
| | | | [E] | | | DOCUMENT NUMBER |
| | | | [F] | RESP.ENG.: G. REICHENBERG | DATE: 7-MAR-77 | |
| | | | [H] | | | SIZE CODE NUMBER REV |
| | | | [J] | | | |
| | | | [K] | MFG.ENG.: L. KIRK | DATE: 9-MAR-77 | K PL 5411846-0-DBP J |
| | | | [L] | | | |
| | | | [M] | ASSEMBLY NUMBER: | TOP DOCUMENT NUMBER: | FILE NAME: EDIT # |
| | | | [N] | D-UA-5411846-0-0 | * B-DD-5411846-0 | Z1580J.PLS 3 |

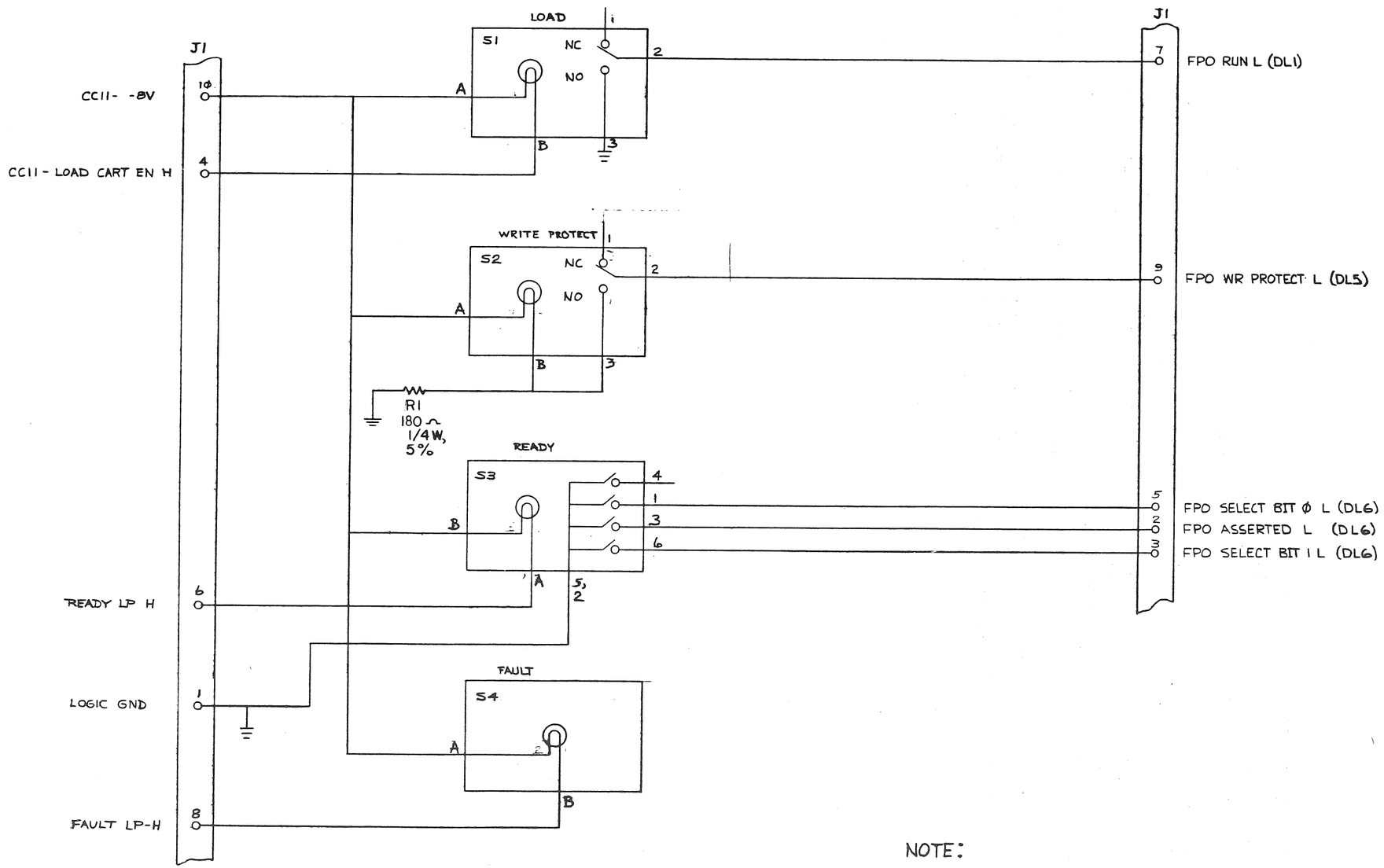


NOTE:

1. ALL LAMPS ARE 6E-73 TYPE

| REVISIONS | | | |
|---|---|---|---|
| CHK | CHANGE NO. | REV. | |
| | 5411846-0701 | E | |
| G. REICHENBERG | | | 7-26-77 |
| | 5411846-CZ002 G. REICHENBERG | F | |
| | 5411846-CZ003 M. ZARICH | H | |
| 633 | 5411846-CX005 D.C. 4 AUG 80 M. ZARICH | J | |
| 635 | 5411846-CX006 D.C. 3 OCT. 80. M. ZARICH | K | |

DEC FORM NO. DED 102-0

| | | |
|---|---|---|
| DRN. | | 27 FEB 76 |
| CHK'D | | 1-11-77 |
| ENG. | | 3-7-77 |
| PROJ. ENG. | | 3-10-77 |
| PROD. | | 3-9-77 |
| NEXT HIGHER ASSY. | | |
| SCALE | | |
| SHEET | OF | |

FIRST USED ON

digital

TITLE

# FRONT PANEL

| SIZE | CODE | NUMBER | REV. |
|---|---|---|---|
| D | CS | 5411846-0-1 | K |

DIST.

SIZE D CODE CS NUMBER 5411846-0-1 REV. K

| SIZE | CODE | NUMBER | REV |
|---|---|---|---|
| D | UA | 5411848-0-0 | F |

COMPONENT SIDE VIEW

| ACTUAL REF DESIGNATORS | SUPERFICIAL REF DESIGNATORS |
|---|---|
| C1,C2,C3,C4,C5,C6,C7 | C101 , C102 , C103 , C104 , C105 , C106 , C107 |
| D1,D2,D3,D4,D5,D6,D7 | D101 , D102 , D103 , D104 , D105 , D106 , D107 |
| D8,D9,D10,D11,D12,D13 | D108 , D109 , D110 , D111 , D112 , D113 |
| E1,E2,E3 | E101 , E102 , E103 |
| K1,K2,K3 | K101 , K102 , K103 |
| J1,J2,J3,J4,J5 | J101 , J102 , J103 , J104 , J105 |
| Q1,Q2,Q3,Q4,Q5,Q6 | Q101 , Q102 , Q103 , Q104 , Q105 , Q106 |
| R1,R2,R3,R4,R5,R6,R7 | R101 , R102 , R103 , R104 , R105 , R106 , R107 |
| R8,R9,R10,R11,R12,R13,R14 | R108 , R109 , R110 , R111 , R112 , R113 , R114 |
| R15,R16,R17,R18,R19,R20,R21,R22 | R115 , R116 , R117 , R118 , R119 , R120 , R121 , R122 |

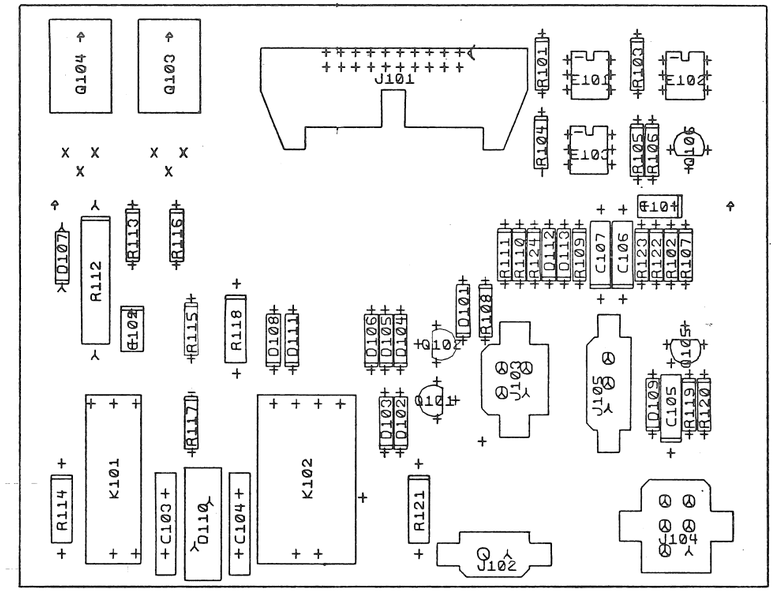


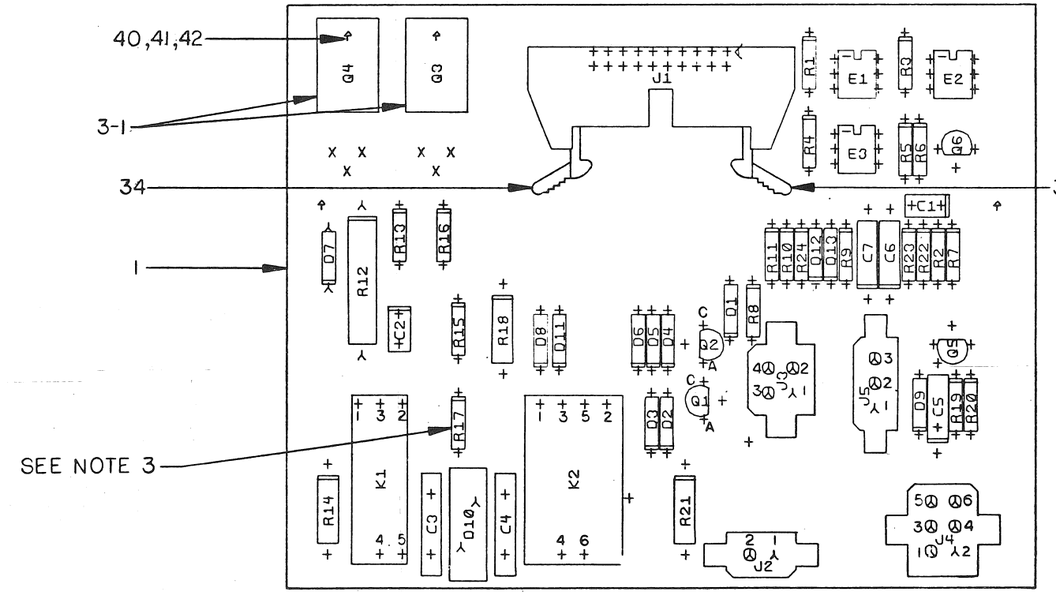


NOTES:

1. 8 HOLES .0465 (+.000-.0045) MAYNARD ONLY
2. U/L APPROVAL REQUIRED
3. REWORK INSTRUCTIONS:
   1. REMOVE R17 (330Ω, 1/4W, 5%)
   2. INSTALL R17 (330Ω, 1/2W, 5%)

| | | |
|---|---|---|
| STEP E | ↑ Y AXIS _____ | STEP ___ TIMES |
| REPEAT | → X AXIS _____ | STEP ___ TIMES |

| CHK | CHANGE NO | REV |
|---|---|---|
| | 5411848-0001 | D |
| | P. BURNELL | |
| TO-HOG 77 | REICHENBERG | |
| W.M. 10 MAR 78 | 5411848-CX002 P. BURNELL | E |
| W.M. 18 MAR 79 | 5411848-CZ003 M ZARICH REDRAWN 5 JUNE 80 | F |

| | |
|---|---|
| ETCH REV. | E-P2 |
| P.C. DESIGN DATA BASE REV. | E-P2 |

| SIGNATURES | DATE |
|---|---|
| DRN. T. SHETRAWSKI | 15-9-77 |
| CHK'D. T. SHETRAWSKI | 15-9-77 |
| MECH.ENG. G. RIECHENBERG | 26-9-77 |
| PROJ.ENG. P. ARNOLD | 26-9-77 |
| PROD. R. STROTT | 26-9-77 |
| SCALE 2/1 | |
| SHT. 1 OF 4 | |

digital

TITLE AC SERVO

| SIZE | CODE | NUMBER | REV |
|---|---|---|---|
| D | UA | 5411848-0-0 | F |

NEXT HIGHER ASSY. B-DD-5411848-0

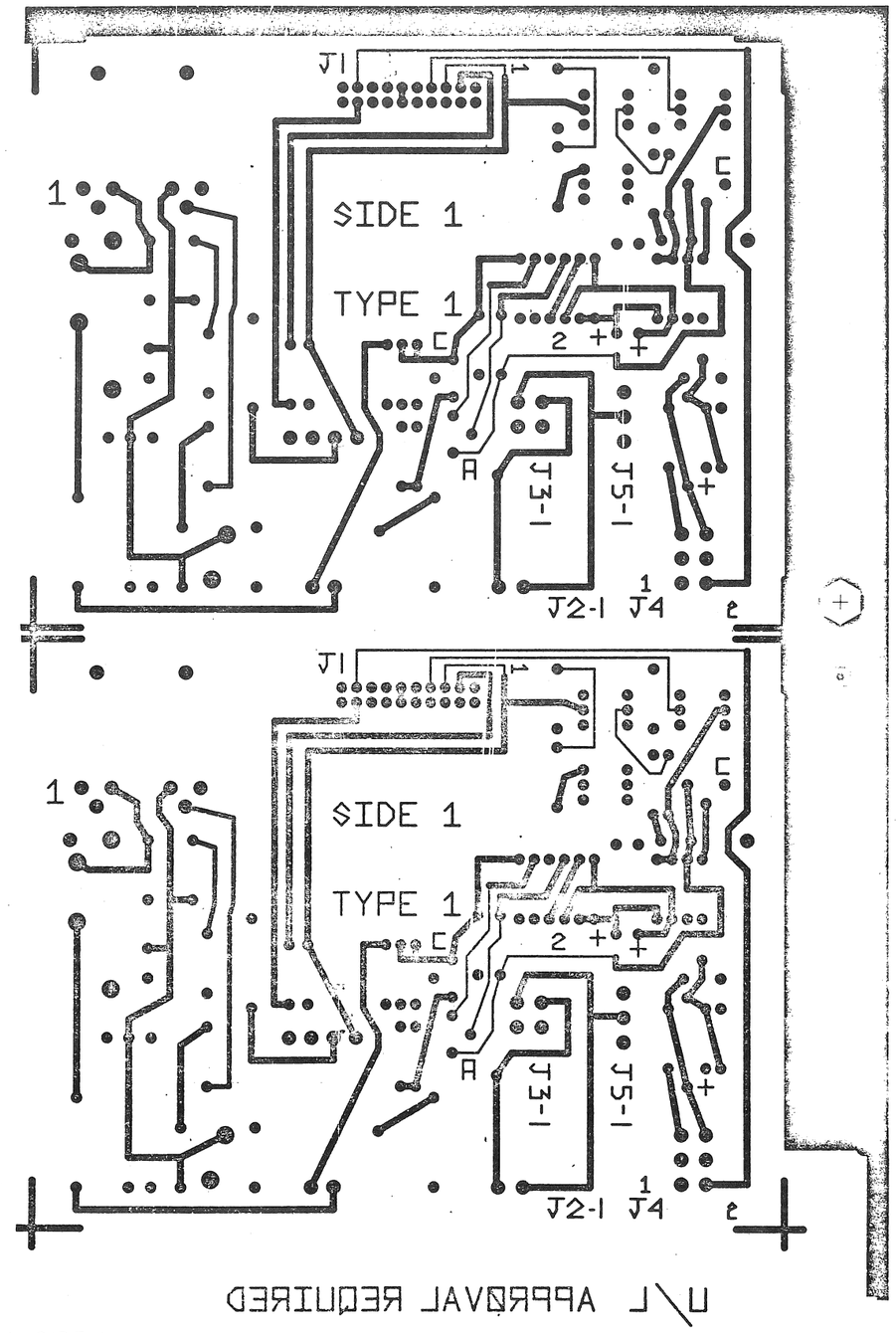


U/L APPROVAL REQUIRED

VIEWED FROM SIDE 1

| REVISIONS | | |
|---|---|---|
| CHK | CHANGE NO | REV |

| TITLE | SIZE | CODE | NUMBER | REV. |
|---|---|---|---|---|
| AC SERVO | D | DA | 5411848 -0-0 | F |
| SCALE 2:1 SHEET OF 4 | | | | |

DEC FORM NO DRD 137

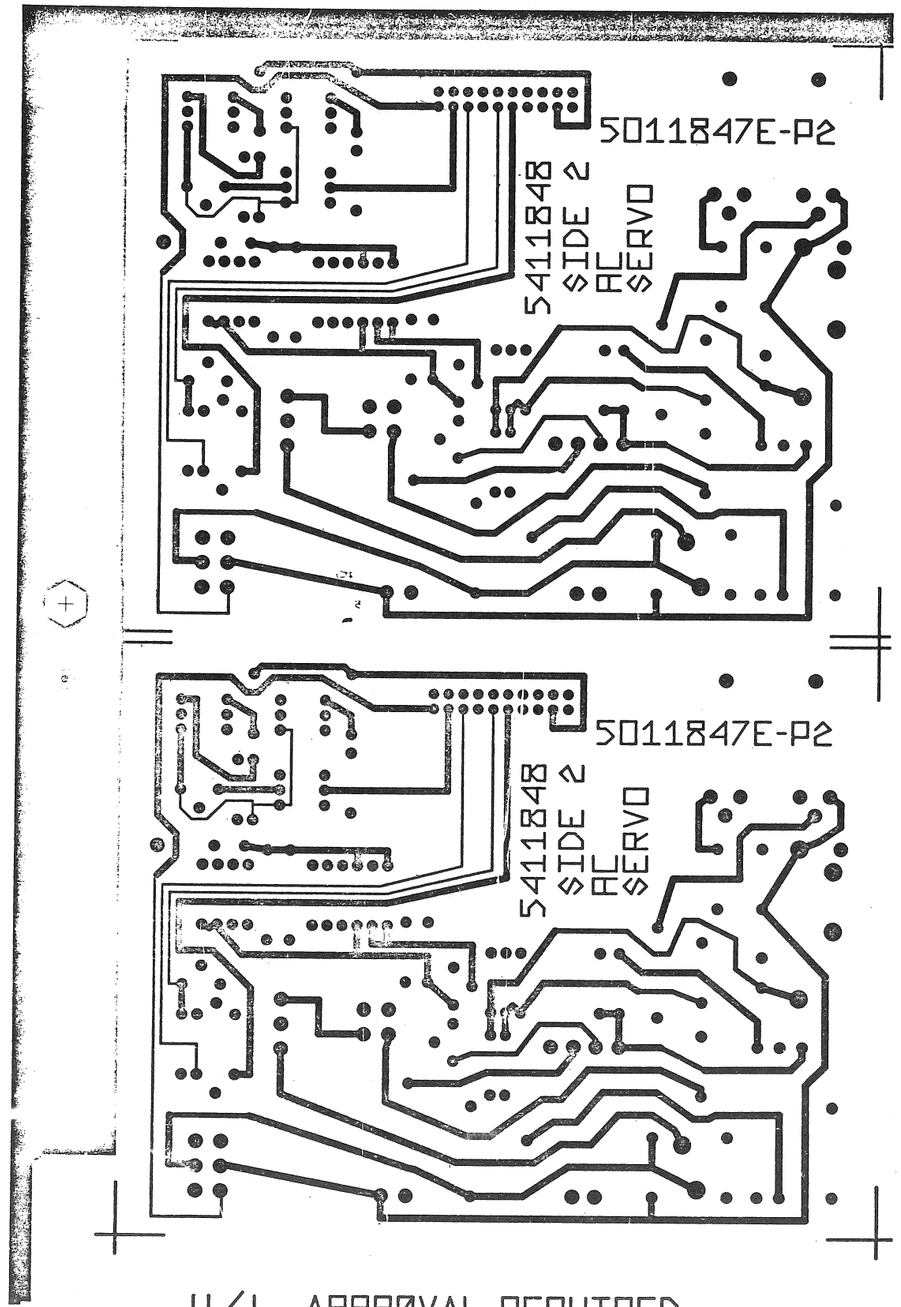


U/L APPRØVAL REQUIRED

VIEWED FROM SIDE 2

| REVISIONS | | |
|---|---|---|
| CHK | CHANGE NO | REV |

| TITLE | SIZE | CODE | NUMBER | REV. |
|---|---|---|---|---|
| AC SERVO | D | UA | 5411848 -0-0 | F |
| SCALE 2:1 SHEET 5 OF 4 | DIST. | | | |

DEC FORM NO DRD 137

## REWORK INSTRUCTIONS

3-1. CHANGE Q3 AND Q4 TO 1510070-00, ITEM 38.

| REVISIONS | | |
|---|---|---|
| CHK | CHANGE NO. | REV. |

| TITLE | SIZE | CODE | NUMBER | REV. |
|---|---|---|---|---|
| AC SERVO | D | UA | 5411848-0-0 | F |
| SCALE — | SHEET 4 OF 4 | | DIST. | |

AUTOMATED BY PRTLST.3K(27) P A R T S L I S T SHEET A1 OF A2

| LINE | ITEM | DOCUMENT NUMBER | PART NUMBER | DESCRIPTION | QTY PER VARIATION 00 | REFERENCE DESIGNATOR |
|---|---|---|---|---|---|---|
| 1 | 1 | D-MD-5011847-0-0 | 5011847-00 | ETCH CRKT BRD | 1 | |
| 2 | 2 | | 1011683-00 | .022 MFD 50V 1%. 67 CER. | 1 | C1 |
| 3 | 3 | | 1012312-01 | .47 MFD 50V X% | 1 | C2 |
| 4 | 4 | | 1013682-00 | .1 MFD 500V +80 -20% CER. | 2 | C3,C4 |
| 5 | 5 | | 1001776-00 | 1 MFD 35V 10% S.TANT | 2 | C5,C7 |
| 6 | 6 | | 1110856-00 | 1N 970B VZ= 24.0 5% .40W Y | 1 | D1 |
| 7 | 7 | | 1111577-00 | 1N 4454 TR= 4NS PIV= 50 S | 10 | D2-D6,D8,D9,D11-D13 |
| 8 | 8 | | 1105796-00 | 1N 4004 PIV=400 I= 1A D041 SP | 1 | D7 |
| 9 | 9 | | 1510727-01 | OPTO COUPLED ISOLATOR | 3 | E1-E3 |
| 10 | 10 | | 1213917-00 | RLY,REED 5V COIL,DPDT | 1 | K2 |
| 11 | 11 | | 1213915-00 | RLY,REED, 5V COIL,SPDT | 1 | K1 |
| 12 | 12 | | 1110997-00 | VP 130A10 VOLT. SUPRESS.130VAC | 1 | D10 |
| 13 | 13 | | 1209941-06 | HEADER.100 20POS RT ANGLE | 1 | J1 |
| 14 | 14 | | 1213922-00 | HEADER 2POS | 1 | J2 |
| 15 | 15 | | 1213922-01 | HEADER 3POS | 1 | J5 |
| 16 | 16 | | 1213922-03 | HEADER 4POS | 1 | J3 |
| 17 | 17 | | 1213922-04 | HEADER 6POS | 1 | J4 |
| 18 | 18 | | 1300315-00 | 470 1/2W 5% CC | 2 | R14,R21 |
| 19 | 19 | | 1300271-00 | 220 1/4W 5% CC | 3 | R1,R3,R4 |
| 20 | 20 | | 1311220-00 | 5.1 1/2W 5% CC | 1 | R18 |
| 21 | 21 | | 1301327-00 | 68 K 1/4W 5% CC | 1 | R6 |
| 22 | 22 | | 1302466-00 | 100 K 1/4W 5% CC | 2 | R5,R8 |
| 23 | 23 | | 1300444-00 | 3.9 K 1/4W 5% CC | 1 | R20 |
| 24 | 24 | | 1314516-00 | 200 K 1/4W 5% CC | 2 | R7,R23 |
| 25 | 25 | | 1300496-00 | 15 K 1/4W 5% CC | 1 | R10 |
| 26 | 26 | | 1300479-00 | 10 K 1/4W 5% CC | 2 | R11,R24 |
| 27 | 27 | | 1300482-00 | 10 K 2W 10% CC | 1 | R12 |
| 28 | 28 | | 1312927-00 | 16 1/4W 5% CC | 2 | R15,R16 |
| 29 | 29 | | 1314649-00 | 430 K 1/4W 5% CC | 1 | R22 |

| REVISION HISTORY | | | | BASIC PART NO: 5411848 | | | | | | | | | | | | |
|---|---|---|---|---|---|---|---|---|---|---|---|---|---|---|---|---|
| ENG | ECO NUMBER | REV | SECTION A OF A | DRN: H. RICHER | DATE: 23 MAR 76 | D | I | G | I | T | A | L | | | | |
| INITIAL | | E | SECTION.VARIATION INDEX | CHK'D: P. BURNELL | DATE: 10 JAN 77 | TITLE PARTS LIST | | | | | | | | | | |
| MZ | 5411848-CZ003 | F | [A] 00 | | | AC SERVO | | | | | | | | | | |
| MZM 18 APR 79 | | | [B] | | | | | | | | | | | | | |
| | | | [C] | DES.ENG: P. BADUM | DATE: 7 JUN 77 | | | | | | | | | | | |
| | | | [D] | | | | | | | | | | | | | |
| | | | [E] | | | DOCUMENT NUMBER | | | | | | | | | | |
| | | | [F] | RESP.ENG.: P. BADUM | DATE: 7 JUN 77 | | | | | | | | | | | |
| | | | [H] | | | SIZE | CODE | NUMBER | REV | | | | | | | |
| | | | [J] | | | | | | | | | | | | | |
| | | | [K] | MFG.ENG.: D. LESAGE | DATE: 7 JUN 77 | K | PL | 5411848-0-DBP | F | | | | | | | |
| | | | [L] | | | | | | | | | | | | | |
| | | | [M] | ASSEMBLY NUMBER: | | FILE NAME: | | | EDIT # | | | | | | | |
| | | | [N] | D-UA-5411848-0-0 | | Z0491.PLS | | | 3 | | | | | | | |



AUTOMATED BY PRTLST.3K(27) P A R T S L I S T SHEET A2 OF A2

| LINE | ITEM | DOCUMENT NUMBER | PART NUMBER | DESCRIPTION | QTY PER VARIATION 00 | REFERENCE DESIGNATOR |
|---|---|---|---|---|---|---|
| 30 | 30 | | 1300296-00 | 330 1/2W 5% CC | 1 | R17 |
| 31 | 31 | | 1302388-00 | 2 K 1/4W 5% CC | 1 | R13 |
| 32 | 32 | | 1309595-00 | 1 M 1/4W 5% CC | 1 | R9 |
| 33 | 33 | | 1303176-00 | 1.6 K 1/4W 5% | 1 | R19 |
| 34 | 34 | | 1209941-03 | HEADER RT ANGLE LEFT L | 1 | J1 |
| 35 | 35 | | 1209941-04 | HEADER RT ANGLE,RIGHT | 1 | J1 |
| 36 | 36 | | 1510877-00 | 2N 6028 UJT 300MW R67B | 2 | Q1,Q6 |
| 37 | 37 | | 1110968-00 | 2N 5062 SCR@100V I=.8A T092 | 1 | Q2 |
| 38 | 38 | | 1510070-00 | TRIAC@400V,I> 8A #RCA40669 M | 2 | Q3,Q4 |
| 39 | 39 | | 1513489-00 | 2N 4401 NPN 350MW SI 40 20 | 1 | Q5 |
| 40 | 40 | | 9006557-00 | NUT,KEP , 4-40X 1/4 AF | 2 | Q3,Q4 |
| 41 | 41 | | 9006010-01 | SCREW,PAN ,PHIL, 4-40X 5/16 | 2 | Q3,Q4 |
| 42 | 42 | | 9006655-00 | WASHER, FLAT, .312 O.D. X .125 I | 2 | Q3,Q4 |
| 43 | 43 | | | *** THIS ITEM IS NOT USED *** | - | |
| 44 | 44 | | 1000002-04 | .33 MFD 35V 10% .150D S.TA | 1 | C6 |
| 45 | 45 | | 1314650-00 | 91 K 1/4W 5% CC | 1 | R2 |

| D | I | G | I | T | A | L | TITLE | SECTION A OF A | SIZE | CODE | DOCUMENT NUMBER | REV |
|---|---|---|---|---|---|---|---|---|---|---|---|---|
| | | | | | | | AC SERVO | | K | PL | 5411848-0-DBP | F |

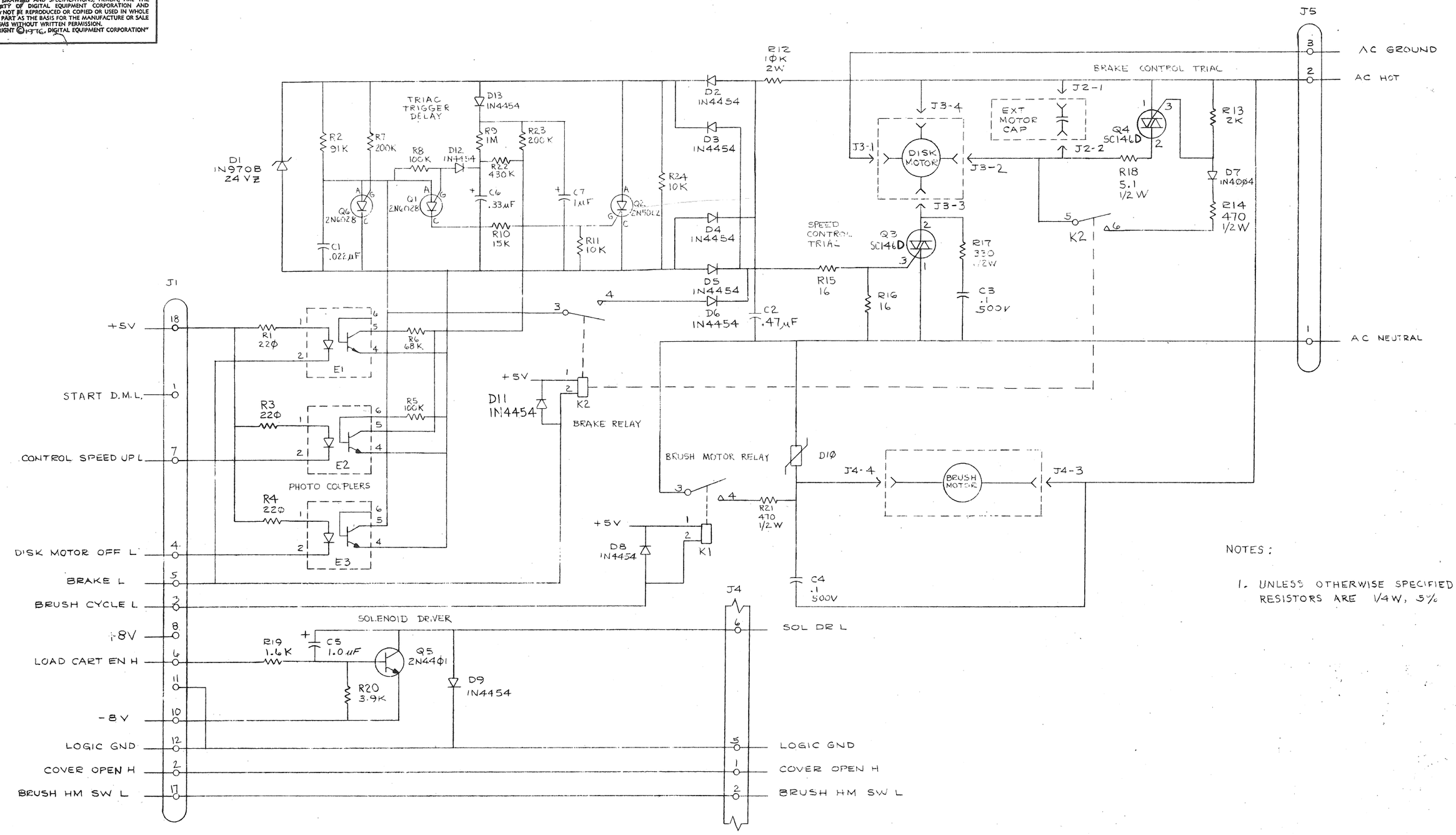


NOTES:

1. UNLESS OTHERWISE SPECIFIED: RESISTORS ARE 1/4W, 5%

| REV. | CHANGE NO. | REVISIONS | CHK |
|---|---|---|---|
| J | | RELEASED AT REV C. EQUAL TO C1 PLUS FIELD SERVICE ANNOTATION | CB |
| D | 5411848-0001 | | CB |
| E1 | 5411848-CX002 | | |
| F | 5411848-CZ003 | | |

PHYLLIS BURNELL
G. REICHENBERG
M. ZARICH

| | | |
|---|---|---|
| DRN. | | 3/16/76 |
| CHK'D | | 1-14-77 |
| ENG. | | 6-8-77 |
| PROJ. ENG. | | 6/7/77 |
| PROD | | 6/7/77 |
| NEXT HIGHER ASSY. | D-UA-5411848-0-0 | |
| SCALE | — | |
| SHEET | 1 OF 1 | |

FIRST USED ON: RL01

TITLE: AC SERVO

digital

| SIZE | CODE | NUMBER | REV. |
|---|---|---|---|
| D | CS | 5411848-0-1 | F |

DIST.

DEC FORM NO. DRD 102-0

COMPONENT SIDE VIEW

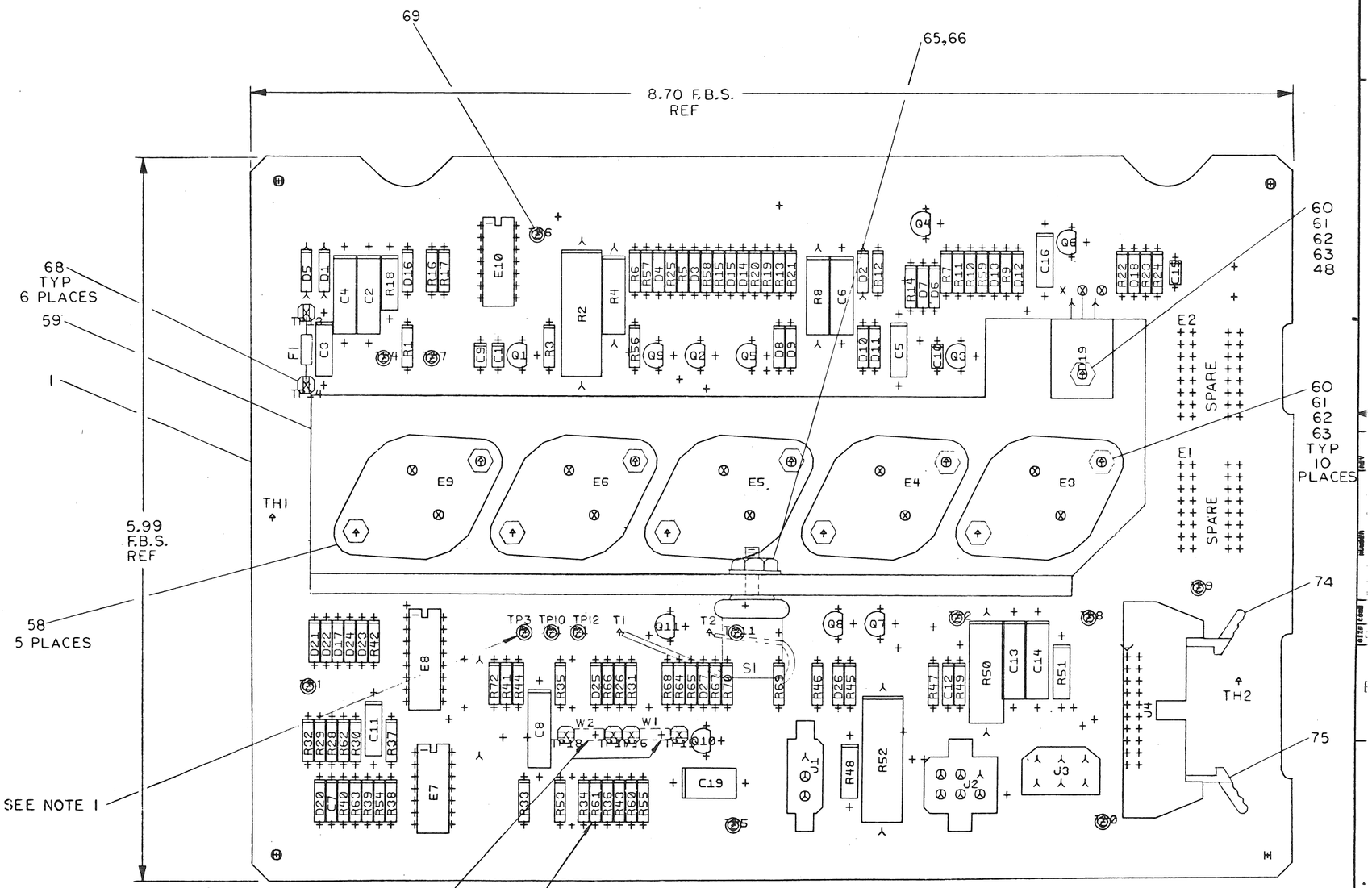


NOTES:

1. TP3, TP11, TP12 & TP15 THRU TP18 TO BE MOUNTED ON SIDE 2.
2. R60 AND R61 ARE TO BE INSTALLED AFTER FINAL TEST.
3. INSTALL W1 AND W2 FOR RL01. INSTALL W2 ONLY FOR RL02. W1 & W2 ARE LOCATED ON SIDE 2.

| REV | CHANGE NO | CHK |
|---|---|---|
| B | 5413534-C2001 BOB NOGUCHI | |
| C | 5413534-CX02A M. ZARICH | |

ETCH REV. B
P.C. DESIGN DATA BASE REV. BL

| SIGNATURES | DATE |
|---|---|
| DRN. | |
| CHK'D. | |
| ENG. | |
| PROJ.ENG. | |
| PROD | |
| SCALE 2/1 | |
| SHT. 1 OF 1 | |
| NEXT HIGHER ASSY. B-CD-5413534-0 | |

digital

TITLE DC SERVO & POWER SUPPLY

| SIZE | CODE | NUMBER | REV |
|---|---|---|---|
| D | UA | 5413534-0-0 | C |

1 MS#291-021

| LINE | ITEM | DOCUMENT NUMBER | PART NUMBER | DESCRIPTION | QTY PER VARIATION 00 | REFERENCE DESIGNATOR |
|---|---|---|---|---|---|---|
| 1 | 1 | D-MD-5013533-0-0 | 5013533-00 | ETCHED CIRCUIT BOARD | 1 | |
| 2 | 2 | | 1013466-08 | 680.0 MMF 50V 10% X7R CER | 1 | C12 |
| 3 | 3 | | 1016009-00 | 2200.0 MMF 50V 5% CER | 1 | C7 |
| 4 | 4 | | 1001610-00 | .01 MFD 50V +80-20% Z5U CER | 4 | C1,C9,C10,C15 |
| 5 | 5 | | 1002630-00 | .015 MFD 100V 10% MYLR | 1 | C8 |
| 6 | 6 | | 1013466-11 | .22 MFD 50V +80-20% Z5U CER | 4 | C3,C5,C11,C16 |
| 7 | 7 | | 1005306-00 | 6.8MFD 35V 10% S.TANT | 4 | C4,C6,C13,C14 |
| 8 | 8 | | 1000076-00 | 39 MFD 10V 10% S.TANT | 1 | C2 |
| 9 | 9 | | 1309422-00 | 5.10 .25 W 5.0 % CC | 1 | R58 |
| 10 | 10 | | 1312929-00 | 62.0 .25 W 5.0 % CC | 2 | R3,R23 |
| 11 | 11 | | 1311523-00 | 110.0 .25 W 5.0 % CC | 1 | R22 |
| 12 | 12 | | 1300247-00 | 120.0 .25 W 5.0 % CC | 1 | R13 |
| 13 | 13 | | 1300271-00 | 220.0 .25 W 5.0 % CC | 1 | R59 |
| 14 | 14 | | 1301425-00 | 300.0 .25 W 5.0 % CC | 1 | R55 |
| 15 | 15 | | 1303178-00 | 620.0 .25 W 5.0 % CC | 1 | R6 |
| 16 | 16 | | 1300365-00 | 1.0 K .25 W 5.0 % CC | 5 | R1,R7,R39,R44,R57 |
| 17 | 17 | | 1300391-00 | 1.50 K .25 W 5.0 % CC | 1 | R5 |
| 18 | 18 | | 1302388-00 | 2.0 K .25 W 5.0 % CC | 2 | R31,R43 |
| 19 | 19 | | 1300426-00 | 2.70 K .25 W 5.0 % CC | 2 | R46,R47 |
| 20 | 20 | | 1302389-00 | 4.30 K .25 W 5.0 % CC | 1 | R53 |
| 21 | 21 | | 1300447-00 | 4.70 K .25 W 5.0 % CC | 10 | R10-R12,R14,R15,R19,R20,R24,R49, |
| | | | | | CONT | R68 |
| 22 | 22 | | 1303179-00 | 8.20 K .25 W 5.0 % CC | 3 | R9,R16,R17 |
| 23 | 23 | | 1300488-00 | 12.0 K .25 W 5.0 % CC | 4 | R25,R26,R45,R56 |
| 24 | 24 | | 1305346-00 | 27.0 K .25 W 5.0 % CC | 1 | R21 |
| 25 | 25 | | 1305131-00 | *** THIS ITEM IS NOT USED *** | - | |
| 26 | 26 | | 1312923-00 | 2.10 K .25 W 1.0 % RN55D-F10 | 1 | R41 |
| 27 | 27 | | 1305114-00 | 3.48 K .25 W 1.0 % RN55D-F10 | 1 | R34 |
| 28 | 28 | | 1314763-00 | 4.12 K .25 W 1.0 % RN55D-F10 | 1 | R36 |
| 29 | 29 | | 1303312-00 | 10.0 K .25 W 1.0 % RN55D-F10 | 3 | R28,R29,R62 |

| REVISION HISTORY | | | BASIC PART NO: 5413534 | DRN: JERRY BEST | DATE: 26-JUL-78 | D I G I T A L |
|---|---|---|---|---|---|---|
| ENG | ECO NUMBER | REV | SECTION A OF A | | | TITLE PARTS LIST |
| INIT | | A | SECTION.VARIATION INDEX | CHK'D: JERRY BEST | DATE: 26-JUL-78 | D.C. SERVO AND POWER SUPPLY |
| BN | 5413534-CZ001 | B | [A] 00 | | | |
| MZ | 5413534-CX003 | C | [B] | | | |
| | | | [C] | DES.ENG: R. NOGUCHI | DATE | |
| | | | [D] | | | DOCUMENT NUMBER |
| | | | [E] | | | |
| | | | [F] | RESP.ENG.: R. NOGUCHI | DATE: 26-JUL-78 | |
| | | | [H] | | | SIZE CODE NUMBER REV |
| | | | [J] | | | |
| | | | [K] | MFG.ENG.: P. CHURCH | DATE: | K PL 5413534-0-DBP C |
| | | | [L] | | | |
| | | | [M] | ASSEMBLY NUMBER: | TOP DOCUMENT NUMBER: | FILE NAME: EDIT # |
| | | | [N] | D-UA-5413534-0-0 | RL02 | Z0494C.PLS 18 |

RPM 10 Nov 80 MZ





| LINE | ITEM | DOCUMENT NUMBER | PART NUMBER | DESCRIPTION | QTY PER VARIATION 00 | REFERENCE DESIGNATOR |
|---|---|---|---|---|---|---|
| 30 | 30 | | 1312924-00 | 10.70 K .25 W 1.0 % RN55D-F10 | 1 | R32 |
| 31 | 31 | | 1309412-00 | 18.20 K .25 W 1.0 % RN55D-F10 | 1 | R33 |
| 32 | 32 | | 1315436-00 | 52.30 K .25 W 1.0 % RN55D-F10 | 1 | R54 |
| 33 | 33 | | 1304843-00 | 243.0 K .25 W 1.0 % RN55D-F10 | 1 | R72 |
| 34 | 34 | | 1315437-00 | 237.0 K .25 W .10% RN55D-F10 | 1 | R38 |
| 35 | 35 | | 1302378-00 | 51.0 .50 W 5.0 % CC | 1 | R51 |
| 36 | 36 | | 1300364-00 | 1.0 K .50 W 5.0 % CC | 2 | R18,R48 |
| 37 | 37 | | 1314068-00 | 360.0 1.0 W 5.0 % CC | 1 | R4 |
| 38 | 38 | | 1300368-00 | 1.0 K 1.0 W 5.0 % CC | 1 | R8 |
| 39 | 39 | | 1301494-00 | 200.0 2.0 W 5.0 % CC | 1 | R50 |
| 40 | 40 | | 1313358-00 | .20 5.0 W 3.0 % WW | 2 | R2,R52 |
| 41 | 41 | | 1105796-00 | 1N 4004 PIV=400 I= 1A D041 SP | 3 | D1,D2,D5 |
| 42 | 42 | | 1113953-00 | 1N 5523D VZ= 5.1 1% | 8 | D4,D6,D8,D9,D16,D18,D21,D22 |
| 43 | 43 | | 1109990-00 | 1N 757A VZ= 9.1 5% .40W P | 2 | D23,D24 |
| 44 | 44 | | 1110994-00 | 1N 751A VZ= 5.1 5% .40W | 1 | D14 |
| 45 | 45 | | 1114117-00 | 1N 4152 PIV=450 I=75M | 6 | D3,D7,D10,D11,D12,D13 |
| 46 | 46 | | 1111577-00 | 1N 4454 TR= 4NS PIV= 50 S | 6 | D15,D17,D20,D25-D27 |
| 47 | 47 | | 1513698-00 | TRIAC@200V,I>14A | 1 | D19 |
| 48 | 48 | | 9009597-00 | INSULATOR, THERMA-FILM | 1 | |
| 49 | 49 | | 1513489-00 | 2N 4401 NPN 350MW SI 40 20 | 4 | Q2,Q4,Q8,Q9 |
| 50 | 50 | | 1513490-00 | 2N 4403 PNP 350MW SI-40 30 | 6 | Q1,Q3,Q5-Q7,Q11 |
| 51 | 51 | | 1511282-00 | MJ2500 PNP 150WC SI 60 5 1K 5A | 2 | E4,E6 |
| 52 | 52 | | 1511349-00 | TIP 640 (OR MJ3000) NPN DARLINGT | 1 | E3 |
| 53 | 53 | | 1911706-00 | 5012 ANALOG SWITCH,4CHNL | 1 | E8 |
| 54 | 54 | | 1912818-00 | LS38 NAND BUFFER-QUAD 2IN | 1 | E10 |
| 55 | 55 | | 1912107-01 | 324ANOP AMP,QUAD | 1 | E7 |
| 56 | 56 | | 1913695-00 | 7808 VOLT REG,FIX +8V | 1 | E9 |
| 57 | 57 | | 1913694-00 | 7908 VOLT REG,FIX -8V | 1 | E5 |
| 58 | 58 | | 9008419-00 | WASHER, FLAT, THERMAFILM .002THK | 5 | |
| 59 | 59 | | 7418595-00 | HEATSINK ASSEMBLY | 1 | |
| 60 | 60 | | 9008033-01 | SCREW,PAN,PHIL 4-40X 9/16 SS | 11 | |
| 61 | 61 | | 9006557-00 | NUT,KEP , 4-40X 1/4 AF | 11 | |
| 62 | 62 | | 9006655-00 | WASHER, FLAT, .312 O.D. X .125 I | 11 | |
| 63 | 63 | | 9008268-00 | COMPOUND, THERMAL JOINT | A/R | |
| 64 | 64 | | 1210824-00 | THERMOSTAT,O@215,C@156,SPST,NORM | 1 | S1 |
| 65 | 65 | | 9008185-00 | NUT,KEP , 6-32X1/4 AF | 1 | |
| 66 | 66 | | 9006653-00 | WASHER, FLAT, .375 O.D. X .156 I | 1 | |
| 67 | 67 | | 1205747-00 | FUSE, SUB-MINI, 5.000A, 125V, A | 1 | F1 |
| 68 | 68 | | 9006735-00 | EYELET, FUNNEL FLANGE, .059 OD X | 6 | TP13-TP18 |
| 69 | 69 | | 9007791-00 | TERM PCB 2POS SOLDER,TURRET | 13 | TP0-TP12 |
| 70 | 70 | | 1213922-01 | HEADER 3POS | 1 | J1 |
| 71 | 71 | | 1213922-04 | HEADER 6POS | 1 | J2 |
| 72 | 72 | | 1213900-00 | CONN,RCPT 6POS | 1 | J3 |
| 73 | 73 | | 1209941-06 | HEADER,100 20POS RT ANGLE | 1 | J4 |
| 74 | 74 | | 1209941-04 | HEADER RT ANGLE,RIGHT | 1 | |
| 75 | 75 | | 1209941-03 | HEADER RT ANGLE LEFT L | 1 | |
| 76 | 76 | | 1305324-00 | 4.99 K .25 W 1.0 % RN55D-F10 | 2 | R37,R30 |
| 77 | 77 | | 1300250-00 | 150.0 .25 W 5.0 % CC | 1 | R42 |

| D I G I T A L | TITLE | SECTION A OF A | SIZE CODE DOCUMENT NUMBER REV |
|---|---|---|---|
| | D.C. SERVO AND POWER SUPPLY | | K PL 5413534-0-DBP C |

| LINE | ITEM | DOCUMENT NUMBER | PART NUMBER | DESCRIPTION | QTY PER VARIATION 00 | REFERENCE DESIGNATOR |
|---|---|---|---|---|---|---|
| 78 | 78 | | 1312618-00 | 16.90 K .25 W 1.0 % RN55D-F10 | 1 | R40 |
| 79 | 79 | | 1300229-00 | 100.0 .25 W 5.0 % CC | 1 | R63 |
| 80 | 80 | | 1305336-00 | *** THIS ITEM IS NOT USED *** | - | |
| 81 | 81 | | 1309416-00 | 31.60 K .25 W 1.0 % RN55D-F10 | 1 | R65 |
| 82 | 82 | | 1002781-00 | 100 MFD 25V +75-10% AL EL | 1 | C20 |
| 83 | 83 | | 9009185-00 | JUMPER, WIRE, INSULATED, BLACK B | 2 | W1,W2 |
| 84 | 84 | | 1303044-00 | 100.0 K .25 W 1.0 % RN55D-F10 | 1 | R64 |
| 85 | 85 | | 1015574-00 | *** THIS ITEM IS NOT USED *** | - | |
| 86 | 86 | | 1315435-00 | 25.50 K .25 W 1.0 % RN55D-F10 | 1 | R66 |
| 87 | 87 | | 1312930-00 | 5.10 K .25 W 5.0 % CC | 1 | R67 |
| 88 | 88 | | 1015520-00 | 1 MFD 100V 5% MET. MYLR | 1 | C19 |
| 89 | 89 | | 1513697-00 | 2N 5640 FET N CHNNL | 1 | Q10 |
| 90 | 90 | | 1300479-00 | 10.0 K .25 W 5.0 % CC | 1 | R69 |
| 91 | 91 | | 1302466-00 | 100.0 K .25 W 5.0 % CC | 1 | R70 |
| 92 | 92 | | 9105740-55 | WIRE(WRAP)30AWG UL1423 | A/R | |

| D | I | G | I | T | A | L | TITLE D.C. SERVO AND POWER SUPPLY | SECTION A OF A |
|---|---|---|---|---|---|---|---|---|

| SIZE | CODE | DOCUMENT NUMBER | REV |
|---|---|---|---|
| K | PL | 5413534-0-DBP | C |

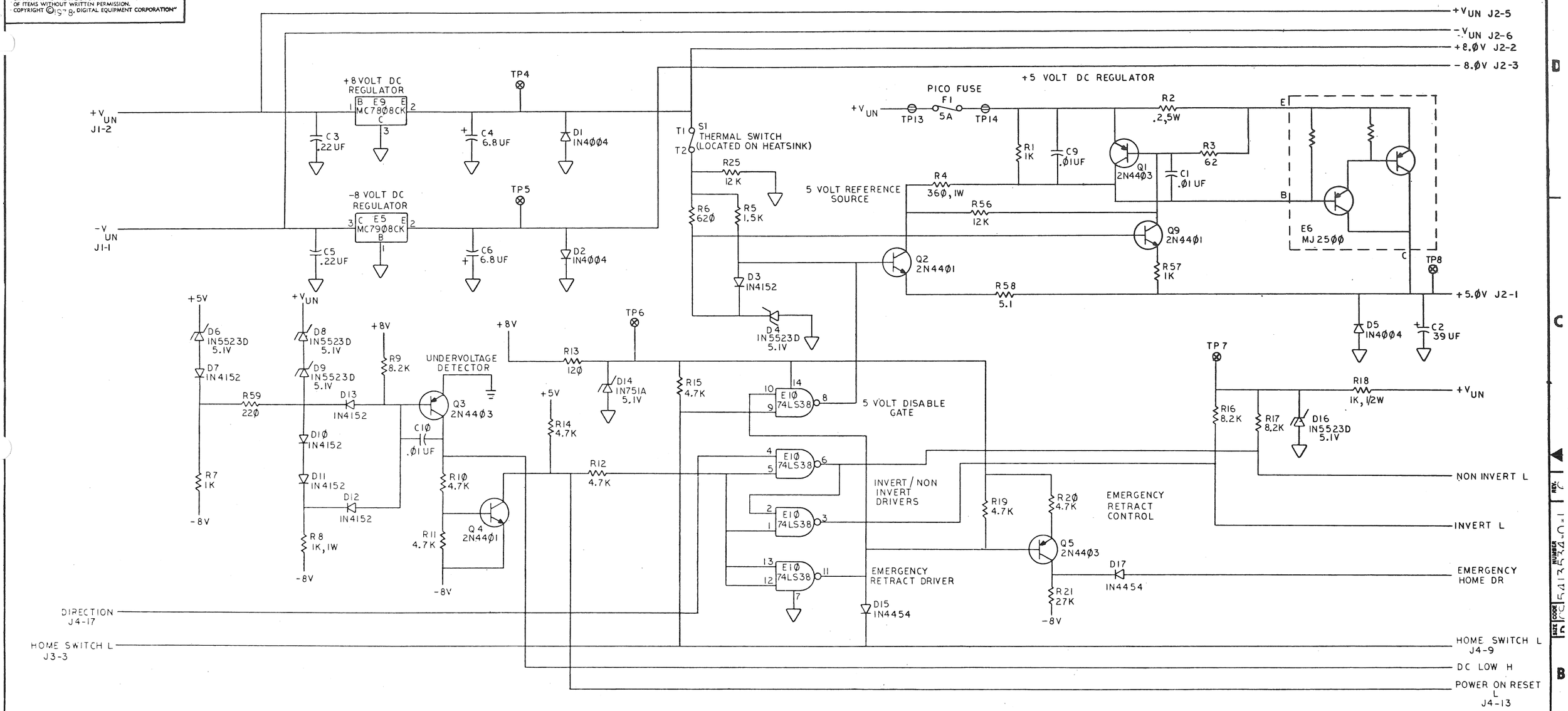


NOTES:

1. ALL RESISTORS TO BE 1/4W, 5%; UNLESS OTHERWISE SPECIFIED.
2. E1 AND E2 ARE SPARES.
3. VALUE OF R6Ø OR R61 WILL BE DETERMINED IN TESTING.
4. INSTALL W1 AND W2 FOR RLØ1 ON SIDE 2. INSTALL W2 ONLY FOR RLØ2 ON SIDE 2.

| REVISIONS | | | |
|---|---|---|---|
| CHK | CHANGE NO. | | REV. |
| | 5413534-0-1 POR NOGUCHI | | B |
| | 5413534-0X02A M. ZARICH | | C |

| | DESCRIPTION | DWG./PART NO. | ITEM NO. |
|---|---|---|---|
| QUANTITY & VARIATION | UNLESS OTHERWISE SPECIFIED DIMENSIONS ARE IN INCHES | | |

| ANGLES ±0° 30' | CLASS OF ACCURACY (CHECK ONE) | NOMINAL DIMENSION RANGE INCHES | | | | | |
|---|---|---|---|---|---|---|---|
| SURFACE QUALITY IN MICROINCHES | | OVER 0 TO 0.2 | OVER 0.2 TO 1.2 | OVER 1.2 TO 4.0 | OVER 4.0 TO 12.0 | OVER 12.0 TO 40.0 | OVER 40.0 TO 80.0 |
| | MEDIUM ☐ | ±.004 | ±.008 | ±.012 | ±.016 | ±.024 | ±.04 |
| | PREFERRED ☐ | ±.012 | ±.016 | ±.025 | ±.04 | ±.063 | ±0.1 |

THIRD ANGLE PROJECTION

REMOVE BURRS AND BREAK SHARP CORNERS

DO NOT SCALE DWG

MATERIAL

FINISH

DRN. | CHK'D | ENG. | PROJ. ENG. | PROD.

NEXT HIGHER ASSY.

D-UA-5413534-0-0

SCALE

SHEET 1 OF 2

FIRST USED ON digital

TITLE
DC SERVO AND POWER SUPPLY

| SIZE | CODE | NUMBER | REV. |
|---|---|---|---|
| D | CS | 5413534-0-1 | C |

DIST.

DEC FORM NO. DRD 100-C

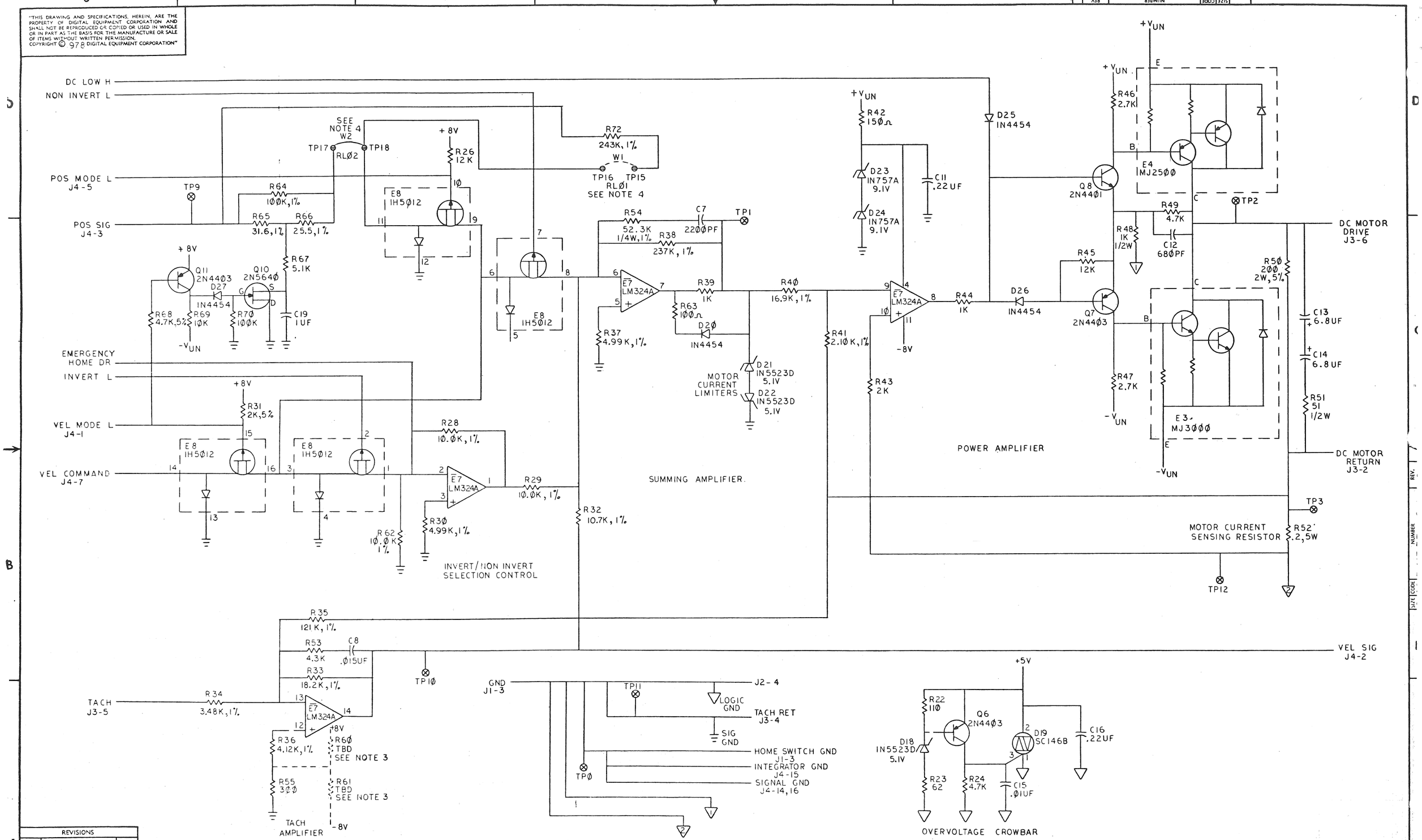


| REVISIONS | | |
|---|---|---|
| CHK | CHANGE NO | REV. |

| TITLE | SIZE | CODE | NUMBER | REV. |
|---|---|---|---|---|
| DC SERVO AND POWER SUPPLY | D | CS | 5413534-0-1 | C |
| SCALE | SHEET 2 OF 2 | DIST. | | |

| SIZE | CODE | NUMBER | REV. |
|---|---|---|---|
| B | DD | 5413534-0 | D |

| DRAWING NO. | NO. OF SHTS. | PART NO. | DESCRIPTION | A | B | C (RPM 23 MAY 80) | D (RPM 6 NOV 80) | E (REV 17 JUN 81) |
|---|---|---|---|---|---|---|---|---|
| D-UA-5413534-0-0 | 2 | | D.C. SERVO AND POWER SUPPLY | A | B | C | D | E |
| D-CS-5413534-0-1 | 2 | | D.C. SERVO AND POWER SUPPLY | A | B | C | D | E |
| D-MD-5013533-0-0 | 4 | | DRILL & ETCH DRAWING | A | A | A | A | A |
| | | 5013533 | ETCHED BOARD | B | B | B | B | A |
| K-PC-5413534-0-DBC | - | | P.C. DESIGN DATA BASE | A | A | A | A | A |
| K-PL-5413534-0-DBP | - | | INSERTION PARTS LIST DATA BASE | A | B | B | C | D |
| D-EC-5013533-0-0 | 2 | | ETCH CUT DRAWING | — | — | A | A | A |

REVISIONS

| REV. | CHG NO. | DATE |
|---|---|---|
| * | | 7/20/78 |
| A | 5413534-2 ZØØ1 | 12 APR 79 |
| B | 5413534-CXØ2A | 23 MAY 80 |
| C | 5413534-CXØØ3 | 6 NOV 80 |
| D | 5413534-CXØØ4 | 17 JUNE 81 |

NOTES:



digital

| USED ON OPTION/MODEL | |
|---|---|
| RLØ2 | |

| | | |
|---|---|---|
| DRN. | N. Keith | 4/18/78 |
| CHK'D | H.K. | 4/18/78 |
| ENG. | Robert G. Noguch | 8/11/78 |
| PROD. | P. CHURCH Pearson | 9/27/78 |

TITLE: D.C. SERVO AND POWER SUPPLY

| SIZE | CODE | NUMBER | REV. |
|---|---|---|---|
| B | DD | 5413534-0 | D |

SHEET 1 OF 1

DRB 126

COMPONENT SIDE VIEW

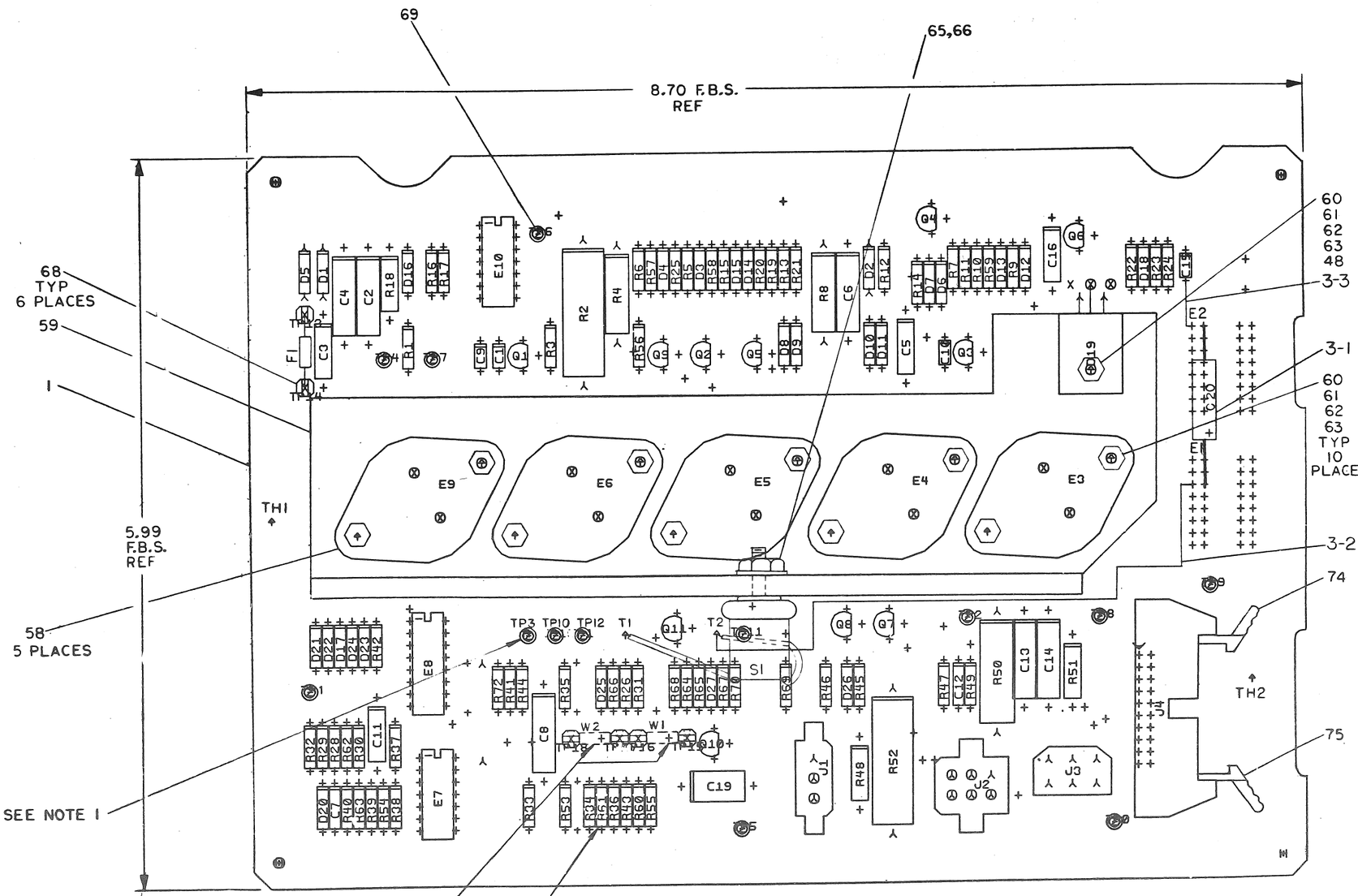


NOTES:

1. TP3, TP11, TP12 & TP15 THRU TP19 TO BE MOUNTED ON SIDE 2.
2. R60 AND R61 ARE TO BE INSTALLED AFTER FINAL TEST.
3. INSTALL W1 AND W2 FOR RLØ1. INSTALL W2 ONLY FOR RLØ2. W1 & W2 ARE LOCATED ON SIDE 2.

| CHK | CHANGE NO | REV |
|---|---|---|
| | | B |
| BOB NOGUCHI | 5413534-CX001 | C |
| M. ZARICH | 5413534-CX002A | C |
| M. ZARICH | 5413534-CX003 | D |

ETCH REV. B
P.C. DESIGN DATA BASE REV. BL

| SIGNATURES | DATE |
|---|---|
| DRN. | 6/15/78 |
| CHK'D. | |
| ENG. | |
| PROJ. ENG. | |
| PROD. | 6/27/78 |

digital

TITLE DC SERVO & POWER SUPPLY

SCALE 2/1
SHT. 1 OF 2
NEXT HIGHER ASSY. B-DD-5413534-0

| SIZE | CODE | NUMBER | REV |
|---|---|---|---|
| D | UA | 5413534-0-0 | D |

MS#291-021

## REWORK INSTRUCTIONS:

ECO 5413534-CX003

COMPONENT ADDS SIDE 1:

3-1 ADD POLARIZED SIDE OF C20 (1002781-00) AT E1-3 AND THE GND SIDE AT E2-1.

WIRE ADDS SIDE 1:

3-2 ADD WIRE FROM THE PTH NEXT TO E1-3 TO T2.

3-3 ADD WIRE FROM THE PTH NEXT TO E2-1 TO C15 GND (BOTTOM).

| REVISION HISTORY | | |
|---|---|---|
| DATE | ECO NUMBER | REV. |
| | | |

TITLE DC SERVO AND POWER SUPPLY

| DOCUMENT NUMBER | | | |
|---|---|---|---|
| SIZE | CODE | NUMBER | REV. |
| D | UA | 5413534-0-0 | D |

SCALE —//— SHEET 2 OF 2

DRD 137A

| LINE | ITEM | DOCUMENT NUMBER | PART NUMBER | DESCRIPTION | QTY PER VARIATION 00 | REFERENCE DESIGNATOR |
|---|---|---|---|---|---|---|
| 1 | 1 | D-MD-5013533-0-0 | 5013533-00 | ETCHED CIRCUIT BOARD | 1 | |
| 2 | 2 | | 1013466-08 | 680.0 MMF 50V 10% X7R CER | 1 | C12 |
| 3 | 3 | | 1016009-00 | 2200.0 MMF 50V 5% CER | 1 | C7 |
| 4 | 4 | | 1001610-00 | .01 MFD 50V +80-20% Z5U CER | 4 | C1,C9,C10,C15 |
| 5 | 5 | | 1002630-00 | .015 MFD 100V 10% MYLR | 1 | C8 |
| 6 | 6 | | 1013466-11 | .22 MFD 50V +80-20% Z5U CER | 4 | C3,C5,C11,C16 |
| 7 | 7 | | 1005306-00 | *** THIS ITEM IS NOT USED *** | - | |
| 8 | 8 | | 1000076-00 | *** THIS ITEM IS NOT USED *** | - | |
| 9 | 9 | | 1309422-00 | 5.10 .25 W 5.0 % CC | 1 | R58 |
| 10 | 10 | | 1312929-00 | 62.0 .25 W 5.0 % CC | 2 | R3,R23 |
| 11 | 11 | | 1311523-00 | 110.0 .25 W 5.0 % CC | 1 | R22 |
| 12 | 12 | | 1300247-00 | 120.0 .25 W 5.0 % CC | 1 | R13 |
| 13 | 13 | | 1300271-00 | 220.0 .25 W 5.0 % CC | 1 | R59 |
| 14 | 14 | | 1301425-00 | 300.0 .25 W 5.0 % CC | 1 | R55 |
| 15 | 15 | | 1303178-00 | 620.0 .25 W 5.0 % CC | 1 | R6 |
| 16 | 16 | | 1300365-00 | 1.0 K .25 W 5.0 % CC | 5 | R1,R7,R39,R44,R57 |
| 17 | 17 | | 1300391-00 | 1.50 K .25 W 5.0 % CC | 1 | R5 |
| 18 | 18 | | 1302388-00 | 2.0 K .25 W 5.0 % CC | 2 | R31,R43 |
| 19 | 19 | | 1300426-00 | 2.70 K .25 W 5.0 % CC | 2 | R46,R47 |
| 20 | 20 | | 1302389-00 | 4.30 K .25 W 5.0 % CC | 1 | R53 |
| 21 | 21 | | 1300447-00 | 4.70 K .25 W 5.0 % CC | 10 | R10-R12,R14,R15,R19,R20,R24,R49, |
| | | | | | CONT | R68 |
| 22 | 22 | | 1303179-00 | 8.20 K .25 W 5.0 % CC | 3 | R9,R16,R17 |
| 23 | 23 | | 1300488-00 | 12.0 K .25 W 5.0 % CC | 4 | R25,R26,R45,R56 |
| 24 | 24 | | 1305346-00 | 27.0 K .25 W 5.0 % CC | 1 | R21 |
| 25 | 25 | | 1305131-00 | *** THIS ITEM IS NOT USED *** | - | |
| 26 | 26 | | 1312923-00 | 2.10 K .25 W 1.0 % RN55D-F10 | 1 | R41 |
| 27 | 27 | | 1305114-00 | 3.48 K .25 W 1.0 % RN55D-F10 | 1 | R34 |
| 28 | 28 | | 1314763-00 | 4.12 K .25 W 1.0 % RN55D-F10 | 1 | R36 |
| 29 | 29 | | 1303312-00 | 10.0 K .25 W 1.0 % RN55D-F10 | 3 | R28,R29,R62 |

| REVISION HISTORY | | | BASIC PART NO: 5413534 | | | |
|---|---|---|---|---|---|---|
| ENG | ECO NUMBER | REV | SECTION A OF A | DRN: JERRY BEST | DATE: 26-JUL-78 | TITLE PARTS LIST |
| | INIT | A | SECTION.VARIATION INDEX | CHK'D: JERRY BEST | DATE: 26-JUL-78 | D.C. SERVO AND POWER SUPPLY |
| BN | 5413534-CZ001 | B | [A] 00 | | | |
| MZ | 5413534-CX003 | C | [B] | DES.ENG: R. NOGUCHI | DATE: | |
| MZ | 5413534-CX004 | D | [C] | | | |
| | | | [D] | | | |
| | | | [E] | RESP.ENG.: R. NOGUCHI | DATE: 26-JUL-78 | DOCUMENT NUMBER |
| | | | [F] | | | |
| | | | [H] | | | |
| | | | [J] | | | |
| | | | [K] | MFG.ENG.: P. CHURCH | DATE: | SIZE K, CODE PL, NUMBER 5413534-0-DBP, REV D |
| | | | [L] | | | |
| | | | [M] | ASSEMBLY NUMBER: D-UA-5413534-0-0 | TOP DOCUMENT NUMBER: RL02 | FILE NAME: Z0494D.PLS, EDIT # 20 |
| | | | [N] | | | |





| LINE | ITEM | DOCUMENT NUMBER | PART NUMBER | DESCRIPTION | QTY PER VARIATION 00 | REFERENCE DESIGNATOR |
|---|---|---|---|---|---|---|
| 30 | 30 | | 1312924-00 | 10.70 K .25 W 1.0 % RN55D-F10 | 1 | R32 |
| 31 | 31 | | 1309412-00 | 18.20 K .25 W 1.0 % RN55D-F10 | 1 | R33 |
| 32 | 32 | | 1315436-00 | 52.30 K .25 W 1.0 % RN55D-F10 | 1 | R54 |
| 33 | 33 | | 1304843-00 | 243.0 K .25 W 1.0 % RN55D-F10 | 1 | R72 |
| 34 | 34 | | 1315437-00 | 237.0 K .25 W .10% RN55D-F10 | 1 | R38 |
| 35 | 35 | | 1302378-00 | 51.0 .50 W 5.0 % CC | 1 | R51 |
| 36 | 36 | | 1300364-00 | 1.0 K .50 W 5.0 % CC | 2 | R18,R48 |
| 37 | 37 | | 1314068-00 | 360.0 1.0 W 5.0 % CC | 1 | R4 |
| 38 | 38 | | 1300368-00 | 1.0 K 1.0 W 5.0 % CC | 1 | R8 |
| 39 | 39 | | 1301494-00 | 200.0 2.0 W 5.0 % CC | 1 | R50 |
| 40 | 40 | | 1313358-00 | .20 5.0 W 3.0 % WW | 2 | R2,R52 |
| 41 | 41 | | 1105796-00 | 1N 4004 PIV=400 I= 1A D041 SP | 3 | D1,D2,D5 |
| 42 | 42 | | 1113953-00 | 1N 5523D VZ= 5.1 1% | 8 | D4,D6,D8,D9,D16,D18,D21,D22 |
| 43 | 43 | | 1109990-00 | 1N 757A VZ= 9.1 5% .40W P | 2 | D23,D24 |
| 44 | 44 | | 1110994-00 | 1N 751A VZ= 5.1 5% .40W | 1 | D14 |
| 45 | 45 | | 1114117-00 | 1N 4152 PIV=40 I=75 | 6 | D3,D7,D10,D11,D12,D13 |
| 46 | 46 | | 1111577-00 | 1N 4454 TR= 4NS PIV= 50 S | 6 | D15,D17,D20,D25-D27 |
| 47 | 47 | | 1513698-00 | TRIAC@200V,I>14A | 1 | D19 |
| 48 | 48 | | 9009597-00 | INSULATOR, THERMA-FILM | 1 | |
| 49 | 49 | | 1513489-00 | 2N 4401 NPN 350MW SI 40 20 | 4 | Q2,Q4,Q8,Q9 |
| 50 | 50 | | 1513490-00 | 2N 4403 PNP 350MW SI-40 30 | 6 | Q1,Q3,Q5-Q7,Q11 |
| 51 | 51 | | 1511282-00 | MJ2500 PNP 150WC SI 60 5 1K 5A | 2 | E4,E6 |
| 52 | 52 | | 1511349-00 | TIP 640 (OR MJ3000) NPN DARLINGT | 1 | E3 |
| 53 | 53 | | 1911706-00 | 5012 ANALOG SWITCH,4CHNL | 1 | E8 |
| 54 | 54 | | 1912818-00 | LS38 NAND BUFFER-QUAD 2IN | 1 | E10 |
| 55 | 55 | | 1912107-01 | 324ANOP AMP,QUAD | 1 | E7 |
| 56 | 56 | | 1913695-00 | 7808 VOLT REG,FIX +8V | 1 | E9 |
| 57 | 57 | | 1913694-00 | 7908 VOLT REG,FIX -8V | 1 | E5 |
| 58 | 58 | | 9008419-00 | WASHER, FLAT, THERMAFILM .002THK | 5 | |
| 59 | 59 | | 7418595-00 | HEATSINK ASSEMBLY | 1 | |
| 60 | 60 | | 9008033-01 | SCREW,PAN,PHIL 4-40X 9/16 SS | 11 | |
| 61 | 61 | | 9006557-00 | NUT,KEP , 4-40X 1/4 AF | 11 | |
| 62 | 62 | | 9006655-00 | WASHER, FLAT, .312 O.D. X .125 I | 11 | |
| 63 | 63 | | 9008268-00 | COMPOUND, THERMAL JOINT | A/R | |
| 64 | 64 | | 1210824-00 | THERMOSTAT,O@215,C@156,SPST,NORM | 1 | S1 |
| 65 | 65 | | 9008185-00 | NUT,KEP , 6-32X1/4 AF | 1 | |
| 66 | 66 | | 9006653-00 | WASHER, FLAT, .375 O.D. X .156 I | 1 | |
| 67 | 67 | | 1205747-00 | FUSE, SUB-MINI, 5.000A, 125V, A | 1 | F1 |
| 68 | 68 | | 9006735-00 | EYELET, FUNNEL FLANGE, .059 OD X | 6 | TP13-TP18 |
| 69 | 69 | | 9007791-00 | TERM PCB 2POS SOLDER,TURRET | 13 | TP0-TP12 |
| 70 | 70 | | 1213922-01 | HEADER 3POS | 1 | J1 |
| 71 | 71 | | 1213922-04 | HEADER 6POS | 1 | J2 |
| 72 | 72 | | 1213900-00 | CONN,RCPT 6POS | 1 | J3 |
| 73 | 73 | | 1209941-06 | HEADER.100 20POS RT ANGLE | 1 | J4 |
| 74 | 74 | | 1209941-04 | HEADER RT ANGLE,RIGHT | 1 | |
| 75 | 75 | | 1209941-03 | HEADER RT ANGLE LEFT L | 1 | |
| 76 | 76 | | 1305324-00 | 4.99 K .25 W 1.0 % RN55D-F10 | 2 | R37,R30 |
| 77 | 77 | | 1300250-00 | 150.0 .25 W 5.0 % CC | 1 | R42 |

| D | I | G | I | T | A | L | TITLE | SECTION A OF A | SIZE | CODE | DOCUMENT NUMBER | REV |
|---|---|---|---|---|---|---|---|---|---|---|---|---|
| | | | | | | | D.C. SERVO AND POWER SUPPLY | | K | PL | 5413534-0-DBP | D |

| LINE | ITEM | DOCUMENT NUMBER | PART NUMBER | DESCRIPTION | QTY PER VARIATION 00 | REFERENCE DESIGNATOR |
|---|---|---|---|---|---|---|
| 78 | 78 | | 1312618-00 | 16.90 K .25 W 1.0 % RN55D-F10 | 1 | R40 |
| 79 | 79 | | 1300229-00 | 100.0 .25 W 5.0 % CC | 1 | R63 |
| 80 | 80 | | 1305336-00 | *** THIS ITEM IS NOT USED *** | - | |
| 81 | 81 | | 1309416-00 | 31.60 K .25 W 1.0 % RN55D-F10 | 1 | R65 |
| 82 | 82 | | 1002781-00 | 100 MFD 25V +75-10% AL EL | 1 | C20 |
| 83 | 83 | | 9009185-00 | JUMPER, WIRE, INSULATED, BLACK B | 2 | W1,W2 |
| 84 | 84 | | 1303044-00 | 100.0 K .25 W 1.0 % RN55D-F10 | 1 | R64 |
| 85 | 85 | | 1015574-00 | *** THIS ITEM IS NOT USED *** | - | |
| 86 | 86 | | 1315435-00 | 25.50 K .25 W 1.0 % RN55D-F10 | 1 | R66 |
| 87 | 87 | | 1312930-00 | 5.10 K .25 W 5.0 % CC | 1 | R67 |
| 88 | 88 | | 1015520-00 | 1 MFD 100V 5% MET. MYLR | 1 | C19 |
| 89 | 89 | | 1513697-00 | 2N 5640 FET N CHNNL | 1 | Q10 |
| 90 | 90 | | 1300479-00 | 10.0 K .25 W 5.0 % CC | 1 | R69 |
| 91 | 91 | | 1302466-00 | 100.0 K .25 W 5.0 % CC | 1 | R70 |
| 92 | 92 | | 9105740-55 | WIRE(WRAP)30AWG UL1423 | A/R | |
| 93 | 93 | | 1017472-00 | 10 MFD 35V +50-10% AL EL | 4 | C4,C6,C13,C14 |
| 94 | 94 | | 1016549-00 | 47 MFD 10V +50-10% AL EL | 1 | C2 |

| D | I | G | I | T | A | L | TITLE | SECTION A OF A |
|---|---|---|---|---|---|---|---|---|
| | | | | | | | D.C. SERVO AND POWER SUPPLY | |

| SIZE | CODE | DOCUMENT NUMBER | REV |
|---|---|---|---|
| K | PL | 5413534-0-DBP | D |

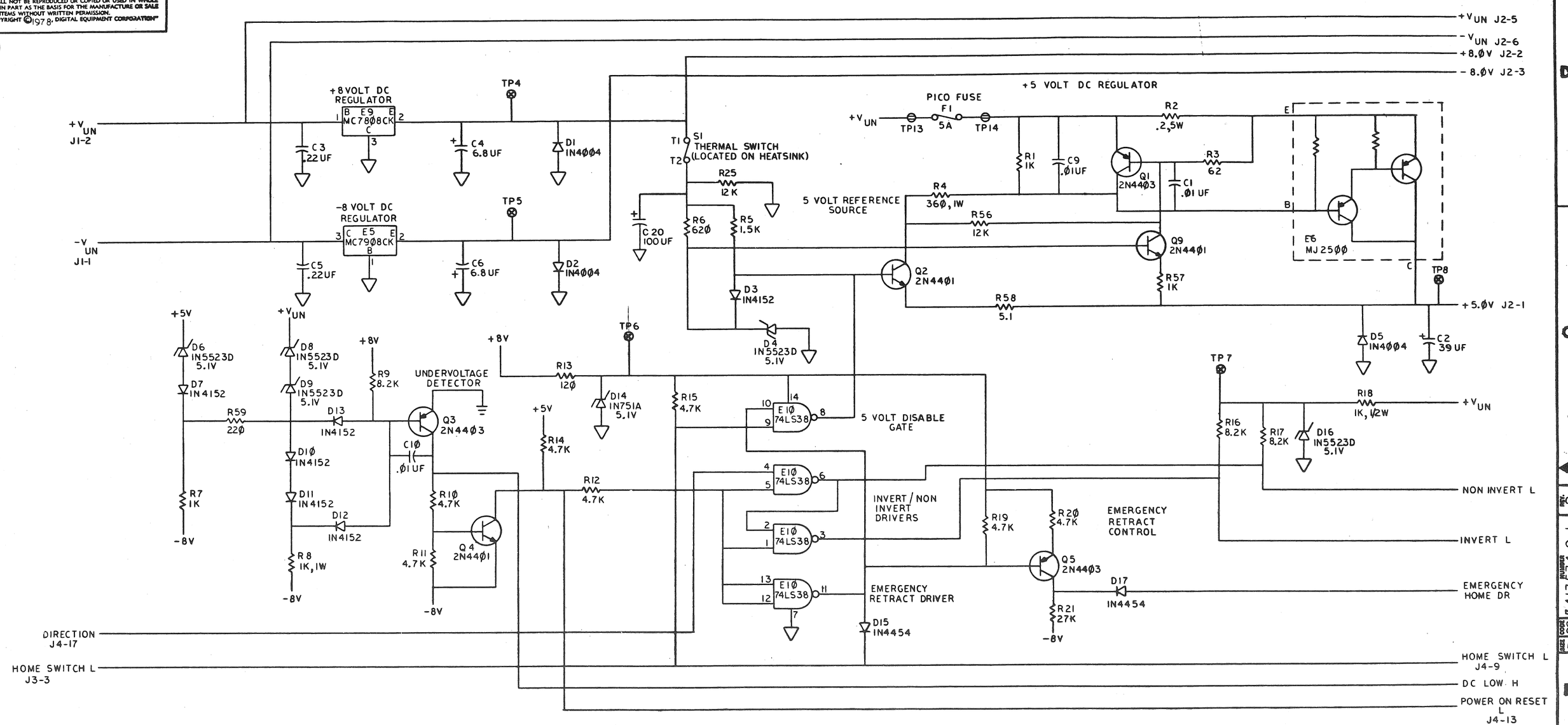


NOTES:

1. ALL RESISTORS TO BE 1/4W, 5%; UNLESS OTHERWISE SPECIFIED.
2. ~~E1 AND E2 ARE SPARES.~~
3. VALUE OF R60 OR R61 WILL BE DETERMINED IN TESTING.
4. INSTALL W1 AND W2 FOR RL01 ON SIDE 2. INSTALL W2 ONLY FOR RL02 ON SIDE 2.

| REVISIONS | | | |
|---|---|---|---|
| CHK | CHANGE NO. | | REV. |
| | 5413534-CZ001 BOB NOGUCHI | | B |
| | 5413534-CX002A M. ZARICH | | C |
| | 5413534-CX003 M. ZARICH | | D |

| | DESCRIPTION | DWG./PART NO. | ITEM NO. |
|---|---|---|---|
| QUANTITY & VARIATION | UNLESS OTHERWISE SPECIFIED DIMENSIONS ARE IN INCHES | | |

| ANGLES ±0° 30' | CLASS OF ACCURACY (CHECK ONE) | NOMINAL DIMENSION RANGE INCHES: OVER 0 TO 0.2 | OVER 0.2 TO 1.2 | OVER 1.2 TO 4.0 | OVER 4.0 TO 12.0 | OVER 12.0 TO 40.0 | OVER 40.0 TO 80.0 |
|---|---|---|---|---|---|---|---|
| SURFACE QUALITY IN MICROINCHES | MEDIUM | ±.004 | ±.008 | ±.012 | ±.016 | ±.024 | ±.04 |
| | PREFERRED | ±.012 | ±.016 | ±.025 | ±.04 | ±.063 | ±0.1 |

THIRD ANGLE PROJECTION

REMOVE BURRS AND BREAK SHARP CORNERS

DO NOT SCALE DWG

MATERIAL

FINISH

| | | |
|---|---|---|
| DRN. R. Richard | 8/15/78 | |
| CHK'D | | |
| ENG. | | |
| PROJ. ENG. | 5/27/78 | |
| PROD. | 5/27/78 | |

NEXT HIGHER ASSY.: D-UA-5413534-0-0

SCALE —

SHEET 1 OF 2

FIRST USED ON

digital

TITLE: DC SERVO AND POWER SUPPLY

| SIZE | CODE | NUMBER | REV. |
|---|---|---|---|
| D | CS | 5413534-0-1 | D |

DIST.

DEC FORM NO. ORD 100-C

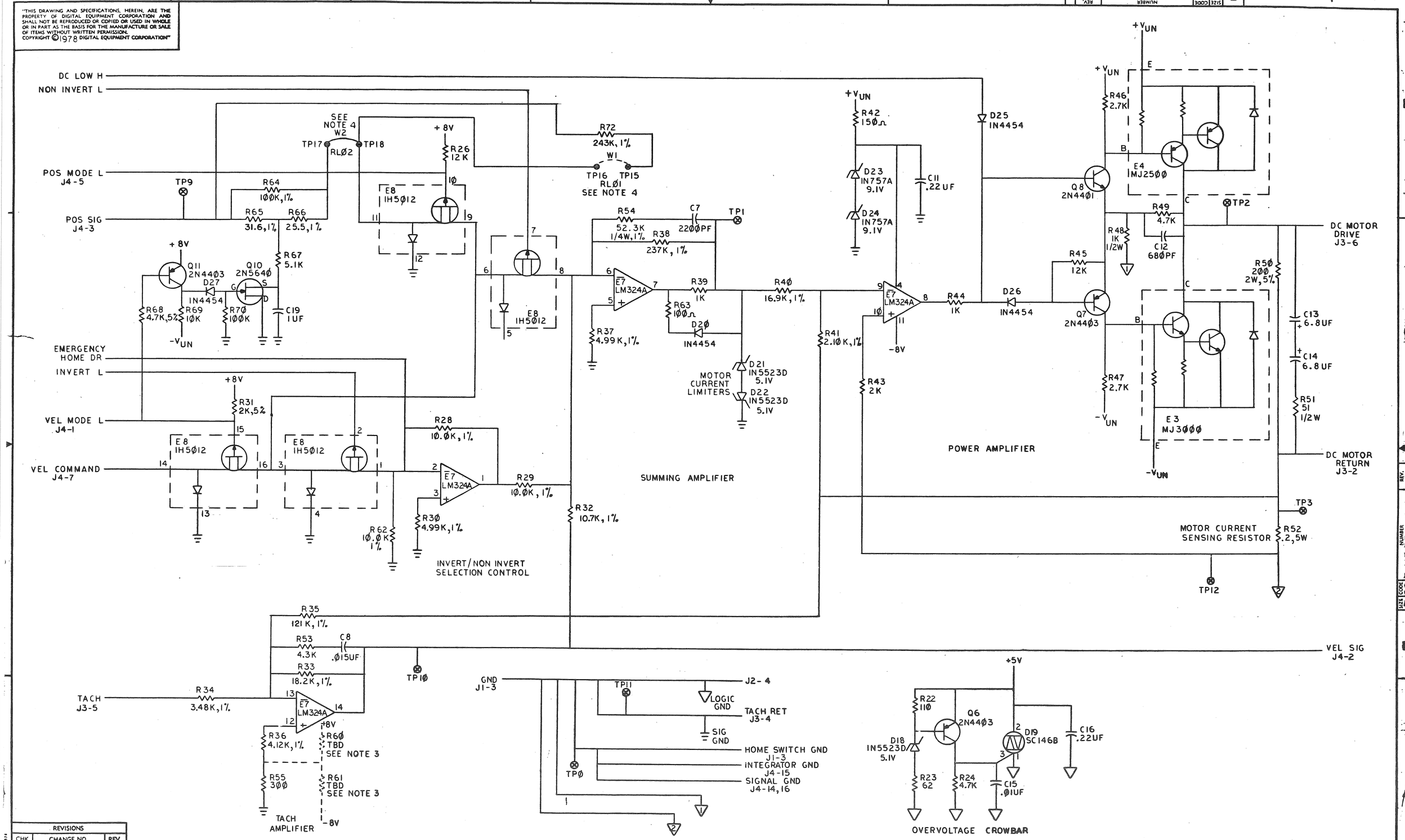


| REVISIONS | | |
|---|---|---|
| CHK | CHANGE NO. | REV. |

| TITLE | SIZE | CODE | NUMBER | REV. |
|---|---|---|---|---|
| DC SERVO AND POWER SUPPLY | D | CS | 5413534-0-1 | D |
| SCALE | SHEET 2 OF 2 | DIST. | | |

DEC FORM NO. DRD 137

COMPONENT SIDE VIEW

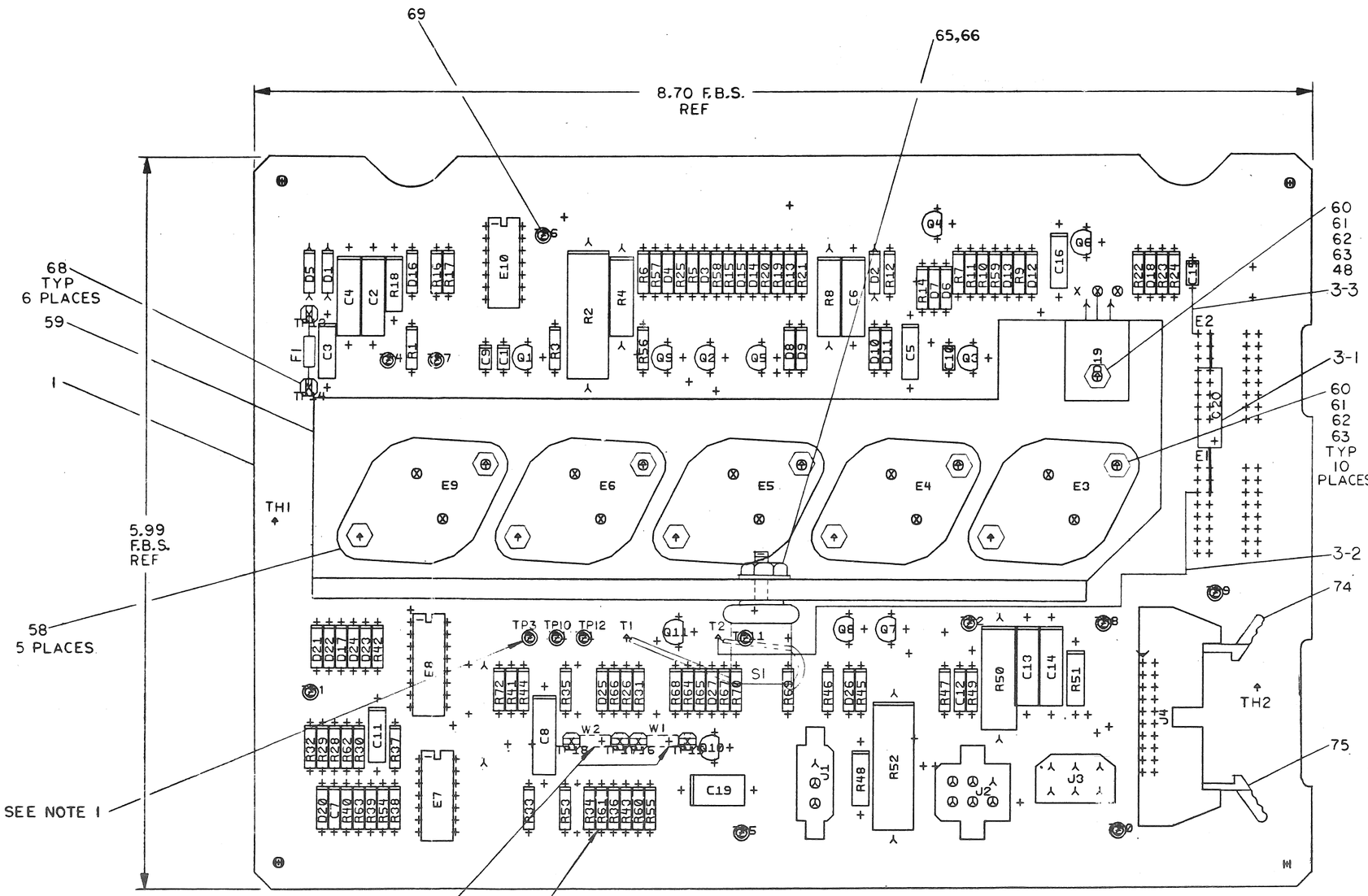


NOTES:
1. TP3, TP11, TP12 & TP15 THRU TP18 TO BE MOUNTED ON SIDE 2.
2. R60 AND R61 ARE TO BE INSTALLED AFTER FINAL TEST.
3. INSTALL W1 AND W2 FOR RL01. INSTALL W2 ONLY FOR RL22. W1 & W2 ARE LOCATED ON SIDE 2.
4. CS REV TO BE MARKED ON SIDE TWO (2).

| CHK | CHANGE NO | REV |
|---|---|---|
| | 5413534-0001 ROB NOGUCHI | B |
| | 5413531-CX012A M. ZARICH | C |
| | 5413534-CX0003 M. ZARICH | D |
| 801 | 5413534-CX0004 DB JUN 81 M. ZARICH | E |

ETCH REV. B
P.C. DESIGN DATA BASE REV. BL

| SIGNATURES | DATE |
|---|---|
| DRN. Paul R. Kendrick | 6/5/78 |
| CHK'D. [illegible] | 6/5/78 |
| ENG. [illegible] | [illegible] |
| PROJ. ENG. [illegible] | [illegible] |
| PROD. [illegible] | 9/27/78 |

digital

TITLE DC SERVO & POWER SUPPLY

SCALE 2/1
SHT. 1 OF 2

| SIZE | CODE | NUMBER | REV |
|---|---|---|---|
| D | UA | 5413534-0-0 | E |

NEXT HIGHER ASSY. B-DD-5413534-0

MS# 291-02

SIZE D CODE UA NUMBER 5413534-0-0 REV E

## REWORK INSTRUCTIONS:

ECO 5413534-CX003

COMPONENT ADDS SIDE 1:

3-1 ADD POLARIZED SIDE OF C20 (1002781-00) AT E1-3 AND THE GND SIDE AT E2-1.

WIRE ADDS SIDE 1:

3-2 ADD WIRE FROM THE PTH NEXT TO E1-3 TO T2.

3-3 ADD WIRE FROM THE PTH NEXT TO E2-1 TO C15 GND (BOTTOM).

| REVISION HISTORY | | |
|---|---|---|
| DATE | ECO NUMBER | REV. |
| | | |

TITLE DC SERVO AND POWER SUPPLY

| DOCUMENT NUMBER | | | |
|---|---|---|---|
| SIZE | CODE | NUMBER | REV. |
| D | UA | 5413534-0-0 | E |
| SCALE —//— | | SHEET 2 OF 2 | |

DRD 137A

| LINE | ITEM | DOCUMENT NUMBER | PART NUMBER | DESCRIPTION | QTY PER VARIATION 00 | REFERENCE DESIGNATOR |
|---|---|---|---|---|---|---|
| 1 | 1 | D-MD-5013533-0-0 | 5013533-00 | ETCHED CIRCUIT BOARD | 1 | |
| 2 | 2 | | 1013466-08 | 680.0 MMF 50V 10% X7R CER | 1 | C12 |
| 3 | 3 | | 1016009-00 | 2200.0 MMF 50V 5% CER | 1 | C7 |
| 4 | 4 | | 1001610-00 | .01 MFD 50V +80-20% Z5U CER | 4 | C1,C9,C10,C15 |
| 5 | 5 | | 1002630-00 | .015 MFD 100V 10% MYLR | 1 | C8 |
| 6 | 6 | | 1013466-11 | .22 MFD 50V +80-20% Z5U CER | 4 | C3,C5,C11,C16 |
| 7 | 7 | | 1005306-00 | *** THIS ITEM IS NOT USED *** | - | |
| 8 | 8 | | 1000076-00 | *** THIS ITEM IS NOT USED *** | - | |
| 9 | 9 | | 1309422-00 | 5.10 .25 W 5.0 % CC | 1 | R58 |
| 10 | 10 | | 1312929-00 | 62.0 .25 W 5.0 % CC | 2 | R3,R23 |
| 11 | 11 | | 1311523-00 | 110.0 .25 W 5.0 % CC | 1 | R22 |
| 12 | 12 | | 1300247-00 | 120.0 .25 W 5.0 % CC | 1 | R13 |
| 13 | 13 | | 1300271-00 | 220.0 .25 W 5.0 % CC | 1 | R59 |
| 14 | 14 | | 1301425-00 | 300.0 .25 W 5.0 % CC | 1 | R55 |
| 15 | 15 | | 1303178-00 | 620.0 .25 W 5.0 % CC | 1 | R6 |
| 16 | 16 | | 1300365-00 | 1.0 K .25 W 5.0 % CC | 5 | R1,R7,R39,R44,R57 |
| 17 | 17 | | 1300391-00 | 1.50 K .25 W 5.0 % CC | 1 | R5 |
| 18 | 18 | | 1302388-00 | 2.0 K .25 W 5.0 % CC | 2 | R31,R43 |
| 19 | 19 | | 1300426-00 | 2.70 K .25 W 5.0 % CC | 2 | R46,R47 |
| 20 | 20 | | 1302389-00 | 4.30 K .25 W 5.0 % CC | 1 | R53 |
| 21 | 21 | | 1300447-00 | 4.70 K .25 W 5.0 % CC | 10 | R10-R12,R14,R15,R19,R20,R24,R49, |
| | | | | | CONT | R68 |
| 22 | 22 | | 1303179-00 | 8.20 K .25 W 5.0 % CC | 3 | R9,R16,R17 |
| 23 | 23 | | 1300488-00 | 12.0 K .25 W 5.0 % CC | 4 | R25,R26,R45,R56 |
| 24 | 24 | | 1305346-00 | 27.0 K .25 W 5.0 % CC | 1 | R21 |
| 25 | 25 | | 1305131-00 | *** THIS ITEM IS NOT USED *** | - | |
| 26 | 26 | | 1312923-00 | 2.10 K .25 W 1.0 % RN55D-F10 | 1 | R41 |
| 27 | 27 | | 1305114-00 | 3.48 K .25 W 1.0 % RN55D-F10 | 1 | R34 |
| 28 | 28 | | 1314763-00 | 4.12 K .25 W 1.0 % RN55D-F10 | 1 | R36 |
| 29 | 29 | | 1303312-00 | 10.0 K .25 W 5.0 % RN55D-F10 | 3 | R28,R29,R62 |

| REVISION HISTORY | | | |
|---|---|---|---|
| ENG | ECO NUMBER | REV | SECTION.VARIATION INDEX |
| | INIT | A | [A] 00 |
| BN | 5413534-CZ001 | B | [B] |
| MZ | 5413534-CX003 | C | [C] |
| MZ | 5413534-CX004 | D | [D] |
| SM | 5413534-CX05A | E | [E] |
| KSM | 2/1/82 | | [F] |
| | | | [H] |
| | | | [J] |
| | | | [K] |
| | | | [L] |
| | | | [M] |
| | | | [N] |

BASIC PART NO: 5413534 SECTION A OF A

DRN: JERRY BEST DATE: 26-JUL-78
CHK'D: JERRY BEST DATE: 26-JUL-78
DES.ENG: R. NOGUCHI DATE:
RESP.ENG.: R. NOGUCHI DATE: 26-JUL-78
MFG.ENG.: P. CHURCH DATE:
ASSEMBLY NUMBER: D-UA-5413534-0-0
TOP DOCUMENT NUMBER: RL02

D I G I T A L

TITLE PARTS LIST
D.C. SERVO AND POWER SUPPLY

DOCUMENT NUMBER

| SIZE | CODE | NUMBER | REV |
|---|---|---|---|
| K | PL | 5413534-0-DBP | E |

FILE NAME: Z0494E.PLS
EDIT #: 22





| LINE | ITEM | DOCUMENT NUMBER | PART NUMBER | DESCRIPTION | QTY PER VARIATION 00 | REFERENCE DESIGNATOR |
|---|---|---|---|---|---|---|
| 30 | 30 | | 1312924-00 | 10.70 K .25 W 1.0 % RN55D-F10 | 1 | R32 |
| 31 | 31 | | 1309412-00 | 18.20 K .25 W 1.0 % RN55D-F10 | 1 | R33 |
| 32 | 32 | | 1315436-00 | 52.30 K .25 W 1.0 % RN55D-F10 | 1 | R54 |
| 33 | 33 | | 1304843-00 | 243.0 K .25 W 1.0 % RN55D-F10 | 1 | R72 |
| 34 | 34 | | 1315437-00 | 237.0 K .25 W 1.0 % RN55D-F10 | 1 | R38 |
| 35 | 35 | | 1302378-00 | 51.0 .50 W 5.0 % CC | 1 | R51 |
| 36 | 36 | | 1300364-00 | 1.0 K .50 W 5.0 % CC | 2 | R18,R48 |
| 37 | 37 | | 1314068-00 | 360.0 1.0 W 5.0 % CC | 1 | R4 |
| 38 | 38 | | 1300368-00 | 1.0 K 1.0 W 5.0 % CC | 1 | R8 |
| 39 | 39 | | 1301494-00 | 200.0 2.0 W 5.0 % CC | 1 | R50 |
| 40 | 40 | | 1313358-00 | .20 5.0 W 3.0 % WW | 2 | R2,R52 |
| 41 | 41 | | 1105796-00 | 1N 4004 PIV=400 I= 1A D041 SP | 3 | D1,D2,D5 |
| 42 | 42 | | 1113953-00 | 1N 5523D VZ= 5.1 1% | 8 | D4,D6,D8,D9,D16,D18,D21,D22 |
| 43 | 43 | | 1109990-00 | 1N 757A VZ= 9.1 5% .40W P | 2 | D23,D24 |
| 44 | 44 | | 1110994-00 | 1N 751A VZ= 5.1 5% .40W | 1 | D14 |
| 45 | 45 | | 1114117-00 | 1N 4152 PIV=40 I=75 | 6 | D3,D7,D10,D11,D12,D13 |
| 46 | 46 | | 1111577-00 | 1N 4454 TR= 4NS PIV= 50 S | 6 | D15,D17,D20,D25-D27 |
| 47 | 47 | | 1513698-00 | TRIAC@200V,I>14A | 1 | D19 |
| 48 | 48 | | 9009597-00 | INSULATOR, THERMA-FILM | 1 | |
| 49 | 49 | | 1513489-00 | 2N 4401 NPN 350MW SI 40 20 | 4 | Q2,Q4,Q8,Q9 |
| 50 | 50 | | 1513490-00 | 2N 4403 PNP 350MW SI-40 30 | 6 | Q1,Q3,Q5-Q7,Q11 |
| 51 | 51 | | 1511282-00 | MJ2500 PNP 150WC SI 60 5 1K 5A | 2 | E4,E6 |
| 52 | 52 | | 1511349-00 | TIP 640 (OR MJ3000) NPN DARLINGT | 1 | E3 |
| 53 | 53 | | 1911706-00 | 5012 ANALOG SWITCH,4CHNL | 1 | E8 |
| 54 | 54 | | 1912818-00 | LS38 NAND BUFFER-QUAD 2IN | 1 | E10 |
| 55 | 55 | | 1912107-01 | 324ANOP AMP,QUAD | 1 | E7 |
| 56 | 56 | | 1913695-00 | 7808 VOLT REG,FIX +8V | 1 | E9 |
| 57 | 57 | | 1913694-00 | 7908 VOLT REG,FIX -8V | 1 | E5 |
| 58 | 58 | | 9008419-00 | WASHER, FLAT, THERMAFILM .002THK | 5 | |
| 59 | 59 | | 7418595-00 | HEATSINK ASSEMBLY | 1 | |
| 60 | 60 | | 9008033-01 | SCREW,PAN,PHIL 4-40X 9/16 SS | 11 | |
| 61 | 61 | | 9006557-00 | NUT,KEP 4-40X 1/4 AF | 11 | |
| 62 | 62 | | 9006655-00 | WASHER, FLAT, .312 O.D. X .125 I | 11 | |
| 63 | 63 | | 9008268-00 | COMPOUND, THERMAL JOINT | A/R | |
| 64 | 64 | | 1210824-00 | THERMOSTAT,O@215,C@156,SPST,NORM | 1 | S1 |
| 65 | 65 | | 9008185-00 | NUT,KEP 6-32X 1/4 AF | 1 | |
| 66 | 66 | | 9006653-00 | WASHER, FLAT, .375 O.D. X .156 I | 1 | |
| 67 | 67 | | 1205747-00 | FUSE, SUB-MINI, 5.000A, 125V, A | 1 | F1 |
| 68 | 68 | | 9006735-00 | EYELET, FUNNEL FLANGE, .059 OD X | 6 | TP13-TP18 |
| 69 | 69 | | 9007791-00 | TERM PCB 2POS SOLDER,TURRET | 13 | TP0-TP12 |
| 70 | 70 | | 1213922-01 | HEADER 3POS | 1 | J1 |
| 71 | 71 | | 1213922-04 | HEADER 6POS | 1 | J2 |
| 72 | 72 | | 1213900-00 | CONN,RCPT 6POS | 1 | J3 |
| 73 | 73 | | 1209941-06 | HEADER.100 20POS RT ANGLE | 1 | J4 |
| 74 | 74 | | 1209941-04 | HEADER RT ANGLE,RIGHT | 1 | |
| 75 | 75 | | 1209941-03 | HEADER RT ANGLE LEFT L | 1 | |
| 76 | 76 | | 1305324-00 | 4.99 K .25 W 1.0 % RN55D-F10 | 2 | R37,R30 |
| 77 | 77 | | 1300250-00 | 150.0 .25 W 5.0 % CC | 1 | R42 |

TITLE D.C. SERVO AND POWER SUPPLY
SECTION A OF A

| SIZE | CODE | DOCUMENT NUMBER | REV |
|---|---|---|---|
| K | PL | 5413534-0-DBP | E |

| LINE | ITEM | DOCUMENT NUMBER | PART NUMBER | DESCRIPTION | QTY PER VARIATION 00 | REFERENCE DESIGNATOR |
|---|---|---|---|---|---|---|
| 78 | 78 | | 1312618-00 | 16.90 K .25 W 1.0 % RN55D-F10 | 1 | R40 |
| 79 | 79 | | 1300229-00 | 100.0 .25 W 5.0 % CC | 1 | R63 |
| 80 | 80 | | 1305336-00 | *** THIS ITEM IS NOT USED *** | - | |
| 81 | 81 | | 1309416-00 | 31.60 K .25 W 1.0 % RN55D-F10 | 1 | R65 |
| 82 | 82 | | 1002781-00 | 100 MFD 25V +75-10% AL EL | 1 | C20 |
| 83 | 83 | | 9009185-00 | JUMPER, WIRE, INSULATED, BLACK B | 2 | W1,W2 |
| 84 | 84 | | 1303044-00 | 100.0 K .25 W 1.0 % RN55D-F10 | 1 | R64 |
| 85 | 85 | | 1015574-00 | *** THIS ITEM IS NOT USED *** | - | |
| 86 | 86 | | 1315435-00 | 25.50 K .25 W 1.0 % RN55D-F10 | 1 | R66 |
| 87 | 87 | | 1312930-00 | 5.10 K .25 W 5.0 % CC | 1 | R67 |
| 88 | 88 | | 1015520-00 | 1 MFD 100V 5% MET. MYLR | 1 | C19 |
| 89 | 89 | | 1513697-00 | 2N 5640 FET N CHNNL | 1 | Q10 |
| 90 | 90 | | 1300479-00 | 10.0 K .25 W 5.0 % CC | 1 | R69 |
| 91 | 91 | | 1302466-00 | 100.0 K .25 W 5.0 % CC | 1 | R70 |
| 92 | 92 | | 9105740-55 | WIRE(WRAP)30AWG UL1423 | A/R | |
| 93 | 93 | | 1017472-00 | 10 MFD 35V +50-10% AL EL | 4 | C4,C6,C13,C14 |
| 94 | 94 | | 1016549-00 | 47 MFD 10V +50-10% AL EL | 1 | C2 |

| D | I | G | I | T | A | L | TITLE | SECTION A OF A | SIZE | CODE | DOCUMENT NUMBER | REV |
|---|---|---|---|---|---|---|---|---|---|---|---|---|
| | | | | | | | D.C. SERVO AND POWER SUPPLY | | K | PL | 5413534-0-DBP | E |

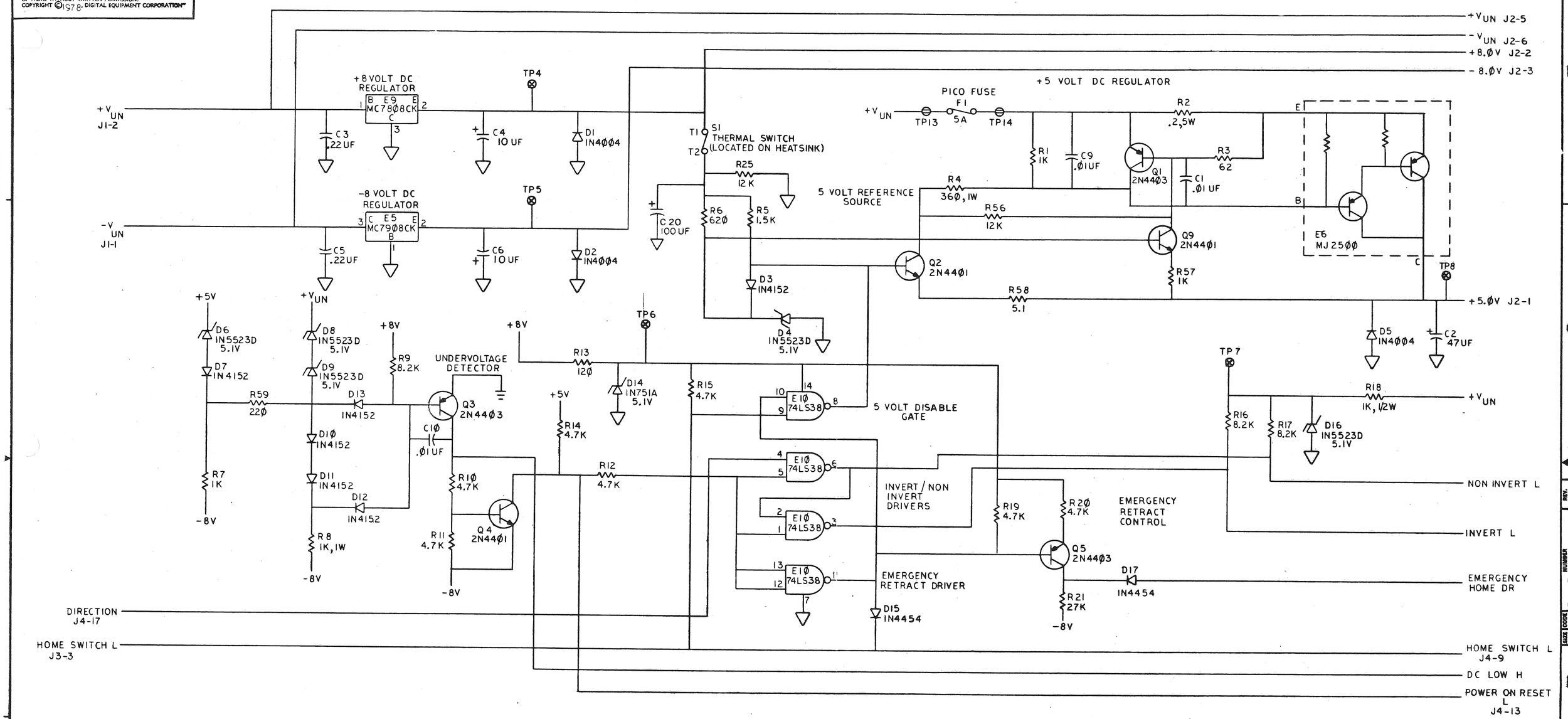


NOTES:

1. ALL RESISTORS TO BE 1/4W, 5%; UNLESS OTHERWISE SPECIFIED.
2. ~~E1 AND E2 ARE SPARES.~~
3. VALUE OF R6Ø OR R61 WILL BE DETERMINED IN TESTING.
4. INSTALL W1 AND W2 FOR RLØ1 ON SIDE 2. INSTALL W2 ONLY FOR RLØ2 ON SIDE 2.

| REV. | CHANGE NO. | CHK | |
|---|---|---|---|
| B | 5413534-CZØØ1 BOB NOGUCHI | | |
| C | 5413534-CXØ2A M. ZARICH | RDM 23 MAY 80 | |
| D | 5413534-CXØØ3 M. ZARICH | RDM 6 NOV 80 | |
| E | 5413534-CXØØ4 D.B. 17 JUNE 81 M. ZARICH | 801 | |

| DESCRIPTION | DWG./PART NO. | ITEM NO. |
|---|---|---|
| UNLESS OTHERWISE SPECIFIED DIMENSIONS ARE IN INCHES | | |

| ANGLES ±0° 30' | CLASS OF ACCURACY (CHECK ONE) | NOMINAL DIMENSION RANGE INCHES: OVER 0 TO 0.2 | OVER 0.2 TO 1.2 | OVER 1.2 TO 4.0 | OVER 4.0 TO 12.0 | OVER 12.0 TO 40.0 | OVER 40.0 TO 80.0 |
|---|---|---|---|---|---|---|---|
| SURFACE QUALITY IN MICROINCHES | MEDIUM | ±.004 | ±.008 | ±.012 | ±.016 | ±.024 | ±.04 |
| | PREFERRED | ±.012 | ±.016 | ±.025 | ±.04 | ±.063 | ±0.1 |

QUANTITY & VARIATION

THIRD ANGLE PROJECTION

REMOVE BURRS AND BREAK SHARP CORNERS

DO NOT SCALE DWG

MATERIAL

FINISH

| | | |
|---|---|---|
| DRN. R. Richard | 8/15/78 | FIRST USED ON digital |
| CHK'D | | |
| ENG. | | |
| PROJ. ENG. | 9/27/78 | TITLE DC SERVO AND POWER SUPPLY |
| PROD. | 9/27/78 | |
| NEXT HIGHER ASSY. | | |
| D-UA-5413534-0-0 | | SIZE D CODE CS NUMBER 5413534-0-1 REV. E |
| SCALE — | | |
| SHEET 1 OF 2 | | DIST. |

DFC FORM NO DRD 100-C

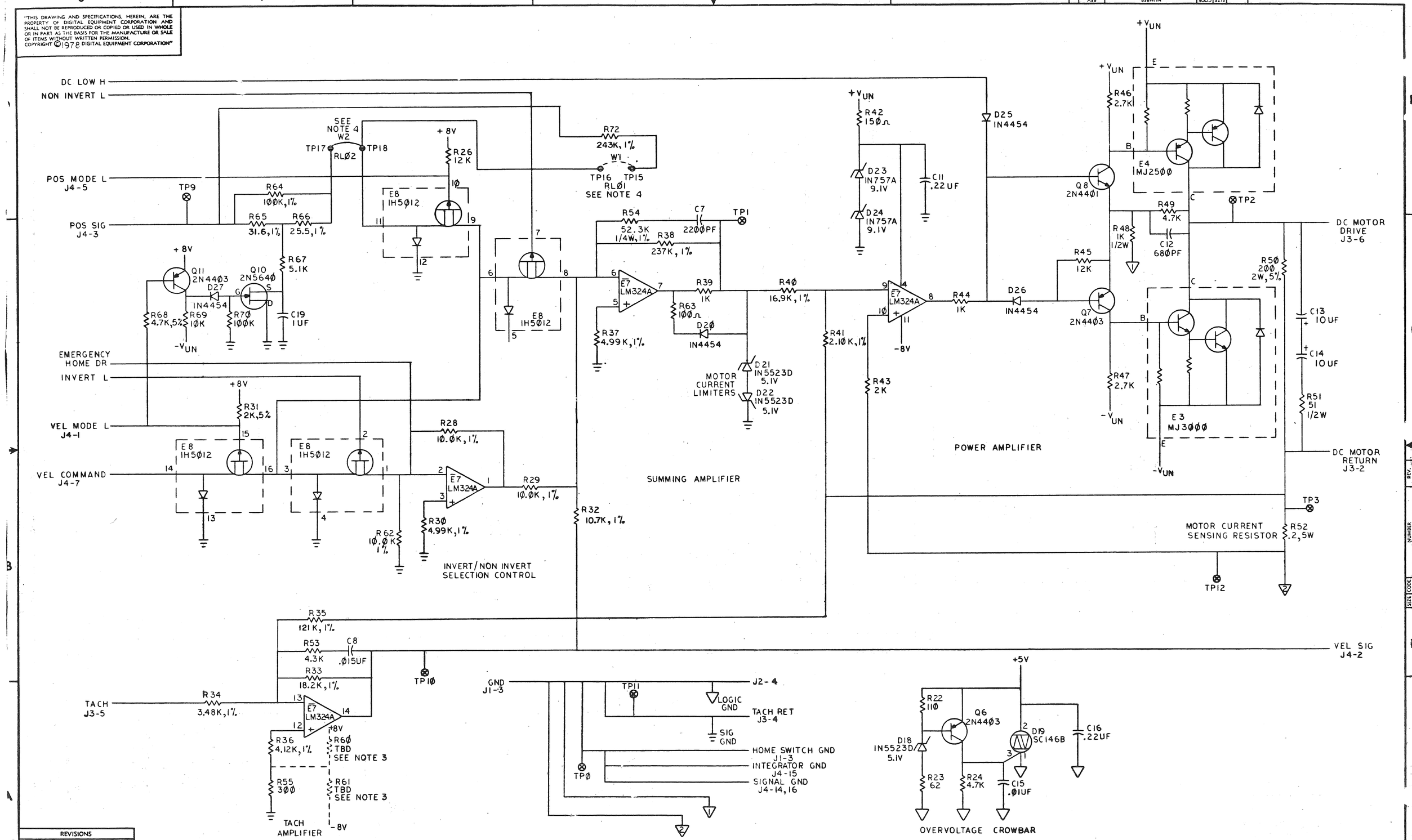


| REVISIONS | | |
|---|---|---|
| CHK | CHANGE NO. | REV. |

| TITLE | SIZE | CODE | NUMBER | REV. |
|---|---|---|---|---|
| DC SERVO AND POWER SUPPLY | D | CS | 5413534-0-1 | E |
| SCALE | SHEET 2 OF 2 | DIST. | | |

DEC FORM NO. DRD 137

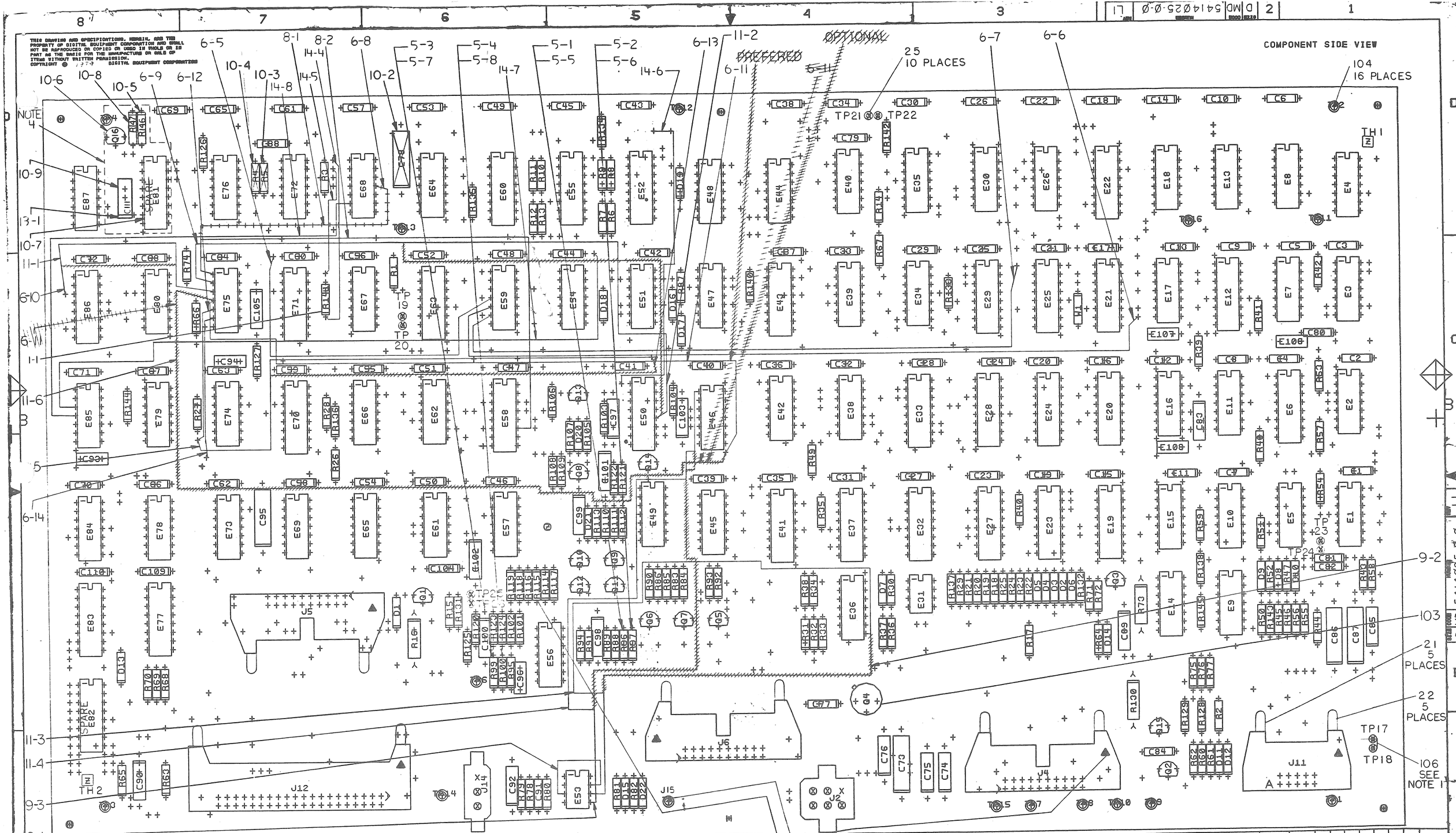


NOTES:

1. INSTALL ITEM 106 AFTER TEST (BETWEEN TP17 & TP18 ONLY).
2. VALUE OF ITEM 2 TO BE DETERMINED AT NEXT HIGHER ASSEMBLY.
3. STAMP ORIENTATION TRIANGLES ON CONNECTORS AS SHOWN WITH INDELIBLE RED INK.

| REV | CHANGE NO | |
|---|---|---|
| B | 5414025-CX001 M.BROWN | |
| C | 5414025-CX003 M.ZARICH | |
| D | 5414025-CX005 M.BROWN | |
| E | 5414025-CX016A M.BROWN | |
| F | 5414025-CX008 M.BROWN | |
| H | 5414025-CX009 M.ZARICH | |
| J | 5414025-CX004 M.BROWN | |
| K | 5414025-CX011 K.D.22 OCT 80 M.ZARICH | |
| L | 5414025-CX013 D.B. 9 FEB 81 M ZARICH | |
| L1 | 5414025-CX014 R.N. 26 FEB 81 M. ZARICH | |

ETCH REV. B
P.C. DESIGN DATA BASE REV. BL

| SIGNATURES | DATE |
|---|---|
| DRN. | |
| CHK'D. | 4-27-79 |
| ENG. | 5/21/79 |
| PROJ.ENG. | 5/21/79 |
| PROD. | |
| SCALE 2/1 | |
| SHT. 1 OF 2 | |
| NEXT HIGHER ASSY. B-DD-5414025-0 | |

digital

TITLE
DRIVE LOGIC

| SIZE | CODE | NUMBER | REV |
|---|---|---|---|
| D | UA | 5414025-0-0 | L1 |

MS#291-06

## ECO# 5414025-CX001

COMPONENT DELETE:

1-1 REMOVE R141

## ECO# 5414025-CX003

COMPONENT DELETE:

3-1 REMOVE TP5

COMPONENT ADD:

3-2 ADD J15, ITEM 109 AT PTH FOR TP5

## ECO# 5414025-CXØØ5

COMPONENT DELETES:

5-1 R96, (365 K).
5-2 R97, (30.1 K).
5-3 R99, (365 K).
5-4 R100, (30.1 K).

COMPONENT ADDS:

5-5 R96, (3.65K).
5-6 R97, (301).
5-7 R99, (3.65K).
5-8 R100, (301).

## ECO# 5414025-CXØØ6

ETCH CUTS:

6-1
6-2
6-3
6-4
} SEE D-EC-5014024-0-0

WIRE ADDS SIDE 1:

6-5 FROM E59-4 TO E71-2 (PTH TO THE LEFT OF C6Ø).
6-6 FROM E59-5 TO E21-7 (PTH TO THE RIGHT OF E21-10).
6-7 FROM E59-6 TO E25-1 (PTH TO THE LEFT OF E25-1).
6-8 FROM E75-1 TO E68-11.
6-9 FROM E75-2 TO E5Ø-12.
6-10 FROM E75-3 TO PTH TO THE LEFT OF E86-3.
6-11 FROM E75-4 TO PTH BELOW E46-8.
6-12 FROM E75-5 TO PTH BELOW R27.
6-13 FROM PTH BELOW R27 TO PTH TO THE UPPER RIGHT OF C41.
6-14 FROM E75-6 TO E73-1 (PTH ALONG ETCH ABOVE E73-1).

## ECO# 5414025-CX008

WIRE DELETE:

8-1 E68-11 TO E75-1.

WIRE ADD:

8-2 E75-1 TO E58-11.

## ECO# 5414025-CX009

WIRE ADDS:

9-1 E46 PIN 1 TO E53 PIN 5.
9-2 E36 PIN 8 TO E53 PIN 6.
9-3 E53 PIN 7 TO E53 PIN 3.

## ECO# 5414025-CXØ1ØA

COMPONENT DELETES:

10-2 REMOVE C78 (1000076-00)
10-3 REMOVE R5 (1300365-00)
10-4 REMOVE R4 (1300447-00)

COMPONENT ADDS:

10-5 ADD R146 (1302391-00)
10-6 ADD Q16 (1513489-00)
10-7 ADD E81 (1912837-00)
10-8 ADD R147 (1305608-00)
10-9 ADD C111 (1005334-00)

## ECO# 5414025-CXØ11

REROUTING INSTRUCTIONS:

11-1 REROUTE WIRE 6-10 (E75-3 TO PTH TO THE LEFT OF E86-3).
11-2 REROUTE WIRE 6-9 (E75-2 TO E50-12).
11-3 REROUTE WIRE 9-2 (E36-8 TO E53-6).
11-4 REROUTE WIRE 9-1 (E46-1 TO E53-5).
11-5 REROUTE WIRE 6-13 (FROM PTH BELOW R27 TO PTH TO THE UPPER RIGHT OF C41).

WIRE DELETES:

11-6 DELETE THE <u>OPTIONAL</u> ROUTING OF WIRE (6-11).

## ECO# 5414025-CXØ13

COMPONENT ADD:

13-1 REMOVE C111 (1005334-00) ROTATE 180° AND REPLACE.

## ECO# 5414025-CXØ14

WIRE ADDS:

14-4 ADD WIRE FROM THE FEED THRU TO THE LEFT OF E68-1 TO THE FEED THRU TO THE LEFT OF E67-6.

14-5 ADD WIRE FROM THE FEED THRU TO THE LEFT OF E68-2 TO THE FEED THRU TO THE RIGHT OF E71-16.

14-6 ADD WIRE FROM THE FEED THRU DIRECTLY ABOVE E52-16 TO THE FEED THRU TO THE LEFT OF E50-1.

14-7 ADD WIRE FROM THE FEED THRU GOING TO E54-12 ABOVE E54 TO E85-3.

14-8 ADD WIRE FROM E85-4 TO E68-6.

NOTES: CONT.

4 THESE COMPONENTS MAY OR MAY NOT APPEAR DEPENDING UPON THE ORIGINAL CS REV BEFORE INSTALLING ECO 5414025-CXØ14.

| REVISION HISTORY | | |
|---|---|---|
| DATE | ECO NUMBER | REV. |

TITLE: DRIVE LOGIC

| DOCUMENT NUMBER | | | |
|---|---|---|---|
| SIZE | CODE | NUMBER | REV. |
| D | UA | 5414025-0-0 | L1 |
| SCALE NONE | | SHEET 2 OF 2 | |

DRD 137A

AUTOMATED BY PRTLST.3H(20)

P A R T S  L I S T

SHEET A1 OF A3

| LINE | ITEM | DOCUMENT NUMBER | PART NUMBER | DESCRIPTION | QTY PER VARIATION 00 | REFERENCE DESIGNATOR |
|---|---|---|---|---|---|---|
| 1 | 1 | D-MD-5014024-0-0 | 5014024-00 | DRILL AND ETCH BRD | 1 | |
| 2 | 2 | EWS | | RESISTOR,FINAL TEST, 1/4W, 1% | 4 | R115,R116,R118,R119 |
| 3 | 3 | | 1000023-00 | 330.0 MMF 100V 5%200PPM MICA | 4 | C93,C106-C108 |
| 4 | 4 | | 1000024-00 | 470.0 MMF 100V 5%200PPM MICA | 1 | C94 |
| 5 | 5 | | 1000064-00 | 3.9MFD 10V 10% S.TANT | 2 | C76,C85 |
| 6 | 6 | | 1000076-00 | 39 MFD 10V 10% S.TANT | 3 | C73,C86,C95 |
| 7 | 7 | | 1001610-00 | .01 MFD 50V +80-20% 25U CER | 74 | C1-C6,C8-C39,C40-C45,C47-C49, |
| | | | | | | CONT C51-C53,C55-C68,C70,C71,C77, |
| | | | | | | CONT C79-C82,C84,C88,C104 |
| 8 | 8 | | 1001776-00 | 1 MFD 35V 10% S.TANT | 4 | C74,C75,C92,C97 |
| 9 | 9 | | 1004812-00 | 15 MFD 20V 10% S.TANT | 1 | C87 |
| 10 | 10 | | 1005784-00 | .01 MFD 100V 10% MYLR | 1 | C101 |
| 11 | 11 | | 1010978-32 | .047 MFD 50V 10% CER | 1 | C96 |
| 12 | 12 | | 1013466-07 | 220.0 MMF 50V 5% CER | 1 | C91 |
| 13 | 13 | | 1013466-08 | 680.0 MMF 50V 10% X7R CER | 2 | C89,C90 |
| 14 | 14 | | 1013466-09 | 1000.0 MMF 50V 10% X7R CER | 1 | C83 |
| 15 | 15 | | 1013466-10 | 3300.0 MMF 50V 5% CER | 4 | C98,C100,C103,C105 |
| 16 | 16 | | 1013466-11 | .22 MFD 50V +80-20% Z5U CER | 2 | C99,C102 |
| 17 | 17 | | 1111577-00 | 1N 4454 TR= 4NS PIV= 50 S | 16 | D1,D7-D20,D22 |
| 18 | 18 | | 1113953-00 | 1N 5523D VZ= 5.1 1% | 1 | D21 |
| 19 | 19 | | 1114117-00 | 1N 4152 PIV=40 I=75 | 5 | D2-D6 |
| 20 | 20 | | 1209941-02 | HEADER 100 40POS RT ANGLE | 1 | J12 |
| 21 | 21 | | 1209941-03 | HEADER RT ANGLE LEFT L | 5 | |
| 22 | 22 | | 1209941-04 | HEADER RT ANGLE,RIGHT | 5 | |
| 23 | 23 | | 1209941-05 | HEADER,100 10POS RT ANGLE | 1 | J11 |
| 24 | 24 | | 1209941-06 | HEADER,100 20POS RT ANGLE | 3 | J4-J6 |
| 25 | '25 | | 1210385-01 | PIN 1POS WIRE WRAP | 10 | TP17-TP26 |
| 26 | 26 | | 1213922-02 | HEADER 3POS | 1 | J14 |
| 27 | 27 | | 1213922-04 | HEADER 6POS | 1 | J2 |
| 28 | 28 | | 1300229-00 | 100.0 .25 W 5.0 % CC | 5 | R48,R133-R136 |

| REVISION HISTORY | | | BASIC PART NO: 5414025 |
|---|---|---|---|
| ENG | ECO NUMBER | REV | SECTION A OF A |
| | INITIAL | A | SECTION,VARIATION INDEX |
| MB | 5414025-CX001 | B | [A] 00 |
| MB | 5414025-CX002 | C | [B] |
| MZ | 5414025-CX003 | D | [C] |
| MB | 5414025-CX005 | E | [D] |
| MB | 5414025-CX010A | F | [E] |
| MZ | 5414025-CX014 | H | [F] |
| | W.C.M. 2 MAR 81 | | [H] |
| | M. Zarch 3/2/81 | | [J] |
| | | | [K] |
| | | | [L] |
| | | | [M] |
| | | | [N] |

| | | | |
|---|---|---|---|
| DRN: | ART SIMM | DATE: 18-APR-79 | D I I G I T A L |
| CHK'D: | P. KENDRICK | DATE: 18-APR-79 | TITLE PARTS LIST |
| DES.ENG: | MIKE BROWN | DATE: 18-APR-79 | DRIVE LOGIC |
| RESP.ENG.: | MIKE BROWN | DATE: 18-APR-79 | DOCUMENT NUMBER |
| MFG.ENG.: | D. LICK | DATE: 18-APR-79 | SIZE K CODE PL NUMBER 5414025-0-DBP REV H |
| ASSEMBLY NUMBER: | D-UA-5414025-0-0 | TOP DOCUMENT NUMBER: $RL02 | FILE NAME: Z0496H.PLS EDIT # 31 |



AUTOMATED BY PRTLST.3H(20)

P A R T S  L I S T

SHEET A2 OF A3

| LINE | ITEM | DOCUMENT NUMBER | PART NUMBER | DESCRIPTION | QTY PER VARIATION 00 | REFERENCE DESIGNATOR |
|---|---|---|---|---|---|---|
| 29 | 29 | | 1300271-00 | 220.0 .25 W 5.0 % CC | 4 | R3,R14,R41,R143 |
| 30 | 30 | | 1300315-00 | 470.0 .50 W 5.0 % CC | 3 | R16,R73,R130 |
| 31 | 31 | | 1300316-00 | 470.0 .25 W 5.0 % CC | 4 | R1,R2,R79,R142 |
| 32 | 32 | | 1300365-00 | 1.0 K .25 W 5.0 % CC | 15 | R15,R39,R40,R42,R47,R52,R54,R56, |
| | | | | | | CONT R61,R72,R74,R101,R106,R129,R140 |
| 33 | 33 | | 1300411-00 | 2.0 K .25 W 1.0 % RN55D-F10 | 1 | R144 |
| 34 | 34 | | 1300439-00 | 3.30 K .25 W 5.0 % CC | 3 | R93,R124,R126 |
| 35 | 35 | | 1300447-00 | 4.70 K .25 W 5.0 % CC | 35 | R6-R13,R26-R28,R34,R35,R38,R43, |
| | | | | | | CONT R44,R49,R53,R57,R58,R62,R75-R78, |
| | | | | | | CONT R80,R82,R92,R102,R105,R123,R125, |
| | | | | | | CONT R127,R138,R145 |
| 36 | 36 | | 1300479-00 | 10.0 K .25 W 5.0 % CC | 2 | R70,R107 |
| 37 | 37 | | 1302388-00 | 2.0 K .25 W 5.0 % CC | 13 | R18-R21,R45,R50,R66,R67,R71,R87, |
| | | | | | | CONT R122,R128,R131 |
| 38 | 38 | | 1302391-00 | 20.0 K .25 W 5.0 % CC | 1 | R59 |
| 39 | 39 | | 1302394-00 | 30.0 K .25 W 5.0 % CC | 1 | R95 |
| 40 | 40 | | 1302398-00 | 470.0 K .25 W 5.0 % CC | 1 | R55 |
| 41 | 41 | | 1302466-00 | 100.0 K .25 W 5.0 % CC | 1 | R121 |
| 42 | 42 | | 1302514-00 | 39.0 K .25 W 5.0 % CC | 2 | R91,R120 |
| 43 | 43 | | 1302666-00 | 10.0 M .25 W 5.0 % CC | 1 | R94 |
| 44 | 44 | | 1302871-00 | 1.21 K .25 W 1.0 % RN55D-F10 | 1 | R88 |
| 45 | 45 | | 1303044-00 | 100.0 K .25 W 1.0 % RN55D-F10 | 1 | R25 |
| 46 | 46 | | 1303047-00 | 464.0 .25 W 1.0 % RN55D-F10 | 5 | R64,R65,R83,R85,R113 |
| 47 | 47 | | 1303114-00 | 1.0 K .25 W 1.0 % RN55D-F10 | 2 | R89,R117 |
| 48 | 48 | | 1303312-00 | 10.0 K .25 W 1.0 % RN55D-F10 | 7 | R17,R29-R31,R36,R60,R63 |
| 49 | 49 | | 1304693-00 | 562.0 .25 W 1.0 % RN55D-F10 | 1 | R108 |
| 50 | 50 | | 1304841-00 | 75.0 K .25 W 5.0 % CC | 1 | R81 |
| 51 | 51 | | 1304862-00 | 1.62 K .25 W 1.0 % RN55D-F10 | 1 | R110 |
| 52 | 52 | | 1304870-00 | 6.81 K .25 W 1.0 % RN55D-F10 | 1 | R33 |
| 53 | 53 | | 1305124-00 | 287.0 .25 W 1.0 % RN55D-F10 | 2 | R84,R86 |
| 54 | 54 | | 1305265-00 | 39.20 K .25 W 1.0 % RN55D-F10 | 1 | R24 |
| 55 | 55 | | 1305337-00 | 3.65 K .25 W 1.0 % RN55D-F10 | 2 | R96,R99 |
| 56 | 56 | | 1305405-00 | 24.90 K .25 W 1.0 % RN55D-F10 | 1 | R23 |
| 57 | 57 | | 1309595-00 | 1.0 M .25 W 5.0 % CC | 3 | R46,R51,R132 |
| 58 | 58 | | 1310632-00 | 2.37 K .25 W 1.0 % RN55D-F10 | 1 | R109 |
| 59 | 59 | | 1317303-00 | 301.0 .25 W 1.0 % RN55D-F10 | 2 | R97,R100 |
| 60 | 60 | | 1312929-00 | 62.0 .25 W 5.0 % CC | 2 | R111,R112 |
| 61 | 61 | | 1312930-00 | 5.10 K .25 W 5.0 % CC | 3 | R68,R69,R137 |
| 62 | 62 | | 1312989-00 | 17.80 K .25 W 1.0 % RN55D-F10 | 3 | R22,R103,R104 |
| 63 | 63 | | 1313589-00 | 1.40 K .25 W 1.0 % RN55D-F10 | 1 | R90 |
| 64 | 64 | | 1313846-00 | 2.26 K .25 W 1.0 % RN55D-F10 | 1 | R32 |
| 65 | 65 | | 1314041-00 | 3.01 K .25 W 1.0 % RN55D-F10 | 1 | R37 |
| 66 | 66 | | 1314491-00 | 1.02 K .25 W 1.0 % RN55D-F10 | 1 | R114 |
| 67 | 67 | | 1513489-00 | 2N 4401 NPN 350MW SI 40 20 | 3 | Q7,Q10,Q12 |
| 68 | 68 | | 1513490-00 | 2N 4403 PNP 350MW SI-40 30 | 10 | Q1-Q3,Q5,Q6,Q8,Q9,Q11,Q13,Q15 |
| 69 | 69 | | 1513697-00 | 2N 5640 FET N CHNNL | 1 | Q14 |
| 70 | 70 | | 1909928-00 | 7416 INVERTER GATE-HEX 1I | 4 | E9,E10,E68,E85 |
| 71 | 71 | | 1910046-00 | 7442 DECODER-1 OF 10,BCD | 1 | E55 |

| D | I | I | G | I | T | A | L | TITLE DRIVE LOGIC | SECTION A OF A | SIZE K | CODE PL | DOCUMENT NUMBER 5414025-0-DBP | REV H |
|---|---|---|---|---|---|---|---|---|---|---|---|---|---|

| LINE | ITEM | DOCUMENT NUMBER | PART NUMBER | DESCRIPTION | QTY PER VARIATION 00 | REFERENCE DESIGNATOR |
|---|---|---|---|---|---|---|
| 72 | 72 | | 1910268-00 | DEC 75107B RECEIVER,LINE,DUAL, | 4 | E57,E61,E65,E87 |
| 73 | 73 | | 1910298-00 | 741 OP AMP GEN PURP. COM | 1 | E31 |
| 74 | 74 | | 1910363-00 | 7496 SHIFT REG.,5BIT | 1 | E63 |
| 75 | 75 | | 1910536-00 | 74S10 NAND GATE-TRIPLE 3IN | 1 | E45 |
| 76 | 76 | | 1910655-00 | 74157 MUX 2 TO 1 QUAD | 2 | E23,E24 |
| 77 | 77 | | 1911341-00 | 75113 DRIVER,LINE,DUAL,MA | 3 | E77,E83,E86 |
| 78 | 78 | | 1912107-01 | 324ANOP AMP,QUAD | 1 | E49 |
| 79 | 79 | | 1912108-00 | 339 VOLT CMPRTR,QUAD | 3 | E5,E36,E56 |
| 80 | 80 | | 1912541-00 | 79M05 VOLT REG,FIX -5V | 1 | Q4 |
| 81 | 81 | | 1912697-00 | LS174 FF-D HEX W/CLEAR | 2 | E37,E41 |
| 82 | 82 | | 1912799-00 | LS00 NAND-GATE-QUAD 2IN,P | 4 | E7,E15,E44,E67 |
| 83 | 83 | | 1912801-00 | LS02 NOR-GATE-QUAD 2IN | 4 | E1,E30,E39,E54 |
| 84 | 84 | | 1912803-00 | 6S04 INVERTER GATE,HEL | 2 | E79,E80 |
| 85 | 85 | | 1912805-00 | LS08 AND GATE-QUAD 2IN,PO | 6 | E14,E34,E38,E69,E72,E76 |
| 86 | 86 | | 1912807-00 | LS10 NAND GATE-TRIPLE 3IN | 1 | E18 |
| 87 | 87 | | 1912810-00 | LS20 NAND GATE-DUAL 4IN | 1 | E2 |
| 88 | 88 | | 1912813-00 | LS27 NOR GATE-TRIPLE 3IN | 1 | E73 |
| 89 | 89 | | 1912816-00 | LS32 OR GATE-QUAD 2IN,POS | 4 | E17,E35,E59,E84 |
| 90 | 90 | | 1912824-00 | LS74 FF-D DUAL,EDGE TRIGG | 9 | E3,E11,E16,E26,E42,E46,E47,E62, |
| | | | | | | CONT E75 |
| 91 | 91 | | 1912829-00 | LS86 X-OR GATE-QUAD 2IN | 3 | E51,E66,E78 |
| 92 | 92 | | 1912837-00 | LS123 ONE SHOT-DUAL,RETRIG | 1 | E50 |
| 93 | 93 | | 1912854-00 | LS193 COUNTER,SYNCHR,4BIT, | 3 | E27,E28,E43 |
| 94 | 94 | | 1912855-00 | LS195 SHIFT REG.,4BIT PARA | 5 | E19-E22,E25 |
| 95 | 95 | | 1912857-00 | LS197 COUNTER,BINARY,PRESET | 4 | E4,E8,E13,E74 |
| 96 | 96 | | 1912864-00 | LS279 LATCH,QUAD-S-R | 6 | E6,E12,E29,E33,E58,E71 |
| 97 | 97 | | 1913414-00 | LS14 INVERTER GATE-HEX SC | 2 | E40,E48 |
| 98 | 98 | | 1914156-00 | LM 393 VOLT.COMPARATOR DUAL | 1 | E53 |
| 99 | 99 | | 23368A2-00 | A2-02,A2-04 | 1 | E52 |
| 100 | 100 | | 23371A2-00 | A2-02,A2-04 | 1 | E60 |
| 101 | 101 | | 23444A2-00 | A2-02,A2-04 | 1 | E70 |
| 102 | 102 | | 23445A2-00 | A2-02,A2-04 | 1 | E32 |
| 103 | 103 | | 9007201-00 | TRANSIPADS #10253 | 1 | |
| 104 | 104 | | 9007791-00 | TERM PCB 2POS SOLDER,TURRET | 15 | TP1-TP4,TP6-TP16 |
| 105 | 105 | | 9009185-00 | JUMPER, WIRE, INSULATED, BLACK B | 1 | W1 |
| 106 | 106 | | 9105740-55 | WIRE(WRAP)30AWG UL1423 | A/R | |
| 107 | 107 | | 1012784-00 | .047 MFD 50V +80-20% CER | 8 | C7,C46,C50,C54,C69,C72,C109,C110 |
| 108 | 108 | | 1911324-00 | 7414 INVERTER,HEX 1IN SCH | 1 | E64 |
| 109 | 109 | | 1217377-00 | TERM QUICK 1POS TAB PC MNT | 1 | J15 |
| 110 | 110 | | 1005334-00 | *** THIS ITEM IS NOT USED *** | - | |
| 111 | 111 | | 1305608-00 | *** THIS ITEM IS NOT USED *** | - | |

| D | I | G | I | T | A | L | TITLE | SECTION A OF A |
|---|---|---|---|---|---|---|---|---|
| | | | | | | | DRIVE LOGIC | |

| SIZE | CODE | DOCUMENT NUMBER | REV |
|---|---|---|---|
| K | PL | 5414025-0-DBP | H |

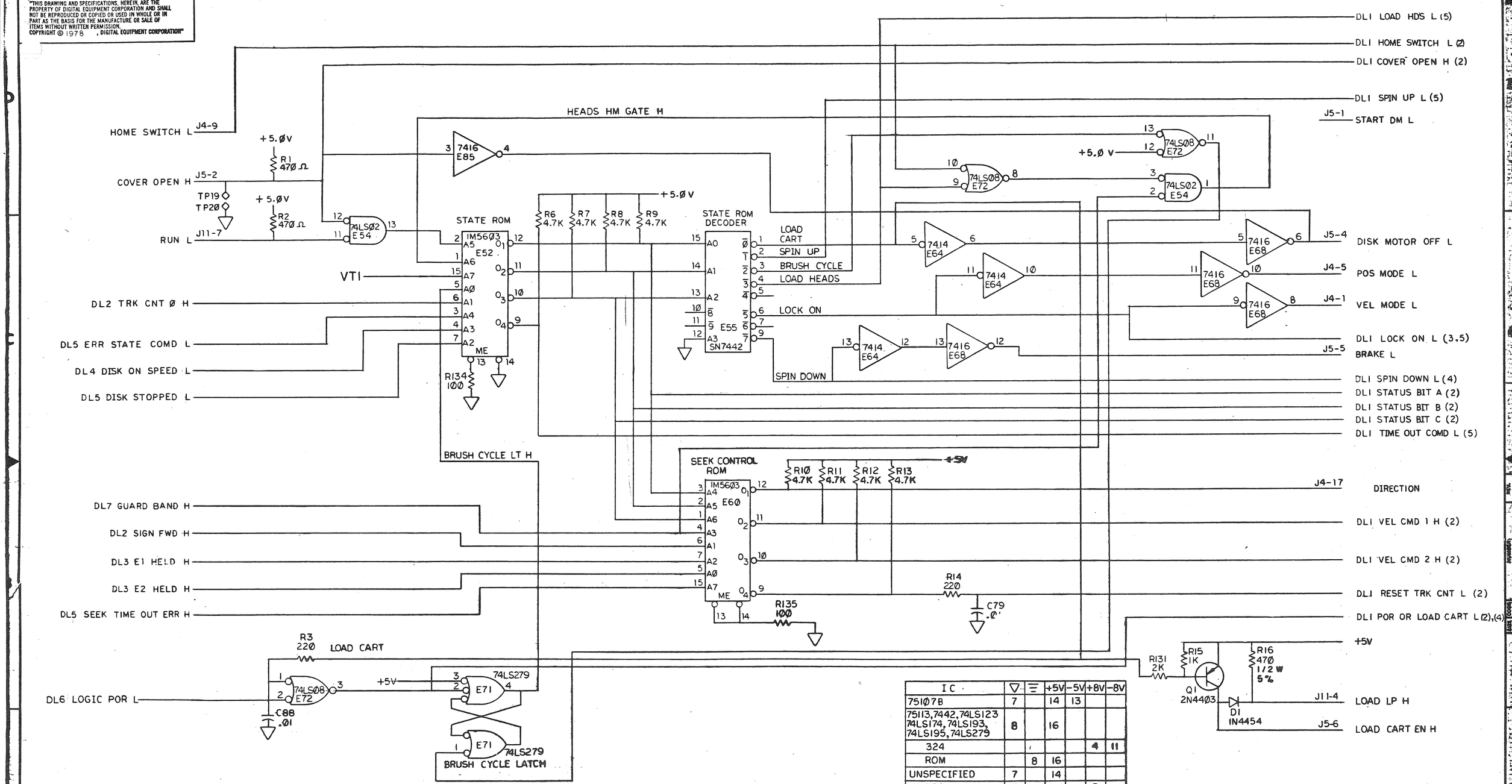


| IC | ▽ | ≡ | +5V | -5V | +8V | -8V |
|---|---|---|---|---|---|---|
| 75107B | 7 | | 14 | 13 | | |
| 75113,7442,74LS123 74LS174,74LS193, 74LS195,74LS279 | 8 | | 16 | | | |
| 324 | | | | | 4 | 11 |
| ROM | | 8 | 16 | | | |
| UNSPECIFIED | 7 | | 14 | | | |
| 339 | 12 | | | | 3 | |
| 339 | | | | | 3 | 12 |
| 339 | | 12 | | | 3 | |

VALID FOR REV L1 AND L2

| REVISIONS | | | | | | | | | | | | |
|---|---|---|---|---|---|---|---|---|---|---|---|---|
| REV. | B | C | D | E | F | FI | H | J | K | L | L1 | |
| CHANGE NO. | 5414025-CX001 M. BROWN | 5414025-CX002 M. BROWN | 5414025-CX003 M. ZARICH | 5414025-CX005 MIKE BROWN | 5414025-CX006A MIKE BROWN | 5414025-CX008 M. BROWN | 5414025-CX009 D.C. 18 AUG 80 M. ZARICH | 5414025-CX010A M. BROWN | 5414025-CX012 K. DAVISON 24 NOV 80 S. MANDRACCIA | 5414025-CX013 D.B. 10 FEB 81 M. ZARICH | 5414025-CX014 R.N. 25 FEB 81 M. ZARICH | |
| CHK | 631 | 754 | 780 | | | | | | | | | |

L2

| | | | |
|---|---|---|---|
| DRN. | 5 JUNE 79 | FIRST USED ON | digital |
| CHK'D | 3 MAY 80 | TITLE | DRIVE LOGIC (STATE CONTROL LOGIC) (DLI) |
| ENG. | 5 JUNE 79 | | |
| PROJ. ENG. | 5 JUNE 79 | | |
| PROD. | | | |
| NEXT HIGHER ASSY. | B-DD-5414025-C | SIZE D | CODE CS |
| SCALE | | NUMBER 5414025-0-1 | REV. L1 |
| SHEET 1 OF 8 | | DIST. | |

L2

DEC FORM NO. DRD 102-D

| CMD 2 | CMD 1 | MODE | VEL |
|---|---|---|---|
| Ø | Ø | OFF | Ø |
| Ø | 1 | GUARD BAND | 3 IPS |
| 1 | Ø | HEAD LOAD | 6 IPS |
| 1 | 1 | HEAD UNLOAD | 15 IPS |

NOTES:

1. W1 IN FOR RLØ1.
   W1 OUT FOR RLØ2.
2. W2 NOT FOR FIELD USE.
   (W2 IS ON DL5 PAGE)
3. J5-17 (SH. 1) MAY BE ACTIVE FROM THE BRUSH DRIVE ASSY, BUT THE BRUSHES CAN BE REMOVED FROM THE DRIVE WHEN USING CS REV H OR LATER.

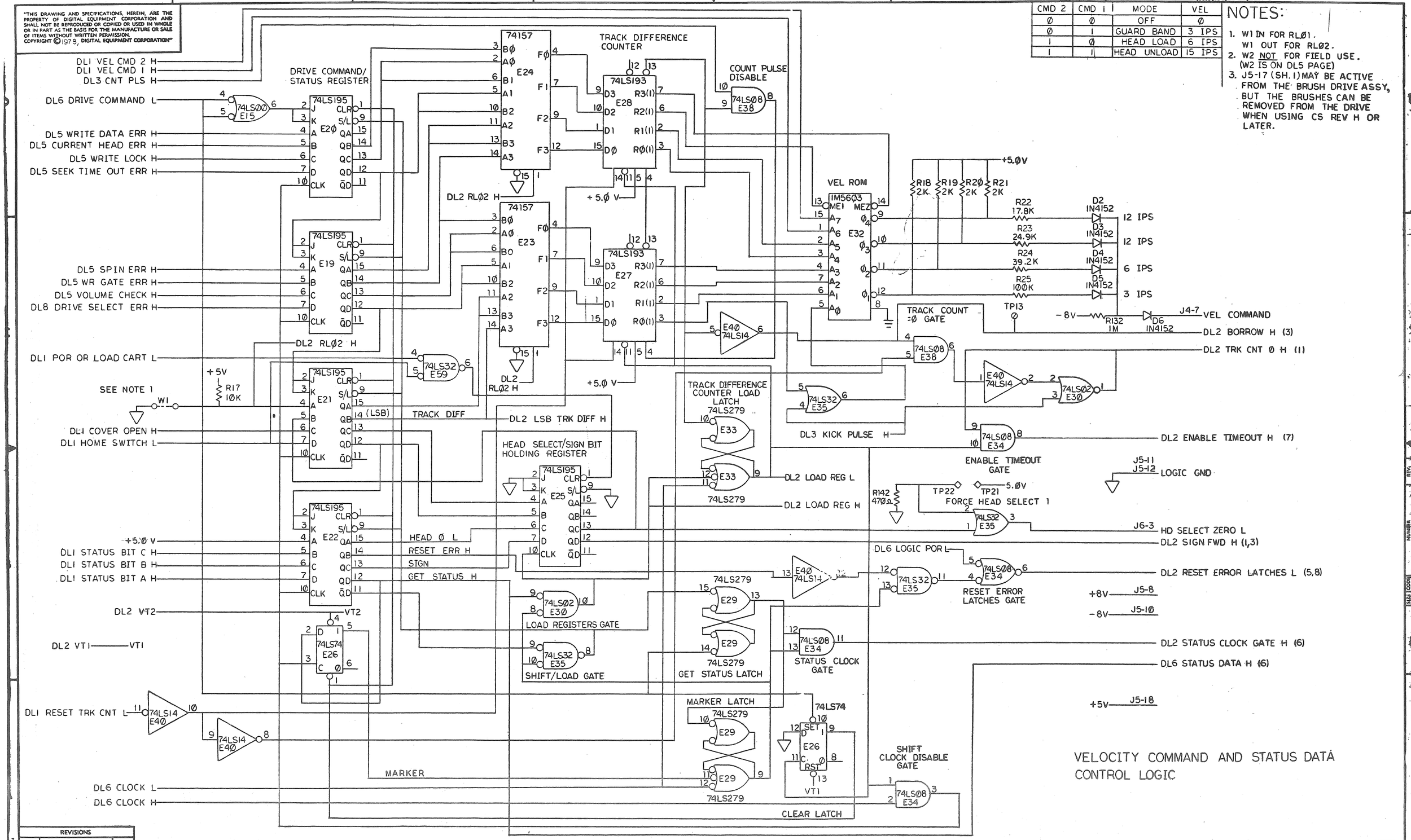


| REVISIONS | | |
|---|---|---|
| CHK | CHANGE NO. | REV. |

| TITLE | SIZE | CODE | NUMBER | REV. |
|---|---|---|---|---|
| DRIVE LOGIC (DL2) | D | CS | 5414025-0-1 | L1 |
| SCALE — | SHEET 2 OF 8 | DIST. | | |

DEC FORM NO. DRD 137

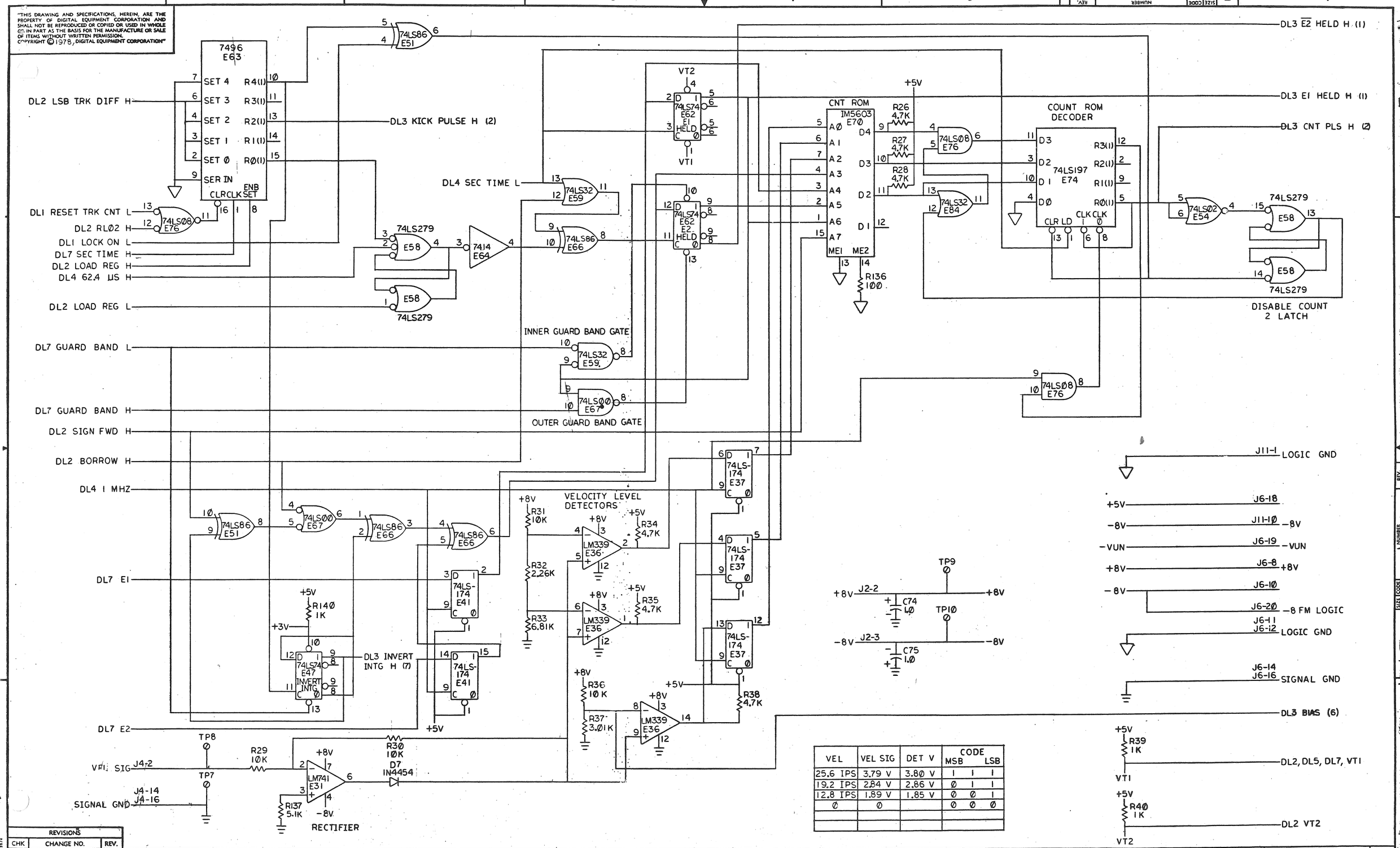


| VEL | VEL SIG | DET V | CODE MSB | | LSB |
|---|---|---|---|---|---|
| 25.6 IPS | 3.79 V | 3.8Ø V | 1 | 1 | 1 |
| 19.2 IPS | 2.84 V | 2.86 V | Ø | 1 | 1 |
| 12.8 IPS | 1.89 V | 1.85 V | Ø | Ø | 1 |
| Ø | Ø | | Ø | Ø | Ø |
| | | | | | |
| | | | | | |

| REVISIONS | | |
|---|---|---|
| CHK | CHANGE NO. | REV. |

TITLE DRIVE LOGIC (COUNT LOGIC) (DL3)

SIZE D CODE CS NUMBER 5414025-0-1 REV. L1

SCALE — SHEET 3 OF 8 DIST.

DEC FORM NO. DRD 137

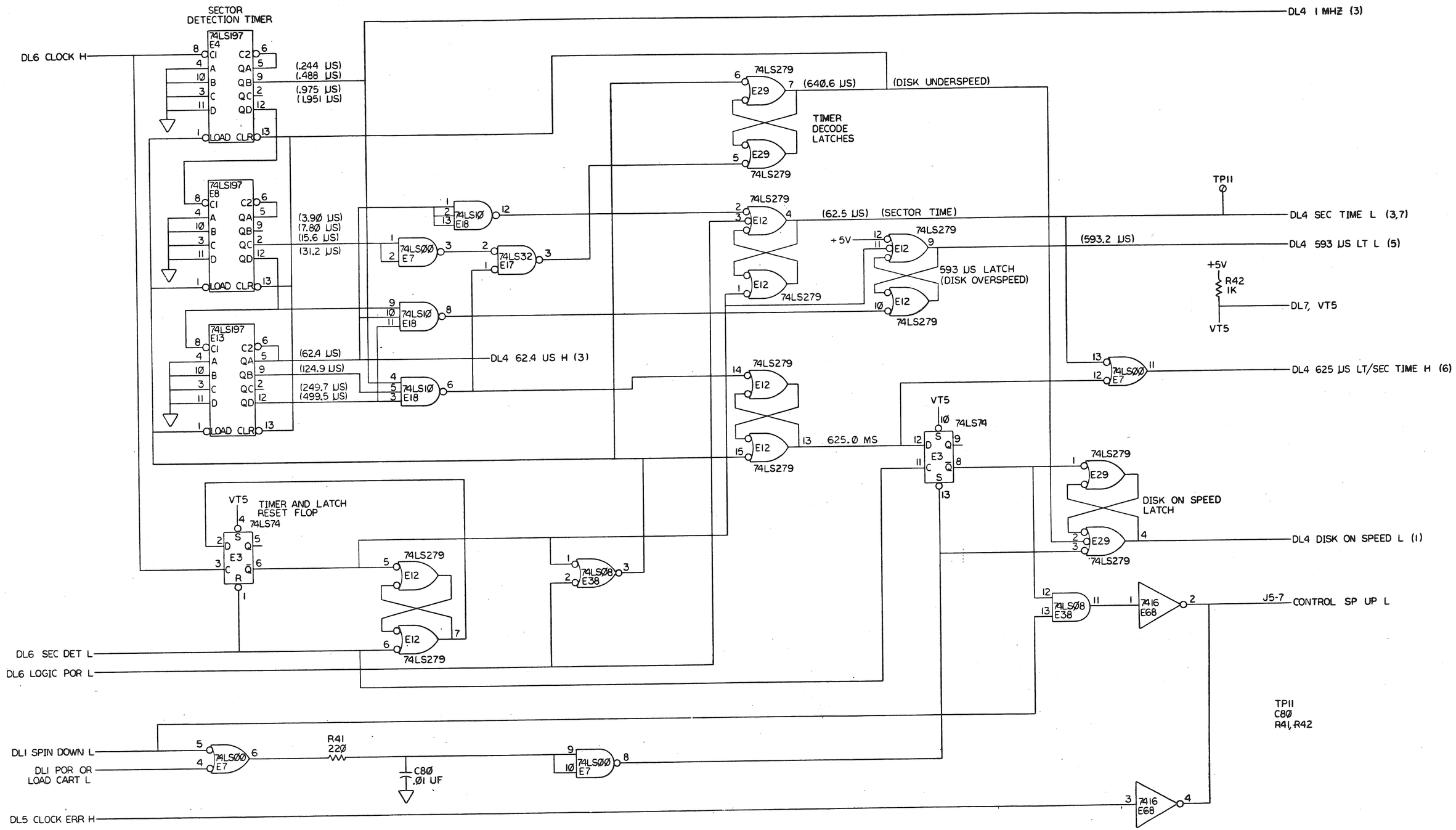


| REVISIONS | | |
|---|---|---|
| CHK | CHANGE NO. | REV. |

TITLE DRIVE LOGIC (DISK SPEED CONTROL) (DL4)

SIZE D CODE CS NUMBER 5414025-0-1 REV. L1

SCALE — SHEET 4 OF 8 DIST.

DEC FORM NO. DEC 1977

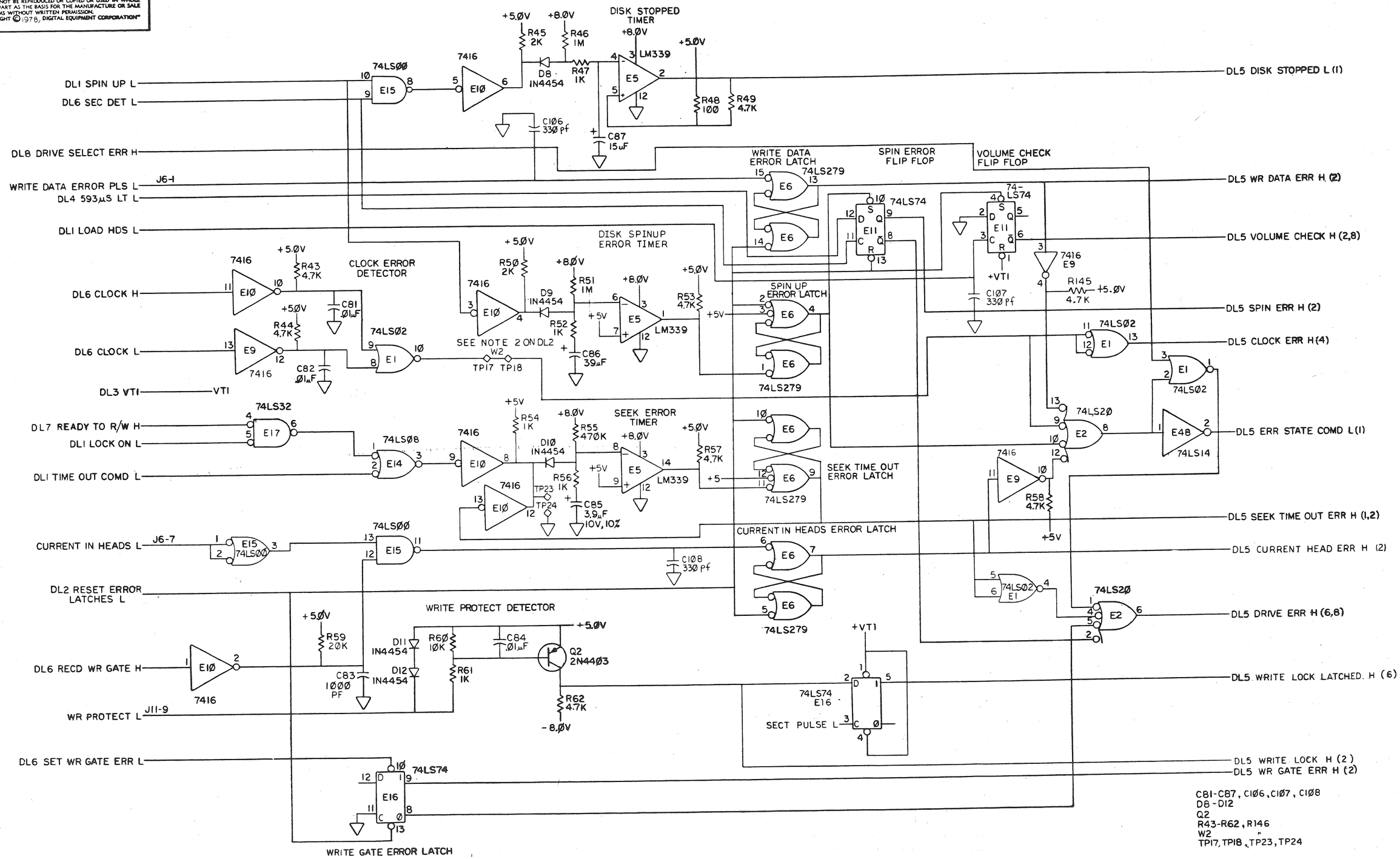


| REVISIONS | | |
|---|---|---|
| CHK | CHANGE NO. | REV. |

| TITLE | SIZE | CODE | NUMBER | REV. |
|---|---|---|---|---|
| DRIVE LOGIC (ERROR LOGIC) (DL5) | D | CS | 5414025-0-1 | L1 |
| SCALE — / — | SHEET 5 OF 8 | | DIST. | |

DEC FORM NO. DRD 137

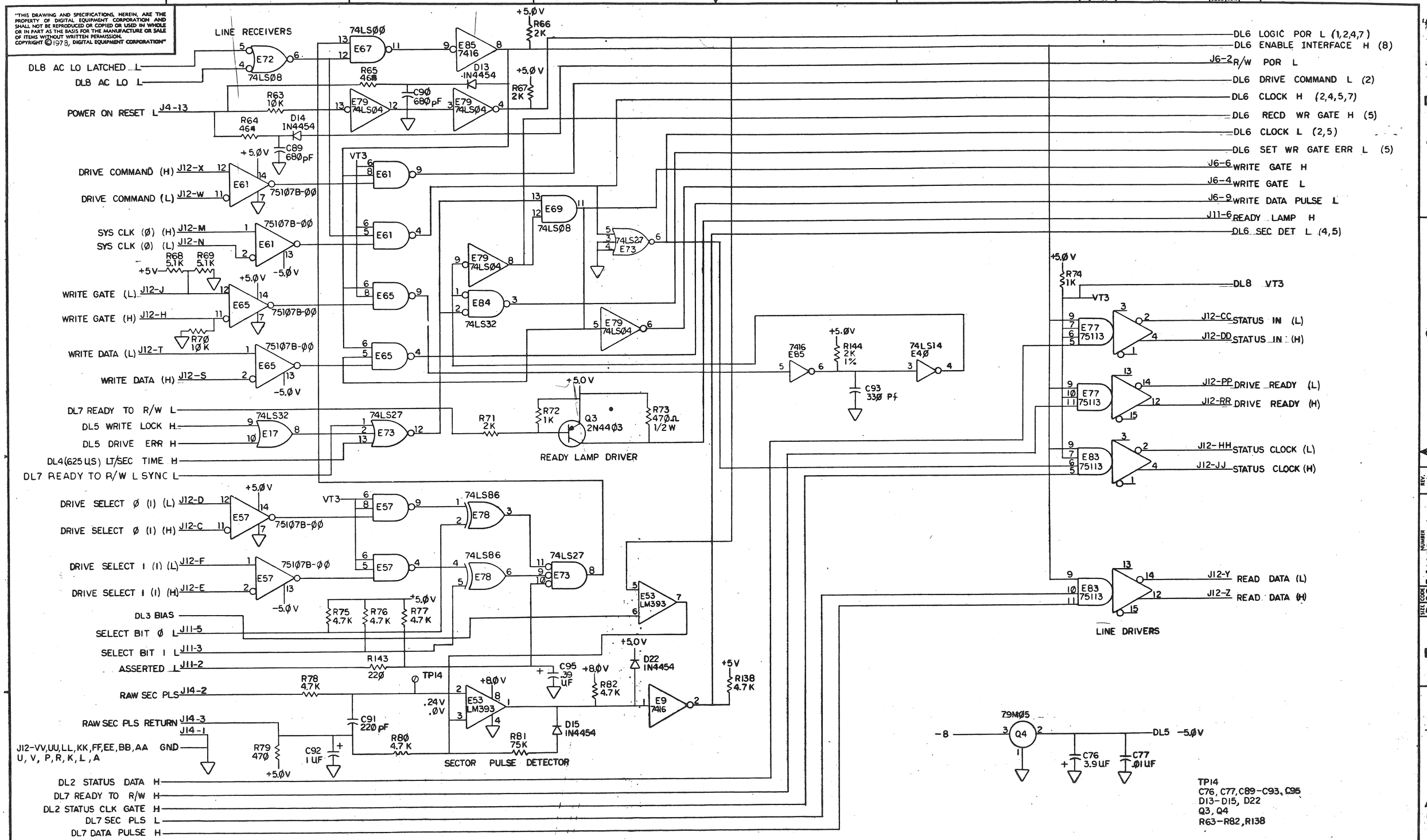


| REVISIONS | | |
|---|---|---|
| CHK | CHANGE NO. | REV. |

TITLE DRIVE LOGIC (INTERFACE LOGIC) (DL6)

SIZE D CODE CS NUMBER 5414025-0-1 REV. L1

SCALE — SHEET 6 OF 8 DIST.

DEC FORM NO. BRD 137

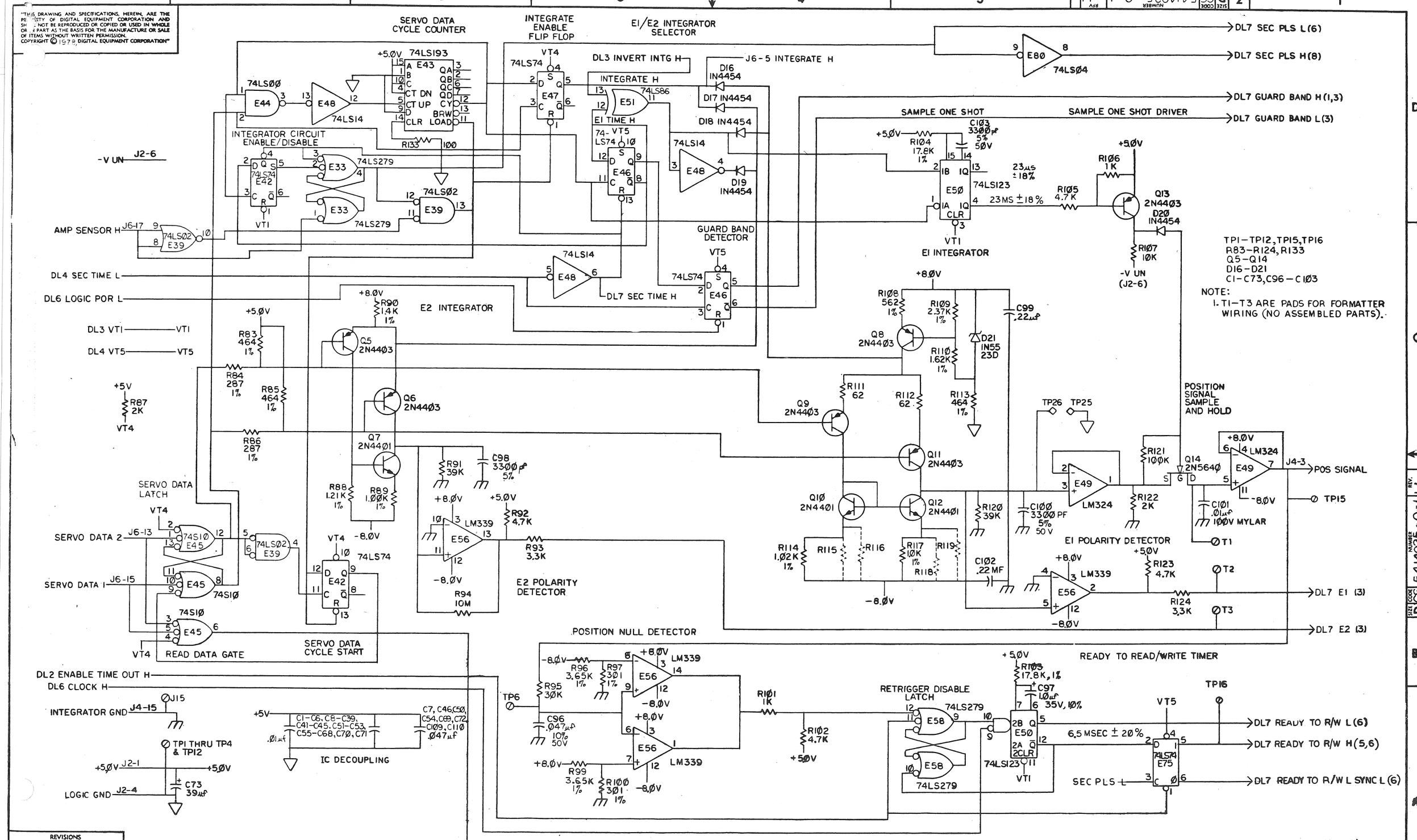


| REVISIONS | | |
|---|---|---|
| CHK | CHANGE NO. | REV. |

| TITLE | SIZE | CODE | NUMBER | REV. |
|---|---|---|---|---|
| DRIVE LOGIC (INTEGRATOR LOGIC) (DL7) | D | CS | 5414025-Ø-1 | L1 |
| SCALE — / — | SHEET 7 OF 8 | DIST. | | |

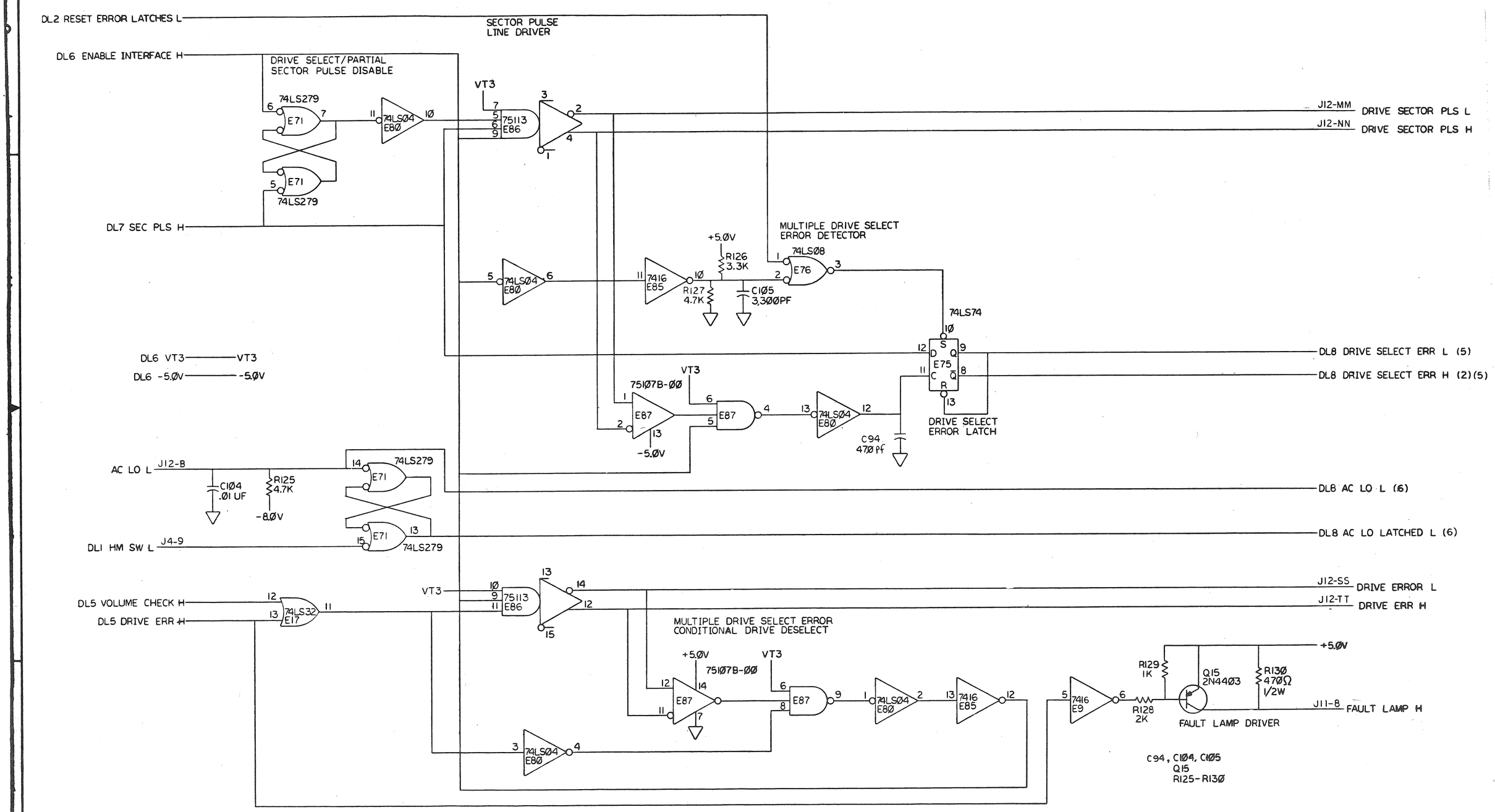


| REVISIONS | | |
|---|---|---|
| CHK | CHANGE NO. | REV. |

| TITLE | SIZE | CODE | NUMBER | REV. |
|---|---|---|---|---|
| DRIVE LOGIC (DL8) | D | CS | 5414025-Ø-1 | L1 |
| SCALE — / — | SHEET 8 OF 8 | DIST. | | |

DEC FORM NO. DRD 137