FIELD MAINTENANCE PRINT SET

TABLE OF CONTENTS

B-TC-RL02-AK-1	TABLE OF CONTENTS
E-UA-RL02-AK-0	DISK DRIVE MOUNTING KIT AND CARTRIDGE
MP00533 (COMPLETE)	FIELD MAINTENANCE PRINT SET
E-AD-7013688-0-0	INTERLOCK KIT (MARK III)

UNIT VARIATIONS COVERED BY THIS PRINT SET

RL02-AK

Field Maintenance Print Set

Digital Equipment Corporation

PRINT SET ORDER NO.
MP 00698

222

REVISIONS			
REV	A		B
CHG. NO.	RL02-CZ001 B. MILLER		RL02-CX007 K. GUENZEL
DATE	9 JUN 79		28 NOV 79

USED ON OPTION/MODEL	
RL02-AK	
SHEET 1 OF 1	

DRN.		DATE	21-SEP-78
CHK'D		DATE	9 MAY 79
PROJ. ENG.		DATE	9 MAY 79
FIELD SERV.		DATE	15 MAY 79

digital

TITLE: DISK DRIVE MOUNTING KIT AND CARTRIDGE

SIZE	CODE	NUMBER	REV.
B	TC	RL02-AK-1	B

DIST.

DRB 124

HOLE LOCATIONS FOR MOUNTING IN H950 AND H967 CABINETS

AVAILABLE SPACE BENEATH RLØ2	MOUNTING HOLES (FROM DATUM HOLE)	
	LOWER	UPPER
5.25	12	15
10.50	21	24
15.75	30	33
21.00	39	42
26.25	48	51
31.50	57	60

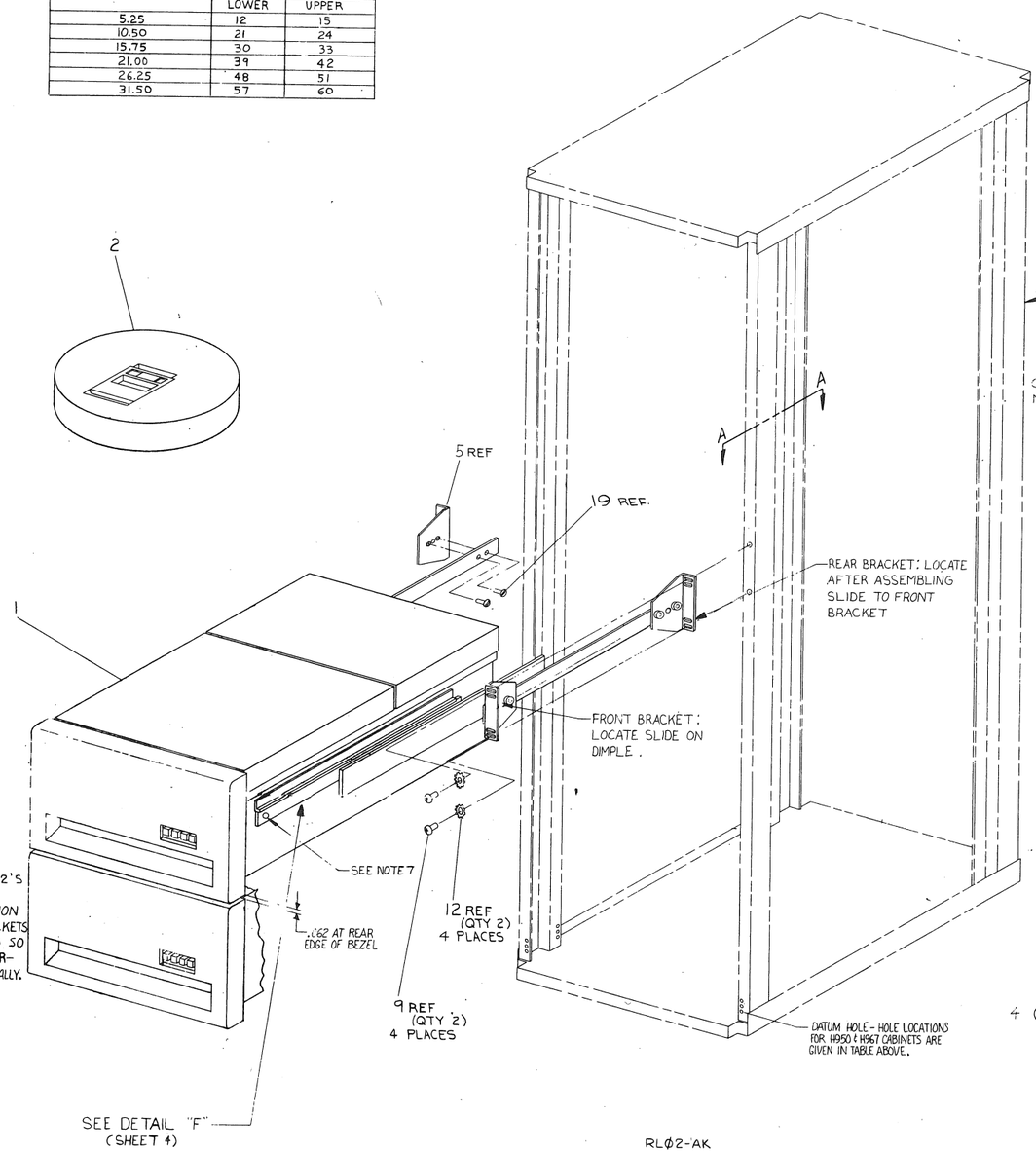

RLØ2-AK
(SHOWN IN A H95Ø CAB.)

7.CONT
D. SECURE DRIVE TO SLIDES USING SCREWS SUPPLIED. (SEE DETAIL "F", SHEET 4)
TO REMOVE DRIVE, EXTEND SLIDES FULLY, REMOVE SCREWS, RELEASE LATCHES AND LIFT OFF.

8. FOR THE LAST DRIVE IN A SYSTEM, I/O CABLE PLUGS INTO EITHER SOCKET. TERMINATOR (SUPPLIED WITH CONTROLLER) PLUGS INTO THE OTHER.

NOTES CONT. ON SH. 2

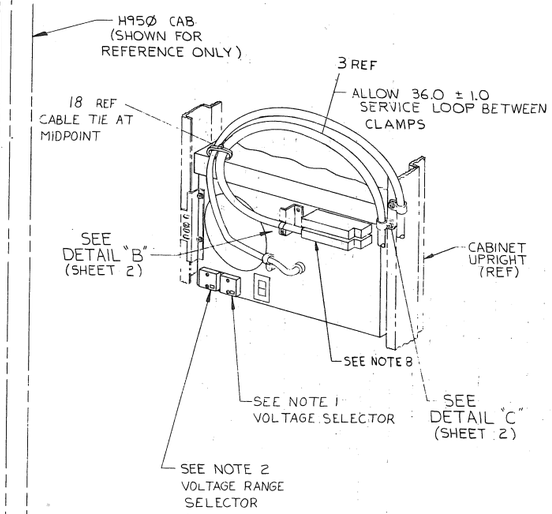

REAR VIEW OF RLØ2-AK DISK DRIVE (ITEM 1) TYPICAL FOR ALL CABS
NOTE 11

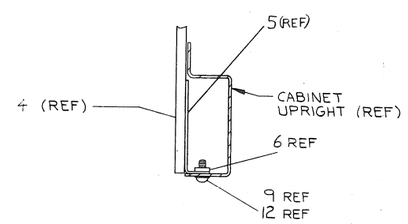

SECTION A-A
(SHOWING TYPICAL MOUNTING OF CHASSIS SLIDES TO CABINET UPRIGHTS)
SCALE: NONE

NOTES:

1. MACHINES ARE SHIPPED CONFIGURED FOR 110 V, AND NOMINAL VOLTAGE RANGE. FOR 220 V OPERATION REMOVE TWO SCREWS FROM "VOLTAGE SELECTOR" COVER WITHDRAW THE COVER, AND REINSERT TURNED UPSIDE DOWN. AFTER INSERTION, 220 MUST BE SHOWING THRU THE SMALL WINDOW. REPLACE THE TWO SCREWS, CUT OFF 110V PLUG ON THE POWER CORD, REPLACE BY 220 V PLUG (ITEM #20). FOR COLOR CODE SEE DETAIL "G", SHEET 4.
2. "LOW LINE" AND "NOMINAL LINE" ARE DEFINED ON COVER OF "VOLTAGE RANGE SELECTOR" FOR LOW LINE VOLTAGE OPERATION REMOVE TWO SCREWS FROM "VOLTAGE RANGE SELECTOR" COVER, WITHDRAW THE COVER AND RE-INSERT IT TURNED UPSIDE DOWN. AFTER INSERTION, "LOW" MUST BE SHOWING THRU THE SMALL WINDOW. REPLACE THE TWO SCREWS.
3. WHEN AN RLØ2-AK IS ORDERED IN CONJUNCTION WITH H9500, H9501, H9502, H9503, H9600, H9601, H9602, H9603 INTERLOCK KIT(S) (REF 21) OR CABLE RESTRAINT SYSTEM(S) (REF 22) MUST BE ORDERED AND INSTALLED.
4. WHEN AN RLØ2-AK IS ORDERED IN CONJUNCTION WITH A H95Ø3/H96Ø3 THE TRIM PIECES (H9514-B) MUST BE ORDERED.
5. WHEN AN RLØ2-AK IS ORDERED IN CONJUNCTION WITH A H95Ø1/H96Ø1 TRIM PIECES (H9514-A) MUST BE ORDERED.
6. TO ATTACH SHIPPING BRACKET (ITEM 7) REMOVE TWO SCREWS AND TWO LOCKWASHERS FROM ONE SIDE OF THE POWER PANEL ON THE REAR OF DISK DRIVE (ITEM 1), POSITION A SHIPPING BRACKET TO DETERMINE LOCATION OF "U" NUT (ITEM 13) AND ATTACH BRACKET USING ORIGINAL SCREWS AND LOCKWASHERS AND ITEMS 12 AND 9 (AS SHOWN IN DETAIL "D") BRACKET MAY BE ATTACHED TO EITHER SIDE OF UNIT.
7. TO MOUNT RLØ2 IN CABINET:
   A. MOUNT BRACKETS AND SLIDES TO UPRIGHTS.
   B. EXTEND SLIDES AS FAR AS POSSIBLE BY RELEASING CATCHES. (SEE DETAIL "F" SHT 4)
   C. PLACE DRIVE ON SLIDES AND PUSH BACK UNTIL ENDS OF RAILS FIT UNDER TAB ON SLIDES AND LATCHES ENGAGE.

CAUTION: OFF SHEET PARTS LIST EXISTS.
SEE K-PL-RLO2-AK-DBP (Z0848).

REV.	CODE	REVISIONS	
*			
A	A.A.	RELEASE TO ECO CONTROL AT REV A, PER PROP RLØ2-047	RLØ2-C2001 B. MILLER
B		RLO2-C4003 B. MILLER	
C		RLØ3-C4007 K. GUENZEL	

DESCRIPTION	DWG./PART NO.	ITEM NO.
UNLESS OTHERWISE SPECIFIED DIMENSIONS ARE IN INCHES		

ANGLES ±0° 30'	CLASS OF ACCURACY (CHECK ONE)	NOMINAL DIMENSION RANGE INCHES					
SURFACE QUALITY IN MICROINCHES		OVER 0 TO 0.3	OVER 0.3 TO 1.2	OVER 1.2 TO 4.0	OVER 4.0 TO 12.0	OVER 12.0 TO 40.0	OVER 40.0 TO 80.0
	MEDIUM ☐	±.004	±.008	±.012	±.016	±.024	±.04
	PREFERRED ☐	±.012	±.016	±.025	±.04	±.063	±0.1

QUANTITY & VARIATION

THIRD ANGLE PROJECTION

REMOVE BURRS AND BREAK SHARP CORNERS

DO NOT SCALE DWG

MATERIAL SEE PARTS LIST

FINISH

DRN. 3-MAR-79
CHK'D 6 May 79
ENG.
PROJ. ENG. 9-DEC-78
PROD. 5-3-79

FIRST USED ON RLØ2

digital

TITLE DISK DRIVE MTG. KIT & CARTRIDGE

NEXT HIGHER ASSY. B-DD-RLØ2-AK

SCALE NONE

SHEET 1 OF 4

SIZE B | CODE UA | NUMBER RLØ2-AK-Ø | REV. C

DIST.

SIZE B | CODE UA | RLØ2-AK-Ø | REV. C

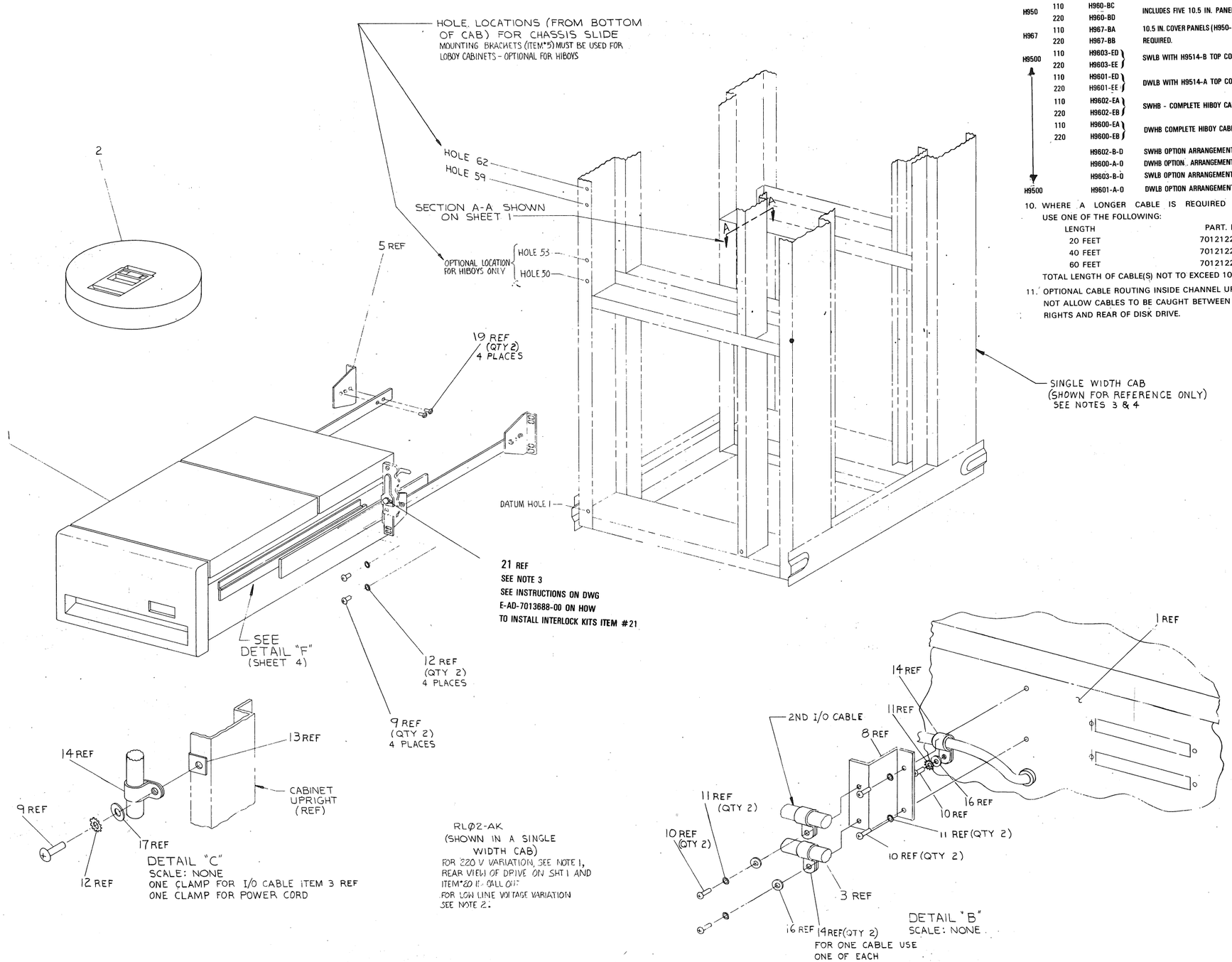

NOTES: (CONT.)

9. CABINET OPTIONS INCLUDE SKINS, DOORS, COVERS, TRIM, & PWR CONTROLLERS.

TYPE	VOLTAGE	DWG	REMARKS
H950	110	H960-BC	INCLUDES FIVE 10.5 IN. PANELS
	220	H960-BD	
H967	110	H967-BA	10.5 IN. COVER PANELS (H950-QA) MUST BE ORDERED IF REQUIRED.
	220	H967-BB	
H9500	110	H9603-ED	SWLB WITH H9514-B TOP COVERS.
	220	H9603-EE	
	110	H9601-ED	DWLB WITH H9514-A TOP COVERS.
	220	H9601-EE	
	110	H9602-EA	SWHB - COMPLETE HIBOY CABINET
	220	H9602-EB	
	110	H9600-EA	DWHB COMPLETE HIBOY CABINET
	220	H9600-EB	
		H9602-B-D	SWHB OPTION ARRANGEMENT DWG. ORDER AS REQ'D
		H9600-A-D	DWHB OPTION ARRANGEMENT DWG. ORDER AS REQ'D
		H9603-B-D	SWLB OPTION ARRANGEMENT DWG. ORDER AS REQ'D
H9500		H9601-A-D	DWLB OPTION ARRANGEMENT DWG. ORDER AS REQ'D

10. WHERE A LONGER CABLE IS REQUIRED THAN ITEM #3 USE ONE OF THE FOLLOWING:

LENGTH	PART. NO.
20 FEET	7012122-20
40 FEET	7012122-40
60 FEET	7012122-60

TOTAL LENGTH OF CABLE(S) NOT TO EXCEED 100 FEET

11. OPTIONAL CABLE ROUTING INSIDE CHANNEL UPRIGHTS. DO NOT ALLOW CABLES TO BE CAUGHT BETWEEN CABINET UPRIGHTS AND REAR OF DISK DRIVE.

REVISIONS		
CHK	CHANGE NO.	REV.

TITLE DISK DRIVE MTG KIT & CARTRIDGE	SIZE E	CODE UA	NUMBER RLØ2-AK-Ø REV. C
SCALE NONE	SHEET 2 OF 4	DIST.	

DEC FORM NO. DRE 108

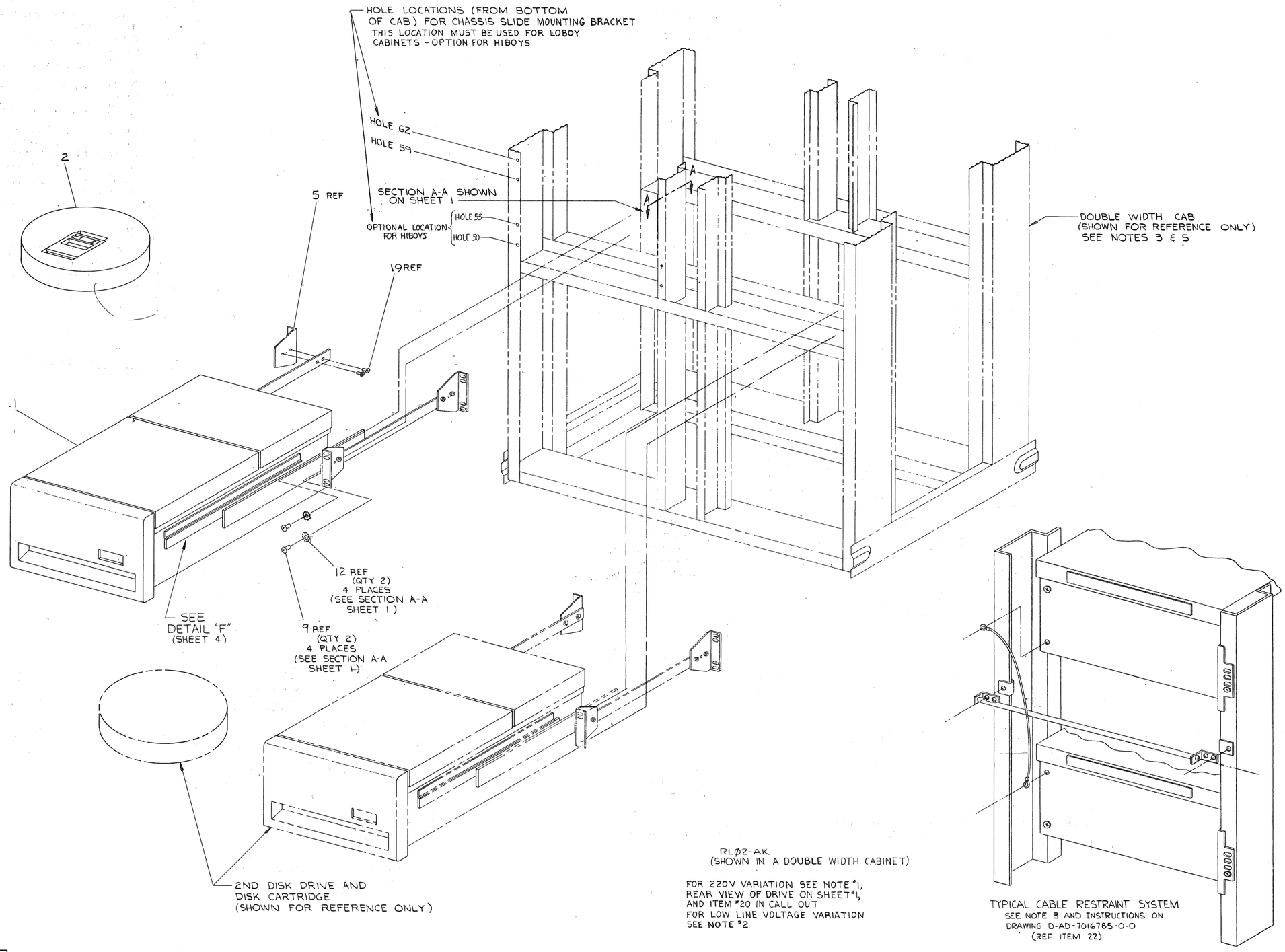

REVISIONS		
CHK	CHANGE NO.	REV.

TITLE	SIZE	CODE	NUMBER	REV.
DISK DRIVE MTG KIT & CARTRIDGE	E	UA	RLØ2-AK-Ø	C
SCALE NONE	SHEET 3 OF 4		DIST.	

DEC FORM NO. DNE 168

RI Ø2-AK-Ø

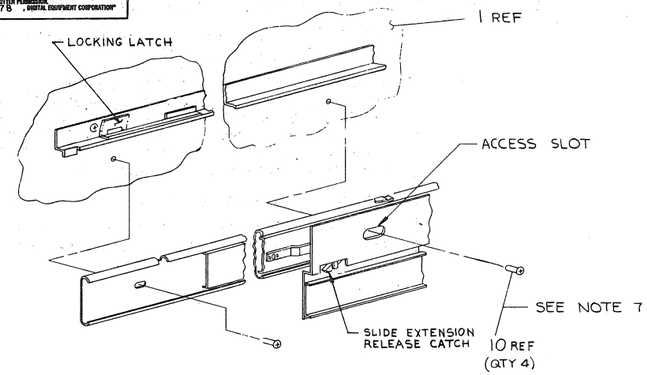

DETAIL 'F'
SEE NOTE 7

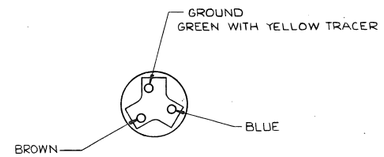

DETAIL G
REAR VIEW OF ITEM 20
WITH STRAIN RELIEF REMOVED

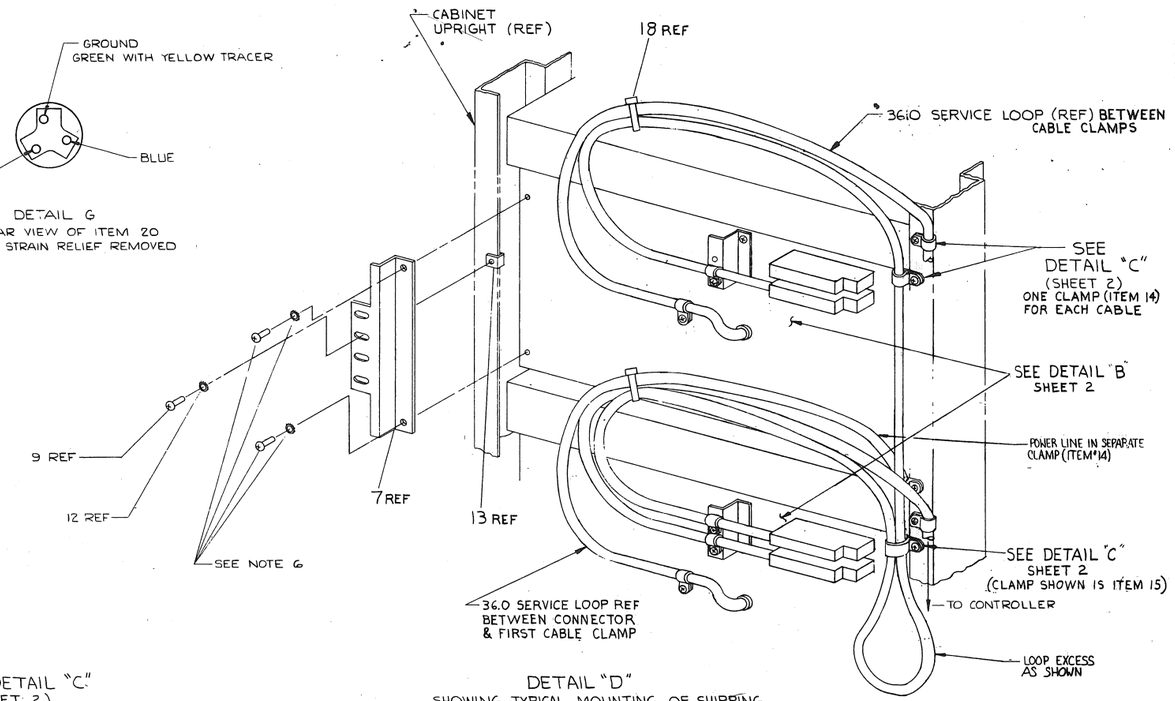

DETAIL "D"
SHOWING TYPICAL MOUNTING OF SHIPPING BRKT (ITEM 7) AND CABLE ROUTING FOR DUAL DRIVE SYSTEM (CPU BELOW) IN AN H950 CABINET
NOTE 11

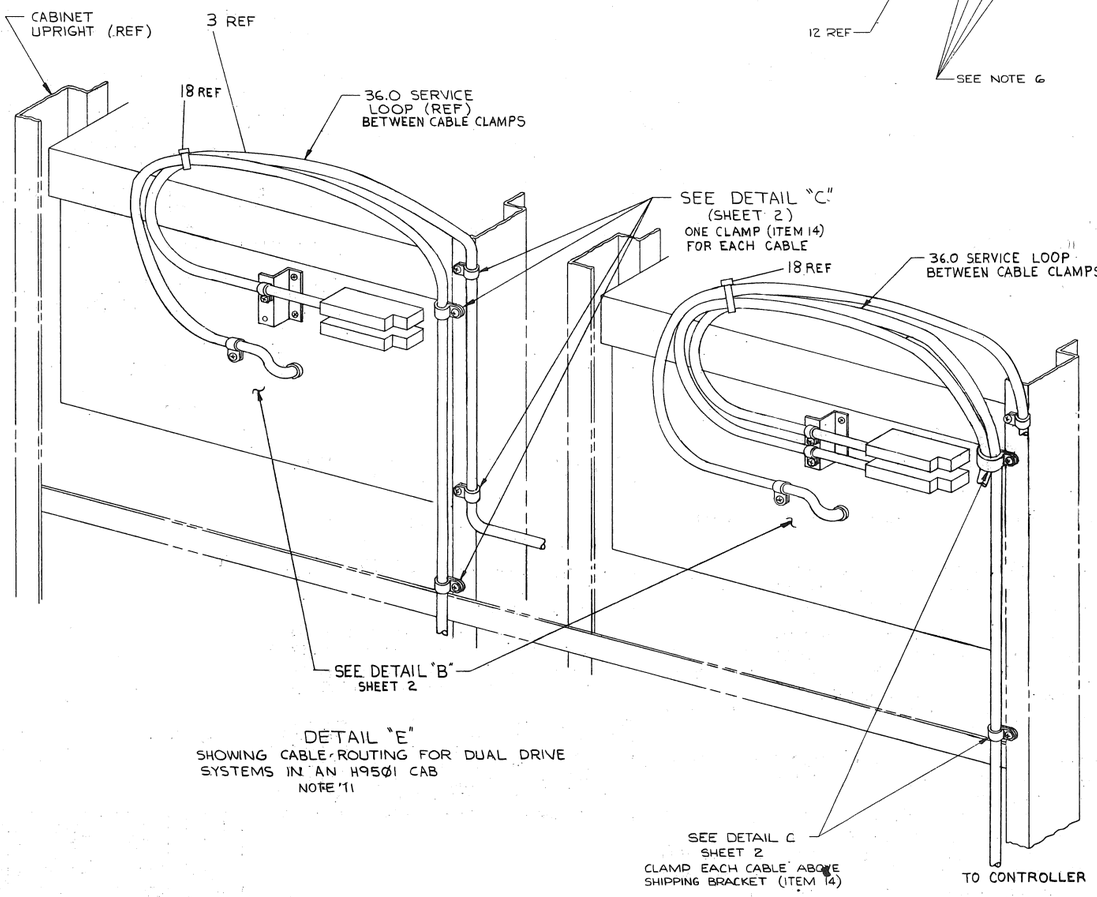

DETAIL "E"
SHOWING CABLE ROUTING FOR DUAL DRIVE SYSTEMS IN AN H9501 CAB
NOTE 11

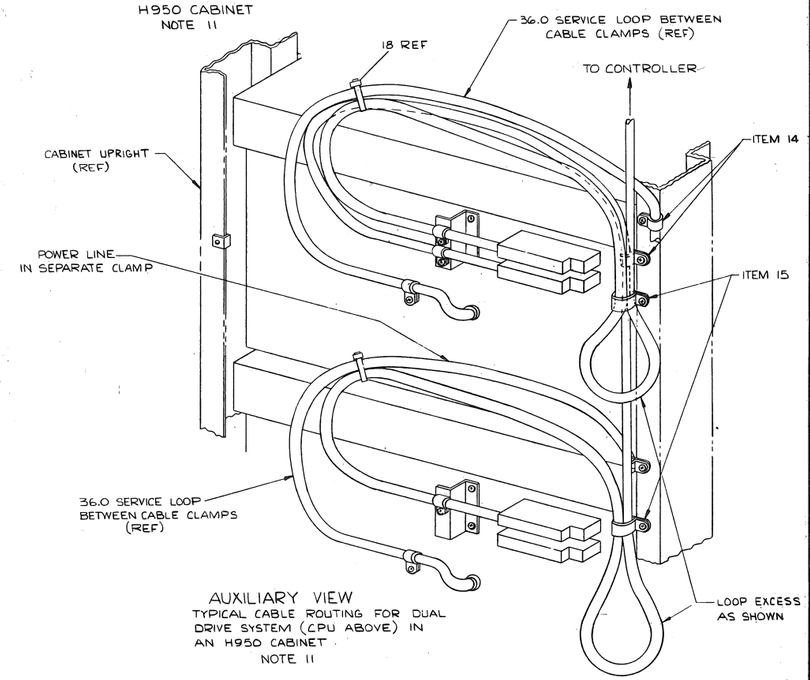

AUXILIARY VIEW
TYPICAL CABLE ROUTING FOR DUAL DRIVE SYSTEM (CPU ABOVE) IN AN H950 CABINET
NOTE 11

REVISIONS		
CHK	CHANGE NO.	REV.

TITLE	SIZE	CODE	NUMBER	REV.
DISK DRIVE MTG KIT & CARTRIDGE	E	UA	RL02-AK-0	C
SCALE NONE	SHEET 4 OF 4		DIST.	

DEC FORM NO. DRE 102

LEGEND	
PART NO.	VARIATION
7013688-0	LEFT HAND
7013688-1	RIGHT HAND

NOTE:

1. USE ITEM #15 (SHOULDER, WASHER) IN PLACE OF ITEM #12 (FLAT WASHER) WHEN ITEM #1 (RETAINER INTERLOCK) IS NOT MOUNTED THROUGH A SLIDE MOUNTING HOLE.
2. ASSEMBLE ITEM #9 (SPRING, WASHER) WITH CONVEX SIDE TOWARD ITEM #3, 4 (PLATE, CAM).
3. CABINET EQUIPMENT MOUNTING HOLES ARE NUMBERED CONSECUTIVELY FROM THE BOTTOM UP. A SQUARE HOLE IS PROVIDED EVERY FIFTH MOUNTING HOLE TO AID IN COUNTING. WITH STABILIZER ARM PUSHED IN, THE INTERLOCK ROD HOLE PATTERN LINES UP WITH THE VERTICAL MOUNTING HOLES AND IS NUMBERED THE SAME.
4. ITEM #14 MUST ALWAYS BE USED ADJACENT TO ITEM #1.
5. WHEN INSTALLING CABINET TRIM STRIPS, MAKE SURE THEY DON'T INTERFERE WITH INTERLOCK OPERATION.

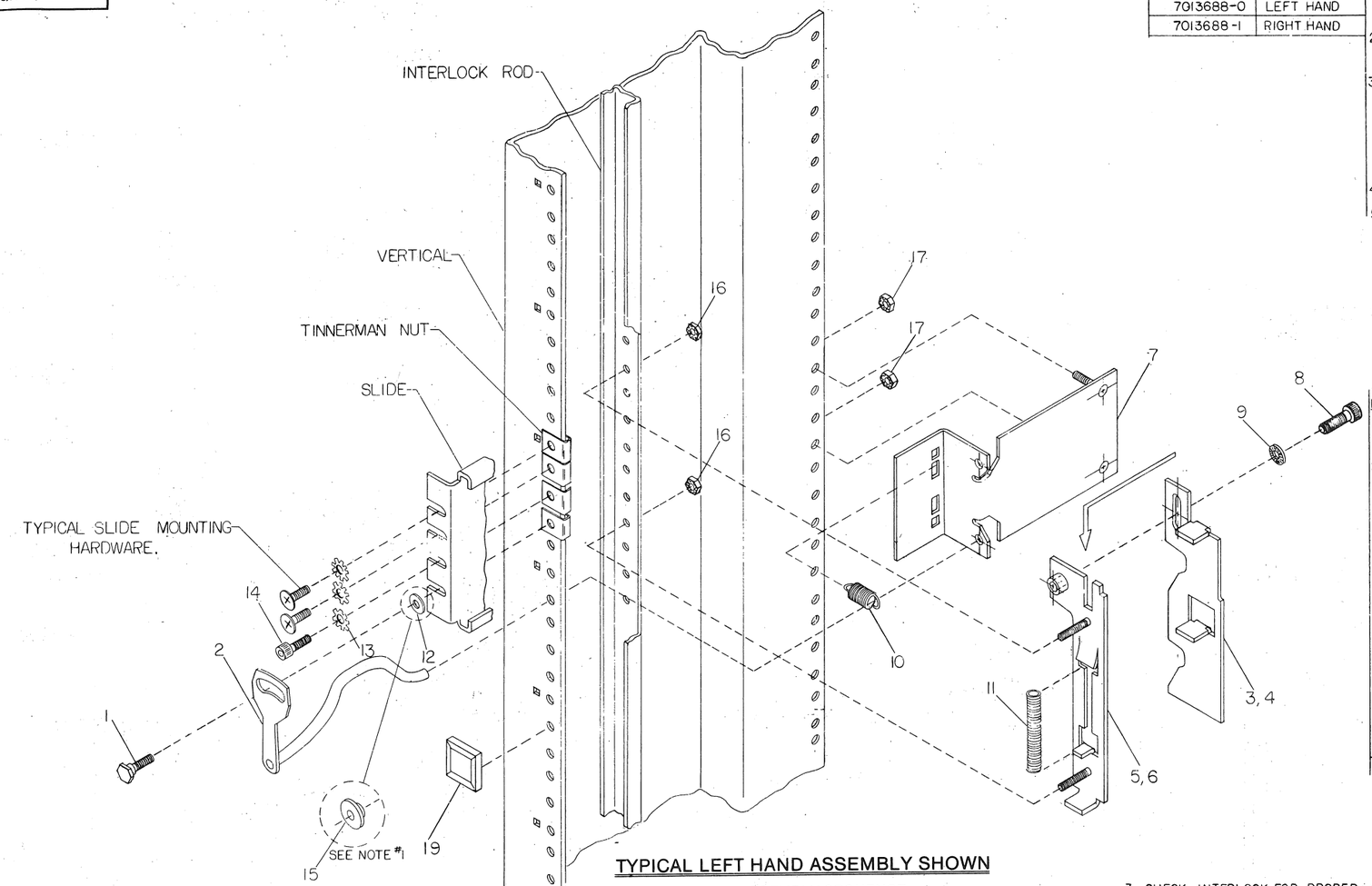

TYPICAL LEFT HAND ASSEMBLY SHOWN

RECOMMENDED ASSEMBLY SEQUENCE

1. PUSH STABILIZER ARM IN.
2. ASSEMBLE ITEM #5, 6 AND 11 ONTO INTERLOCK ROD USING ITEMS #16.
3. ASSEMBLE ITEM #3, 4 ONTO ITEM #5, 6 USING ITEMS #8 AND #9. TIGHTEN ITEM #8 ONLY AFTER DEPRESSING ITEM #3, 4 AGAINST SPRING AS FAR AS POSSIBLE.
4. HOOK ITEM #10 INTO ITEM #7. USE UPPER SLOT FOR "U" ASSEMBLIES AND LOWER SLOT. FOR "D" ASSEMBLIES. INSTALL ITEM #7 ONTO CABINET VERTICAL USING ITEMS #17, TORQUE TO 100±30 INCH POUNDS.
5. INSTALL ITEM #2 REMEMBERING TO PASS THROUGH ITEM #10 BEFORE ENGAGING ITEM #7.
6. AT THIS POINT IN THE ASSEMBLY, PROCEDURES FOR NORMAL ASSEMBLY AND SPECIAL ASSEMBLY DIFFER.
   A. NORMAL ASSEMBLY
      1. MOUNT SLIDE USING ITEMS #1, #12, #13, #14 AND TYPICAL SLIDE MOUNTING HARDWARE.
      2. ADJUST INTERLOCK BY LOOSENING ITEM #8, ALLOWING ITEM #3, 4 TO ASSUME ITS PROPER POSITION AND RETIGHTEN ITEM #8 TO 70±30 INCH-POUNDS.
      3. CHECK INTERLOCK FOR PROPER OPERATION BY SLIDING THE STABILIZER ARM IN AND OUT.
   B. SPECIAL ASSEMBLY
      1. INSTALL ITEM #1 AND #15 WITHOUT SLIDE.
      2. ADJUST INTERLOCK BY LOOSENING ITEM #8 ALLOWING ITEM #3, 4 TO ASSUME ITS PROPER POSITION AND RETIGHTEN ITEM #8 TO 70±30 INCH-POUNDS.
      3. REMOVE ITEM #1, #15.
      4. MOUNT SLIDE USING ITEMS #1 #12 #13 #14 AND TYPICAL SLIDE MOUNTING HARDWARE.
      5. CHECK INTERLOCK FOR PROPER OPERATION BY SLIDING THE STABILIZER ARM IN AND OUT.
7. BOTH SPECIAL AND NORMAL ASSEMBLIES — INSTALL ITEMS #19, ONE ON EACH VERTICAL MOUNTING RAIL (BOTH SIDES OF EQUIPMENT), IN THE PLACES WHERE THE REARMOST PART OF THE BEZEL WOULD NORMALLY STRIKE. ITEMS #19 MUST NOT INTERFERE WITH ITEM #2 (ASSEMBLY, CHURCHKEY) OR TRIM STRIPS.

INSTRUCTIONS

1. THE SYSTEM DOCUMENTATION WILL SPECIFY THE INTERLOCK LOCATION AND ASSEMBLY BY LETTER AND NUMBER CODE.

2A. THE FIRST LETTER OF THE CODE SPECIFIES THE DIRECTION IN WHICH THE CHURCH KEY ASSEMBLY MUST BE INSTALLED. "U" SPECIFIES UP (AS SHOWN ON PRINT) AND "D" SPECIFIES DOWN.

B. THE SECOND LETTER (IF ANY) SPECIFIES WHICH OF THE TWO CAM PLATE NOTCHES ENGAGES WITH THE CHURCHKEY ASSEMBLY. IF NO LETTER APPEARS, WE CALL THIS THE NORMAL ASSEMBLY POSITION AND USE THE LOWER NOTCH. IF THE LETTER "S" APPEARS, WE CALL THIS THE SPECIAL ASSEMBLY POSITION AND USE THE UPPER NOTCH.

C. THE NUMBER AT THE END OF THE INSTALLATION CODE SPECIFIES THE CABINET MOUNTING HOLE FOR THE ITEM #1 (INTERLOCK RETAINER). ALL OTHER PARTS OF THE ASSEMBLY ARE REFERENCED FROM THIS HOLE USING THE CHART BELOW.

DIRECTION & NOTCH SPECIFICATION	BACK PLATE: LOCATION OF TOP MOUNTING STUD.	OUTRIGGER: LOCATION OF TOP MOUNTING STUD.
U	X + 4	X
US	X	X
D	X + 6	X + 3
DS	X + 2	X + 3

NOTE: 'X' IS THE SPECIFIED INTERLOCK RETAINER LOCATION.

CAUTION: OFF PRINT PARTS LIST A-PL-7013688-0-0

DRN. R. OLSON	2-12-76	FINISHED BY H5500-A	
CHK'D	2-16-76	TITLE INTERLOCK KIT (MARK III)	
ENG	2-16-76		
PROJ. ENG			
PROD.	2-26-76		
NEXT HIGHER ASSY.			
A-PL-7013688-0-0		SIZE E	CODE AD
SCALE NONE		NUMBER 7013688-0-0	REV.
SHEET 1 OF 1		DIST.	

THIRD ANGLE PROJECTION

REMOVE BURRS AND BREAK SHARP CORNERS

DO NOT SCALE DWG

MATERIAL SEE PARTS LIST

FINISH NONE

DESCRIPTION — UNLESS OTHERWISE SPECIFIED DIMENSIONS ARE IN INCHES

DWG./PART NO. — ITEM NO.

ANGLES ±0° 30'

SURFACE QUALITY IN MICROINCHES

CLASS OF ACCURACY (CHECK ONE)

	OVER 0 TO 0.3	OVER 0.3 TO 1.5	OVER 1.5 TO 6.0	OVER 6.0 TO 30.0	OVER 30.0 TO 80.0
MEDIUM	±.005	±.008	±.012	±.015	±.020	±.04
PREFERRED	±.002	±.005	±.008	±.01	±.02	±0.1

QUANTITY & VARIATION

REVISIONS — REV. — CHANGE NO. — OK

DEC FORM NO. DRE 100-0

FIELD MAINTENANCE PRINT SET

TABLE OF CONTENTS

Field Maintenance Print Set	B-TC-RL02-0-1
RL02 Disk Drive Assembly	E-UA-RL02-0-0 (Sheets 1,2 & 3 Only)
RL02 System Cabling	D-IC-RL02-0-3 (Sheet 2 Only)
Power Panel Assembly	D-AD-7012130-0-0
Read/Write Board	D-UA-5413536-0-0 (Sheet 1 Only) B-PL-5413536-0-0 D-CS-5413536-0-1
Front Panel	D-UA-5411846-0-0 (Sheet 1 Only) B-PL-5411846-0-0 D-CS-5411846-0-1
AC Servo	D-UA-5411848-0-0 (Sheet 1 Only) B-PL-5411848-0-0 D-CS-5411848-0-1
DC Servo and Power Board	D-UA-5413534-0-0 (Sheet 1 Only) B-PL-5413534-0-0 D-CS-5413534-0-1
Drive Logic	D-UA-5414025-0-0 (Sheet 1 Only) A-PL-5414025-0-0 D-CS-5414025-0-1
RL02 Disk Drive Assembly	K-PL-RL02-0-DBP
Power Panel Assembly	K-PL-7012130-0-DBP

UNIT VARIATIONS COVERED BY THIS PRINT SET

RLØ2

Field Maintenance Print Set

Digital Equipment Corporation

PRINT SET NO.
MPØØ553

REVISIONS			
REV	A	B	
CHG. NO.	RL02-CX0005 B. MILLER	RL02-CX0007 K. GUENZEL	
DATE	RPM 23-AUG-79	RPM 28 NOV 79	

USED ON OPTION/MODEL
RL02

SHEET 1 OF 1

DRN. R. Richard	DATE 22 Sep 78	TITLE: RL02 DISK DRIVE	digital
CHK'D W. Main	DATE 6 JUN 79		
PROJ. ENG.	DATE 6-6-79		
FIELD SERV.	DATE 6 JUN 79		

SIZE	CODE	NUMBER	REV.
B	TC	RL02-0-1	B

DIST.

DRB 124

NOTES

1. LOWER HEAD (ITEM 65) SHALL BE POSITIONED REAR' ARDS AGAINST PIN IN CARRIAGE
2. ALL SCREWS TO BE TIGHTENED AS FOLLOWS:

4-40	SCREW,	TORQUE	3.5 ± 0.5	IN LBS
6-32	"	"	5.0 ± 1.0	"
8-32	"	"	10.0 ± 1.0	"
10-32	"	"	18.0 ± 2.0	"

3. DRIVE BELT TENSION 10.0 ± 1.0 LBS.
4. 4-40 HEAD MOUNTING BOLTS TO BE TIGHTENED TO 5±.5 IN. LBS.
5. TORQUE 8-32 SELF TAPPING HARDWARE (ITEM 69) TO 16-18 IN LBS.
6. BLOWER HOUSING SECURING HARDWARE TO BE REMOVED BEFORE OPERATING UNIT.

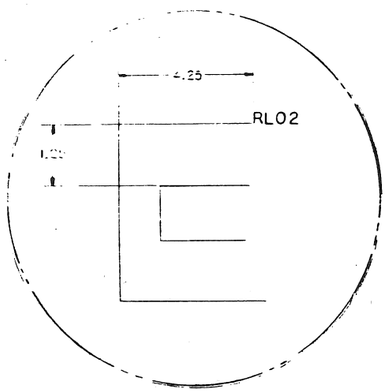

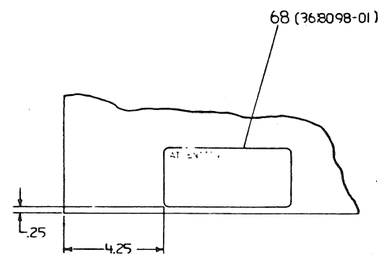

VIEW B-B

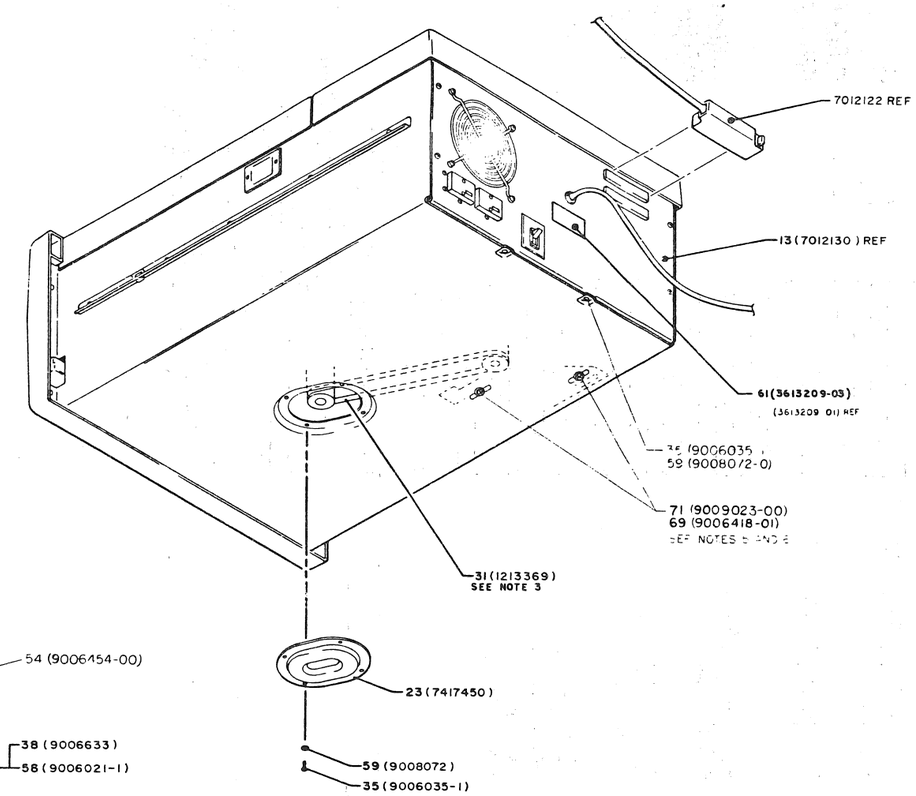

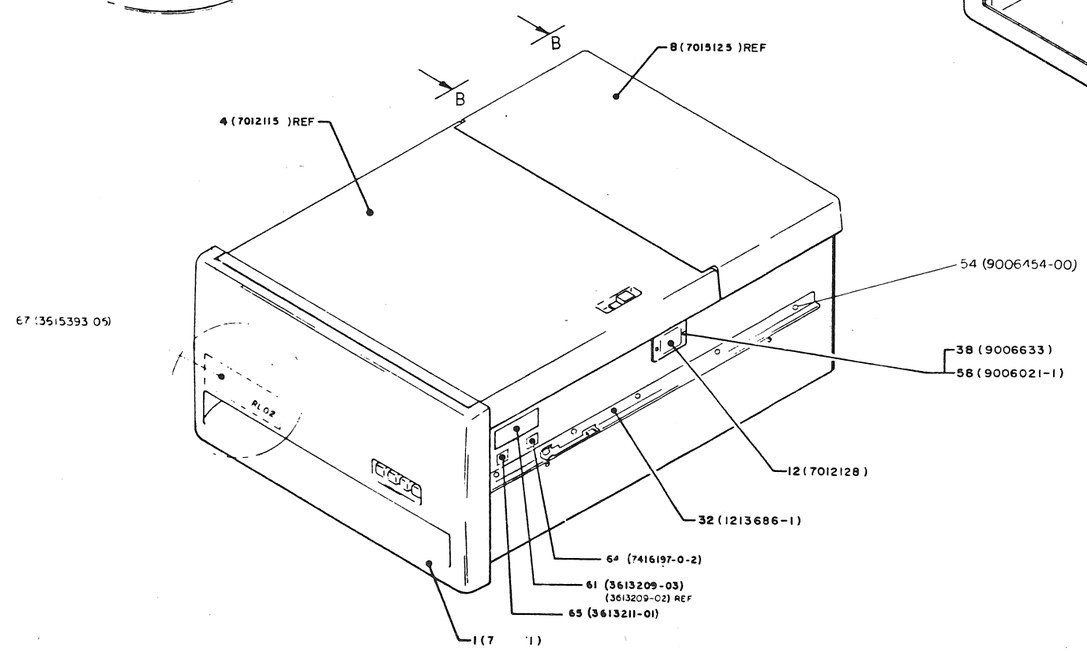

CAUTION

OFF-SHEET PARTS LIST EXISTS.
SEE K-PL-RL02-0-DBP (20485).

REVISIONS			
SYM	DESCRIPTION		REV
D	RL02-C6808 N. ZARICH		
I	RL02-C6809 K. GUENZEL		
C	RL02-C6808 K. GUENZEL		
H	RL02-C6808 N. ZARICH		
J	RL02-C6808 DAL 9 SEPT 80 K. GUENZEL		
K	RL02-C6803 K. GUENZEL		

QUANTITY & VARIATION	DESCRIPTION	DWG. PART NO	ITEM NO
	UNLESS OTHERWISE SPECIFIED DIMENSIONS ARE IN INCHES		
	SURFACE QUALITY		
	MICROINCHES		
THIRD ANGLE PROJECTION	DRAWN		
REMOVE BURRS AND BREAK SHARP CORNERS			
MATERIAL SEE PARTS LIST	SCALE		
FINISH	SHEET 1 OF 4		

TITLE RL02 DISK DRIVE ASSEMBLY

SIZE E | CODE UA | NUMBER RL02-0-0 | REV K

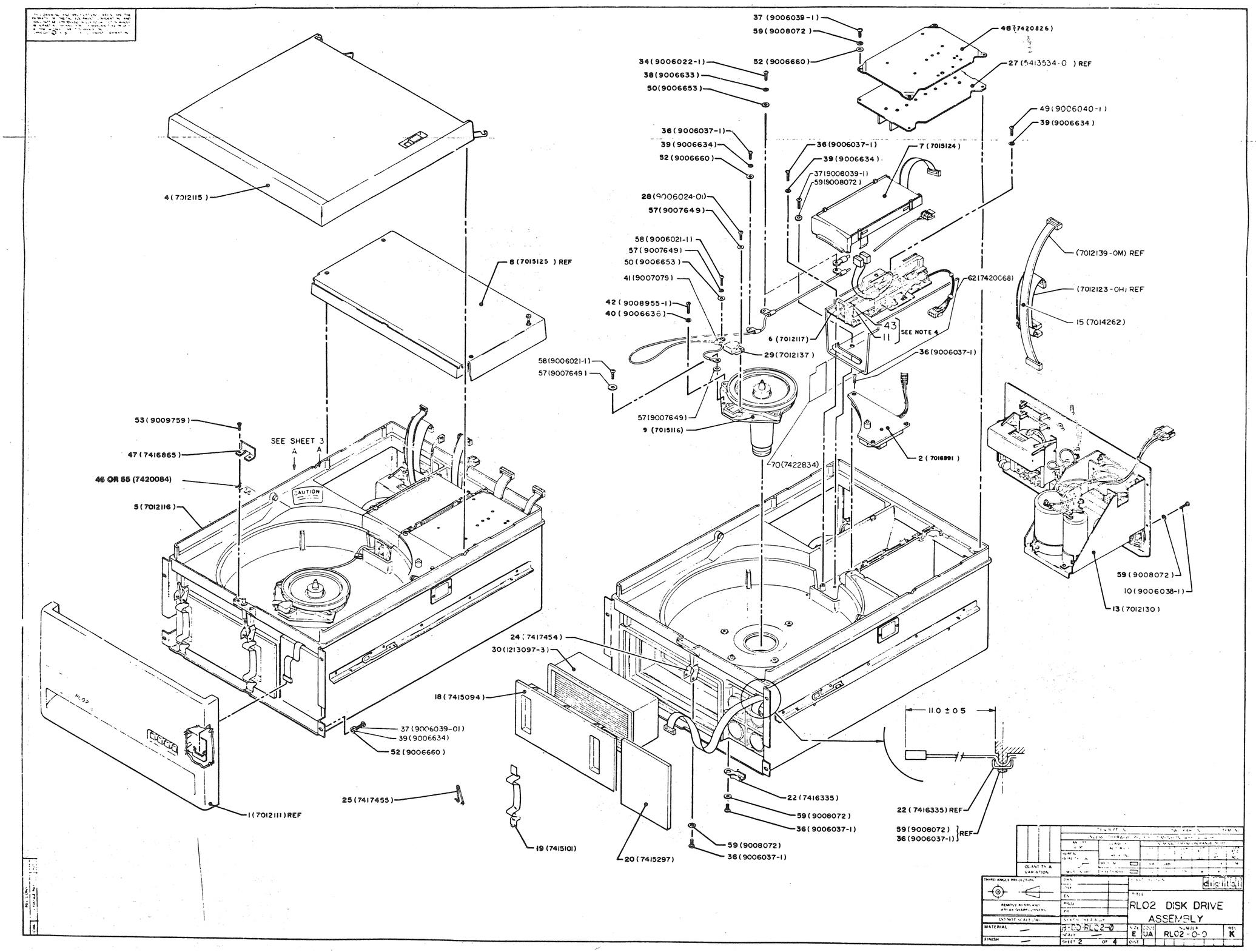
37 (9006039-1)
59 (9008072)
48 (7420826)
34 (9006022-1)
52 (9006660)
27 (5413534-0) REF
38 (9006633)
50 (9006653)
49 (9006040-1)
39 (9006634)
36 (9006037-1)
39 (9006634)
52 (9006660)
36 (9006037-1)
39 (9006634)
7 (7015124)
37 (9006039-1)
59 (9008072)
4 (7012115)
28 (9006024-01)
57 (9007649)
58 (9006021-1)
57 (9007649)
50 (9006653)
41 (9007079)
(7012139-0M) REF
62 (7420068)
(7012123-0H) REF
8 (7015125) REF
42 (9008955-1)
40 (9006636)
43
11
SEE NOTE 4
15 (7014262)
6 (7012117)
29 (7012137)
36 (9006037-1)
58 (9006021-1)
57 (9007649)
57 (9007649)
9 (7015116)
53 (9009759)
SEE SHEET 3
A
A
47 (7416865)
46 OR 55 (7420084)
CAUTION
5 (7012116)
70 (7422834)
2 (7016991)
59 (9008072)
10 (9006038-1)
13 (7012130)
24 (7417454)
30 (1213097-3)
18 (7415094)
37 (9006039-01)
39 (9006634)
52 (9006660)
110 ± 0.5
25 (7417455)
1 (7012111) REF
22 (7416335)
59 (9008072)
36 (9006037-1)
22 (7416335) REF
59 (9008072)
36 (9006037-1)
REF
19 (7415101)
20 (7415297)
59 (9008072)
36 (9006037-1)
QUANTITY & VARIATION
THIRD ANGLE PROJECTION
REMOVE BURRS AND BREAK SHARP CORNERS
UNLESS OTHERWISE SPECIFIED
MATERIAL —
FINISH —
DRAWN
CHK'D
ENG
PROJ
PC
SYSTEM HARDWARE
D-BD-RL02-0
SCALE —
SHEET 2 OF 4
digital
TITLE
RL02 DISK DRIVE ASSEMBLY
SIZE E
CODE UA
NUMBER RL02-0-0
REV K

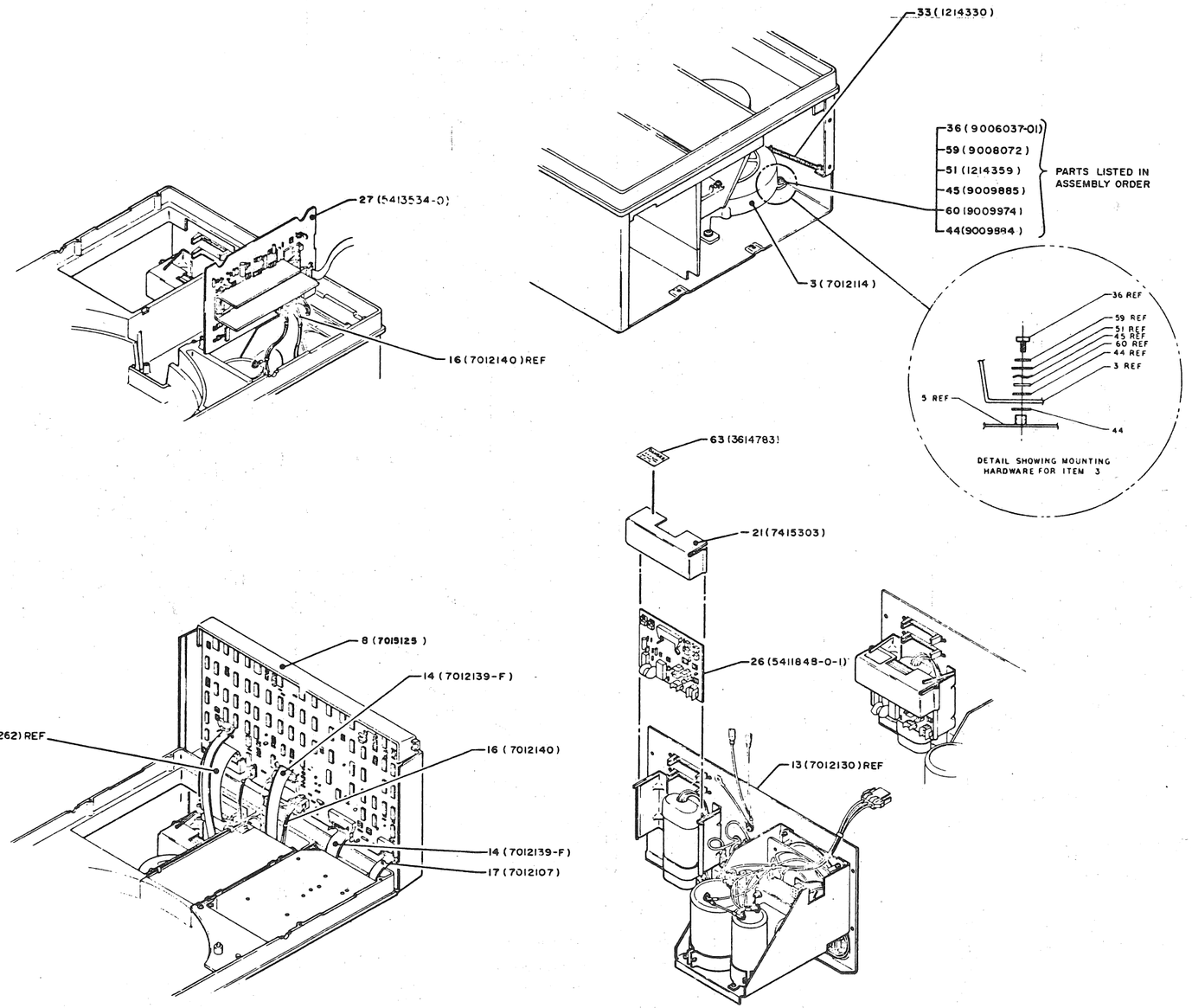

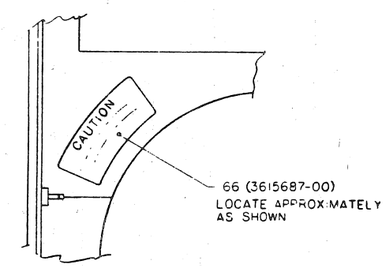

VIEW A-A

QUANTITY & VARIATION	DESCRIPTION	DW: PART NO	ITEM NO
	UNLESS OTHERWISE SPECIFIED DIMENSIONS ARE IN INCHES		

VALUES ON 10	FINISH ACCURACY	NOMINAL DIMENSION RANGE INCHES					
SURFACE QUALITY	CHECK ONE						
	MEDIUM						
MICROINCHES	PREFERRED						

THIRD ANGLE PROJECTION

REMOVE BURRS AND BREAK SHARP CORNERS

DO NOT SCALE DWG.

MATERIAL —

FINISH —

DRN

CHK'D

ENG

PROJ ENG

PROD

NEXT HIGHER ASSY

9-DD-RL02-0

SCALE —

SHEET 3 OF 4

digital

TITLE

RL02 DISK DRIVE ASSEMBLY

SIZE	CODE	NUMBER	REV
E	UA	RL02-0-0	K

DIST

REVISION HISTORY

Cont

NOTES: (THIS SHEET ONLY)

1. DIMENSION APPLIES TO HIGHEST OR LOWEST POINT ALONG BRUSH ARM OR BLOCK OF BRUSH.
2. 3 TOOLING POINTS. SEE DRAWING 7416846 OR 7415237.
3. DIMENSION HAS TO BE WITHIN .004 AT BOTH EXTREMES OF CARRIAGE TRAVEL.

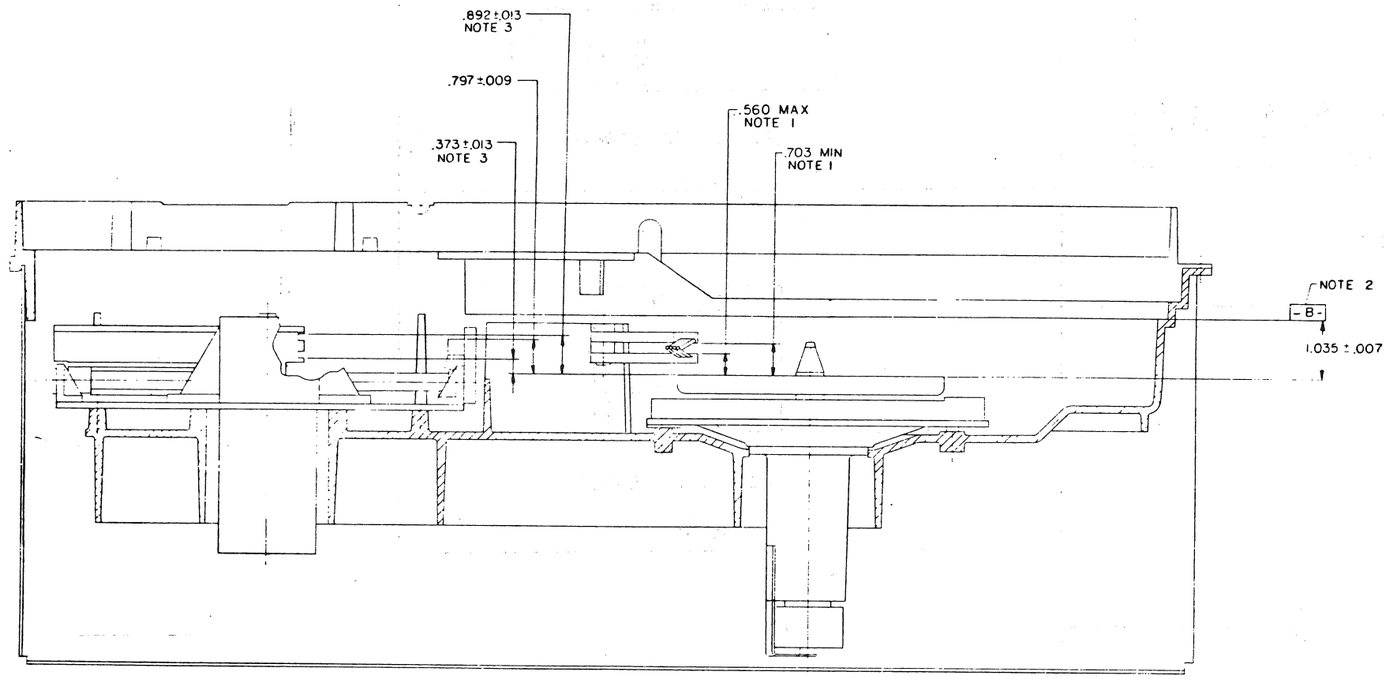

QUANTITY & VARIATION	DESCRIPTION	DWG. PART NO	ITEM NO
	UNLESS OTHERWISE SPECIFIED DIMENSIONS ARE IN INCHES		
THIRD ANGLE PROJECTION	DRN	FINISH MACHINE	
REMOVE BURRS AND BREAK SHARP CORNERS	CHK'D		
	ENG		
	PROJ ENG		
MATERIAL			
FINISH			

TITLE
RL02 DISK DRIVE ASSEMBLY

SIZE A CODE IDENT NUMBER UA R1200 REV K

SCALE 4 SHEET 4 OF 4

REVISIONS
REV | DESCRIPTION | DATE | APPR

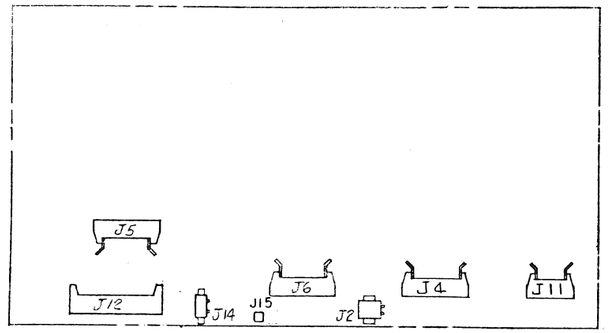

LOGIC BOARD

FIG 1

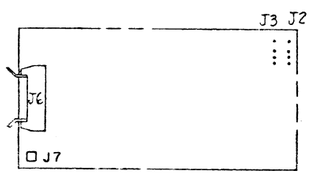

R/W BOARD

FIG 2

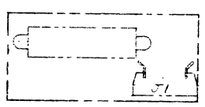

FRONT PANEL BOARD

FIG 3

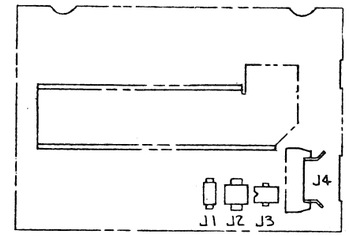

D.C. SERVO BOARD

FIG 4

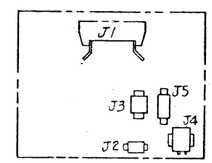

A.C. SERVO BOARD

FIG 5

REV.	DESCRIPTION	DWG./PART NO.	ITEM NO.
A	RL02-CZ001 B.MILLER		
B	RL02-CX008 K.GUENTEL K.Gutzeit		
C	RL02-CX010 M. ZARICH		

UNLESS OTHERWISE SPECIFIED DIMENSIONS ARE IN INCHES

ANGLES ±0° 30'	CLASS OF ACCURACY (CHECK ONE)	NOMINAL DIMENSION RANGE INCHES					
		OVER 0 TO 0.2	OVER 0.2 TO 1.2	OVER 1.2 TO 4.0	OVER 4.0 TO 12.0	OVER 12.0 TO 40.0	OVER 40.0 TO 80.0
SURFACE QUALITY IN ✓	MEDIUM ☐	±.004	±.008	±.012	±.016	±.024	±.04
MATERIAL OVER	PREFERRED ☐	±.012	±.016	±.025	±.04	±.063	±.1

QUANTITY & VARIATION

THIRD ANGLE PROJECTION

REMOVE BURRS AND BREAK SHARP CORNERS

DO NOT SCALE DWG

MATERIAL

FINISH

DRN. K. Mulard 25 SEP 78

CHK. W. Miller 3 MAY 79

ENG. K. Guentel 5-4-79

PROJ. ENG. B. GLOVER 5-4-79

PROD. 5-4-79

NEXT HIGHER ASSY.

B-DD-RL02-0

SCALE

SHEET OF 2

FIRST USED ON RL02

TITLE

RL02 SYSTEM CABLING

SIZE D | CODE IC | NUMBER RL02-0-3 | REV. C

DIST.

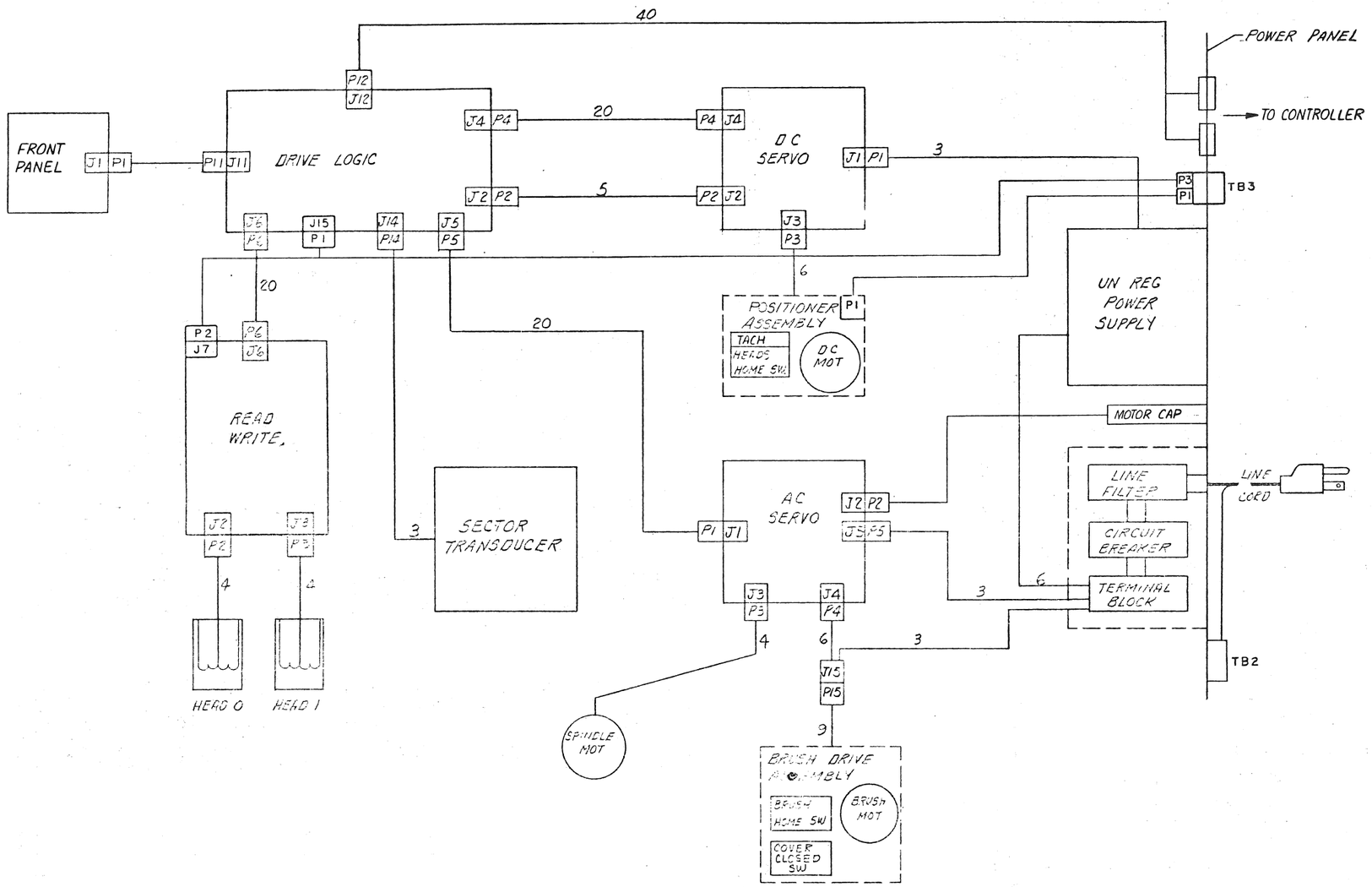

DESCRIPTION	DWG PART NO.	ITEM NO.
UNLESS OTHERWISE SPECIFIED DIMENSIONS ARE IN INCHES		

ANGLES ±0° 30'	CLASS OF ACCURACY (CHECK ONE)	NOMINAL MEASUREMENT ON PARTS IN INCHES					
SURFACE QUALITY IN MICRO INCHES		OVER 0 TO 0.3	OVER 0.3 TO 1.2	OVER 1.2 TO 4.8	OVER 4.8 TO 12.0	OVER 12.0 TO 48.0	OVER 48.0 TO 60.0
	MEDIUM	±0.04	±0.06	±0.012	±0.016	±0.024	±0.04
	PRECISION	±0.02	±0.03	±0.005	±0.006	±0.012	±0.01

QUANTITY & VARIATION

THIRD ANGLE PROJECTION

REMOVE BURRS AND BREAK SHARP CORNERS

DRAWN L. Wood 25 SEP 78
CHECKED 4 MAY 79
PROJ. ENG.
NEXT HIGHER ASSY

TITLE
RLØ2
RLØ2
SYSTEM CABLING

MATERIAL
FINISH

B-DD-RLØ2-Ø
SCALE
SHEET 1 OF 1

SIZE D | CODE TC | NUMBER RLØ2-C-3 | REV C

DIMENSIONS CLASS 1 NO
REV

AUTOMATED BY PRTLST.3J(25) — P A R T S L I S T — SHEET A1 OF A2

LINE	ITEM	DOCUMENT NUMBER	PART NUMBER	DESCRIPTION	QUANTITY PER VARIATION 00
1	1	D-AD-7012111-0-0	7012111-00	BEZEL ASSY	1
2	2	D-AD-7012112-0-0	7012112-00	BRUSH DRIVE ASSY	1
3	3	E-AD-7012114-0-0	7012114-00	DISK MOTOR ASSY	1
4	4	E-AD-7012115-0-0	7012115-00	FRONT COVER ASSY	1
5	5	E-AD-7012116-0-0	7012116-00	MAIN CHASSIS ASSY	1
6	6	D-AD-7012117-0-0	7012117-00	POSITIONER ASSY	1
7	7	D-AD-7015124-0-0	7015124-00	RL02 R/W BOX ASSY	1
8	8	D-AD-7015125-0-0	7015125-00	RL02 REAR COVER ASSY	1
9	9	D-AD-7015116-0-0	7015116-00	SPINDLE ASSY	1
10	10		9006038-01	SCREW,PAN,PHIL 8-32X 7/16 SS	4
11	11	D-IA-7015637-0-0	7015637-00	RL02 DATA HEAD "A"UP	1
12	12	B-AD-7012128-0-0	7012128-00	ACCESS COVER ASSEMBLY	1
13	13	D-AD-7012130-0-0	7012130-00	POWER PANEL ASSEMBLY	1
14	14	B-IA-7012139-0-0	7012139-0F	INTERCONNECT CABLE	2
15	15	B-IA-7014262-0-0	7014262-00	INTERCONNECT CABLE ASSEMBLY	1
16	16	C-IA-7012140-0-0	7012140-00	POWER HARNESS DC	1
17	17	B-IA-7012107-0-0	7012107-3D	INTERCONNECT CABLE	1
18	18	D-MD-7415094-0-0	7415094-00	REAR COVER	1
19	19	C-MD-7415101-0-0	7415101-00	SPRING, PLENUM COVER	2
20	20	C-MD-7415297-0-0	7415297-00	FILTER,PAD	1
21	21	C-MD-7415303-0-0	7415303-00	COVER AC SERVO	1
22	22	C-MD-7416335-0-0	7416335-00	CABLE RETAINER	1
23	23	D-MD-7417450-0-0	7417450-00	HATCH	1
24	24	C-MD-7417454-0-0	7417454-00	BRACKET PLENUM	2
25	25	C-MD-7417455-0-0	7417455-00	LATCH PLENUM	2
26	26	D-UA-5411848-0-0	5411848-00	ETCH BRD 54-11848	1
27	27	D-UA-5413534-0-0	5413534-00	DC SERVO + POWER SUPPLY (RL02)	1
28	28		9006024-01	SCREW,PAN,PHIL 6-32X 1/2 SS	2
29	29	D-AD-7012137-0-0	7012137-00	TRANEDUCER ASSY	1
30	30		1213097-00	FILTER,AIR,HEPA,33CFM	1

REVISION HISTORY			
ENG	ECO NUMBER	REV	
	RL02-CZ002	A	
BM	RL02-CX003	B	
BM	RL02-CX004	C	
KG	RL02-CX006A	D	
KG	RL02-CX008	E	
KG	RL02-CX009	F	
MZ	RL02-CX010	H	
MZ			

BASIC PART NO: ORL02
SECTION A OF A
SECTION. VARIATION INDEX
[A] 00
[B]
[C]
[D]
[E]
[F]

DRN: W.GRIMES — DATE: 15 FEB 78
CHK'D: W.MAJOR — DATE: 15 FEB 78
DES.ENG.: B.MILLER — DATE: 15-MAR-79
RESP.ENG.: B.MILLER — DATE: 15-MAR-79
MFG.ENG.: D.LICK — DATE: 15 MAR 79
ASSEMBLY NUMBER: E-UA-RL02-0-0
TOP DOCUMENT NUMBER: # B-DD-RL02-0

D I G I T A L

TITLE PARTS LIST
RL02 DISK DRIVE ASSEMBLY

SIZE	CODE	DOCUMENT NUMBER	REV
K	PL	RL02-0-DBP	H

FILE NAME: Z0485H.PLS
EDIT # 18

AUTOMATED BY PRTLST.3J(25) — P A R T S L I S T — SHEET A2 OF A2

LINE	ITEM	DOCUMENT NUMBER	PART NUMBER	DESCRIPTION	QUANTITY PER VARIATION 00
31	31		1213369-00	BELT,WOVEN,ENDLESS.375WX27.148LG	1
32	32		1213686-01	MOUNTING RAIL FOR 12-13686-00	1
33	33		1214330-00	SPRING,EXTENSION,2.5LGX.360D	1
34	34		9006022-01	SCREW,PAN,PHIL 3-32X 3/8 SS	2
35	35		9006035-01	SCREW,PAN,PHIL 8-32X 1/4 SS	6
36	36		9006037-01	SCREW,PAN,PHIL 8-32X 3/8 SS	13
37	37		9006039-01	SCREW,PAN,PHIL 8-32X 1/2 SS	12
38	38		9006633-00	WASHER,LOCK,INT,.2800D X .146ID	4
39	39		9006634-00	WASHER,LOCK,INT,.2300D X .172ID	15
40	40		9006636-00	WASHER,LOCK,INT,.3800D X .200ID	3
41	41		9007079-00	CLAMP, CABLE, SCREW MNT, 1/8"	4
42	42		9008955-01	SCREW,PAN,PHIL 10-32X 15/16SS	3
43	43	D-IA-7015637-0-0	7015637-01	RL02 DATA HEAD "A" DN	1
44	44		9009884-00	WASHER, FLAT, TEFLON .62 OD X.31	4
45	45		9009885-00	WASHER, SPRING	2
46	46	B-MD-7420084-0-0	7420084-00	SHIM, LATCH	A/R
47	47	C-MD-7416865-0-0	7416865-00	BRACKET LATCH	1
48	48	D-MD-7420826-0-0	7420826-00	COVER, DC SERVO BOARD	1
49	49		9006040-01	SCREW,PAN,PHIL 8-32X 5/8 SS	2
50	50		9006653-00	WASHER, FLAT, .375 O.D. X .156 I	3
51	51		1214359-00	WASHER,FLAT,S/S .169ID X .620OD X	2
52	52		9006660-00	WASHER, FLAT, .375 O.D. X .187 I	11
53	53		9009759-00	SCREW,FLAT,PHIL, 8-32X 3/8	2
54	54		9006454-00	RIVET, BLIND, .156 DIA X .254 LG	10
55	55	B-MD-7420084-0-0	7420084-01	SHIM LATCH	A/R
56	56		3700406-00	INSTR PKG DISK RL01 DRIVE	1
57	57		9007649-00	WASHER, LOCK, EXTERNAL TOOTH #6	5
58	58		9006021-01	SCREW,PAN,PHIL 6-32X 5/16 SS	4
59	59		9008072-00	WASHER, LOCK, EXTERNAL TOOTH #8	21
60	60		9009974-00	WASHER, FLAT, METAL,.62 O.D. X	2
61	61		3613209-03	LABEL,ELECTRICAL DATA VARIATIO	1
62	62	D-MD-7420068-0-0	7420068-00	SHIELD POSITIONER	1
63	63		3614783-00	LABEL,ADH BACK "DANGER HIGH VOLT	1
64	64	A-DC-7416197-0-0	7416197-02	DECAL, LA36	1
65	65		3613211-01	DECAL,CLEAR PREPRINTED CSA 1-1/4	1
66	66		3615687-00	LABEL,ADHESIVE BACK FOR RL02	1
67	67		3615393-05	LABEL,RUB-ON,RL02	1
68	68		3616643-00	LABEL,CAUTION	1
69	69		9006418-01	SCREW,TAPPING,TYPE TT,PAN ,PHIL,	2
70	70	B-MD-7422834-0-0	7422834-00	INSULATOR,HEAD CABLE	1
71	71		9009023-00	WASHER,LOCK,INT,.3300D X .172ID	2
72	72	C-IA-7017608-0-0	7017608-00	*** THIS ITEM IS NOT USED ***	-
73	73	B-IA-7017609-0-0	7017609-00	*** THIS ITEM IS NOT USED ***	-

NOTES:
1. INT TOOTH LOCK WASHERS (ITEM 23) ARE USED OVER AND UNDER GROUND TERMINALS.
2. ORIENT TERMINALS AS SHOWN.

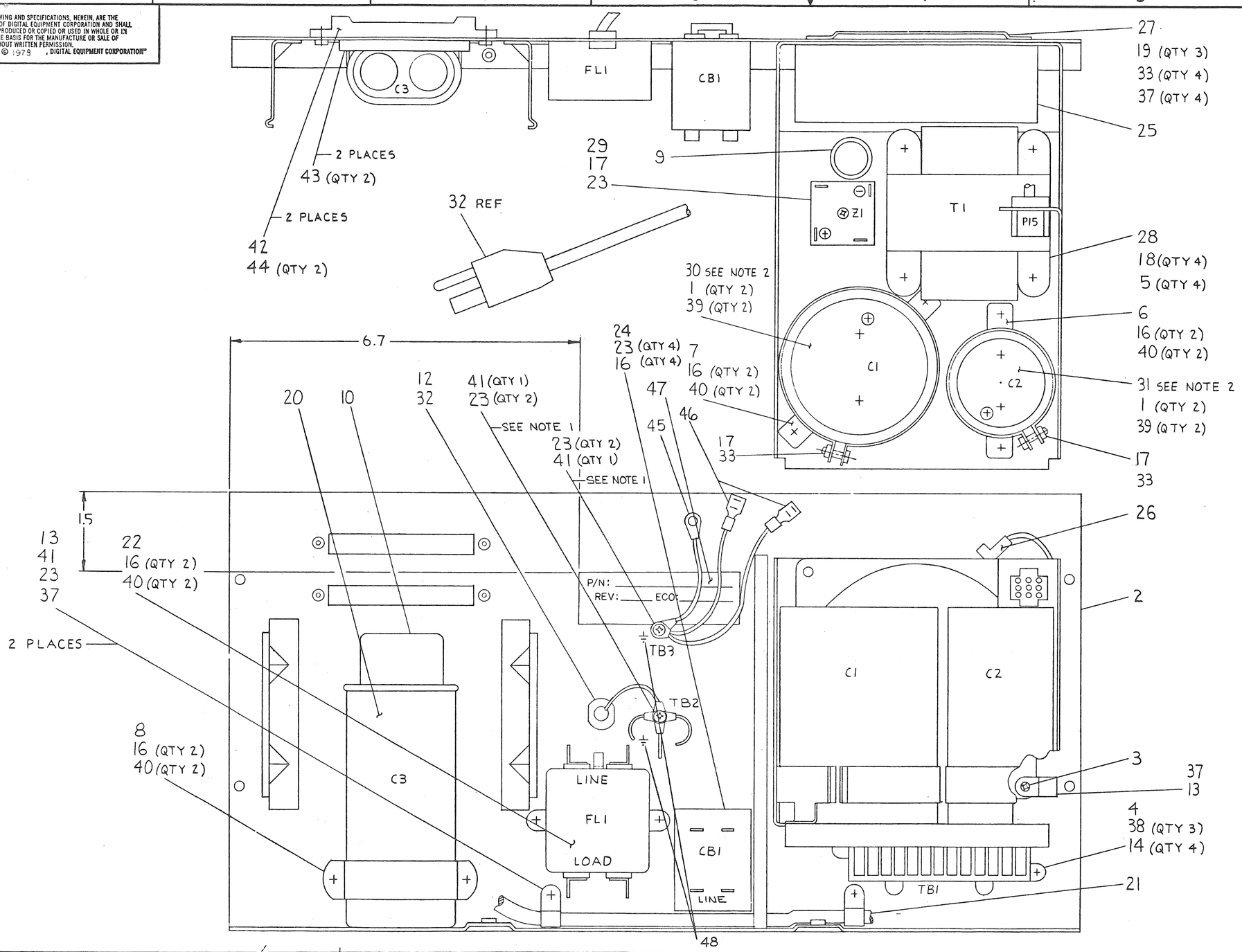

CAUTION: OFF SHEET PARTS LIST EXISTS.
SEE K-PL-7012130-0-DBP (ZØ849)

REV.	CHANGE NO.	CHK	REVISIONS
A	RELEASED AT REV A PREVIOUS REV XØ8		
B	7012130-0001 G.REICHENBERG		
C	7012130-0002 G.SCHNEIDER		
D	RL01-0009 G.SCHNEIDER		
E	7012130-CX003 K.GUENZEL		
F	7012130-CX004 G.REICHENBERG		
H	7012130-CX005 G.REICHENBERG		
J	RL01-CZ018 K.GUENZEL		
K	7012130-CZØ06 K.GUENZEL		
L	7012130-CZØ07 K.GUENZEL		
M	7012130-CZØ08 K.GUENZEL		
N	7012130-CXØ09 K.GUENZEL		
P	7012130-CXØ10 K.GUENZEL		
R	RL02-CXØ08 K.GUENZEL		
S	7012130-CXØ11 K.GUENZEL 11 FEB 80		
T	RL02-CXØ10 M. ZARICH		
U	7012130-CXØ12 D.C. 30 JUL 80 K.GUENZEL	646	
V	7012130-CXØ13 T. WALENTA 12-5-80	705	

DESCRIPTION	DWG./PART NO.	ITEM NO.
UNLESS OTHERWISE SPECIFIED DIMENSIONS ARE IN INCHES		

ANGLES ±0° 30'	CLASS OF ACCURACY (CHECK ONE)	NOMINAL DIMENSION RANGE INCHES					
		OVER 0 TO 0.2	OVER 0.2 TO 1.2	OVER 1.2 TO 4.0	OVER 4.0 TO 12.0	OVER 12.0 TO 40.0	OVER 40.0 TO 80.0
SURFACE QUALITY IN ✓ MICROINCHES	MEDIUM	±.004	±.008	±.012	±.016	±.024	±.04
	PREFERRED	±.012	±.016	±.025	±.04	±.063	±0.1

QUANTITY & VARIATION

THIRD ANGLE PROJECTION

REMOVE BURRS AND BREAK SHARP CORNERS

DO NOT SCALE DWG

MATERIAL: SEE PARTS LIST

FINISH: —/—

DRN. D. MELCHOR 12-AUG-77
CHK'D G. SCHNEIDER 23-AUG-77
ENG. G. SCHNEIDER 24-AUG-77
PROJ. ENG. R. ARNOLD 25-AUG-77
PROD. R. RYLANDER 26-AUG-77

NEXT HIGHER ASSY. E-UA-RL01-0-0

SCALE: 1/1

SHEET 1 OF 3

FIRST USED ON RL01

digital

TITLE: POWER PANEL ASSY

SIZE	CODE	NUMBER	REV.
D	AD	7012130-0-0	V

DIST.

DEC FORM NO. DRD 100-C

NOTES:

1. INPUT VOLTAGE 50 OR 60 HZ
   90 – 110, 105 – 128 VAC
   180 – 220, 210 – 256 VAC
2. OUTPUT VOLTAGE ± 11.5 VDC MIN AT MIN POINT OF THE RIPPLE. 18 VDC MAX AT HIGH LINE. (MAX OF 25 VDC AT HIGH LINE NO LOAD).
3. OUTPUT CURRENT: POSITIVE OUTPUT
   2.5 AMP CONTINUOUS
   3.5 AMP PULSE "25 MS"
   NEGATIVE OUTPUT
   .25 AMP CONTINUOUS
   3.5 AMP PULSE "25 MS"
   PULSE CURRENT ON ALTERNATE OUTPUT AT A 65 MS OUT CYCLE.
4. OUTPUT RIPPLE AT 110 VOLTS
   A. NO LOAD 100 MV P/P
   B. + 2.5 A 600 MV P/P
      – .25 A 300 MV P/P
   C. + 2.5 A 600 MV P/P
      – 3.75 A 1.5 V DURING PULSE
   RIPPLE AT 90 V RMS
   + 2.5 A 500 MV
   – 3.75 A 2 V
   + 6 A 900 MV
   – .25 A 400 MV
5. HIGH POT TEST PER UL 478
   CONNECT BOTH AC LEADS TO THE POSITIVE TERMINAL OF THE SUPPLY AND GRN WIRE GROUND TO THE NEGATIVE TERMINAL OF THE SUPPLY. CLOSE CIRCUIT BREAKER AND INCREASE VOLTAGE TO 1750 VDC, ANY CURRENT INDICATES FAILURE.

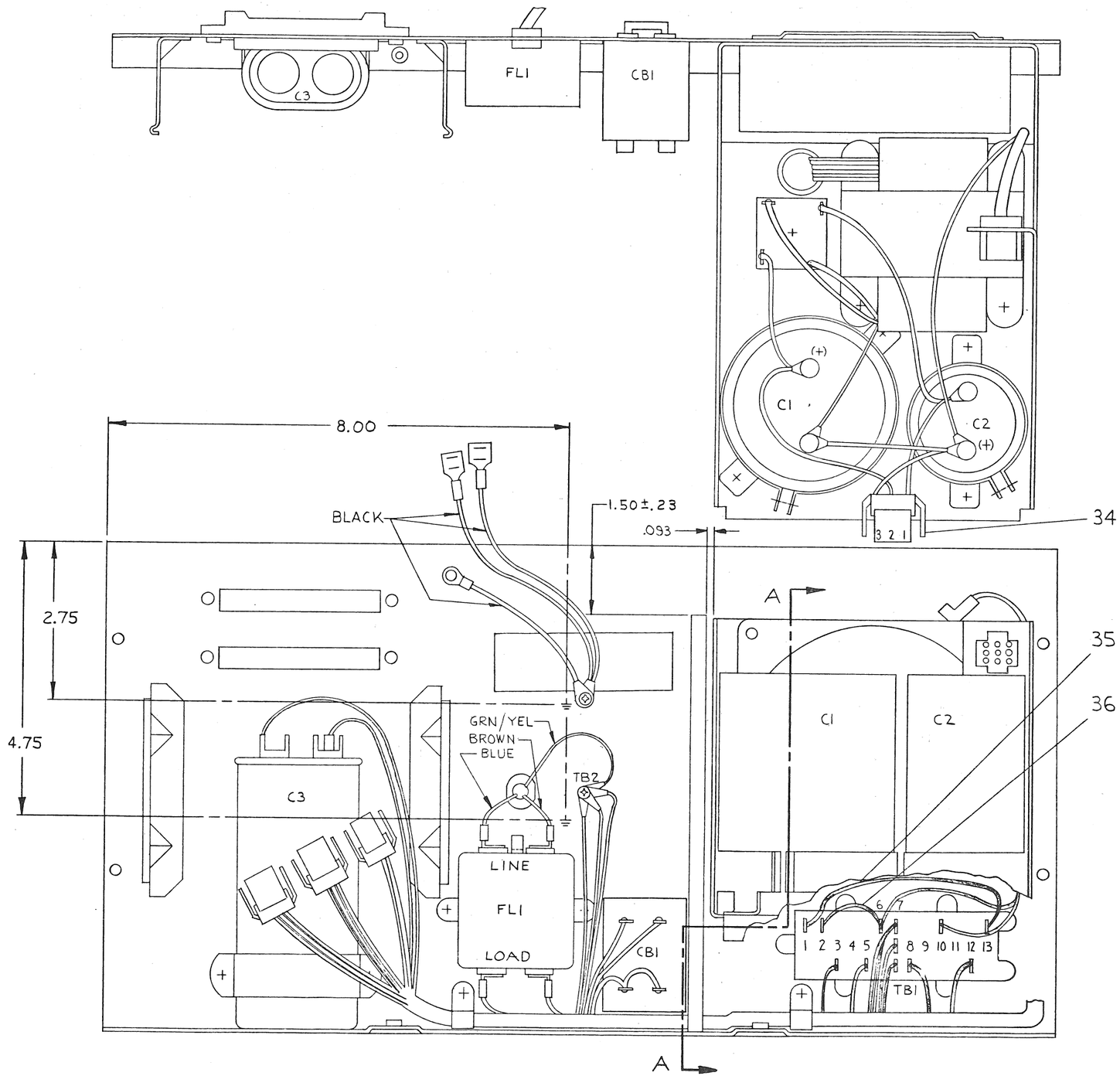

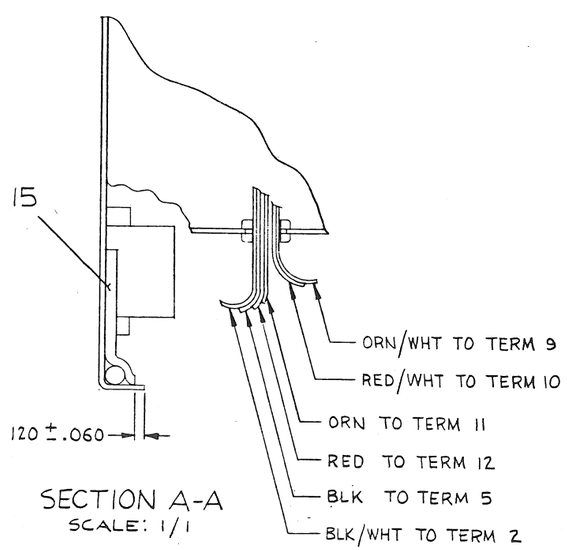

SECTION A-A
SCALE: 1/1

REVISIONS		
CHK	CHANGE NO.	REV.

TITLE	SIZE	CODE	NUMBER	REV.
POWER PANEL ASSY	D	AD	7012130 – 0 – 0	V
SCALE: 1/1 SHEET 2 OF 3	DIST.			

D AD 7012130 – 0 – 0 V

DEC FORM NO. ORD 137

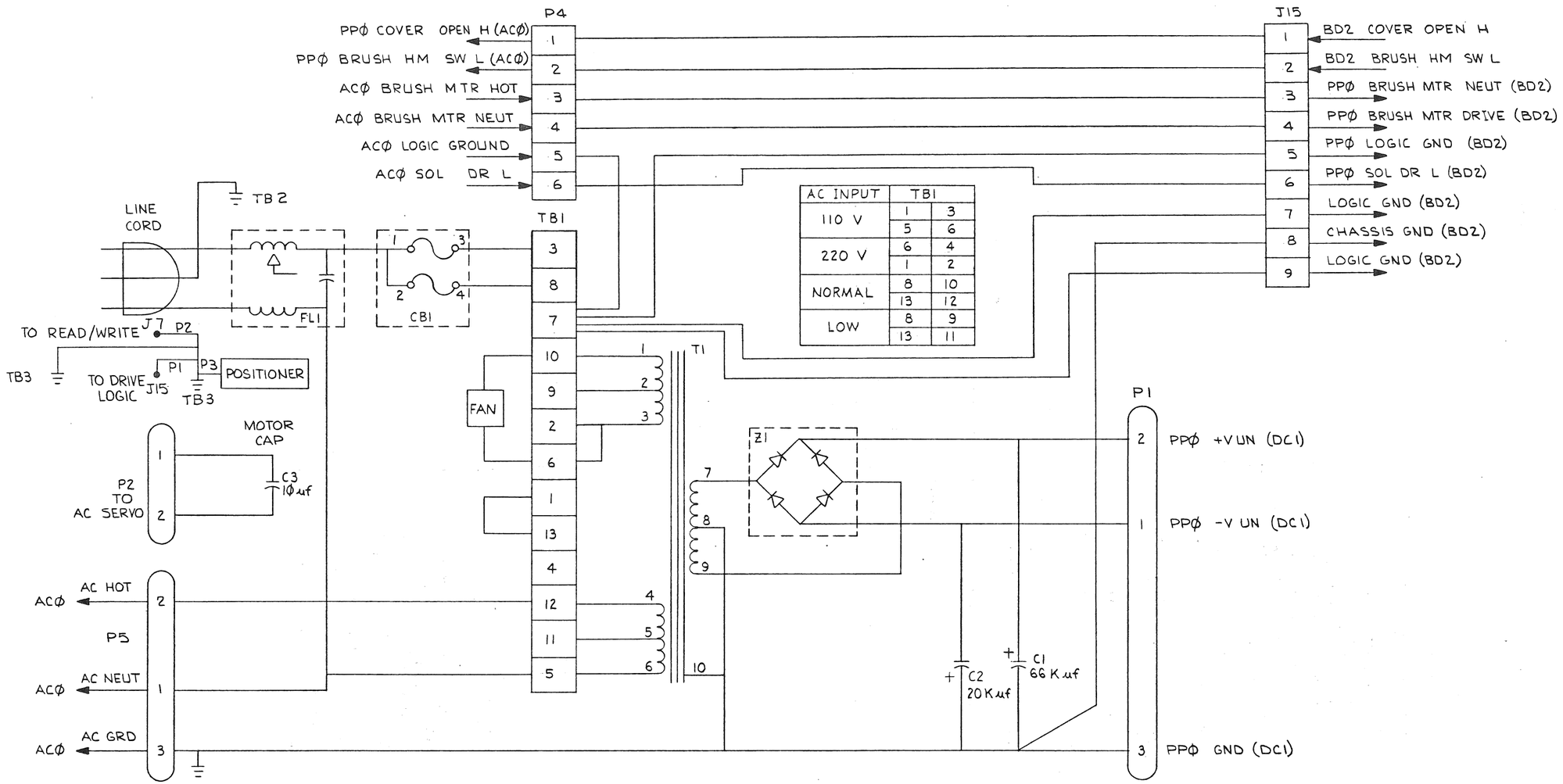

AC INPUT	TB1	
110 V	1	3
	5	6
220 V	6	4
	1	2
NORMAL	8	10
	13	12
LOW	8	9
	13	11

REVISIONS		
CHK	CHANGE NO.	REV.

TITLE	SIZE	CODE	NUMBER	REV.
POWER PANEL ASSY (PPO)	D	AD	7012130-0-0	V
SCALE: 1/1 SHEET 3 OF 3	DIST.			

DEC FORM NO. MD 137

MANIFOLD P-1021

AUTOMATED BY PRTLST.3P(44) — P A R T S L I S T — SHEET A1 OF A2

LINE	ITEM	DOCUMENT NUMBER	PART NUMBER	DESCRIPTION	QUANTITY PER VARIATION 00
1	1		9006070-01	SCREW,PAN,PHIL 10-32X 5/16 SS	4
2	2	D-IA-7416326-0-0	7416326-00	CHASSIS	1
3	3		9006028-01	SCREW,PAN,PHIL 6-32X1 SS	1
4	4	C-AD-7012127-0-0	7012127-00	CHASSIS ASSY	1
5	5		9008072-00	WASHER, LOCK, EXTERNAL TOOTH #8	4
6	6		1210430-00	BRACKET,CAPACITOR,2"	1
7	7		1210431-00	BRACKET,CAPACITOR,3-1/16"	1
8	8		1213156-01	BRACKET,CAPACITOR,WRAP-AROUND	1
9	9		9007016-00	GROMMET, RUBBER	1
10	10		1213683-00	BOOT,CAPACITOR,RUBBER	1
11	11		9007113-00	*** THIS ITEM IS NOT USED ***	-
12	12		9009768-01	BUSHING,STRAIN RELIEF .280-.393W	1
13	13		9007082-00	CLAMP,CABLE,SCREW MTD. 5/16"	3
14	14		9009800-01	SCREW,PAN,PHILLIPS, 6X7/8 SELF-	4
15	15		9009059-01	TAPE,FOAM, 1/2W X 1/4THK W/ ADH	A/R
16	16		9006020-01	SCREW,PAN,PHIL 6-32X 1/4 SS	12
17	17		9006023-01	SCREW,PAN,PHIL 6-32X 7/16 SS	3
18	18		9006036-01	SCREW,PAN,PHIL 8-32X 5/16 SS	4
19	19		9006027-01	SCREW,PAN,PHIL 6-32X 7/8 SS	3
20	20		1013102-00	10 MFD 370VAC 6% PAPER/OIL	1
21	21	D-IA-7012108-0-0	7012108-00	POWER PANEL HARNESS	1
22	22		1215360-00	FILTER,LINE,115/250V,47-400HZ, F	1
23	23		9006633-00	WASHER,LOCK,INT,.2800D X .146ID	11
24	24		1216827-00	CKT BKR 2.5 A 250V 2P MAGNETIC	1
25	25		1209403-01	FAN,115CFM,SLEEVE BRNG	1
26	26	B-IA-7012110-0-0	7012110-00	HARNESS AC-TB	1
27	27		1210263-00	GUARD,FINGER 4.125 X 4.125 MTG H	1
28	28		1613897-00	XFMR P=AB S=11.5@6A	1
29	29		1110051-00	DM 16 ASSY@200V & 25A #990-3	1
30	30		1013530-00	66,000 MFD 30V +75-10% AL EL	1

REVISION HISTORY			
ENG	ECO NUMBER	REV	
KG	7012130-CX010	P	
KG	RL02-CX008	R	
KG	7012130-CX011	S	
MZ	RL02-CX010	T	
KG	7012130-CX012	U	
IW	7012130-CX013	V	
	Dan Noonan 12-5-80		

BASIC PART NO: ORL01

SECTION A OF A

SECTION. VARIATION INDEX
[A] 00
[B]
[C]
[D]
[E]
[F]

DRN: D. MELCHOIR — DATE: 12-AUG-76
CHK'D: G. SCHNEIDER — DATE: 24-AUG-77
DES.ENG.: G. SCHNEIDER — DATE: 24-AUG-77
RESP.ENG.: P. ARNOLD — DATE: 30-AUG-77
MFG.ENG.: B. RYLANDER — DATE: 30-AUG-77

ASSEMBLY NUMBER: D-AD-7012130-0-0
TOP DOCUMENT NUMBER: # B-DD-RL02-0

D I G I T A L

TITLE: POWER PANEL ASSEMBLY — PARTS LIST

DOCUMENT NUMBER: SIZE K, CODE PL, NUMBER 7012130-0-DBP, REV V

FILE NAME: Z0849V.PLS — EDIT # 17

AUTOMATED BY PRTLST.3P(44) — P A R T S L I S T — SHEET A2 OF A2

LINE	ITEM	DOCUMENT NUMBER	PART NUMBER	DESCRIPTION	QUANTITY PER VARIATION 00
31	31		1013531-00	20,000 MFD 40V +75-10% AL EL	1
32	32	B-IA-7012109-0-0	7012109-00	POWER HARNESS	1
33	33		9006560-00	NUT,KEP , 6-32 X5/16AF	6
34	34	C-IA-7012142-0-0	7012142-00	CABLE	1
35	35	B-IA-7012125-0-0	7012125-0E	INTERCONNECT CABLE	1
36	36	B-IA-7012125-0-0	7012125-0B	TB INTERCONNECTOR HARNESS	1
37	37		9006653-00	WASHER, FLAT, .375 O.D. X .156 I	7
38	38		9009800-06	SCREW,PAN,PHILLIPS, 6X.38	3
39	39		9006635-00	WASHER,LOCK,INT,.3100D X .200ID	4
40	40		9007649-00	WASHER, LOCK, EXTERNAL TOOTH #6	8
41	41		9006021-01	SCREW,PAN,PHIL 6-32X 5/16 SS	4
42	42		1211591-35	CONN,ZIF 40PIN RCPT ASSY	2
43	43		1211591-38	CONN,ZIF 40PIN RCPT,SWAP IN GU	4
44	44		9008301-01	SCREW,PAN,PHIL 4-40X 1/4 SS	4
45	45	B-IA-7017609-0-0	7017609-00	GROUND HARNESS	1
46	46	C-IA-7017608-0-0	7017608-00	GROUND HARNESS	1
47	47		9009255-00	LABEL, POWER SUPPLY, 2-15/16 " L	1
48	48		3612680-00	DECAL, GROUND SIGN PER 3E6 *	2

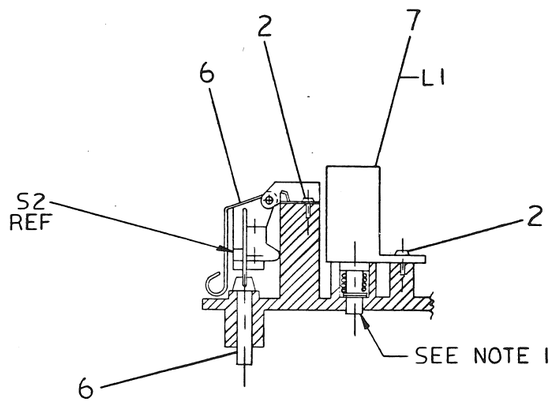

SECTION A-A

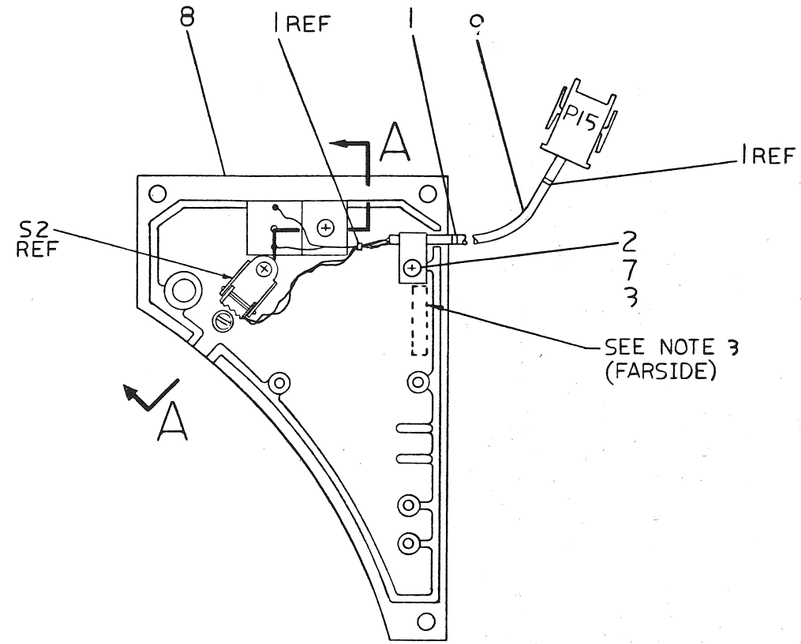

NOTES:

1. PLUNGER OF SOLENOID, COVER LOCK (ITEM 5) MUST MOVE FREELY. WHEN ASSEMBLY IS POSITIONED IN "UP" POSITION (TIP OF PLUNGER POINTING UP) A D C VOLTAGE OF 6.9 VOLTS SHALL PULL THE PLUNGER DOWN.
2. CONNECT LEADS OF SOLENOID, COVER LOCK (ITEM 5) TO PINS 6 & 7 OF CONNECTOR BODY (P15). DRESS WIRES AND TIE TO COVER, SWITCH HARNESS (ITEM 9) WITH TIE, CABLE (ITEM 1) AS SHOWN.
3. PART TO BE MARKED WITH PART NO. (7016991-00) AND LATEST REVISION LETTER IN AREA SHOWN (FARSIDE).

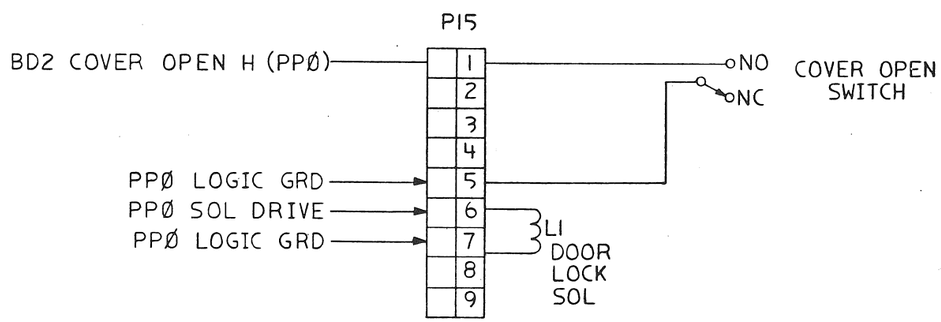

CIRCUIT SCHEMATIC

CAUTION: OFF SHEET PARTS LISTS EXISTS.
SEE K-PL-7016991-0-DBP (Z0984).

REVISION HISTORY		
DATE	ECO NUMBER	REV.
582	RELEASED TO ECO CONTROL PER ECO P101-CX048 AT HEV * K.D. 1 OCT 80 K. GUENZEL	*

DESCRIPTION	DRAWING NO.	PART NO.	ITEM NO.

UNLESS OTHERWISE SPECIFIED DIMENSIONS ARE IN INCHES AND THE FOLLOWING TOLERANCES APPLY (PER DEC STD 114)

INCHES TOLERANCES	ANGLES ±0°30'	APPLICABLE DIMENSION RANGE (CHECK ONE)	DIMENSION RANGE IN INCHES: OVER 0 TO 0.2	OVER 0.2 TO 1.2	OVER 1.2 TO 4.0	OVER 4.0 TO 12.0	OVER 12.0 TO 40.0	OVER 40.0 TO 60.0
.X = ± .1	SURFACE QUALITY	☐	± .02		± .03	± .05	± .10	
.XX = ± .02		☐	± .004	± .008	± .012	± .016	± .024	± .04
.XXX = ± .005	MICROINCHES	☐						

QUANTITY & VARIATION

THIRD ANGLE PROJECTION

DO NOT SCALE DRAWING

REMOVE BURRS AND BREAK SHARP CORNERS

MATERIAL: SEE PARTS LIST

FINISH

		DATE
DRN	K Dowd	1 OCT 80
CHK'D	R E Tilth	22 OCT 80
DES. ENG	Jean Hoult	3 NOV 80
RESP. ENG	Jean Hoult	3 NOV 80
MFG ENG	C J Daf	
NEXT HIGHER DOC.	E-UA-RLØ1-Ø-Ø	

TITLE: digital SWITCH COVER ASSY

DOCUMENT NUMBER: SIZE D CODE AD NUMBER 7016991-0-0 REV. *

SCALE 1/1 SHEET 1 OF 1

DRD 1000

AUTOMATED BY PRTLST.3L(40)

P A R T S L I S T

LINE	ITEM	DOCUMENT NUMBER	PART NUMBER	DESCRIPTION	QUANTITY PER VARIATION 00
1	1		9007031-00	TIE,CABLE BUNDL.DIA 0- 3/4'=101	3
2	2		9009800-06	SCREW,PAN,PHILLIPS, 6X.38	3
3	3		9007081-00	CLAMP,CABLE,SCREW MTD. 1/4'	1
4	4	C-AD-7012132-0-0	7012132-00	CARTRIDGE SENSE SWITCH ASSY.	1
5	5	C-PS-1213204-0-0	1213204-00	SOLENOID,COVER LOCK	1
6	6	B-MD-7416858-0-0	7416858-00	CART SENSE PLUNGER	1
7	7		9006653-00	WASHER, FLAT, .375 O.D. X .156 I	1
8	8	E-IA-7415224-0-0	7415224-00	COVER BRUSH DRIVE	1
9	9	C-IA-7017333-0-0	7017333-00	COVER, SWITCH HARNESS	1

REVISION HISTORY			
ENG	ECO NUMBER	REV	
KG	RL01-CX048	*	INS MAJOR FOR K. GUENZEL

BASIC PART NO: 7016991

SECTION A OF A

SECTION. VARIATION INDEX

[A] 00

[B]

[C]

[D]

[E]

[F]

DRN: K. DAVIS — DATE: 1 OCT 80

CHK'D: D. MILLER — DATE: 20 OCT 80

DES.ENG.: K. GUENZEL — DATE: 22 OCT 80

RESP.ENG.: I. WALENTA — DATE: 22 OCT 80

MFG.ENG.: J. BLAND — DATE: 22 OCT 80

ASSEMBLY NUMBER: D-AD-7016991-0-0

TOP DOCUMENT NUMBER: *B-DD-RL01-0

D	I	G	I	T	A	L

TITLE: PARTS LIST — SWITCH COVER ASSY

DOCUMENT NUMBER			
SIZE	CODE	NUMBER	REV
K	PL	7016991-0-DBP	*

FILE NAME: Z0984*.PLS

EDIT #: 6

COMPONENT SIDE VIEW

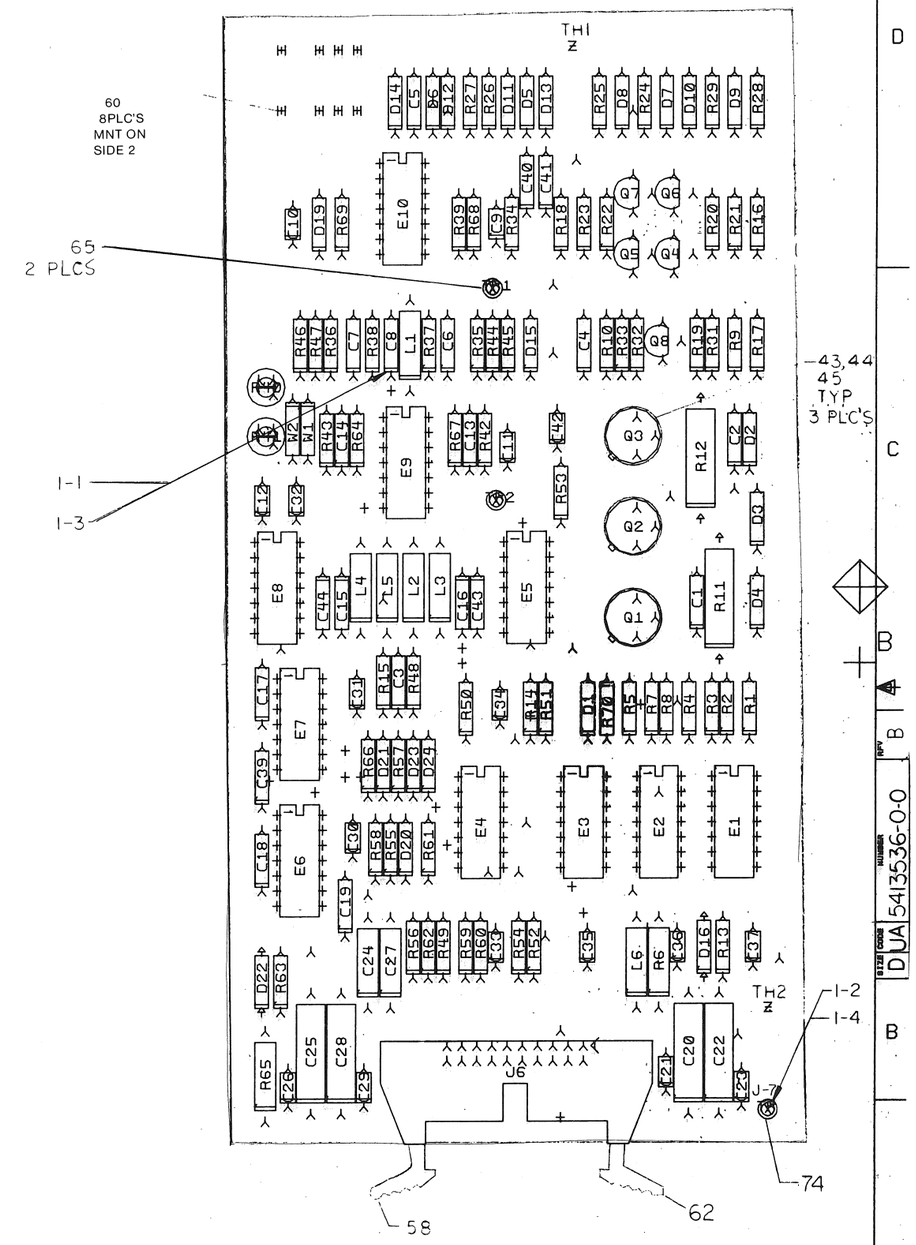

NOTES:

CHK	CHANGE NO	REV
	5413536-CX001 M.ZARICH	B

ETCH REV. B
P.C. DESIGN DATA BASE REV. BL

SIGNATURES	DATE
DRN.	8/3/78
CHK'D.	8/3/78
ENG. B Noguchi	8/3/78
PROJ.ENG.	
PROD.	
SCALE 2/1	
SHT. 1 OF 2	

digital

TITLE RL02
READ/WRITE BOARD

SIZE	CODE	NUMBER	REV
D	UA	5413536-0-0	B

NEXT HIGHER ASSY: B-DD-5413536-0

AUTOMATED BY PRTLST.2E(3) — P A R T S L I S T — SHEET A1 OF A2

LINE	ITEM	DOCUMENT NUMBER	PART NUMBER	DESCRIPTION	QTY PER VARIATION *00	REFERENCE DESIGNATOR
1	1	D-MD-5013535-0-0	5013535-00	ETCHED CIRCUIT BD	1	
2	2		1001610-00	.01 MFD 50V -20+80 Z5U AXIAL	17	C9-C12,C21,C23,C26,C29-C37,C42
3	3		1005306-00	6.8MFD 35V 10% S.TANT	4	C20,C22,C25,C28
4	4		1013466-14	82.0 MMF 50V 5% CER	2	C16,C43
5	5		1013466-06	100.0 MMF 50V 5% CER.	1	C8
6	6		1013466-05	56.0 MMF 50V 5% CER.	1	C5
7	7		1013466-07	220.0 MMF 50V 5% CER.	5	C1,C2,C4,C17,C39
8	8		1013466-09	1000.0 MMF 50V 10% CER.	1	C18
9	9		1013466-11	.22 MFD 50V +80/-20% CER.	2	C24,C27
10	10		1013466-15	1200.0 MMF 50V 5% CER.	3	C19,C40,C41
11	11		1109943-00	1N 4733A VZ= 5.1 5% 1W Y	2	D16,D22
12	12		1113953-00	1N 5523D VZ= 5.1 1%	1	D1
13	13		1100122-00	1N 748A VZ= 3.9 5%	1	D19
14	14		1111577-00	1N 4454 TR= 4NS PIV= 50 S	11	D5-D10,D15,D20,D21,D23,D24
15	15		1300250-00	150.0 .25 W 5.0 % CC	1	R5
16	16		1300229-00	100.0 .25 W 5.0 % CC	5	R39,R52,R54,R59,R69
17	17		1300232-00	100.0 1.0 W 5.0 % CC	2	R11,R12
18	18		1300247-00	120.0 .25 W 5.0 % CC	1	R56
19	19		1300365-00	1.0 K .25 W 5.0 % CC	8	R13,R14,R35,R36,R48,R49,R66,R70
20	20		1300444-00	3.90 K .25 W 5.0 % CC	1	R46
21	21		1300447-00	4.70 K .25 W 5.0 % CC	3	R9,R10,R32
22	22		1301775-00	820.0 .25 W 5.0 % CC	1	R31
23	23		1301317-00	10.0 .25 W 5.0 % CC	1	R63
24	24		1302612-00	1.78 K 1/4W 1% RN55D-F 100PPM	2	R50,R51
25	25		1300195-00	33.0 .50 W 5.0 % CC	2	R6,R65
26	26		1304725-00	300 1/4W 1% RN55D-F 100PPM	1	R62
27	27		1312930-00	5.10 K .25 W 5.0 % CC	2	R55,R58
28	28		1301424-00	680.0 .25 W 5.0 % CC	4	R16,R18,R21,R23
29	29		1302391-00	20.0 K .25 W 5.0 % CC	1	R60
30	30		1300426-00	2.70 K .25 W 5.0 % CC	1	R33

REVISION HISTORY			BASIC PART NO: 13536		
ENG	ECO NUMBER	REV	SECTION A OF A		
	INIT	A	SECTION.VARIATION INDEX	DRN: JERRY BEST	DATE: 14-AUG-78
MZ	5413536-CX001	B	[A] 00	CHK'D: L. ROOHR	DATE: 14-AUG-78
	M. Zaeich W.C.M. 17 JAN 80		[B]	DES.ENG: B. NOGUCHI	DATE:
			[C]	RESP.ENG.: B. NOGUCHI	DATE: 14-AUG-78
			[D]	MFG.ENG.: P. CHURCH	DATE:
			[E]	ASSEMBLY NUMBER: D-UA-5413536-0-0	TOP DOCUMENT NUMBER: RL02
			[F]		
			[H]		
			[J]		
			[K]		
			[L]		
			[M]		
			[N]		

D	I	I	G	I	T	A	L

TITLE: PARTS LIST — READ/WRITE BOARD

DOCUMENT NUMBER: SIZE K, CODE PL, NUMBER 5413536-0-DBP, REV B

FILE NAME: Z1091B.PLS — EDIT # 7

AUTOMATED BY PRTLST.2E(3) — P A R T S L I S T — SHEET A2 OF A2

LINE	ITEM	DOCUMENT NUMBER	PART NUMBER	DESCRIPTION	QTY PER VARIATION *00	REFERENCE DESIGNATOR
31	31		1302956-00	196 1/4W 1% RN55D-F 100PPM	3	R2,R3,R4
32	32		1300439-00	3.30 K .25 W 5.0 % CC	2	R20,R22
33	33		1305143-00	825 1/4W 1% RN55D-F 100PPM	2	R44,R45
34	34		1303303-00	2.61 K 1/4W 1% RN55D-F 100PPM	4	R24,R25,R28,R29
35	35		1302645-00	1.1 K 1/4W 1% RN55D-F 100PPM	1	R61
36	36		1301477-00	82.0 .25 W 5.0 % CC	1	R68
37	37		1301322-00	180.0 .25 W 5.0 % CC	2	R37,R38
38	38		1313469-00	240.0 .25 W 5.0 % CC	1	R34
39	39		1303045-00	3.16 K 1/4W 1% RN55D-F 100PPM	2	R26,R27
40	40		1501913-00	2N 2904A PNP 600MW SI 60 40 Y	3	Q1-Q3
41	41		1513489-00	2N 4401 NPN 350MW SI 40 20	3	Q6-Q8
42	42		1513490-00	2N 4403 PNP 350MW SI-40 30	2	Q4,Q5
43	43		1210001-00	HEAT SINK BLACK	3	
44	44		9007201-00	TRANSIPADS $10253	3	
45	45		9008268-00	COMPOUND, THERMAL JOINT $	A/R	
46	46		1611257-01	CHOKE(CERAMIC BEAD)AXIAL LEAD,ON	1	L6
47	47		1613898-01	33.0 UH INDUCTOR	4	L2-L5
48	48		1613898-02	39.0 UH INDUCTOR	1	L1
49	49		1910268-00	DEC 75107B RECEIVER,LINE,DUAL,	1	E8
50	50		1909686-00	7404 INVERTER GATE-HEX 1I	1	E3
51	51		1910544-00	74S74 FF-D DUAL,EDGE TRIGG	1	E2
52	52		1910644-00	733 DIFFERENTIAL AMP,WID	2	E9,E10
53	53		1910741-00	7406 INVERTER GATE-HEX 1I	1	E7
54	54		1911521-00	7432 OR GATE-QUAD 2IN, PO	1	E1
55	55		1910268-01	DEC 75107B-01 RECEIVER,LINE,DUA	2	E5,E4
56	56		1910725-00	75108B RECEIVER,LINE,DUAL,	1	E6
57	57		1209941-06	HEADER,100 20POS RT ANGLE	1	J6
58	58		1209941-03	HEADER RT ANGLE LEFT L	1	
59	59		1209941-04	HEADER RT ANGLE,RIGHT	1	
60	60		1210385-01	PIN 1POS WIRE WRAP	8	
61	61		9007791-00	TERM PCB 2POS SOLDER,TURRET	2	TP1,TP2
62	62		1303067-00	422 1/4W 1% RN55D-F 100PPM	2	R42,R43
63	63		1300219-00	68.0 .25 W 5.0 % CC	4	R7,R8,R47,R57
64	64		1301423-00	6.80 K .25 W 5.0 % CC	3	R15,R64,R67
65	65		1300391-00	1.50 K .25 W 5.0 % CC	2	R17,R19
66	66		1114117-00	1N 4152 PIV=450 I=75M	3	D2-D4
67	67		1113003-00	IN 5282 PIV=55 I=500M D035	4	D11-D14
68	68		1015573-01	5600.0 MMF 50V 5% CER. $	5	C3,C6,C7,C13,C14
69	69		1304857-00	237 1/4W 1% RN55D-F 100PPM	1	R1
70	70		1300309-00	390.0 .25 W 5.0 % CC	1	R53
71	71		1013466-17	150 MMF 50V 5% CER	2	C15,C44
72	72		1309150-07	2 K 1/2W10% POT 100PPM	2	R40,R41
73	73		9009185-00	JUMPER, WIRE, INSULATED, BLACK B	2	W1,W2
74	74		1217377-00	TERM QUICK 1POS TAB PC MNT	1	J7

UNDERGOING CHANGE

D	I	I	G	I	T	A	L

TITLE: READ/WRITE BOARD — SECTION A OF A

DOCUMENT NUMBER: SIZE K, CODE PL, NUMBER 5413536-0-DBP, REV B

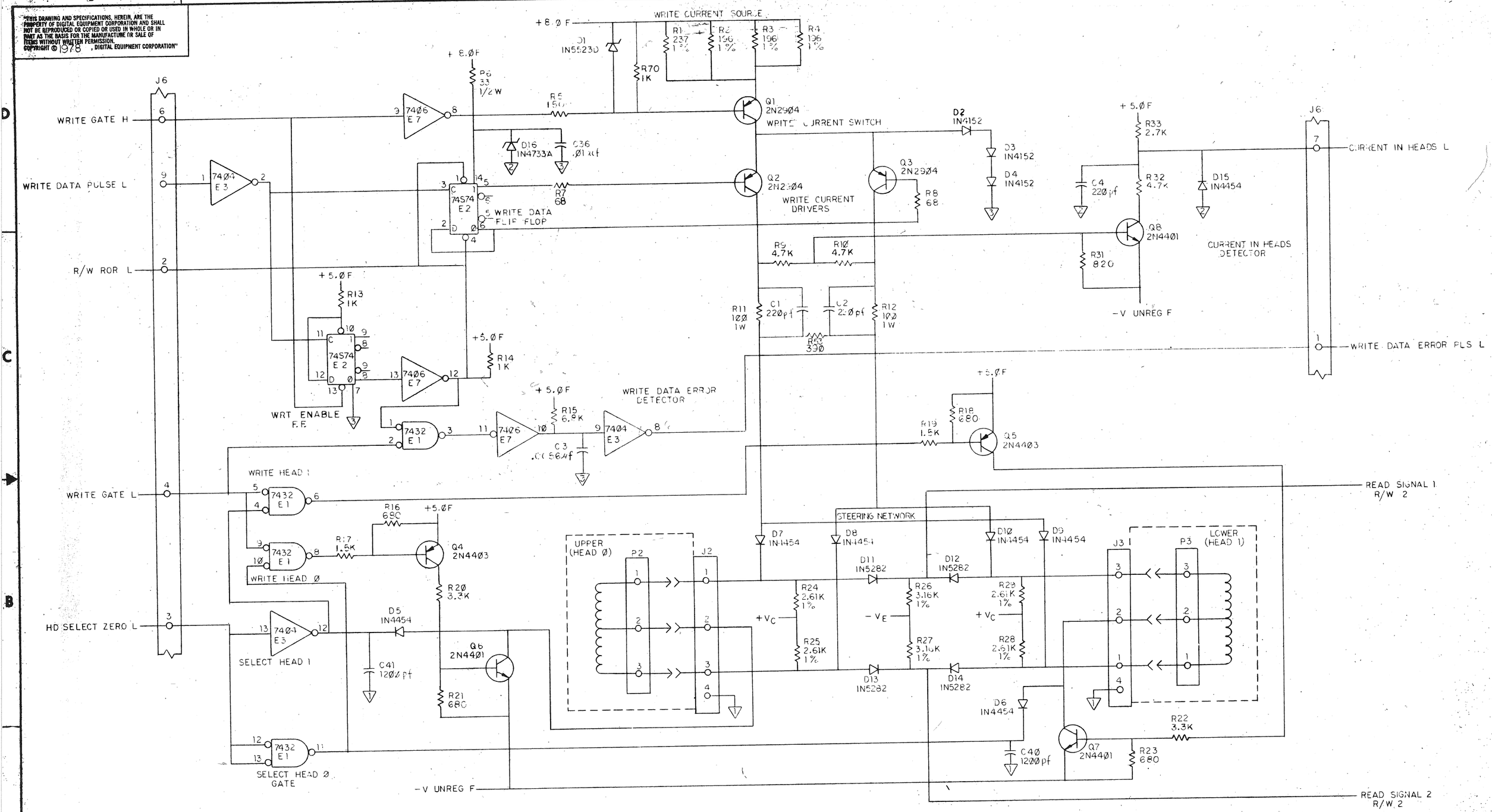

NOTE.
1. FOR RLO1 CUT W2 AND LEAVE IN W1.
FOR RLO2 CUT W1 AND LEAVE IN W2.

DRN. B. Nichols	14 July 78	FIRST USED ON RL02
CHK'D L. Rosh	8/8/78	digital
ENG. R. Zajac	8/18/78	TITLE READ / WRITE BOARD
PROJ. ENG.	8/8/78	
PROD. P. Chuck P. Bauman	9/27/78	
NEXT HIGHER ASSY.		SIZE D CODE CS NUMBER 5413536-0-1 REV. B
SCALE —		
SHEET 1 OF 2		DIST.

REVISIONS		
CHGR	CHANGE NO.	REV.
BRJ 7 Jan 80	5413536-CX001 M. ZARICH M. ZARICH	B

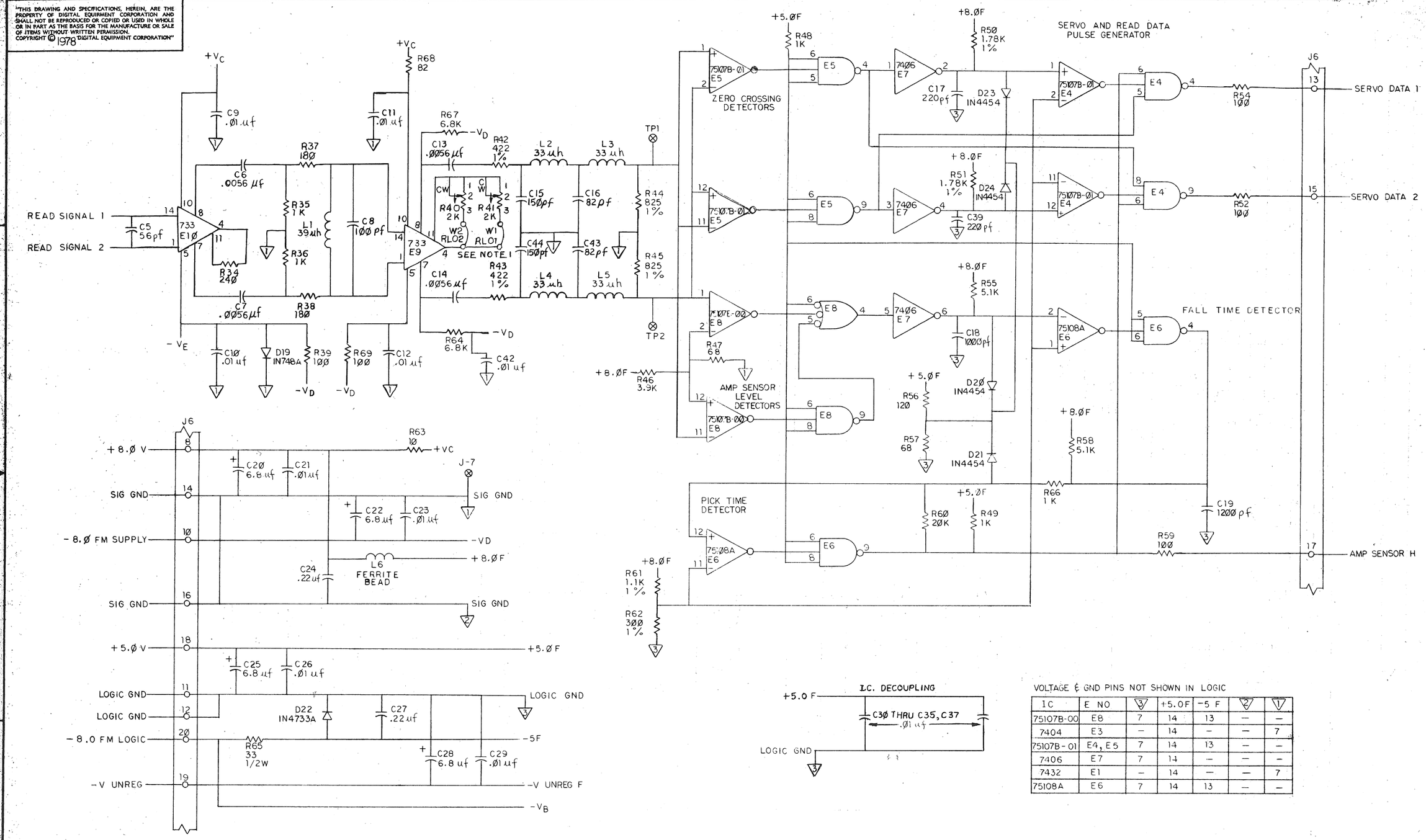

VOLTAGE & GND PINS NOT SHOWN IN LOGIC

IC	E NO	3	+5.0F	-5 F	2	1
75107B-00	E8	7	14	13	—	—
7404	E3	—	14	—	—	7
75107B-01	E4, E5	7	14	13	—	—
7406	E7	7	14	—	—	—
7432	E1	—	14	—	—	7
75108A	E6	7	14	13	—	—

REVISIONS		
CHK	CHANGE NO.	REV.

TITLE	SIZE	CODE	NUMBER	REV.
READ/WRITE BOARD	D	CS	5413536-0-1	B
SCALE — / —	SHEET 2 OF 2	DIST.		

COMPONENT SIDE VIEW

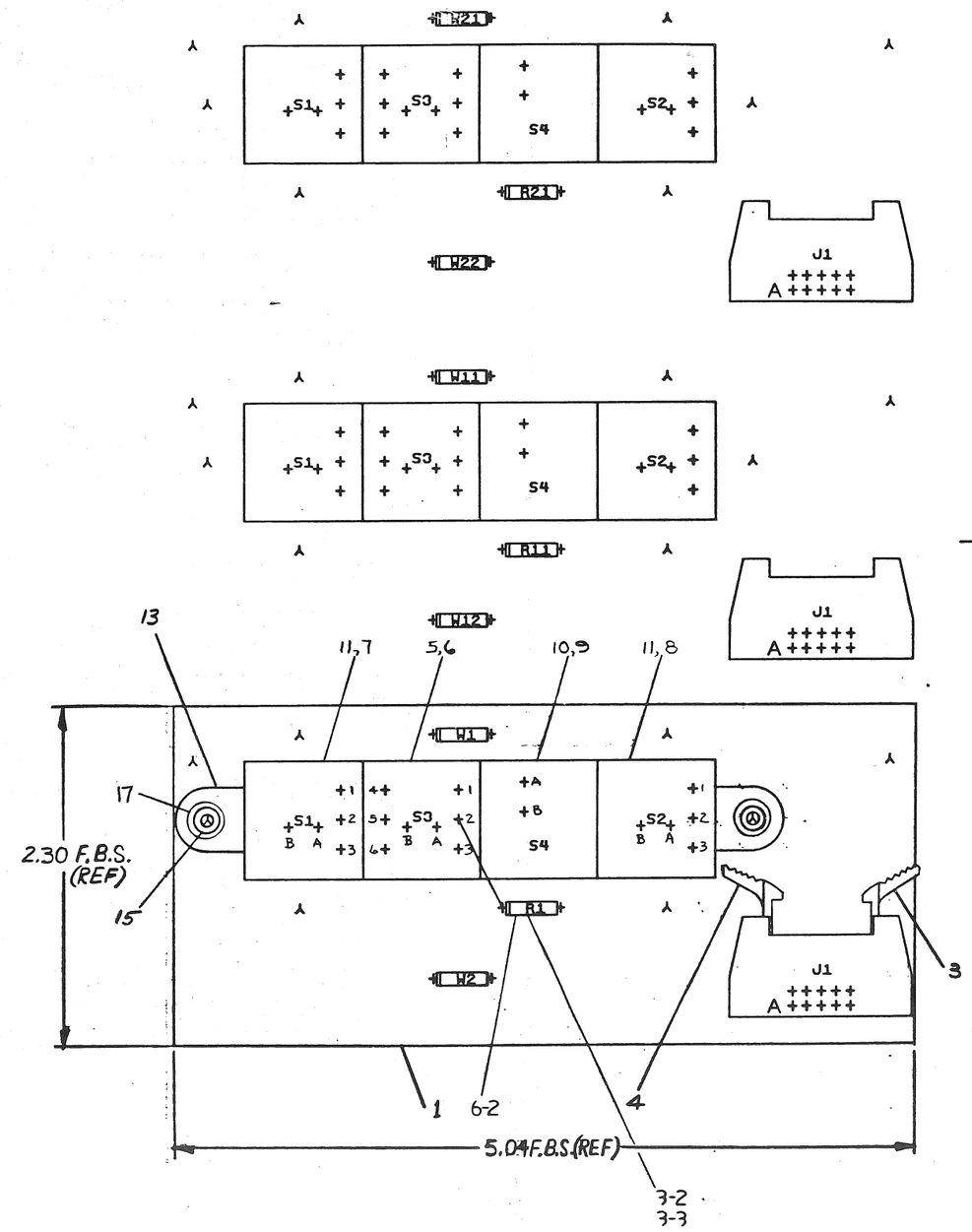

NOTES:

1. ALL MANUFACTURING INFORMATION, DATE CODE, CIRCUIT SCHEMATIC REV, QUALITY CONTROL STAMPS, ETC. ARE TO BE STAMPED ON ETCH SIDE (SIDE 2) OF MODULE.

CHK	CHANGE NO	REV
JB 11-24-71	5411846-0001	E
11-24-71	5411846-CZ002 G. REICHENBERG	F
633 11-77	5411846-CX005 D.C. 4AUG80 M ZARICH	H
635 EPM Oct 80	5411846-CX006 D.C. 29SEP80 M.ZARICH	J

ETCH REV. D
P.C. DESIGN DATA BASE REV. D

SIGNATURES	DATE
DRN. M. Ripley	11/5/76
CHK'D. B. Burnell	1-11-77
ENG.	3/7/77
PROJ.ENG.	3/7/77
PROD.	
SCALE 2/1	
SHT. 1 OF 3	
NEXT HIGHER ASSY. B-DD-5411846-0	

digital

TITLE FRONT PANEL

SIZE	CODE	NUMBER	REV
D	UA	5411846-0-0	J

1 MS#

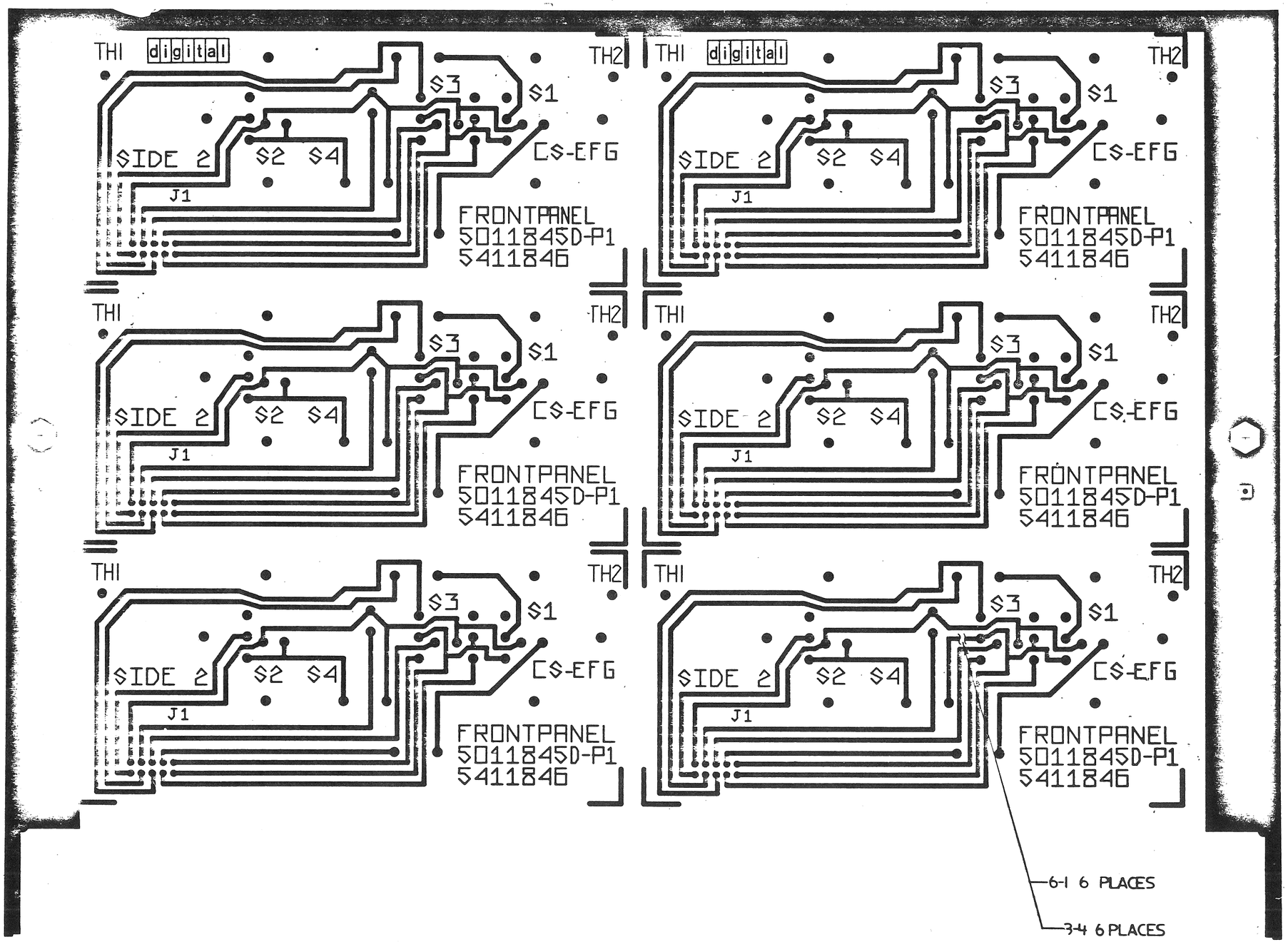

REVISIONS		
CHK	CHANGE NO	REV

TITLE FRONT PANEL	SIZE D	CODE UA	DWG. NO. 5411846-0-0	REV. J
SCALE NONE	SHEET 2 OF 3	DIST.		

REWORK INSTRUCTIONS:

ECO 5411846-CX005:

3-1 SEE D-EC-5011845-0-0 FOR EC REWORK INSTRUCTIONS.

COMPONENT DELETES:
3-2 DELETE R1.
COMPONENT ADDS:
3-3 ADD R1 (180 Ω).
WIRE ADDS:
3-4 SIDE 2-ADD WIRE FROM S3 PIN 2 TO R1 ETCH (SOLDER FLAT TO ETCH) (6 PLACES).

ECO 5411846-CX006:

WIRE DELETES:
6-1 SIDE 2-DELETE WIRE FROM S3 PIN 2 TO R1 ETCH. (6 PLACES).
WIRE ADDS:
6-2 SIDE 1-ADD WIRE ON LEFT SIDE OF R1 TO S3 PIN 2.

REVISION HISTORY		
DATE	ECO NUMBER	REV.

TITLE: FRONT PANEL

DOCUMENT NUMBER			
SIZE	CODE	NUMBER	REV.
D	UA	5411846-0-0	J
SCALE NONE		SHEET 3 OF 3	

DRD 137A

AUTOMATED BY PRTLST.3P(44) P A R T S L I S T SHEET A1 OF A1

LINE	ITEM	DOCUMENT NUMBER	PART NUMBER	DESCRIPTION	QTY PER VARIATION 00	REFERENCE DESIGNATOR
1	1	D-MD-5011845-0-0	5011845-00	54-11846 ETCH CRKT BRD	1	
2	2		1209941-05	HEADER,100 10POS RT ANGLE	1	J1
3	3		1209941-04	HEADER RT ANGLE,RIGHT	1	
4	4		1209941-03	HEADER RT ANGLE LEFT L	1	
5	5		1212690-02	SW,PB 1P RK06 UNIT SELECT	1	S3
6	6		1212691-00	SW,PB CAP "O/READY" FOR 12-1	1	
7	7		1212714-05	SW,PB CAP,YEL/BLK,"LOAD"	1	
8	8		1212714-01	SW,PB CAP,YEL/BLK,"WRITE PROT"	1	
9	9		1212714-02	SW,PB CAP,RED/BLK,"FAULT"	1	
10	10		1212715-02	INDICATOR,DISPLAY PANEL,W/14V LA	1	S4
11	11		1212717-05	SW,PB 1P 3A W/14V LAMP	2	S1,S2
12	12		1212716-01	LAMP,WEDGE,14V	1	
13	13		1213188-01	MOUNTING BRACKET,SWITCH	1	
14	14		1301322-00	180.0 .25 W 5.0 % CC	1	R1
15	15		9006732-00	EYELET, ROLLED FLANGE, .121 OD X	2	
16	16		9107560-01	WIRE,BUSS,22AWG	2	W1,W2
17	17		9006655-00	WASHER, FLAT, .312 O.D. X .125 I	2	

REVISION HISTORY			BASIC PART NO: 5411846											
ENG	ECO NUMBER	REV	SECTION A OF A	DRN: S. MARLOW	DATE: 7-APR-76	D	I	G	I	T	A	L		
MZ	5411846-CX005	J	SECTION.VARIATION INDEX [A] 00	CHK'D: P. BURNELL	DATE: 10-JAN-77	TITLE PARTS LIST FRONT PANEL								
			[B]											
			[C]	DES.ENG: G. REICHENBERG	DATE: 7-MAR-77									
			[D]											
			[E]			DOCUMENT NUMBER								
			[F]	RESP.ENG.: G. REICHENBERG	DATE: 7-MAR-77									
			[H]			SIZE	CODE	NUMBER	REV					
			[J]											
			[K]	MFG.ENG.: L. KIRK	DATE: 9-MAR-77	K	PL	5411846-0-DBP	J					
			[L]											
			[M]	ASSEMBLY NUMBER:	TOP DOCUMENT NUMBER:	FILE NAME:	EDIT #							
			[N]	D-UA-5411846-0-0	* B-DD-5411846-0	Z1580J.PLS	3							

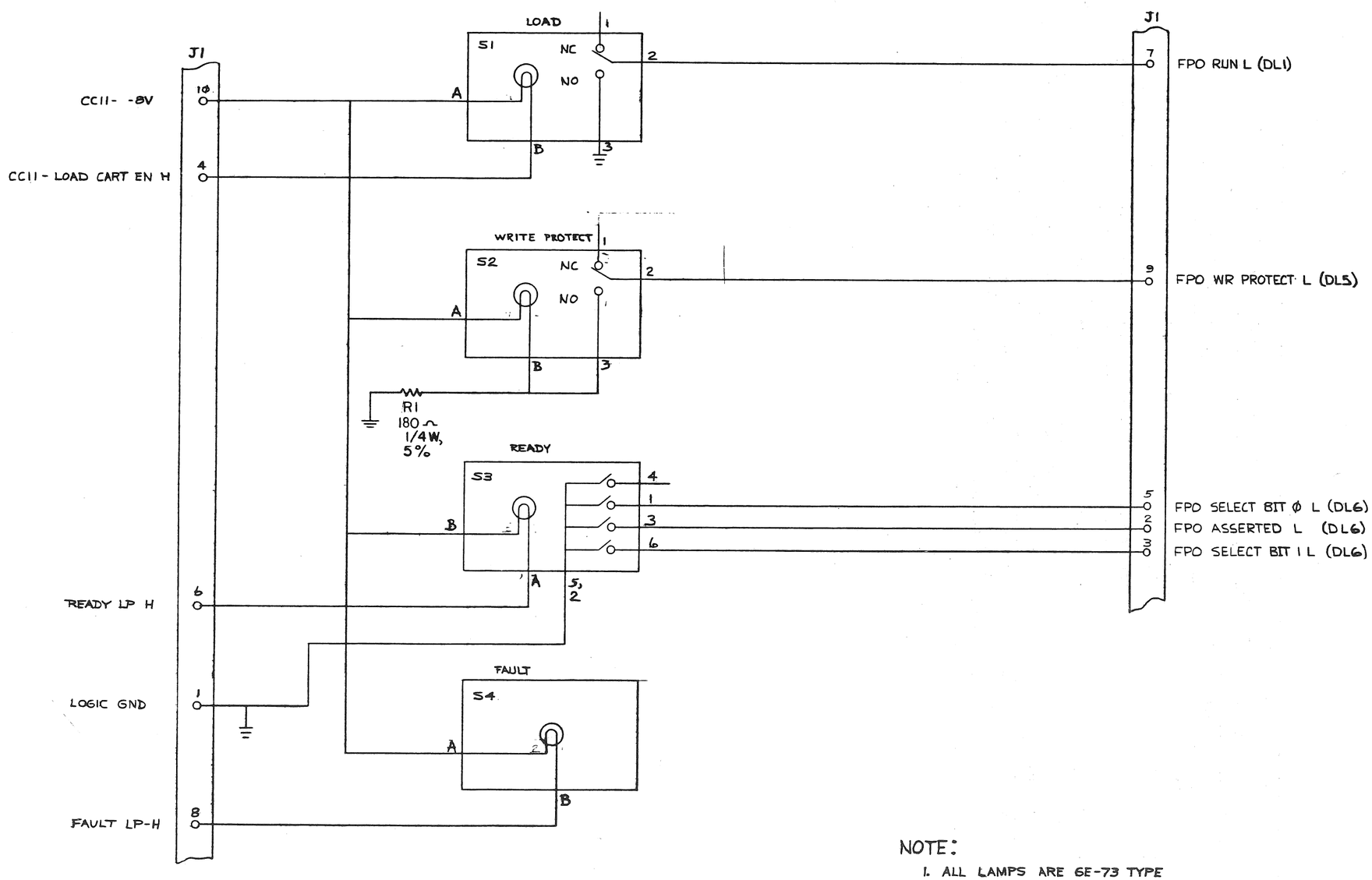

NOTE:

1. ALL LAMPS ARE 6E-73 TYPE

REVISIONS			
CHK	CHANGE NO.	REV.	
	5411846-0-01	E	
	5411846-02 G. REICHENBERG	F	
	5411846-03 M. ZARICH	H	
633	5411846-CX0005 D.C. 4 AUG 80 M. ZARICH	J	
635	5411846-CX0006 D.C. 3 OCT. 80 M. ZARICH	K	

DRN.		27 FEB 76
CHK'D		1-11-77
ENG.		3-7-77
PROJ. ENG.		3-10-77
PROD.		3-9-77
NEXT HIGHER ASSY.		
SCALE		
SHEET	1 OF 1	

FIRST USED ON

digital

TITLE

FRONT PANEL

SIZE	CODE	NUMBER	REV.
D	CS	5411846-0-1	K

DIST.

DEC FORM NO. DRD 102-0

COMPONENT SIDE VIEW

ACTUAL REF DESIGNATORS	SUPERFICIAL REF DESIGNATORS
C1,C2,C3,C4,C5,C6,C7	C101 , C102 , C103 , C104 , C105 , C106 , C107
D1,D2,D3,D4,D5,D6,D7	D101 , D102 , D103 , D104 , D105 , D106 , D107
D8,D9,D10,D11,D12,D13	D108 , D109 , D110 , D111 , D112 , D113
E1,E2,E3	E101 , E102 , E103
K1,K2,K3	K101 , K102 , K103
J1,J2,J3,J4,J5	J101 , J102 , J103 , J104 , J105
Q1,Q2,Q3,Q4,Q5,Q6	Q101 , Q102 , Q103 , Q104 , Q105 , Q106
R1,R2,R3,R4,R5,R6,R7	R101 , R102 , R103 , R104 , R105 , R106 , R107
R8,R9,R10,R11,R12,R13,R14	R108 , R109 , R110 , R111 , R112 , R113 , R114
R15,R16,R17,R18,R19,R20,R21,R22	R115 , R116 , R117 , R118 , R119 , R120 , R121 , R122

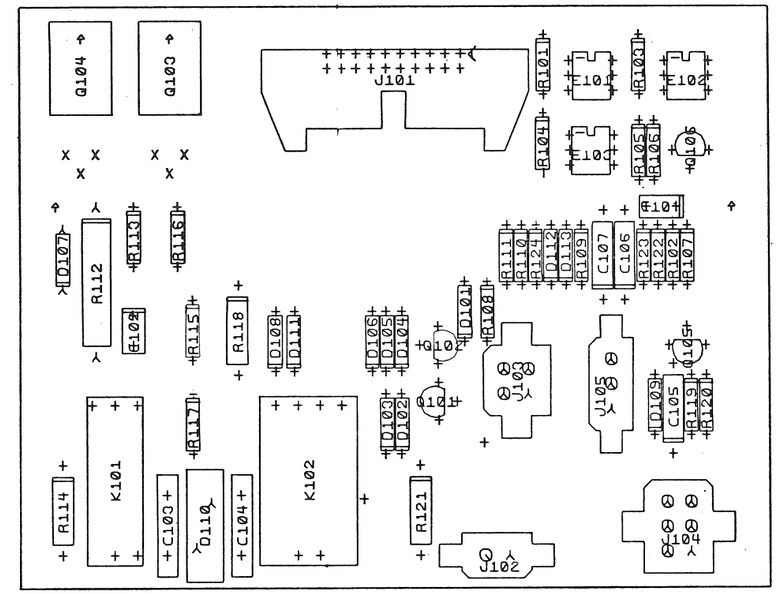

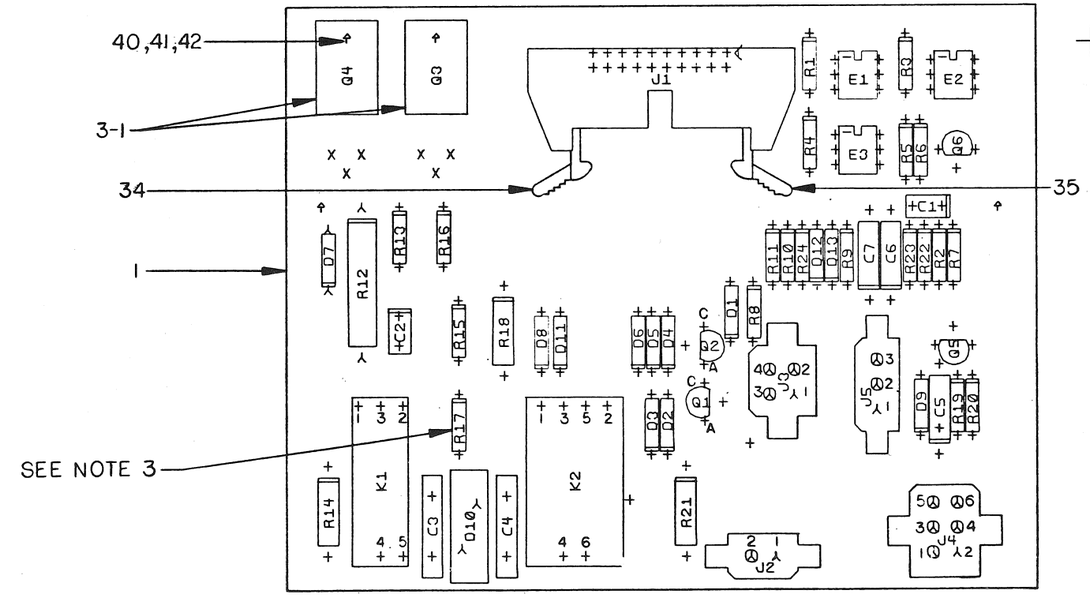

NOTES:

1. 8 HOLES .0465 (+.000-.0045) MAYNARD ONLY
2. U/L APPROVAL REQUIRED
3. REWORK INSTRUCTIONS:
   1. REMOVE R17 (330Ω, 1/4W, 5%)
   2. INSTALL R17 (330Ω, 1/2W, 5%)

STEP E	↑ Y AXIS _____ STEP ___ TIMES
REPEAT	→ X AXIS _____ STEP ___ TIMES

CHK	CHANGE NO	REV
	5411848-0001	D
	P. BURNELL	
TO-OG 77	G. RIECHENBERG	
W.M. 10 MAR 78	5411848-CX0002 P. BURNELL	E
W.M. 18 MAR 79	5411848-CZ0003 M ZARICH	F
	REDRAWN 5 JUNE 80	

ETCH REV. E-P2
P.C. DESIGN DATA BASE REV. E-P2

SIGNATURES	DATE
DRN. T. SHETRAWSKI	15-9-77
CHK'D. T. SHETRAWSKI	15-9-77
MECH.ENG. G. RIECHENBERG	26-9-77
PROJ.ENG. P. ARNOLD	26-9-77
PROD. R. STROTT	26-9-77
SCALE 2/1	
SHT. 1 OF 4	
NEXT HIGHER ASSY. B-DD-5411848-0	

digital

TITLE AC SERVO

SIZE	CODE	NUMBER	REV
D	UA	5411848-0-0	F

MS#260285

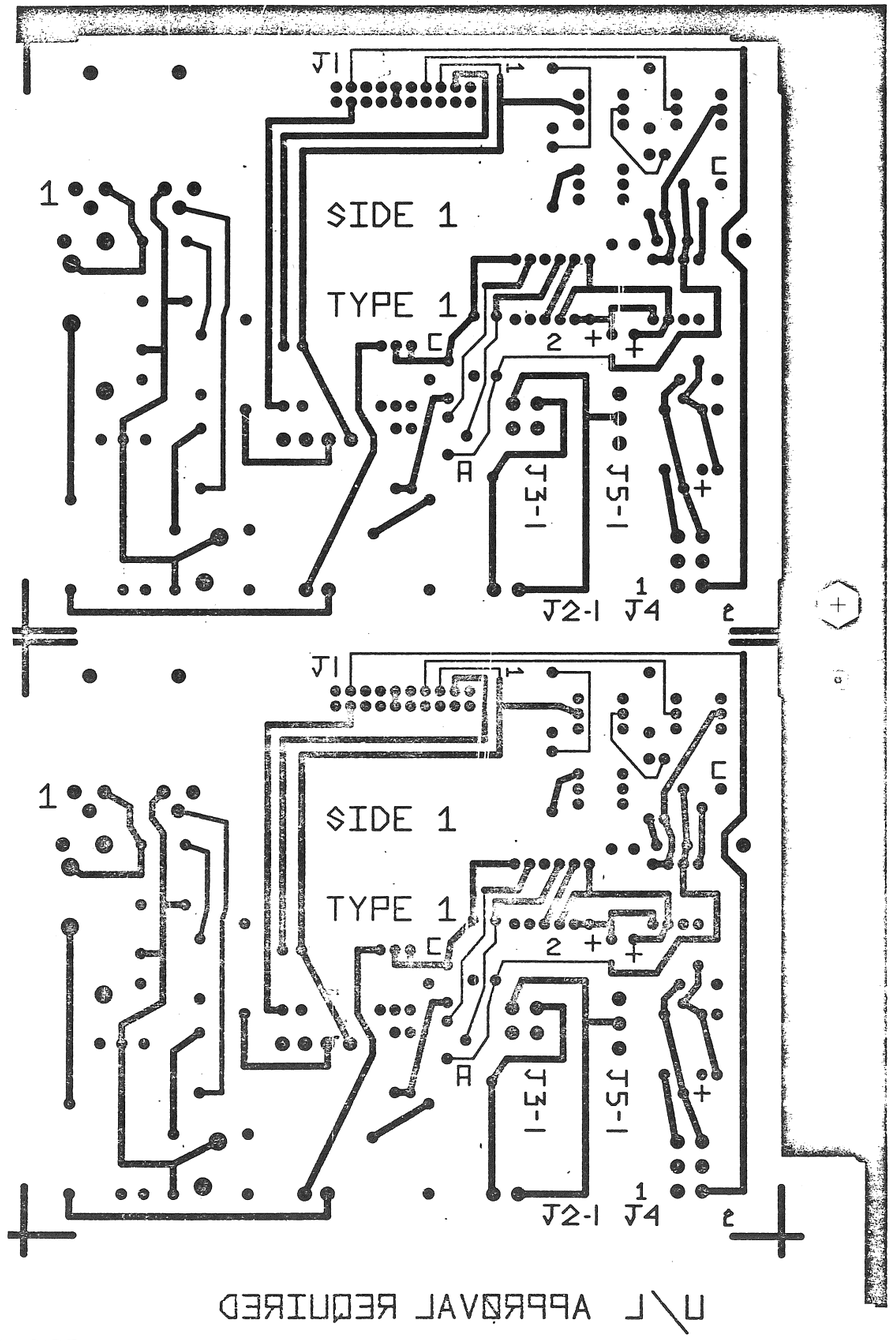

U/L APPROVAL REQUIRED

VIEWED FROM SIDE 1

REVISIONS		
CHK	CHANGE NO	REV

TITLE	SIZE	CODE	NUMBER	REV.
AC SERVO	D	UA	5411848 -0-0	F
SCALE 2:1	SHEET 2 OF 4			

DEC FORM NO DRD 137

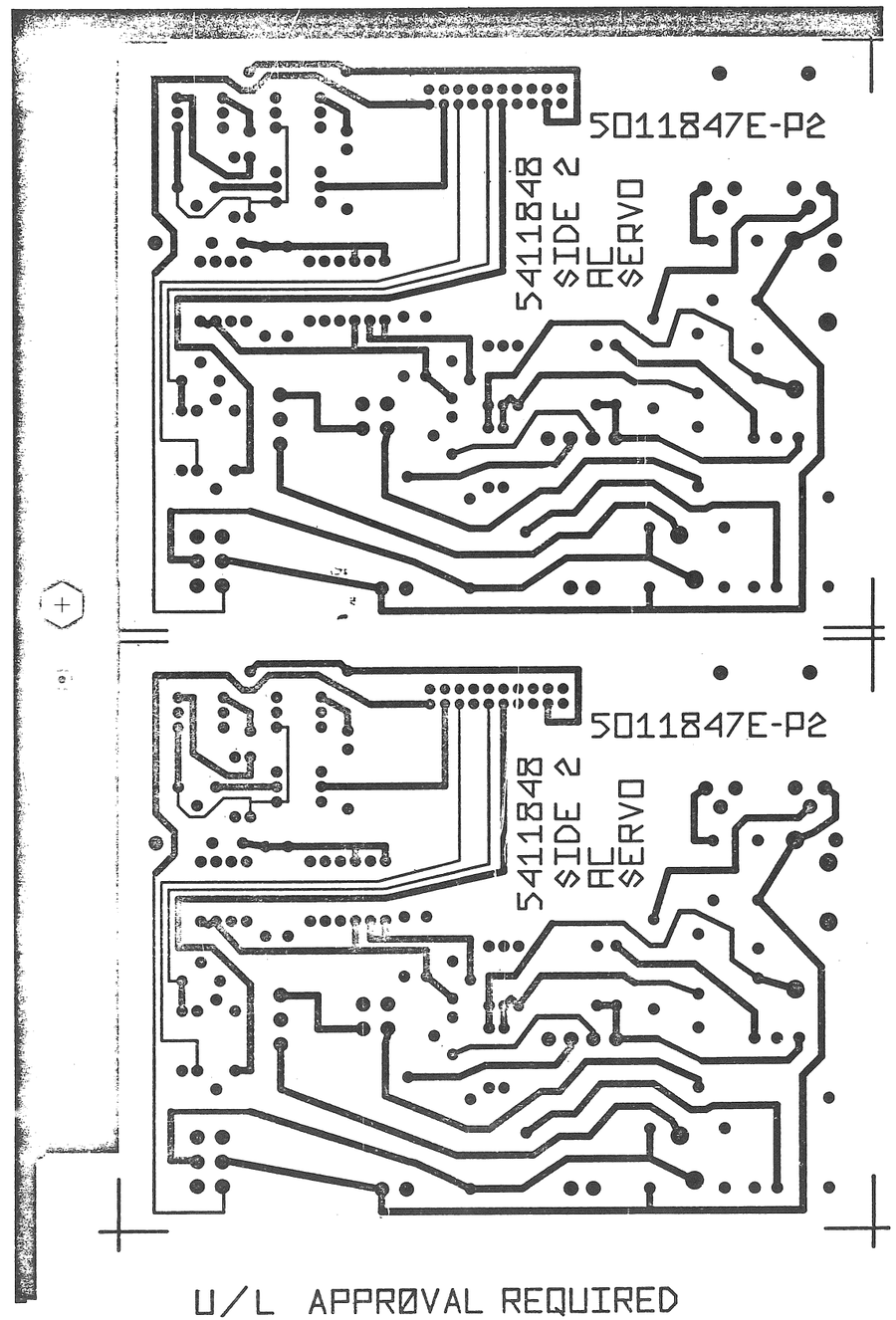

U/L APPRØVAL REQUIRED

VIEWED FROM SIDE 2

REVISIONS		
CHK	CHANGE NO	REV.

TITLE	SIZE	CODE	NUMBER	REV.
AC SERVO	D	UA	5411848 -0-0	F
SCALE 2:1 SHEET 3 OF 4	DIST.			

DEC FORM NO ORD 137

REWORK INSTRUCTIONS

3-1. CHANGE Q3 AND Q4 TO 1510070-00, ITEM 38.

REVISIONS		
CHK	CHANGE NO.	REV.

TITLE	SIZE	CODE	NUMBER	REV.
AC SERVO	D	UA	5411848-0-0	F
SCALE —	SHEET 4 OF 4	DIST.		

AUTOMATED BY PRTLST.3K(27) P A R T S L I S T SHEET A1 OF A2

LINE	ITEM	DOCUMENT NUMBER	PART NUMBER	DESCRIPTION	QTY PER VARIATION 00	REFERENCE DESIGNATOR
1	1	D-MD-5011847-0-0	5011847-00	ETCH CRKT BRD	1	
2	2		1011683-00	.022 MFD 50V 1% 67 CER.	1	C1
3	3		1012312-01	.47 MFD 50V X%	1	C2
4	4		1013682-00	.1 MFD 500V +80 -20% CER.	2	C3,C4
5	5		1001776-00	1 MFD 35V 10% S.TANT	2	C5,C7
6	6		1110856-00	1N 970B VZ= 24.0 5% .40W Y	1	D1
7	7		1111577-00	1N 4454 TR= 4NS PIV= 50 S	10	D2-D6,D8,D9,D11-D13
8	8		1105796-00	1N 4004 PIV=400 I= 1A D041 SP	1	D7
9	9		1510727-01	OPTO-COUPLED ISOLATOR	3	E1-E3
10	10		1213917-00	RLY,REED 5V COIL,DPDT	1	K2
11	11		1213915-00	RLY,REED, 5V COIL,SPDT	1	K1
12	12		1110997-00	VP 130A10 VOLT. SUPRESS.130VAC	1	D10
13	13		1209941-06	HEADER.100 20POS RT ANGLE	1	J1
14	14		1213922-00	HEADER 2POS	1	J2
15	15		1213922-01	HEADER 3POS	1	J5
16	16		1213922-03	HEADER 4POS	1	J3
17	17		1213922-04	HEADER 6POS	1	J4
18	18		1300315-00	470 1/2W 5% CC	2	R14,R21
19	19		1300271-00	220 1/4W 5% CC	3	R1,R3,R4
20	20		1311220-00	5.1 1/2W 5% CC	1	R18
21	21		1301327-00	68 K 1/4W 5% CC	1	R6
22	22		1302466-00	100 K 1/4W 5% CC	2	R5,R8
23	23		1300444-00	3.9 K 1/4W 5% CC	1	R20
24	24		1314516-00	200 K 1/4W 5% CC	2	R7,R23
25	25		1300496-00	15 K 1/4W 5% CC	1	R10
26	26		1300479-00	10 K 1/4W 5% CC	2	R11,R24
27	27		1300482-00	10 K 2W 10% CC	1	R12
28	28		1312927-00	16 1/4W 5% CC	2	R15,R16
29	29		1314649-00	430 K 1/4W 5% CC	1	R22

REVISION HISTORY				
ENG	ECO NUMBER	REV	SECTION A OF A	
	INITIAL	E	SECTION.VARIATION INDEX	
MZ	5411848-CZ003	F	[A] 00	
			[B]	
			[C]	
			[D]	
			[E]	
			[F]	
			[H]	
			[J]	
			[K]	
			[L]	
			[M]	
			[N]	

BASIC PART NO: 5411848

DRN: H. RICHER — DATE: 23 MAR 76

CHK'D: P. BURNELL — DATE: 10 JAN 77

DES.ENG: P. BADUM — DATE: 7 JUN 77

RESP.ENG.: P. BADUM — DATE: 7 JUN 77

MFG.ENG.: D. LESAGE — DATE: 7 JUN 77

ASSEMBLY NUMBER: D-UA-5411848-0-0

D	I	G	I	T	A	L

TITLE: PARTS LIST — AC SERVO

DOCUMENT NUMBER			
SIZE	CODE	NUMBER	REV
K	PL	5411848-0-DBP	F

FILE NAME: Z0491.PLS — EDIT # 3

AUTOMATED BY PRTLST.3K(27) P A R T S L I S T SHEET A2 OF A2

LINE	ITEM	DOCUMENT NUMBER	PART NUMBER	DESCRIPTION	QTY PER VARIATION 00	REFERENCE DESIGNATOR
30	30		1300296-00	330 1/2W 5% CC	1	R17
31	31		1302388-00	2 K 1/4W 5% CC	1	R13
32	32		1309595-00	1 M 1/4W 5% CC	1	R9
33	33		1303176-00	1.6 K 1/4W 5%	1	R19
34	34		1209941-03	HEADER RT ANGLE LEFT L	1	J1
35	35		1209941-04	HEADER RT ANGLE,RIGHT	1	J1
36	36		1510877-00	2N 6028 UJT 300MW R67B	2	Q1,Q6
37	37		1110968-00	2N 5062 SCR@100V I=.8A T092	1	Q2
38	38		1510070-00	TRIAC@400V,I> 8A #RCA40669 M	2	Q3,Q4
39	39		1513489-00	2N 4401 NPN 350MW SI 40 20	1	Q5
40	40		9006557-00	NUT,KEP , 4-40X 1/4 AF	2	Q3,Q4
41	41		9006010-01	SCREW,PAN ,PHIL, 4-40X 5/16	2	Q3,Q4
42	42		9006655-00	WASHER, FLAT, .312 O.D. X .125 I	2	Q3,Q4
43	43			*** THIS ITEM IS NOT USED ***	-	
44	44		1000002-04	.33 MFD 35V 10% .150D S.TA	1	C6
45	45		1314650-00	91 K 1/4W 5% CC	1	R2

D	I	G	I	T	A	L

TITLE: AC SERVO — SECTION A OF A

SIZE	CODE	DOCUMENT NUMBER	REV
K	PL	5411848-0-DBP	F

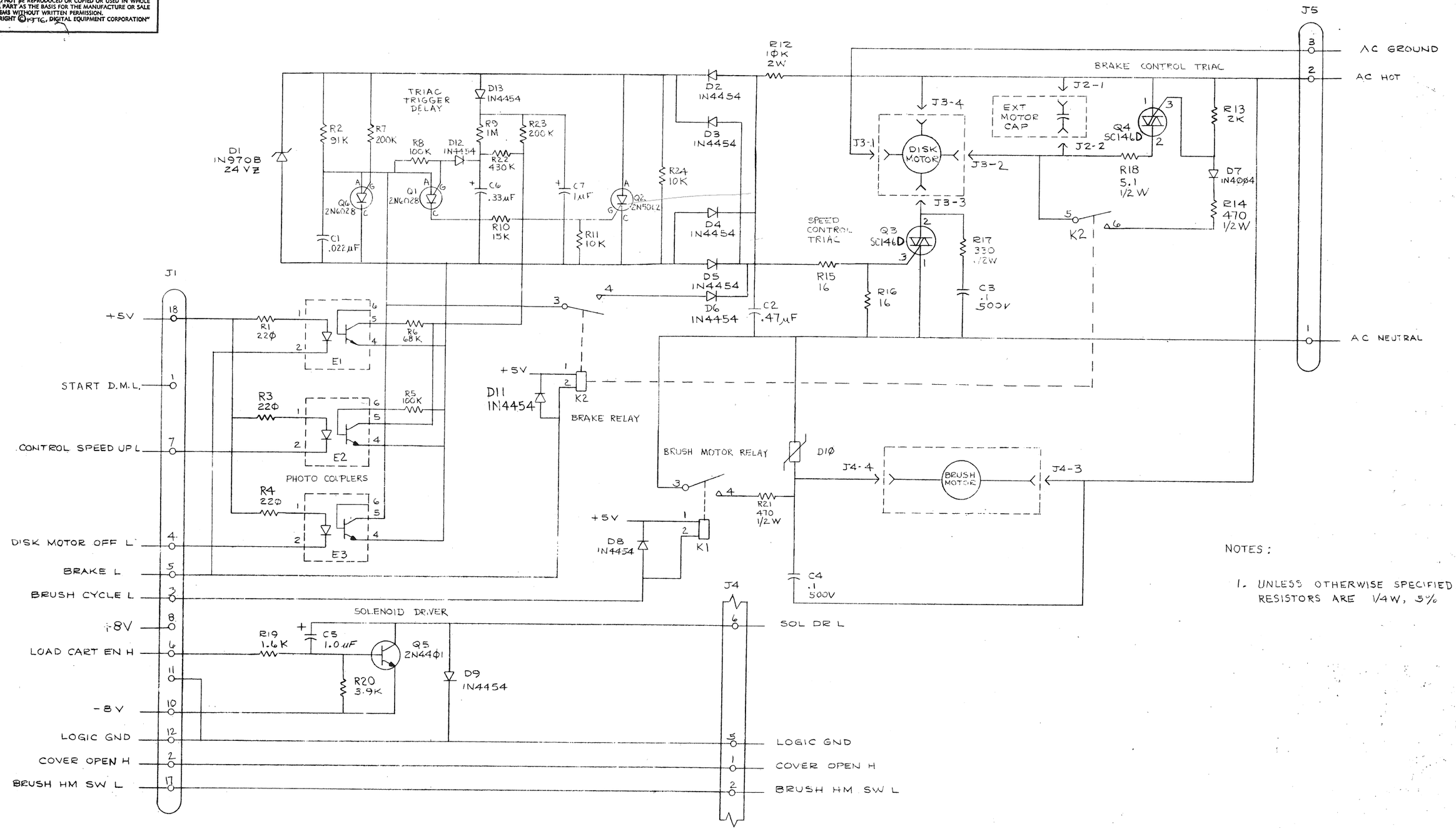

NOTES:

1. UNLESS OTHERWISE SPECIFIED: RESISTORS ARE 1/4W, 5%

REVISIONS			
CHK	CHANGE NO.		REV.
CB	RELEASED AT REV C. EQUAL TO C1 PLUS FIELD SERVICE ANNOTATION		C
CB	5411848-0001		A
	PHYLLIS BURNELL		
	G. REICHENBERG		
	5411848-CX002 P. BURNELL		C1
	5411848-CZ003 M. ZARICH		E

DRN.	3/16/76	FIRST USED ON	RL01
CHK'D	1-14-77	TITLE	AC SERVO
ENG.	6-8-77		
PROJ. ENG.	6/7/77		
PROD.	6/7/77		
NEXT HIGHER ASSY.			
D-UA-5411848-0-0		SIZE D	CODE CS
SCALE	1 / 1	NUMBER	5411848-0-1
SHEET 1 OF 1		DIST.	REV. E

digital

SIZE D CODE CS NUMBER 5411848-0-1 REV. E

COMPONENT SIDE VIEW

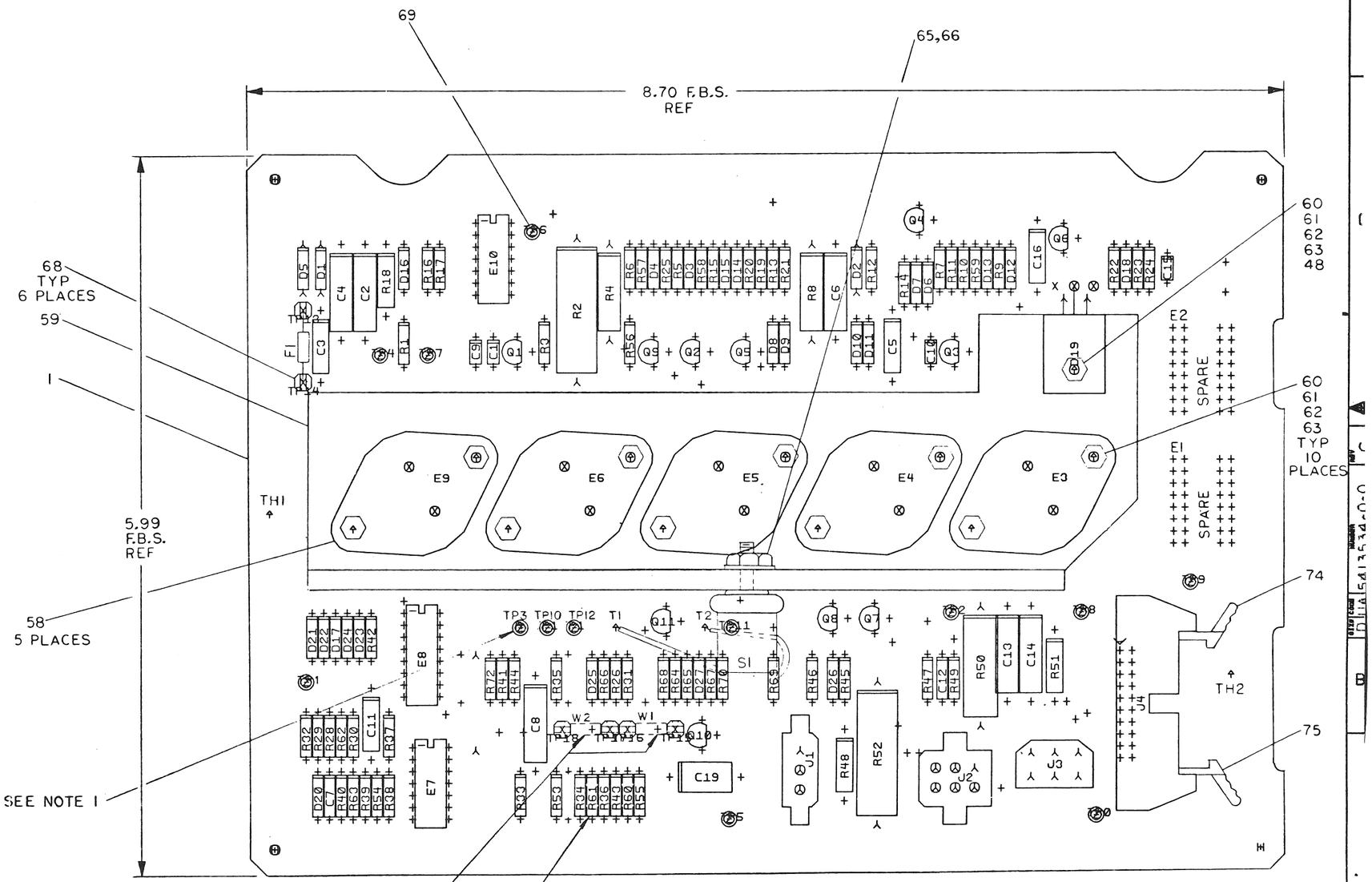

NOTES:

1. TP3, TP11, TP12 & TP15 THRU TP18 TO BE MOUNTED ON SIDE 2.
2. R60 AND R61 ARE TO BE INSTALLED AFTER FINAL TEST.
3. INSTALL W1 AND W2 FOR RL01. INSTALL W2 ONLY FOR RL02. W1 & W2 ARE LOCATED ON SIDE 2.

CHK	CHANGE NO	REV
	5413534-C0001 BOB NOGUCHI	B
	5413534-C X02A M. ZARICH	C

ETCH REV. B
P.C. DESIGN DATA BASE REV. BL

SIGNATURES	DATE
DRN.	
CHK'D.	
ENG.	
PROJ. ENG.	
PROD.	
SCALE 2/1	
SHT. 1 OF 1	
NEXT HIGHER ASSY. B-CD-5413534-0	

digital

TITLE DC SERVO & POWER SUPPLY

SIZE	CODE	NUMBER	REV
D	UA	5413534-0-0	C

MS# 291-021

AUTOMATED BY PRTLST.2E(2) — P A R T S L I S T — SHEET A1 OF A3

LINE	ITEM	DOCUMENT NUMBER	PART NUMBER	DESCRIPTION	QTY PER VARIATION 00	REFERENCE DESIGNATOR
1	1	D-MD-5013533-0-0	5013533-00	ETCHED CIRCUIT BOARD	1	
2	2		1013466-08	680.0 MMF 50V 10% CER.	1	C12
3	3		1016009-00	2200 MMF 50V 5% CER.	1	C7
4	4		1001610-00	.01 MFD 50V -20+80 Z5U AXIAL	4	C1,C9,C10,C15
5	5		1002630-00	.015 MFD 100V 10% 663UW MYLR	1	C8
6	6		1013466-11	.22 MFD 50V +80/-20% CER.	4	C3,C5,C11,C16
7	7		1005306-00	6.8MFD 35V 10% S.TANT	4	C4,C6,C13,C14
8	8		1000076-00	39 MFD 10V 10% 150D S.TA	1	C2
9	9		1309422-00	5.1 1/4W 5% CC	1	R58
10	10		1312929-00	62 1/4W 5% CC	2	R3,R23
11	11		1311523-00	110 1/4W 5% CC	1	R22
12	12		1300247-00	120 1/4W 5% CC	1	R13
13	13		1300271-00	220 1/4W 5% CC	1	R59
14	14		1301425-00	300 1/4W 5% CC	1	R55
15	15		1303178-00	620 1/4W 5% CC	1	R6
16	16		1300365-00	1 K 1/4W 5% CC	5	R1,R7,R39,R44,R57
17	17		1300391-00	1.5 K 1/4W 5% CC	1	R5
18	18		1302388-00	2 K 1/4W 5% CC	2	R31,R43
19	19		1300426-00	2.7 K 1/4W 5% CC	2	R46,R47
20	20		1302389-00	4.3 K 1/4W 5% CC	1	R53
21	21		1300447-00	4.7 K 1/4W 5% CC	10	R10-R12,R14,R15,R19,R20,R24,R49,
					CONT	R68
22	22		1303179-00	8.2 K 1/4W 5% CC	3	R9,R16,R17
23	23		1300488-00	12 K 1/4W 5% CC	4	R25,R26,R45,R56
24	24		1305346-00	27 K 1/4W 5% CC	1	R21
25	25		1305131-00	*** THIS ITEM IS NOT USED ***	-	
26	26		1312923-00	2.10 K 1/4W 1% RN55D-F 100PPM	1	R41
27	27		1305114-00	3.48 K 1/4W 1% RN55D-F 100PPM	1	R34
28	28		1314763-00	4.12 K 1/4W 1% RN55D-F 100PPM	1	R36
29	29		1303312-00	10.0 K 1/4W 1% RN55D-F 100PPM	3	R28,R29,R62

REVISION HISTORY			BASIC PART NO: 5413534		
ENG	ECO NUMBER	REV	SECTION A OF A	DRN: JERRY BEST	DATE: 26-JUL-78
---	INIT	A	SECTION.VARIATION INDEX	CHK'D: JERRY BEST	DATE: 26-JUL-78
BN	5413534-CZ001	B	[A] 00		
			[B]		
			[C]	DES.ENG: R. NOGUCHI	DATE:
			[D]		
			[E]		
			[F]	RESP.ENG.: R. NOGUCHI	DATE: 26-JUL-78
			[H]		
			[J]		
			[K]	MFG.ENG.: P. CHURCH	DATE:
			[L]		
			[M]	ASSEMBLY NUMBER:	TOP DOCUMENT NUMBER:
			[N]	D-UA-5413534-0-0	RL02

D	I	G	I	T	A	L

TITLE: PARTS LIST — D.C. SERVO AND POWER SUPPLY

DOCUMENT NUMBER: SIZE K, CODE PL, NUMBER 5413534-0-DBP, REV B

FILE NAME: Z0494B.PLS, EDIT # 13

AUTOMATED BY PRTLST.2E(2) — P A R T S L I S T — SHEET A2 OF A3

LINE	ITEM	DOCUMENT NUMBER	PART NUMBER	DESCRIPTION	QTY PER VARIATION 00	REFERENCE DESIGNATOR
30	30		1312924-00	10.7 K 1/4W 1% RN55D-F 100PPM	1	R32
31	31		1309412-00	18.2 K 1/4W 1% RN55D-F 100PPM	1	R33
32	32		1315436-00	52.3 K 1% RN55D-F 100PPM	1	R54
33	33		1304843-00	243 K 1/4W 1% RN55D-F 100PPM	1	R72
34	34		1315437-00	237 K 1% RN55D-F 100PPM	1	R38
35	35		1302378-00	51 1/2W 5% CC	1	R51
36	36		1300364-00	1 K 1/2W 5% CC	2	R18,R48
37	37		1314068-00	360 1W 5% CC	1	R4
38	38		1300368-00	1 K 1W 5% CC	1	R8
39	39		1301494-00	200 2W 5% CC	1	R50
40	40		1313358-00	.2 5W 3% WW	2	R2,R52
41	41		1105796-00	1N 4004 PIV=400 I= 1A D041 SP	3	D1,D2,D5
42	42		1113953-00	1N 5523D VZ= 5.1 1%	8	D4,D6,D8,D9,D16,D18,D21,D22
43	43		1109990-00	1N 757A VZ= 9.1 5% .40W P	2	D23,D24
44	44		1110994-00	1N 751A VZ= 5.1 5% .40W	1	D14
45	45		1114117-00	1N 4152 PIV=450 I=75M	6	D3,D7,D10,D11,D12,D13
46	46		1111577-00	1N 4454 TR= 4NS PIV= 50 S	6	D15,D17,D20,D25-D27
47	47		1513698-00	TRIAC@200V,I>14A	1	D19
48	48		9009597-00	INSULATOR, THERMA-FILM $	1	
49	49		1513489-00	2N 4401 NPN 350MW SI 40 20	4	Q2,Q4,Q8,Q9
50	50		1513490-00	2N 4403 PNP 350MW SI-40 30	6	Q1,Q3,Q5-Q7,Q11
51	51		1511282-00	MJ2500 PNP 150WC SI 60 5 1K 5A	2	E4,E6
52	52		1511349-00	TIP 640 (OR MJ3000) NPN DARLINGT	1	E3
53	53		1911706-00	5012 ANALOG SWITCH,4CHNL	1	E8
54	54		1912818-00	LS38 NAND BUFFER-QUAD 2IN	1	E10
55	55		1912107-01	324ANOP AMP,QUAD	1	E7
56	56		1913695-00	7808 VOLT.REG.FIX +	1	E9
57	57		1913694-00	7908 VOLT.REG.FIX -	1	E5
58	58		9008419-00	WASHER, FLAT, THERMAFILM .002THK	5	
59	59		7418595-00	HEATSINK ASSEMBLY	1	
60	60		9008033-01	SCREW,PAN ,PHIL, 4-40X 9/16	11	
61	61		9006557-00	NUT,KEP , 4-40X 1/4 AF	11	
62	62		9006655-00	WASHER, FLAT, .312 O.D. X .125 I	11	
63	63		9008268-00	COMPOUND, THERMAL JOINT $	A/R	
64	64		1210824-00	THERMOSTAT,O@215,C@156,SPST	1	S1
65	65		9008185-00	NUT,KEP , 6-32X1/4 AF	1	
66	66		9006653-00	WASHER, FLAT, .375 O.D. X .156 I	1	
67	67		1205747-00	FUSE, SUB-MINI, 5.000A, 125V, A	1	F1
68	68		9006735-00	EYELET, FUNNEL FLANGE, .059 OD X	6	TP13-TP18
69	69		9007791-00	TERM PCB 2POS SOLDER,TURRET	13	TP0-TP12
70	70		1213922-01	HEADER 3POS	1	J1
71	71		1213922-04	HEADER 6POS	1	J2
72	72		1213900-00	CONN,RCPT 6PIN	1	J3
73	73		1209941-06	HEADER.100 20POS RT ANGLE	1	J4
74	74		1209941-04	HEADER RT ANGLE,RIGHT	1	
75	75		1209941-03	HEADER RT ANGLE LEFT L	1	
76	76		1305324-00	4.99 K 1/4W 1% RN55D-F 100PPM	2	R37,R30
77	77		1300250-00	150 1/4W 5% CC	1	R42

D	I	G	I	T	A	L

TITLE: D.C. SERVO AND POWER SUPPLY — SECTION A OF A

SIZE K, CODE PL, DOCUMENT NUMBER 5413534-0-DBP, REV B

AUTOMATED BY PRTLST.2E(2)

P A R T S L I S T

LINE	ITEM	DOCUMENT NUMBER	PART NUMBER	DESCRIPTION	QTY PER VARIATION 00	REFERENCE DESIGNATOR
78	78		1312618-00	16.9 K 1/4W 1% RN55D-F 100PPM	1	R40
79	79		1300229-00	100 1/4W 5% CC	1	R63
80	80		1305336-00	*** THIS ITEM IS NOT USED ***	-	
81	81		1309416-00	31.6 K 1/4W 1% RN55D-F 100PPM	1	R65
82	82		1015574-01	*** THIS ITEM IS NOT USED ***	-	
83	83		9009185-00	JUMPER, WIRE, INSULATED, BLACK B	2	W1,W2
84	84		1303044-00	100 K 1/4W 1% RN55D-F 100PPM	1	R64
85	85		1015574-00	*** THIS ITEM IS NOT USED ***	-	
86	86		1315435-00	25.5 K 1/4W 1% RN55D-F 100PPM	1	R66
87	87		1312930-00	5.1 K 1/4W 5% CC	1	R67
88	88		1015520-00	1 MFD 100V 5% M.POLYESTER	1	C19
89	89		1513697-00	2N 5640 FET N CHNNL	1	Q10
90	90		1300479-00	10 K 1/4W 5% CC	1	R69
91	91		1302466-00	100 K 1/4W 5% CC	1	R70

DIGITAL	TITLE	SECTION A OF A	SIZE	CODE	DOCUMENT NUMBER	REV
	D.C. SERVO AND POWER SUPPLY		K	PL	5413534-0-DBP	B

COMPONENT SIDE VIEW

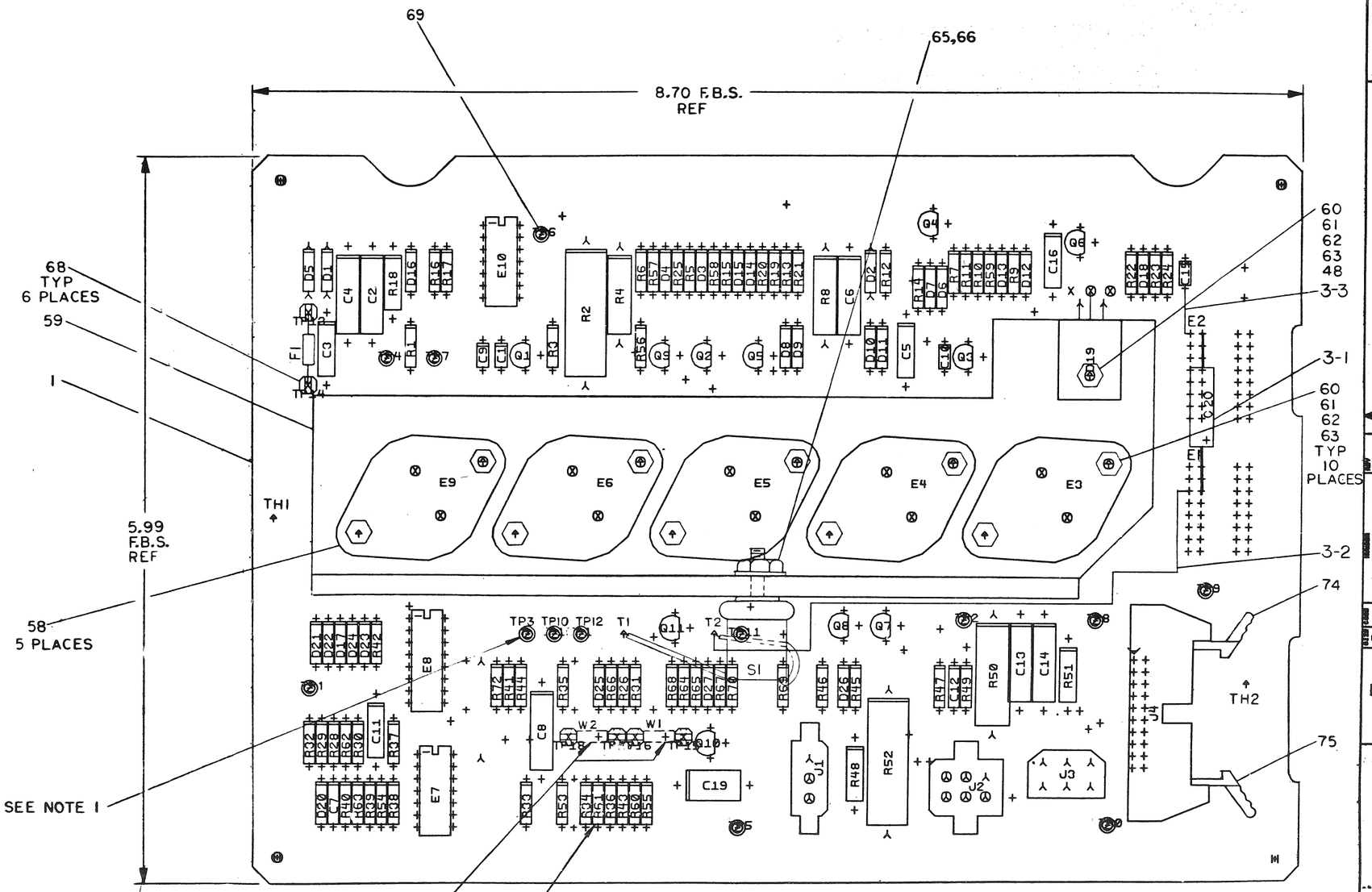

NOTES:

1. TP3, TP11, TP12 & TP15 THRU TP18 TO BE MOUNTED ON SIDE 2.
2. R60 AND R61 ARE TO BE INSTALLED AFTER FINAL TEST.
3. INSTALL W1 AND W2 FOR RLØ1. INSTALL W2 ONLY FOR RLØ2. W1 & W2 ARE LOCATED ON SIDE 2.

REV	CHANGE NO	CHK
B	5413534-C001 BOB NOGUCHI	
C	5413534-CXØ2A M. ZARICH	
D	5413534-CXØØ3 M. ZARICH	

ETCH REV. B
P.C. DESIGN DATA BASE REV. BL

SIGNATURES	DATE
DRN. Paul R. Kendrick	8/15/78
CHK'D.	8/15/78
ENG.	8/15/78
PROJ. ENG.	
PROD.	8/27/78

digital

TITLE DC SERVO & POWER SUPPLY

SCALE 2/1
SHT. 1 OF 2
SIZE D | CODE UA | NUMBER 5413534-0-0 | REV D
NEXT HIGHER ASSY. B-DD-5413534-0

1 MS#291-021

REWORK INSTRUCTIONS:

ECO 5413534-CX003

COMPONENT ADDS SIDE 1:

3-1 ADD POLARIZED SIDE OF C20 (1002781-00) AT E1-3 AND THE GND SIDE AT E2-1.

WIRE ADDS SIDE 1:

3-2 ADD WIRE FROM THE PTH NEXT TO E1-3 TO T2.

3-3 ADD WIRE FROM THE PTH NEXT TO E2-1 TO C15 GND (BOTTOM).

REVISION HISTORY		
DATE	ECO NUMBER	REV.

TITLE DC SERVO AND POWER SUPPLY

DOCUMENT NUMBER			
SIZE	CODE	NUMBER	REV.
D	UA	5413534-0-0	D

SCALE —//— SHEET 2 OF 2

DRD 137A

SIZE	CODE	NUMBER	REV.
B	DD	5413534-0	D

DRAWING NO.	NO. OF SHTS.	PART NO.	DESCRIPTION	A (*)	B (10 APR 79)	C (23 MAY 80)	D (16 NOV 80)	E (17 JUNE 81)
D-UA-5413534-0-0	2		D.C. SERVO AND POWER SUPPLY	A	B	C	D	E
D-CS-5413534-0-1	2		D.C. SERVO AND POWER SUPPLY	A	B	C	D	E
D-MD-5013533-0-0	4		DRILL & ETCH DRAWING	A	A	A	A	A
		5013533	ETCHED BOARD	B	B	B	B	A
K-PC-5413534-0-DBC	-		P.C. DESIGN DATA BASE	A	A	A	A	A
K-PL-5413534-0-DBP	-		INSERTION PARTS LIST DATA BASE	A	B	B	C	D
D-EC-5013533-0-0	2		ETCH CUT DRAWING	—	—	A	A	A

REVISIONS

RPM 13 MAY 80; RPM 16 NOV 80; REV 17 JUNE 81

NOTES:

REV.	CHG NO.	DATE
*		7/20/78
A	5413534-2 Z0001	10 APR 79
B	5413534-CX002A	23 MAY 80
C	5413534-CX0003	16 NOV 80
D	5413534-CX0004	17 JUNE 81

digital

USED ON OPTION/MODEL: RL02

DRN	N. Costa	4/18/78
CHK'D	HK	4/18/78
ENG.	Robert M. Noguchi	8/11/78
PROD.	P CHURCH Pearson	9/27/78

TITLE: D.C. SERVO AND POWER SUPPLY

SIZE	CODE	NUMBER	REV.
B	DD	5413534-0	D

SHEET 1 OF 1

DRB 126

AUTOMATED BY PRTLST.2E(2) — P A R T S L I S T — SHEET A1 OF A3

LINE	ITEM	DOCUMENT NUMBER	PART NUMBER	DESCRIPTION	QTY PER VARIATION 00	REFERENCE DESIGNATOR
1	1	D-MD-5013533-0-0	5013533-00	ETCHED CIRCUIT BOARD	1	
2	2		1013466-08	680.0 MMF 50V 10% X7R CER	1	C12
3	3		1016009-00	2200.0 MMF 50V 5% CER	1	C7
4	4		1001610-00	.01 MFD 50V +80-20% Z5U CER	4	C1,C9,C10,C15
5	5		1002630-00	.015 MFD 100V 10% MYLR	1	C8
6	6		1013466-11	.22 MFD 50V +80-20% Z5U CER	4	C3,C5,C11,C16
7	7		1005306-00	6.8MFD 35V 10% S.TANT	4	C4,C6,C13,C14
8	8		1000076-00	39 MFD 10V 10% S.TANT	1	C2
9	9		1309422-00	5.10 .25 W 5.0 % CC	1	R58
10	10		1312929-00	62.0 .25 W 5.0 % CC	2	R3,R23
11	11		1311523-00	110.0 .25 W 5.0 % CC	1	R22
12	12		1300247-00	120.0 .25 W 5.0 % CC	1	R13
13	13		1300271-00	220.0 .25 W 5.0 % CC	1	R59
14	14		1301425-00	300.0 .25 W 5.0 % CC	1	R55
15	15		1303178-00	620.0 .25 W 5.0 % CC	1	R6
16	16		1300365-00	1.0 K .25 W 5.0 % CC	5	R1,R7,R39,R44,R57
17	17		1300391-00	1.50 K .25 W 5.0 % CC	1	R5
18	18		1302388-00	2.0 K .25 W 5.0 % CC	2	R31,R43
19	19		1300426-00	2.70 K .25 W 5.0 % CC	2	R46,R47
20	20		1302389-00	4.30 K .25 W 5.0 % CC	1	R53
21	21		1300447-00	4.70 K .25 W 5.0 % CC	10	R10-R12,R14,R15,R19,R20,R24,R49,
					CONT	R68
22	22		1303179-00	8.20 K .25 W 5.0 % CC	3	R9,R16,R17
23	23		1300488-00	12.0 K .25 W 5.0 % CC	4	R25,R26,R45,R56
24	24		1305346-00	27.0 K .25 W 5.0 % CC	1	R21
25	25		1305131-00	*** THIS ITEM IS NOT USED ***	-	
26	26		1312923-00	2.10 K .25 W 1.0 % RN55D-F10	1	R41
27	27		1305114-00	3.48 K .25 W 1.0 % RN55D-F10	1	R34
28	28		1314763-00	4.12 K .25 W 1.0 % RN55D-F10	1	R36
29	29		1303312-00	10.0 K .25 W 1.0 % RN55D-F10	3	R28,R29,R62

REVISION HISTORY			
ENG	ECO NUMBER	REV	
	INIT	A	
BN	5413534-CZ001	B	
MZ	5413534-CX003	C	

RPM 10 OCT 80 MZ

BASIC PART NO: 5413534
SECTION A OF A
SECTION.VARIATION INDEX
[A] 00
[B]
[C]
[D]
[E]
[F]
[H]
[J]
[K]
[L]
[M]
[N]

DRN: JERRY BEST — DATE: 26-JUL-78
CHK'D: JERRY BEST — DATE: 26-JUL-78
DES.ENG: R. NOGUCHI — DATE:
RESP.ENG.: R. NOGUCHI — DATE: 26-JUL-78
MFG.ENG.: P. CHURCH — DATE:
ASSEMBLY NUMBER: D-UA-5413534-0-0
TOP DOCUMENT NUMBER: RL02

TITLE: D.C. SERVO AND POWER SUPPLY — PARTS LIST
DOCUMENT NUMBER: SIZE K, CODE PL, NUMBER 5413534-0-DBP, REV C
FILE NAME: Z0494C.PLS
EDIT # 18

AUTOMATED BY PRTLST.2E(2) — P A R T S L I S T — SHEET A2 OF A3

LINE	ITEM	DOCUMENT NUMBER	PART NUMBER	DESCRIPTION	QTY PER VARIATION 00	REFERENCE DESIGNATOR
30	30		1312924-00	10.70 K .25 W 1.0 % RN55D-F10	1	R32
31	31		1309412-00	18.20 K .25 W 1.0 % RN55D-F10	1	R33
32	32		1315436-00	52.30 K .25 W 1.0 % RN55D-F10	1	R54
33	33		1304843-00	243.0 K .25 W 1.0 % RN55D-F10	1	R72
34	34		1315437-00	237.0 K .25 W .10% RN55D-F10	1	R38
35	35		1302378-00	51.0 .50 W 5.0 % CC	1	R51
36	36		1300364-00	1.0 K .50 W 5.0 % CC	2	R18,R48
37	37		1314068-00	360.0 1.0 W 5.0 % CC	1	R4
38	38		1300368-00	1.0 K 1.0 W 5.0 % CC	1	R8
39	39		1301494-00	200.0 2.0 W 5.0 % CC	1	R50
40	40		1313358-00	.20 5.0 W 3.0 % WW	2	R2,R52
41	41		1105796-00	1N 4004 PIV=400 I= 1A D041 SP	3	D1,D2,D5
42	42		1113953-00	1N 5523D VZ= 5.1 1%	8	D4,D6,D8,D9,D16,D18,D21,D22
43	43		1109990-00	1N 757A VZ= 9.1 5% .40W P	2	D23,D24
44	44		1110994-00	1N 751A VZ= 5.1 5% .40W	1	D14
45	45		1114117-00	1N 4152 PIV=450 I=75M	6	D3,D7,D10,D11,D12,D13
46	46		1111577-00	1N 4454 TR= 4NS PIV= 50 S	6	D15,D17,D20,D25-D27
47	47		1513698-00	TRIAC@200V,I>14A	1	D19
48	48		9009597-00	INSULATOR, THERMA-FILM	1	
49	49		1513489-00	2N 4401 NPN 350MW SI 40 20	4	Q2,Q4,Q8,Q9
50	50		1513490-00	2N 4403 PNP 350MW SI-40 30	6	Q1,Q3,Q5-Q7,Q11
51	51		1511282-00	MJ2500 PNP 150WC SI 60 5 1K 5A	2	E4,E6
52	52		1511349-00	TIP 640 (OR MJ3000) NPN DARLINGT	1	E3
53	53		1911706-00	5012 ANALOG SWITCH,4CHNL	1	E8
54	54		1912818-00	LS38 NAND BUFFER-QUAD 2IN	1	E10
55	55		1912107-01	324ANOP AMP,QUAD	1	E7
56	56		1913695-00	7808 VOLT REG,FIX +8V	1	E9
57	57		1913694-00	7908 VOLT REG,FIX -8V	1	E5
58	58		9008419-00	WASHER, FLAT, THERMAFILM .002THK	5	
59	59		7418595-00	HEATSINK ASSEMBLY	1	
60	60		9008033-01	SCREW,PAN,PHIL 4-40X 9/16 SS	11	
61	61		9006557-00	NUT,KEP , 4-40X 1/4 AF	11	
62	62		9006655-00	WASHER, FLAT, .312 O.D. X .125 I	11	
63	63		9008268-00	COMPOUND, THERMAL JOINT	A/R	
64	64		1210824-00	THERMOSTAT,0@215,C@156,SPST,NORM	1	S1
65	65		9008185-00	NUT,KEP , 6-32X1/4 AF	1	
66	66		9006653-00	WASHER, FLAT, .375 O.D. X .156 I	1	
67	67		1205747-00	FUSE, SUB-MINI, 5.000A, 125V, A	1	F1
68	68		9006735-00	EYELET, FUNNEL FLANGE, .059 OD X	6	TP13-TP18
69	69		9007791-00	TERM PCB 2POS SOLDER,TURRET	13	TP0-TP12
70	70		1213922-01	HEADER 3POS	1	J1
71	71		1213922-04	HEADER 6POS	1	J2
72	72		1213900-00	CONN,RCPT 6POS	1	J3
73	73		1209941-06	HEADER,100 20POS RT ANGLE	1	J4
74	74		1209941-04	HEADER RT ANGLE,RIGHT	1	
75	75		1209941-03	HEADER RT ANGLE LEFT L	1	
76	76		1305324-00	4.99 K .25 W 1.0 % RN55D-F10	2	R37,R30
77	77		1300250-00	150.0 .25 W 5.0 % CC	1	R42

TITLE: D.C. SERVO AND POWER SUPPLY — SECTION A OF A
DOCUMENT NUMBER: SIZE K, CODE PL, 5413534-0-DBP, REV C

LINE	ITEM	DOCUMENT NUMBER	PART NUMBER	DESCRIPTION	QTY PER VARIATION 00	REFERENCE DESIGNATOR
78	78		1312618-00	16.90 K .25 W 1.0 % RN55D-F10	1	R40
79	79		1300229-00	100.0 .25 W 5.0 % CC	1	R63
80	80		1305336-00	*** THIS ITEM IS NOT USED ***	-	
81	81		1309416-00	31.60 K .25 W 1.0 % RN55D-F10	1	R65
82	82		1002781-00	100 MFD 25V +75-10% AL EL	1	C20
83	83		9009185-00	JUMPER, WIRE, INSULATED, BLACK B	2	W1,W2
84	84		1303044-00	100.0 K .25 W 1.0 % RN55D-F10	1	R64
85	85		1015574-00	*** THIS ITEM IS NOT USED ***	-	
86	86		1315435-00	25.50 K .25 W 1.0 % RN55D-F10	1	R66
87	87		1312930-00	5.10 K .25 W 5.0 % CC	1	R67
88	88		1015520-00	1 MFD 100V 5% MET. MYLR	1	C19
89	89		1513697-00	2N 5640 FET N CHNNL	1	Q10
90	90		1300479-00	10.0 K .25 W 5.0 % CC	1	R69
91	91		1302466-00	100.0 K .25 W 5.0 % CC	1	R70
92	92		9105740-55	WIRE(WRAP)30AWG UL1423	A/R	

D	I	G	I	T	A	L	TITLE	SECTION A OF A
							D.C. SERVO AND POWER SUPPLY	

SIZE	CODE	DOCUMENT NUMBER	REV
K	PL	5413534-0-DBP	C

COMPONENT SIDE VIEW

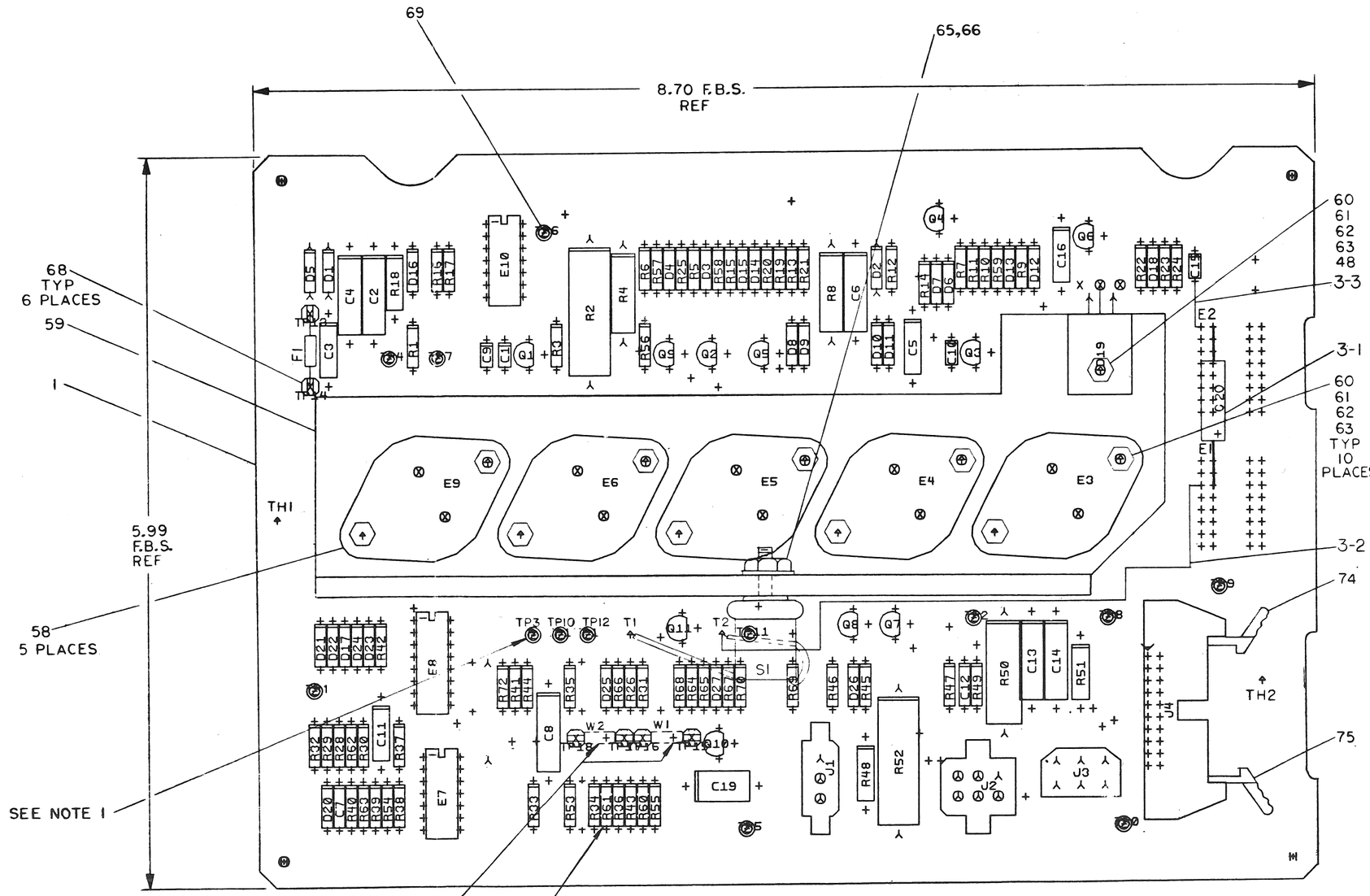

NOTES:

1. TP3, TP11, TP12 & TP15 THRU TP18 TO BE MOUNTED ON SIDE 2.
2. R60 AND R61 ARE TO BE INSTALLED AFTER FINAL TEST.
3. INSTALL W1 AND W2 FOR RL01. INSTALL W2 ONLY FOR RL22. W1 & W2 ARE LOCATED ON SIDE 2.
4. CS REV TO BE MARKED ON SIDE TWO (2).

REV	CHANGE NO	CHK
B	5413534-C0001 BOB NOGUCHI	
C	5413534-CX012A M. ZARICH	
D	5413534-CX003 M. ZARICH	
E	5413534-CX004 DB. 17JUN81 M. ZURICH	

ETCH REV. B
P.C. DESIGN DATA BASE REV. BL

SIGNATURES	DATE
DRN.	6/5/78
CHK'D.	6/5/78
ENG.	
PROJ. ENG.	
PROD.	6/27/78
SCALE 2/1	
SHT. 1 OF 2	
NEXT HIGHER ASSY. B-DD-5413534-0	

digital

TITLE DC SERVO & POWER SUPPLY

SIZE	CODE	NUMBER	REV
D	UA	5413534-0-0	E

MS# 291-021

SIZE D CODE UA NUMBER 5413534-0-0 REV E

REWORK INSTRUCTIONS:

ECO 5413534-CX003

COMPONENT ADDS SIDE 1:

3-1 ADD POLARIZED SIDE OF C20 (1002781-00) AT E1-3 AND THE GND SIDE AT E2-1.

WIRE ADDS SIDE 1:

3-2 ADD WIRE FROM THE PTH NEXT TO E1-3 TO T2.

3-3 ADD WIRE FROM THE PTH NEXT TO E2-1 TO C15 GND (BOTTOM).

SIZE D CODE UA NUMBER 5413534-0-0 REV E

REVISION HISTORY		
DATE	ECO NUMBER	REV.

TITLE DC SERVO AND POWER SUPPLY

DOCUMENT NUMBER			
SIZE	CODE	NUMBER	REV.
D	UA	5413534-0-0	E
SCALE —//—		SHEET 2 OF 2	

DRD 137A

LINE	ITEM	DOCUMENT NUMBER	PART NUMBER	DESCRIPTION	QTY PER VARIATION 00	REFERENCE DESIGNATOR
1	1	D-MD-5013533-0-0	5013533-00	ETCHED CIRCUIT BOARD	1	
2	2		1013466-08	680.0 MMF 50V 10% X7R CER	1	C12
3	3		1016009-00	2200.0 MMF 50V 5% CER	1	C7
4	4		1001610-00	.01 MFD 50V +80-20% Z5U CER	4	C1,C9,C10,C15
5	5		1002630-00	.015 MFD 100V 10% MYLR	1	C8
6	6		1013466-11	.22 MFD 50V +80-20% Z5U CER	4	C3,C5,C11,C16
7	7		1005306-00	*** THIS ITEM IS NOT USED ***	-	
8	8		1000076-00	*** THIS ITEM IS NOT USED ***	-	
9	9		1309422-00	5.10 .25 W 5.0 % CC	1	R58
10	10		1312929-00	62.0 .25 W 5.0 % CC	2	R3,R23
11	11		1311523-00	110.0 .25 W 5.0 % CC	1	R22
12	12		1300247-00	120.0 .25 W 5.0 % CC	1	R13
13	13		1300271-00	220.0 .25 W 5.0 % CC	1	R59
14	14		1301425-00	300.0 .25 W 5.0 % CC	1	R55
15	15		1303178-00	620.0 .25 W 5.0 % CC	1	R6
16	16		1300365-00	1.0 K .25 W 5.0 % CC	5	R1,R7,R39,R44,R57
17	17		1300391-00	1.50 K .25 W 5.0 % CC	1	R5
18	18		1302388-00	2.0 K .25 W 5.0 % CC	2	R31,R43
19	19		1300426-00	2.70 K .25 W 5.0 % CC	2	R46,R47
20	20		1302389-00	4.30 K .25 W 5.0 % CC	1	R53
21	21		1300447-00	4.70 K .25 W 5.0 % CC	10	R10-R12,R14,R15,R19,R20,R24,R49,
					CONT	R68
22	22		1303179-00	8.20 K .25 W 5.0 % CC	3	R9,R16,R17
23	23		1300488-00	12.0 K .25 W 5.0 % CC	4	R25,R26,R45,R56
24	24		1305346-00	27.0 K .25 W 5.0 % CC	1	R21
25	25		1305131-00	*** THIS ITEM IS NOT USED ***	-	
26	26		1312923-00	2.10 K .25 W 1.0 % RN55D-F10	1	R41
27	27		1305114-00	3.48 K .25 W 1.0 % RN55D-F10	1	R34
28	28		1314763-00	4.12 K .25 W 1.0 % RN55D-F10	1	R36
29	29		1303312-00	10.0 K .25 W 1.0 % RN55D-F10	3	R28,R29,R62

REVISION HISTORY			BASIC PART NO: 5413534		
ENG	ECO NUMBER	REV	SECTION A OF A	DRN: JERRY BEST	DATE: 26-JUL-78
	INIT	A	SECTION.VARIATION INDEX	CHK'D: JERRY BEST	DATE: 26-JUL-78
BN	5413534-CZ001	B	[A] 00		
MZ	5413534-CX003	C	[B]	DES.ENG: R. NOGUCHI	DATE:
MZ	5413534-CX004	D	[C]		
MB			[D]		
			[E]		
			[F]	RESP.ENG.: R. NOGUCHI	DATE: 26-JUL-78
			[H]		
			[J]		
			[K]	MFG.ENG.: P. CHURCH	DATE:
			[L]		
			[M]	ASSEMBLY NUMBER:	TOP DOCUMENT NUMBER:
			[N]	D-UA-5413534-0-0	RL02

D	I	G	I	T	A	L

TITLE PARTS LIST
D.C. SERVO AND POWER SUPPLY

DOCUMENT NUMBER

SIZE	CODE	NUMBER	REV
K	PL	5413534-0-DBP	D

FILE NAME: Z0494D.PLS
EDIT # 20

LINE	ITEM	DOCUMENT NUMBER	PART NUMBER	DESCRIPTION	QTY PER VARIATION 00	REFERENCE DESIGNATOR
30	30		1312924-00	10.70 K .25 W 1.0 % RN55D-F10	1	R32
31	31		1309412-00	18.20 K .25 W 1.0 % RN55D-F10	1	R33
32	32		1315436-00	52.30 K .25 W 1.0 % RN55D-F10	1	R54
33	33		1304843-00	243.0 K .25 W 1.0 % RN55D-F10	1	R72
34	34		1315437-00	237.0 K .25 W .10% RN55D-F10	1	R38
35	35		1302378-00	51.0 .50 W 5.0 % CC	1	R51
36	36		1300364-00	1.0 K .50 W 5.0 % CC	2	R18,R48
37	37		1314068-00	360.0 1.0 W 5.0 % CC	1	R4
38	38		1300368-00	1.0 K 1.0 W 5.0 % CC	1	R8
39	39		1301494-00	200.0 2.0 W 5.0 % CC	1	R50
40	40		1313358-00	.20 5.0 W 3.0 % WW	2	R2,R52
41	41		1105796-00	1N 4004 PIV=400 I= 1A D041 SP	3	D1,D2,D5
42	42		1113953-00	1N 5523D VZ= 5.1 1%	8	D4,D6,D8,D9,D16,D18,D21,D22
43	43		1109990-00	1N 757A VZ= 9.1 5% .40W P	2	D23,D24
44	44		1110994-00	1N 751A VZ= 5.1 5% .40W	1	D14
45	45		1114117-00	1N 4152 PIV=40 I=75	6	D3,D7,D10,D11,D12,D13
46	46		1111577-00	1N 4454 TR= 4NS PIV= 50 S	6	D15,D17,D20,D25-D27
47	47		1513698-00	TRIAC@200V,I>14A	1	D19
48	48		9009597-00	INSULATOR, THERMA-FILM	1	
49	49		1513489-00	2N 4401 NPN 350MW SI 40 20	4	Q2,Q4,Q8,Q9
50	50		1513490-00	2N 4403 PNP 350MW SI-40 30	6	Q1,Q3,Q5-Q7,Q11
51	51		1511282-00	MJ2500 PNP 150WC SI 60 5 1K 5A	2	E4,E6
52	52		1511349-00	TIP 640 (OR MJ3000) NPN DARLINGT	1	E3
53	53		1911706-00	5012 ANALOG SWITCH,4CHNL	1	E8
54	54		1912818-00	LS38 NAND BUFFER-QUAD 2IN	1	E10
55	55		1912107-01	324ANOP AMP,QUAD	1	E7
56	56		1913695-00	7808 VOLT REG,FIX +8V	1	E9
57	57		1913694-00	7908 VOLT REG,FIX -8V	1	E5
58	58		9008419-00	WASHER, FLAT, THERMAFILM .002THK	5	
59	59		7418595-00	HEATSINK ASSEMBLY	1	
60	60		9008033-01	SCREW,PAN,PHIL 4-40X 9/16 SS	11	
61	61		9006557-00	NUT,KEP , 4-40X 1/4 AF	11	
62	62		9006655-00	WASHER, FLAT, .312 O.D. X .125 I	11	
63	63		9008268-00	COMPOUND, THERMAL JOINT	A/R	
64	64		1210824-00	THERMOSTAT,O@215,C@156,SPST,NORM	1	S1
65	65		9008185-00	NUT,KEP , 6-32X1/4 AF	1	
66	66		9006653-00	WASHER, FLAT, .375 O.D. X .156 I	1	
67	67		1205747-00	FUSE, SUB-MINI, 5.000A, 125V, A	1	F1
68	68		9006735-00	EYELET, FUNNEL FLANGE, .059 OD X	6	TP13-TP18
69	69		9007791-00	TERM PCB 2POS SOLDER,TURRET	13	TP0-TP12
70	70		1213922-01	HEADER 3POS	1	J1
71	71		1213922-04	HEADER 6POS	1	J2
72	72		1213900-00	CONN,RCPT 6POS	1	J3
73	73		1209941-06	HEADER.100 20POS RT ANGLE	1	J4
74	74		1209941-04	HEADER RT ANGLE,RIGHT	1	
75	75		1209941-03	HEADER RT ANGLE LEFT L	1	
76	76		1305324-00	4.99 K .25 W 1.0 % RN55D-F10	2	R37,R30
77	77		1300250-00	150.0 .25 W 5.0 % CC	1	R42

D	I	G	I	T	A	L	TITLE	SECTION A OF A	SIZE	CODE	DOCUMENT NUMBER	REV
							D.C. SERVO AND POWER SUPPLY		K	PL	5413534-0-DBP	D

LINE	ITEM	DOCUMENT NUMBER	PART NUMBER	DESCRIPTION	QTY PER VARIATION 00	REFERENCE DESIGNATOR
78	78		1312618-00	16.90 K .25 W 1.0 % RN55D-F10	1	R40
79	79		1300229-00	100.0 .25 W 5.0 % CC	1	R63
80	80		1305336-00	*** THIS ITEM IS NOT USED ***	-	
81	81		1309416-00	31.60 K .25 W 1.0 % RN55D-F10	1	R65
82	82		1002781-00	100 MFD 25V +75-10% AL EL	1	C20
83	83		9009185-00	JUMPER, WIRE, INSULATED, BLACK B	2	W1,W2
84	84		1303044-00	100.0 K .25 W 1.0 % RN55D-F10	1	R64
85	85		1015574-00	*** THIS ITEM IS NOT USED ***	-	
86	86		1315435-00	25.50 K .25 W 1.0 % RN55D-F10	1	R66
87	87		1312930-00	5.10 K .25 W 5.0 % CC	1	R67
88	88		1015520-00	1 MFD 100V 5% MET. MYLR	1	C19
89	89		1513697-00	2N 5640 FET N CHNNL	1	Q10
90	90		1300479-00	10.0 K .25 W 5.0 % CC	1	R69
91	91		1302466-00	100.0 K .25 W 5.0 % CC	1	R70
92	92		9105740-55	WIRE(WRAP)30AWG UL1423	A/R	
93	93		1017472-00	10 MFD 35V +50-10% AL EL	4	C4,C6,C13,C14
94	94		1016549-00	47 MFD 10V +50-10% AL EL	1	C2

D	I	G	I	T	A	L	TITLE	SECTION A OF A
							D.C. SERVO AND POWER SUPPLY	

SIZE	CODE	DOCUMENT NUMBER	REV
K	PL	5413534-0-DBP	D

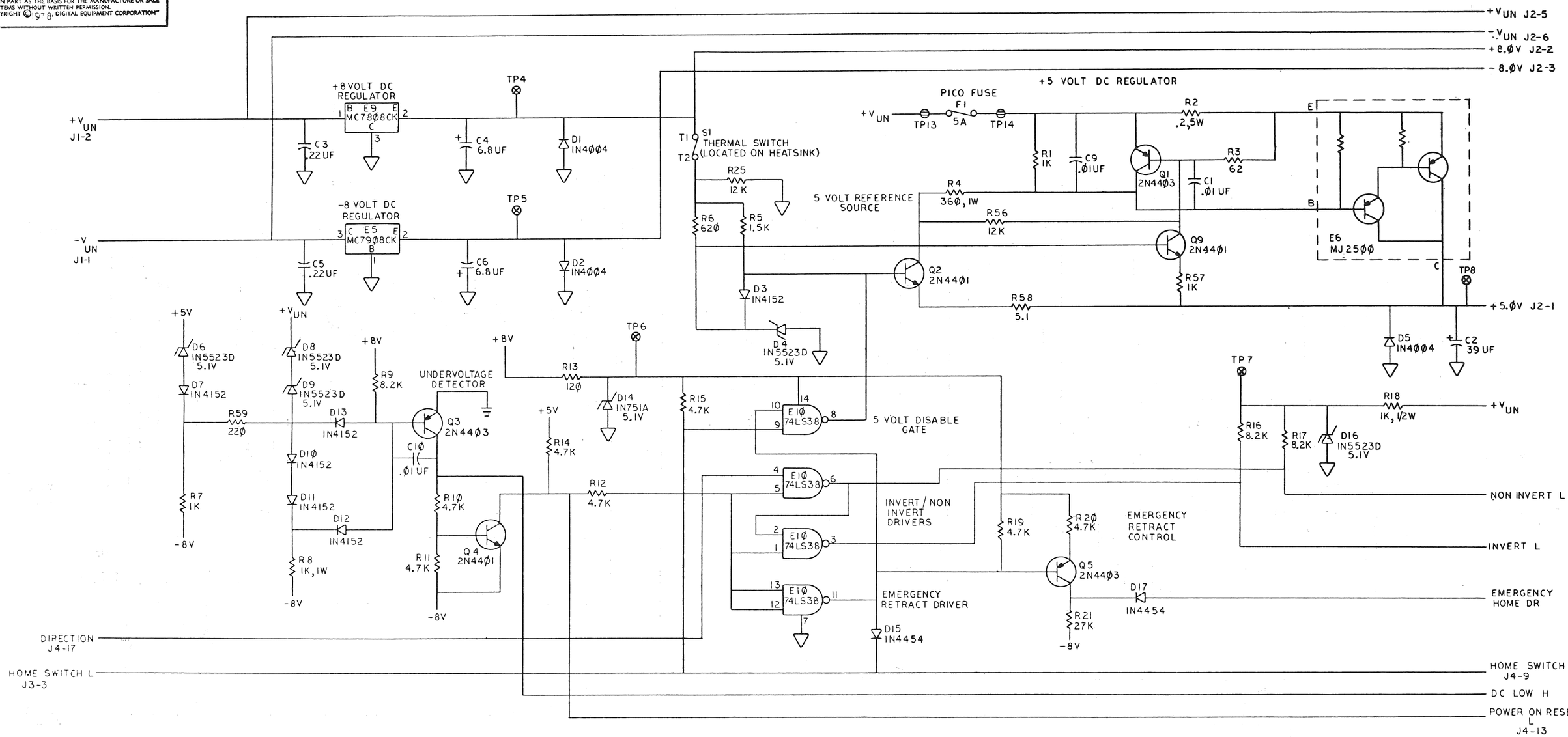

NOTES:

1. ALL RESISTORS TO BE 1/4W, 5%; UNLESS OTHERWISE SPECIFIED.
2. E1 AND E2 ARE SPARES.
3. VALUE OF R6Ø OR R61 WILL BE DETERMINED IN TESTING.
4. INSTALL W1 AND W2 FOR RLØ1 ON SIDE 2. INSTALL W2 ONLY FOR RLØ2 ON SIDE 2.

REVISIONS			
CHK	CHANGE NO.		REV.
	5413534-0-1 BOB NOGUCHI		B
10-Mar-78	5-413534-0-0 M. ZARICH		C

DESCRIPTION	DWG./PART NO.	ITEM NO.

UNLESS OTHERWISE SPECIFIED DIMENSIONS ARE IN INCHES

ANGLES ±0° 30'	CLASS OF ACCURACY (CHECK ONE)	OVER 0 TO 0.2	OVER 0.2 TO 1.2	OVER 1.2 TO 4.0	OVER 4.0 TO 12.0	OVER 12.0 TO 40.0	OVER 40.0 TO 80.0
SURFACE QUALITY IN MICROINCHES	MEDIUM	±.004	±.008	±.012	±.016	±.024	±.04
	PREFERRED	±.012	±.016	±.025	±.04	±.063	±0.1

QUANTITY & VARIATION

THIRD ANGLE PROJECTION

REMOVE BURRS AND BREAK SHARP CORNERS

DO NOT SCALE DWG

MATERIAL

FINISH

DRN. CHK'D ENG. PROJ. ENG. PROD.

NEXT HIGHER ASSY. D-UA-5413534-0-0

SCALE

SHEET 1 OF 2

FIRST USED ON

digital

TITLE DC SERVO AND POWER SUPPLY

SIZE	CODE	NUMBER	REV.
D	CS	5413534-0-1	C

DIST.

DEC FORM NO. BBD 100-C

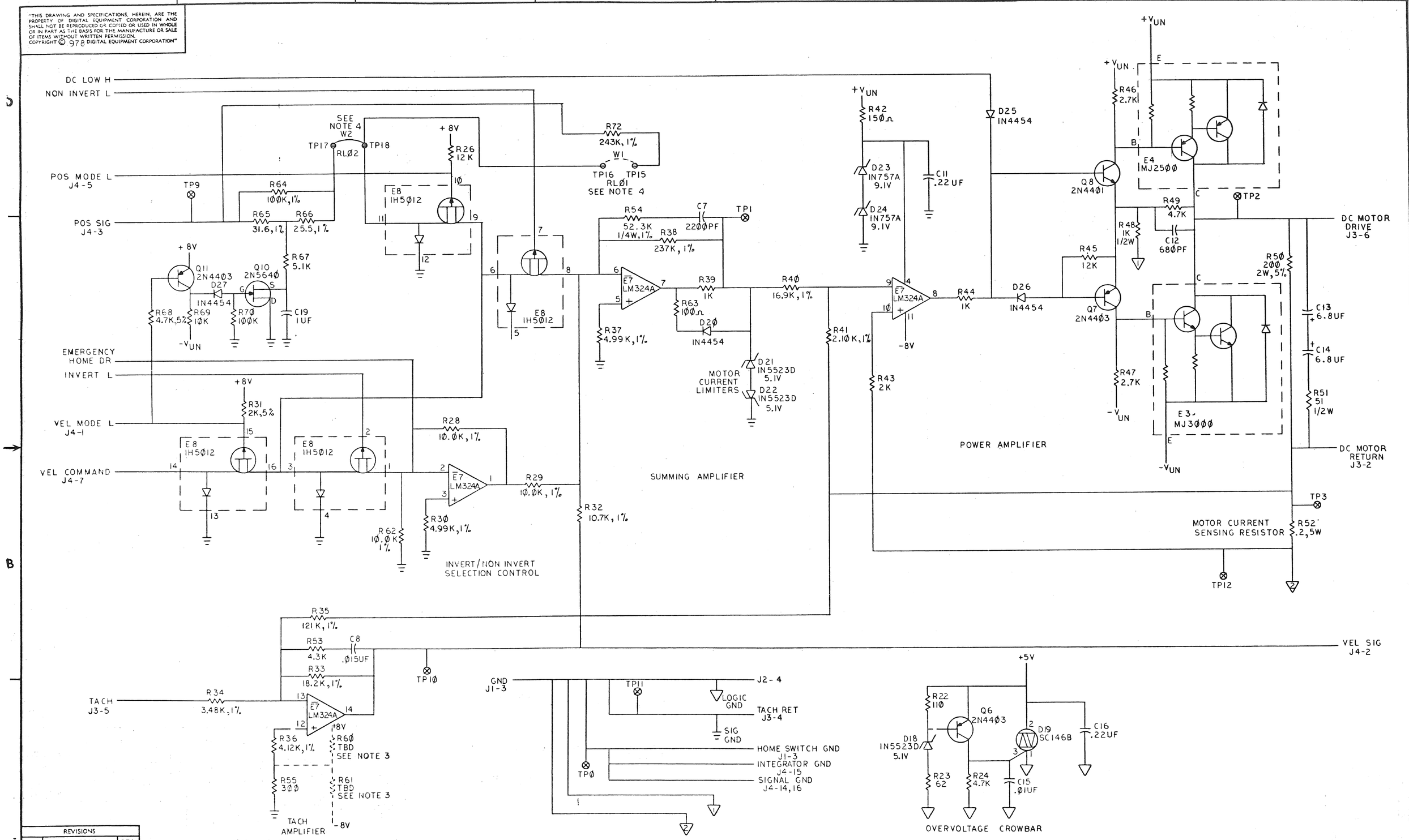

REVISIONS		
CHK	CHANGE NO	REV.

TITLE	SIZE	CODE	NUMBER	REV.
DC SERVO AND POWER SUPPLY	D	CS	5413534-0-1	C
SCALE	SHEET 2 OF 2	DIST.		

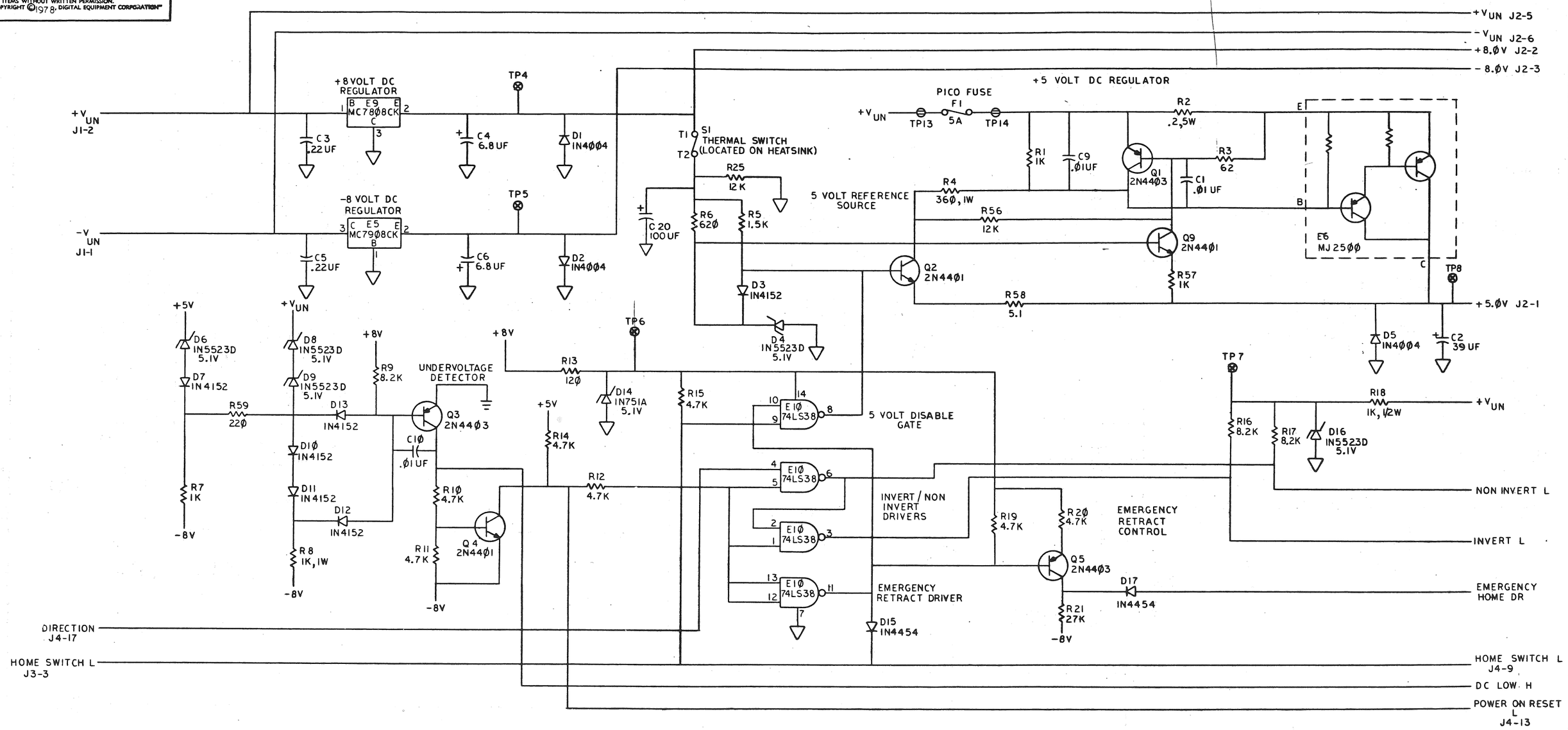

NOTES:

1. ALL RESISTORS TO BE 1/4W, 5%; UNLESS OTHERWISE SPECIFIED.
2. ~~E1 AND E2 ARE SPARES.~~
3. VALUE OF R6Ø OR R61 WILL BE DETERMINED IN TESTING.
4. INSTALL W1 AND W2 FOR RLØ1 ON SIDE 2. INSTALL W2 ONLY FOR RLØ2 ON SIDE 2.

REVISIONS			
REV.	B	C	D
CHANGE NO.	5413534-CZØØ1 BOB NOGUCHI	5413534-CXØ2A M. ZARICH	5413534-CXØØ3 M. ZARICH
CHK			

DESCRIPTION		DWG./PART NO.	~~ITEM NO.~~
UNLESS OTHERWISE SPECIFIED DIMENSIONS ARE IN INCHES			
ANGLES ±0° 30'	CLASS OF ACCURACY (CHECK ONE)	NOMINAL DIMENSION RANGE INCHES	
SURFACE QUALITY IN MICROINCHES	MEDIUM	±.004	±.008 ±.012 ±.016 ±.024 ±.04
	PREFERRED	±.012	±.016 ±.025 ±.04 ±.063 ±0.1

QUANTITY & VARIATION

THIRD ANGLE PROJECTION

REMOVE BURRS AND BREAK SHARP CORNERS

DO NOT SCALE DWG

MATERIAL

FINISH

DRN. R. Richard	8/15/78	FIRST USED ON
CHK'D		digital
ENG.		TITLE
PROJ. ENG.	9/27/78	DC SERVO AND POWER SUPPLY
PROD.	9/27/78	
NEXT HIGHER ASSY.		
D-UA-5413534-0-0		
SCALE —		
SHEET 1 OF 2		

SIZE	CODE	NUMBER	REV.
D	CS	5413534-0-1	D
DIST.			

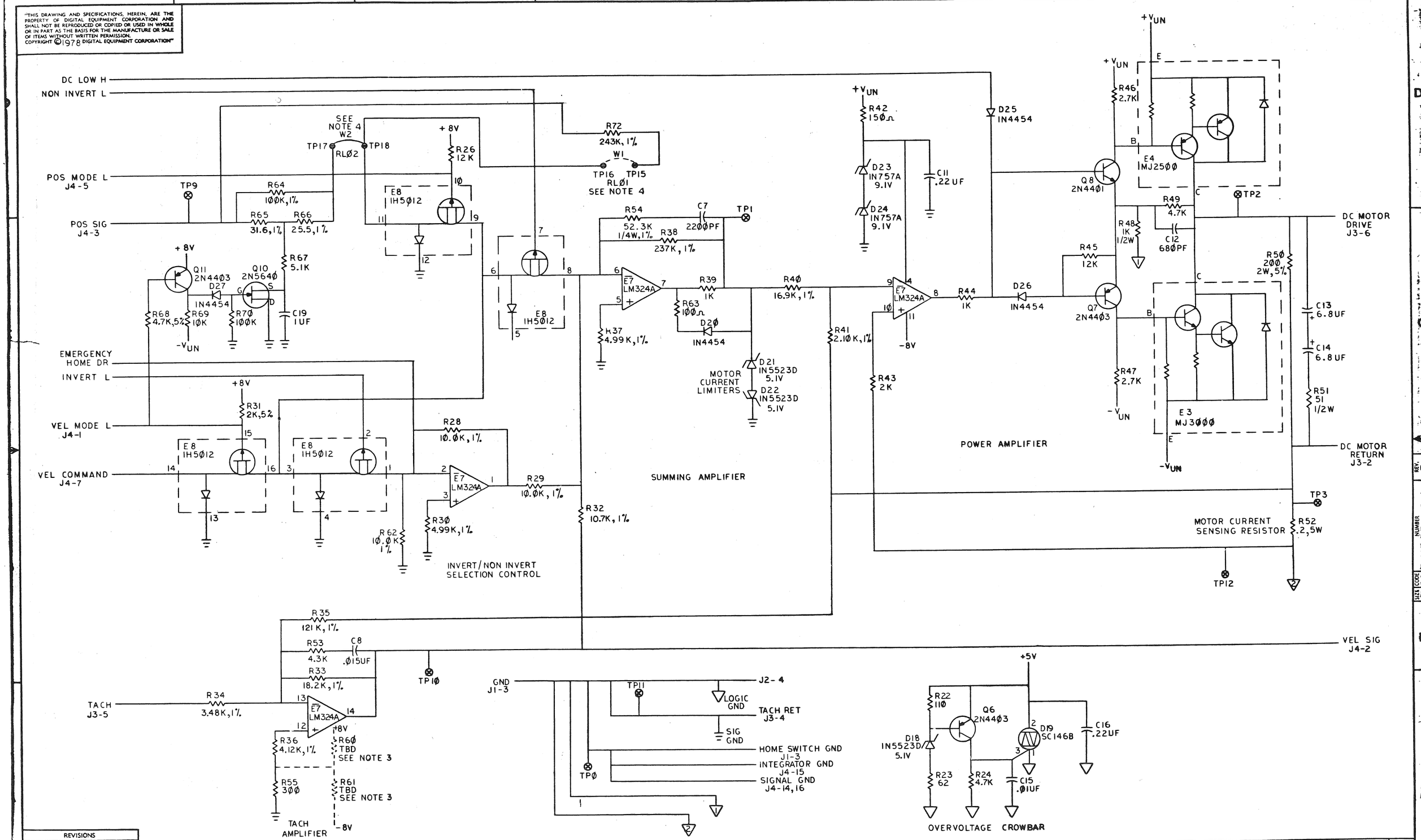

REVISIONS		
CHK	CHANGE NO.	REV.

TITLE	SIZE	CODE	NUMBER	REV.
DC SERVO AND POWER SUPPLY	D	CS	5413534-0-1	D
SCALE	SHEET 2 OF 2	DIST.		

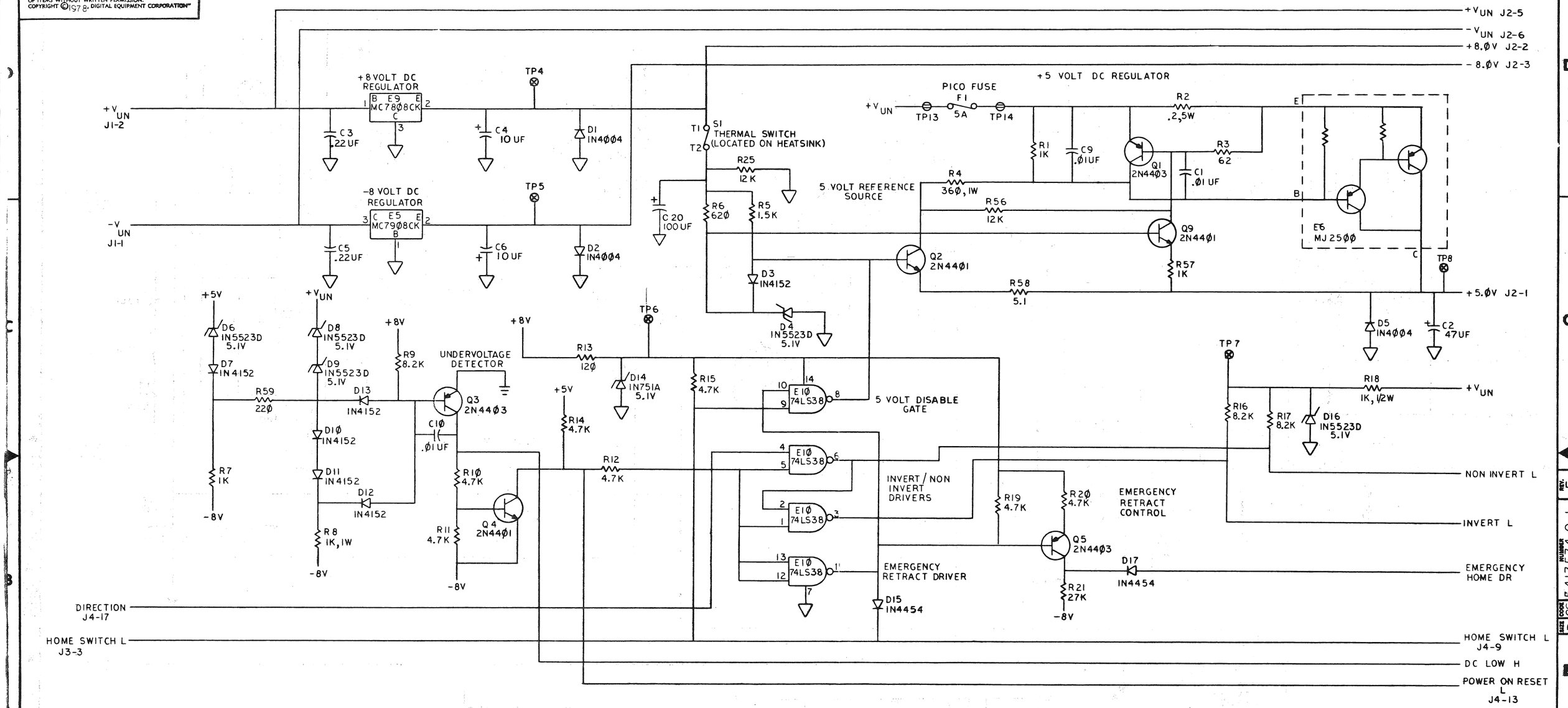

NOTES:

1. ALL RESISTORS TO BE 1/4W, 5%; UNLESS OTHERWISE SPECIFIED.
2. ~~E1 AND E2 ARE SPARES.~~
3. VALUE OF R6Ø OR R61 WILL BE DETERMINED IN TESTING.
4. INSTALL W1 AND W2 FOR RLØ1 ON SIDE 2. INSTALL W2 ONLY FOR RLØ2 ON SIDE 2.

REV.	CHANGE NO.	CHK
B	5413534-CZØØ1 BOB NOGUCHI	
C	5413534-CXØ2A M. ZARICH	
D	5413534-CXØØ3 M. ZARICH	
E	5413534-CXØØ4 DB. 17 JUNE 81 M. ZARICH	801

DESCRIPTION	DWG./PART NO.	ITEM NO.
UNLESS OTHERWISE SPECIFIED DIMENSIONS ARE IN INCHES		

ANGLES ±0° 30'	CLASS OF ACCURACY (CHECK ONE)	OVER 0 TO 0.2	OVER 0.2 TO 1.2	OVER 1.2 TO 4.0	OVER 4.0 TO 12.0	OVER 12.0 TO 40.0	OVER 40.0 TO 80.0
SURFACE QUALITY IN MICROINCHES	MEDIUM	±.004	±.008	±.012	±.016	±.024	±.04
	PREFERRED	±.012	±.016	±.025	±.04	±.063	±0.1

QUANTITY & VARIATION

THIRD ANGLE PROJECTION

REMOVE BURRS AND BREAK SHARP CORNERS

DO NOT SCALE DWG

MATERIAL

FINISH

DRN. R. Richard	8/15/78	FIRST USED ON
CHK'D		digital
ENG.	9/27/78	TITLE
PROJ. ENG.	9/27/78	DC SERVO AND POWER SUPPLY
PROD.	9/27/78	
NEXT HIGHER ASSY.		
D-UA-5413534-0-0		SIZE D CODE CS NUMBER 5413534-0-1 REV. E
SCALE —		
SHEET 1 OF 2		DIST.

DFC FORM NO DRD 100-C

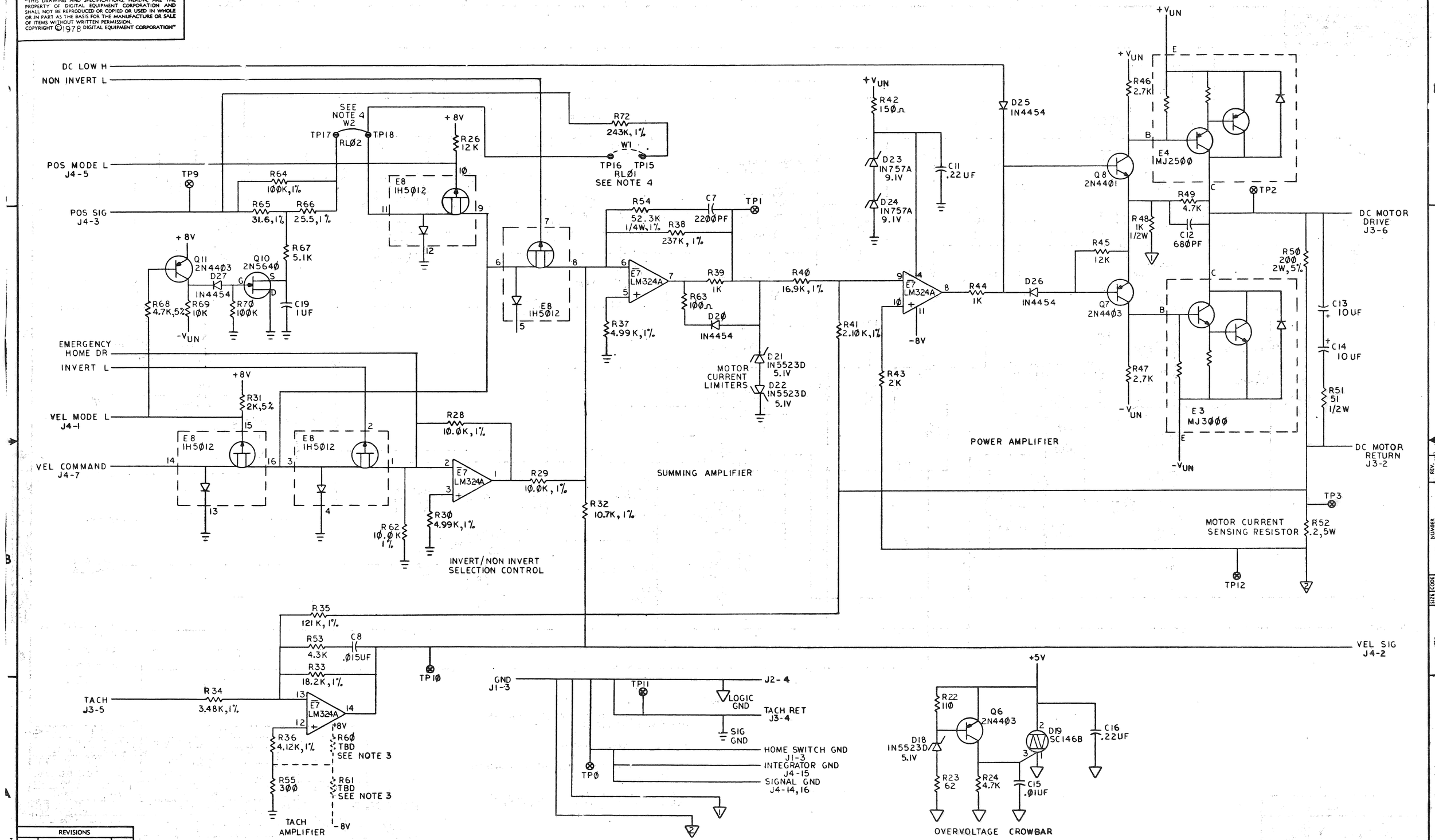

REVISIONS		
CHK	CHANGE NO.	REV.

TITLE	SIZE	CODE	NUMBER	REV.
DC SERVO AND POWER SUPPLY	D	CS	5413534-0-1	E
SCALE	SHEET 2 OF 2	DIST.		

DEC FORM NO. DRD 137

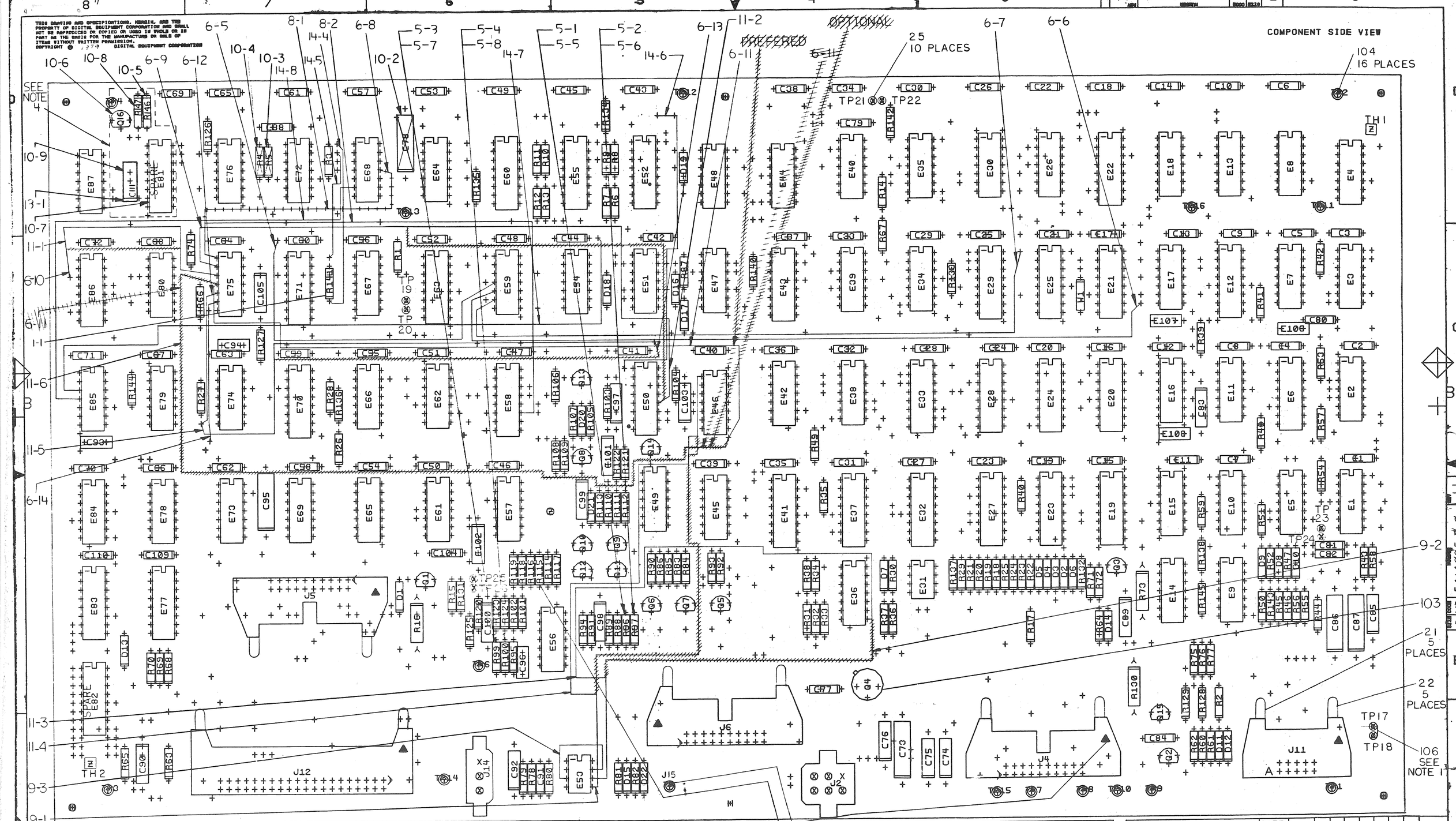

NOTES:

1. INSTALL ITEM 106 AFTER TEST (BETWEEN TP17 & TP18 ONLY).
2. VALUE OF ITEM 2 TO BE DETERMINED AT NEXT HIGHER ASSEMBLY.
3. STAMP ORIENTATION TRIANGLES ON CONNECTORS AS SHOWN WITH INDELIBLE RED INK.

REV	CHANGE NO	CHK
B	5414025-CX001 M.BROWN	
C	5414025-CX003 M.ZARICH	
D	5414025-CX005 M.BROWN	
E	5414025-CX006A M.BROWN	
F	5414025-CX008 M.BROWN	
H	5414025-CX009 M.ZARICH	631
J	5414025-CX010A M.BROWN	
K	5414025-CX011 K.D.22 OCT 80 M.ZARICH	704
L	5414025-CX013 D.B. 9 FEB 81 M.ZARICH	754
LI	5414025-CX014 R.N. 26 FEB 81 M.ZARICH	780

ETCH REV. B
P.C. DESIGN DATA BASE REV. BL

SIGNATURES	DATE
DRN.	
CHK'D.	4-27-79
ENG.	5/2/79
PROJ.ENG.	5/2/79
PROD.	
SCALE 2/1	
SHT. 1 OF 2	
NEXT HIGHER ASSY. B-DD-5414025-0	

digital

TITLE
DRIVE LOGIC

SIZE	CODE	NUMBER	REV
D	UA	5414025-0-0	LI

MS#291-061

ECO# 5414025-CX001

COMPONENT DELETE:

1-1 REMOVE R141

ECO# 5414025-CX003

COMPONENT DELETE:

3-1 REMOVE TP5

COMPONENT ADD:

3-2 ADD J15, ITEM 109 AT PTH FOR TP5

ECO# 5414025-CXØØ5

COMPONENT DELETES:

5-1 R96,(365 K).
5-2 R97,(30.1 K).
5-3 R99,(365 K).
5-4 R100,(30.1 K).

COMPONENT ADDS:

5-5 R96,(3.65K).
5-6 R97, (301).
5-7 R99, (3.65K).
5-8 R100, (301).

ECO# 5414025-CXØØ6

ETCH CUTS:

6-1
6-2
6-3
6-4
} SEE D-EC-5014024-0-0

WIRE ADDS SIDE 1:

6-5 FROM E59-4 TO E71-2 (PTH TO THE LEFT OF C6Ø).
6-6 FROM E59-5 TO E21-7 (PTH TO THE RIGHT OF E21-10).
6-7 FROM E59-6 TO E25-1 (PTH TO THE LEFT OF E25-1).
6-8 FROM E75-1 TO E68-11.
6-9 FROM E75-2 TO E5Ø-12.
6-10 FROM E75-3 TO PTH TO THE LEFT OF E86-3.
6-11 FROM E75-4 TO PTH BELOW E46-8.
6-12 FROM E75-5 TO PTH BELOW R27.
6-13 FROM PTH BELOW R27 TO PTH TO THE UPPER RIGHT OF C41.
6-14 FROM E75-6 TO E73-1 (PTH ALONG ETCH ABOVE E73-1).

ECO# 5414025-CX008

WIRE DELETE:

8-1 E68-11 TO E75-1.

WIRE ADD:

8-2 E75-1 TO E58-11.

ECO# 5414025-CX009

WIRE ADDS:

9-1 E46 PIN 1 TO E53 PIN 5.
9-2 E36 PIN 8 TO E53 PIN 6.
9-3 E53 PIN 7 TO E53 PIN 3.

ECO# 5414025-CXØ1ØA

COMPONENT DELETES:

10-2 REMOVE C78 (1000076-00)
10-3 REMOVE R5 (1300365-00)
10-4 REMOVE R4 (1300447-00)

COMPONENT ADDS:

10-5 ADD R146 (1302391-00)
10-6 ADD Q16 (1513489-00)
10-7 ADD E81 (1912837-00)
10-8 ADD R147 (1305608-00)
10-9 ADD C111 (1005334-00)

ECO# 5414025-CXØ11

REROUTING INSTRUCTIONS:

11-1 REROUTE WIRE 6-10 (E75-3 TO PTH TO THE LEFT OF E86-3).
11-2 REROUTE WIRE 6-9 (E75-2 TO E50-12).
11-3 REROUTE WIRE 9-2 (E36-8 TO E53-6).
11-4 REROUTE WIRE 9-1 (E46-1 TO E53-5).
11-5 REROUTE WIRE 6-13 (FROM PTH BELOW R27 TO PTH TO THE UPPER RIGHT OF C41).

WIRE DELETES:

11-6 DELETE THE <u>OPTIONAL</u> ROUTING OF WIRE (6-11).

ECO# 5414025-CXØ13

COMPONENT ADD:

13-1 REMOVE C111 (1005334-00) ROTATE 180° AND REPLACE.

ECO# 5414025-CXØ14

WIRE ADDS:

14-4 ADD WIRE FROM THE FEED THRU TO THE LEFT OF E68-1 TO THE FEED THRU TO THE LEFT OF E67-6.

14-5 ADD WIRE FROM THE FEED THRU TO THE LEFT OF E68-2 TO THE FEED THRU TO THE RIGHT OF E71-16.

14-6 ADD WIRE FROM THE FEED THRU DIRECTLY ABOVE E52-16 TO THE FEED THRU TO THE LEFT OF E50-1.

14-7 ADD WIRE FROM THE FEED THRU GOING TO E54-12 ABOVE E54 TO E85-3.

14-8 ADD WIRE FROM E85-4 TO E68-6.

NOTES: CONT.

4 THESE COMPONENTS MAY OR MAY NOT APPEAR DEPENDING UPON THE ORIGINAL CS REV BEFORE INSTALLING ECO 5414025-CXØ14.

REVISION HISTORY		
DATE	ECO NUMBER	REV.

TITLE	DOCUMENT NUMBER		
DRIVE LOGIC	SIZE D / CODE UA	NUMBER 5414025-0-0	REV. L1
	SCALE NONE	SHEET 2 OF 2	

DRD 137A

AUTOMATED BY PRTLST.3H(20) P A R T S L I S T SHEET A1 OF A3

LINE	ITEM	DOCUMENT NUMBER	PART NUMBER	DESCRIPTION	QTY PER VARIATION 00	REFERENCE DESIGNATOR
1	1	D-MD-5014024-0-0	5014024-00	DRILL AND ETCH BRD	1	
2	2	EWS		RESISTOR,FINAL TEST, 1/4W, 1%	4	R115,R116,R118,R119
3	3		1000023-00	330.0 MMF 100V 5%200PPM MICA	4	C93,C106-C108
4	4		1000024-00	470.0 MMF 100V 5%200PPM MICA	1	C94
5	5		1000064-00	3.9MFD 10V 10% S.TANT	2	C76,C85
6	6		1000076-00	39 MFD 10V 10% S.TANT	3	C73,C86,C95
7	7		1001610-00	.01 MFD 50V +80-20% Z5U CER	74	C1-C6,C8-C39,C40-C45,C47-C49,
						CONT C51-C53,C55-C68,C70,C71,C77,
						CONT C79-C82,C84,C88,C104
8	8		1001776-00	1 MFD 35V 10% S.TANT	4	C74,C75,C92,C97
9	9		1004812-00	15 MFD 20V 10% S.TANT	1	C87
10	10		1005784-00	.01 MFD 100V 10% MYLR	1	C101
11	11		1010978-32	.047 MFD 50V 10% CER	1	C96
12	12		1013466-07	220.0 MMF 50V 5% CER	1	C91
13	13		1013466-08	680.0 MMF 50V 10% X7R CER	2	C89,C90
14	14		1013466-09	1000.0 MMF 50V 10% X7R CER	1	C83
15	15		1013466-10	3300.0 MMF 50V 5% CER	4	C98,C100,C103,C105
16	16		1013466-11	.22 MFD 50V +80-20% Z5U CER	2	C99,C102
17	17		1111577-00	1N 4454 TR= 4NS PIV= 50 S	16	D1,D7-D20,D22
18	18		1113953-00	1N 5523D VZ= 5.1 1%	1	D21
19	19		1114117-00	1N 4152 PIV=40 I=75	5	D2-D6
20	20		1209941-02	HEADER 100 40POS RT ANGLE	1	J12
21	21		1209941-03	HEADER RT ANGLE LEFT L	5	
22	22		1209941-04	HEADER RT ANGLE,RIGHT	5	
23	23		1209941-05	HEADER,100 10POS RT ANGLE	1	J11
24	24		1209941-06	HEADER,100 20POS RT ANGLE	3	J4-J6
25	25		1210385-01	PIN 1POS WIRE WRAP	10	TP17-TP26
26	26		1213922-02	HEADER 3POS	1	J14
27	27		1213922-04	HEADER 6POS	1	J2
28	28		1300229-00	100.0 .25 W 5.0 % CC	5	R48,R133-R136

REVISION HISTORY			BASIC PART NO: 5414025			
ENG	ECO NUMBER	REV	SECTION A OF A	DRN: ART SIMM	DATE: 18-APR-79	TITLE PARTS LIST
	INITIAL	A	SECTION,VARIATION INDEX	CHK'D: P. KENDRICK	DATE: 18-APR-79	DRIVE LOGIC
MB	5414025-CX001	B	[A] 00			
MB	5414025-CX002	C	[B]	DES.ENG: MIKE BROWN	DATE: 18-APR-79	
MZ	5414025-CX003	D	[C]			
MB	5414025-CX005	E	[D]			DOCUMENT NUMBER
MB	5414025-CX010A	F	[E]			
MZ	5414025-CX014	H	[F]	RESP.ENG.: MIKE BROWN	DATE: 18-APR-79	
	W.C.M. 2 MAR 81		[H]			SIZE CODE NUMBER REV
	M. Zarch 3/2/81		[J]			
			[K]	MFG.ENG.: D. LICK	DATE: 18-APR-79	K PL 5414025-0-DBP H
			[L]			
			[M]	ASSEMBLY NUMBER:	TOP DOCUMENT NUMBER:	FILE NAME: EDIT #
			[N]	D-UA-5414025-0-0	#RL02	Z0496H.PLS 31

AUTOMATED BY PRTLST.3H(20) P A R T S L I S T SHEET A2 OF A3

LINE	ITEM	DOCUMENT NUMBER	PART NUMBER	DESCRIPTION	QTY PER VARIATION 00	REFERENCE DESIGNATOR
29	29		1300271-00	220.0 .25 W 5.0 % CC	4	R3,R14,R41,R143
30	30		1300315-00	470.0 .50 W 5.0 % CC	3	R16,R73,R130
31	31		1300316-00	470.0 .25 W 5.0 % CC	4	R1,R2,R79,R142
32	32		1300365-00	1.0 K .25 W 5.0 % CC	15	R15,R39,R40,R42,R47,R52,R54,R56,
						CONT R61,R72,R74,R101,R106,R129,R140
33	33		1300411-00	2.0 K .25 W 1.0 % RN55D-F10	1	R144
34	34		1300439-00	3.30 K .25 W 5.0 % CC	3	R93,R124,R126
35	35		1300447-00	4.70 K .25 W 5.0 % CC	35	R6-R13,R26-R28,R34,R35,R38,R43,
						CONT R44,R49,R53,R57,R58,R62,R75-R78,
						CONT R80,R82,R92,R102,R105,R123,R125,
						CONT R127,R138,R145
36	36		1300479-00	10.0 K .25 W 5.0 % CC	2	R70,R107
37	37		1302388-00	2.0 K .25 W 5.0 % CC	13	R18-R21,R45,R50,R66,R67,R71,R87,
						CONT R122,R128,R131
38	38		1302391-00	20.0 K .25 W 5.0 % CC	1	R59
39	39		1302394-00	30.0 K .25 W 5.0 % CC	1	R95
40	40		1302398-00	470.0 K .25 W 5.0 % CC	1	R55
41	41		1302466-00	100.0 K .25 W 5.0 % CC	1	R121
42	42		1302514-00	39.0 K .25 W 5.0 % CC	2	R91,R120
43	43		1302666-00	10.0 M .25 W 5.0 % CC	1	R94
44	44		1302871-00	1.21 K .25 W 1.0 % RN55D-F10	1	R88
45	45		1303044-00	100.0 K .25 W 1.0 % RN55D-F10	1	R25
46	46		1303047-00	464.0 .25 W 1.0 % RN55D-F10	5	R64,R65,R83,R85,R113
47	47		1303114-00	1.0 K .25 W 1.0 % RN55D-F10	2	R89,R117
48	48		1303312-00	10.0 K .25 W 1.0 % RN55D-F10	7	R17,R29-R31,R36,R60,R63
49	49		1304693-00	562.0 .25 W 1.0 % RN55D-F10	1	R108
50	50		1304841-00	75.0 K .25 W 5.0 % CC	1	R81
51	51		1304862-00	1.62 K .25 W 1.0 % RN55D-F10	1	R110
52	52		1304870-00	6.81 K .25 W 1.0 % RN55D-F10	1	R33
53	53		1305124-00	287.0 .25 W 1.0 % RN55D-F10	2	R84,R86
54	54		1305265-00	39.20 K .25 W 1.0 % RN55D-F10	1	R24
55	55		1305337-00	3.65 K .25 W 1.0 % RN55D-F10	2	R96,R99
56	56		1305405-00	24.90 K .25 W 1.0 % RN55D-F10	1	R23
57	57		1309595-00	1.0 M .25 W 5.0 % CC	3	R46,R51,R132
58	58		1310632-00	2.37 K .25 W 1.0 % RN55D-F10	1	R109
59	59		1317303-00	301.0 .25 W 1.0 % RN55D-F10	2	R97,R100
60	60		1312929-00	62.0 .25 W 5.0 % CC	2	R111,R112
61	61		1312930-00	5.10 K .25 W 5.0 % CC	3	R68,R69,R137
62	62		1312989-00	17.80 K .25 W 1.0 % RN55D-F10	3	R22,R103,R104
63	63		1313589-00	1.40 K .25 W 1.0 % RN55D-F10	1	R90
64	64		1313846-00	2.26 K .25 W 1.0 % RN55D-F10	1	R32
65	65		1314041-00	3.01 K .25 W 1.0 % RN55D-F10	1	R37
66	66		1314491-00	1.02 K .25 W 1.0 % RN55D-F10	1	R114
67	67		1513489-00	2N 4401 NPN 350MW SI 40 20	3	Q7,Q10,Q12
68	68		1513490-00	2N 4403 PNP 350MW SI-40 30	10	Q1-Q3,Q5,Q6,Q8,Q9,Q11,Q13,Q15
69	69		1513697-00	2N 5640 FET N CHNNL	1	Q14
70	70		1909928-00	7416 INVERTER GATE-HEX 1I	4	E9,E10,E68,E85
71	71		1910046-00	7442 DECODER-1 OF 10,BCD	1	E55

D	I	G	I	T	A	L	TITLE	SECTION A OF A
							DRIVE LOGIC	

SIZE	CODE	DOCUMENT NUMBER	REV
K	PL	5414025-0-DBP	H

LINE	ITEM	DOCUMENT NUMBER	PART NUMBER	DESCRIPTION	QTY PER VARIATION 00	REFERENCE DESIGNATOR
72	72		1910268-00	DEC 75107B RECEIVER,LINE,DUAL,	4	E57,E61,E65,E87
73	73		1910298-00	741 OP AMP GEN PURP. COM	1	E31
74	74		1910363-00	7496 SHIFT REG.,5BIT	1	E63
75	75		1910536-00	74S10 NAND GATE-TRIPLE 3IN	1	E45
76	76		1910655-00	74157 MUX 2 TO 1 QUAD	2	E23,E24
77	77		1911341-00	75113 DRIVER,LINE,DUAL,MA	3	E77,E83,E86
78	78		1912107-01	324ANOP AMP,QUAD	1	E49
79	79		1912108-00	339 VOLT CMPRTR,QUAD	3	E5,E36,E56
80	80		1912541-00	79M05 VOLT REG,FIX -5V	1	Q4
81	81		1912697-00	LS174 FF-D HEX W/CLEAR	2	E37,E41
82	82		1912799-00	LS00 NAND-GATE-QUAD 2IN,P	4	E7,E15,E44,E67
83	83		1912801-00	LS02 NOR-GATE-QUAD 2IN	4	E1,E30,E39,E54
84	84		1912803-00	6S04 INVERTER GATE,HEL	2	E79,E80
85	85		1912805-00	LS08 AND GATE-QUAD 2IN,PO	6	E14,E34,E38,E69,E72,E76
86	86		1912807-00	LS10 NAND GATE-TRIPLE 3IN	1	E18
87	87		1912810-00	LS20 NAND GATE-DUAL 4IN	1	E2
88	88		1912813-00	LS27 NOR GATE-TRIPLE 3IN	1	E73
89	89		1912816-00	LS32 OR GATE-QUAD 2IN,POS	4	E17,E35,E59,E84
90	90		1912824-00	LS74 FF-D DUAL,EDGE TRIGG	9	E3,E11,E16,E26,E42,E46,E47,E62,
					CONT	E75
91	91		1912829-00	LS86 X-OR GATE-QUAD 2IN	3	E51,E66,E78
92	92		1912837-00	LS123 ONE SHOT-DUAL,RETRIG	1	E50
93	93		1912854-00	LS193 COUNTER,SYNCHR,4BIT,	3	E27,E28,E43
94	94		1912855-00	LS195 SHIFT REG.,4BIT PARA	5	E19-E22,E25
95	95		1912857-00	LS197 COUNTER,BINARY,PRESET	4	E4,E8,E13,E74
96	96		1912864-00	LS279 LATCH,QUAD-S-R	6	E6,E12,E29,E33,E58,E71
97	97		1913414-00	LS14 INVERTER GATE-HEX SC	2	E40,E48
98	98		1914156-00	LM 393 VOLT.COMPARATOR DUAL	1	E53
99	99		23368A2-00	A2-02,A2-04	1	E52
100	100		23371A2-00	A2-02,A2-04	1	E60
101	101		23444A2-00	A2-02,A2-04	1	E70
102	102		23445A2-00	A2-02,A2-04	1	E32
103	103		9007201-00	TRANSIPADS #10253	1	
104	104		9007791-00	TERM PCB 2POS SOLDER,TURRET	15	TP1-TP4,TP6-TP16
105	105		9009185-00	JUMPER, WIRE, INSULATED, BLACK B	1	W1
106	106		9105740-55	WIRE(WRAP)30AWG UL1423	A/R	
107	107		1012784-00	.047 MFD 50V +80-20% CER	8	C7,C46,C50,C54,C69,C72,C109,C110
108	108		1911324-00	7414 INVERTER,HEX 1IN SCH	1	E64
109	109		1217377-00	TERM QUICK 1POS TAB PC MNT	1	J15
110	110		1005334-00	*** THIS ITEM IS NOT USED ***	-	
111	111		1305608-00	*** THIS ITEM IS NOT USED ***	-	

D	I	G	I	T	A	L	TITLE	SECTION A OF A	SIZE	CODE	DOCUMENT NUMBER	REV
							DRIVE LOGIC		K	PL	5414025-0-DBP	H

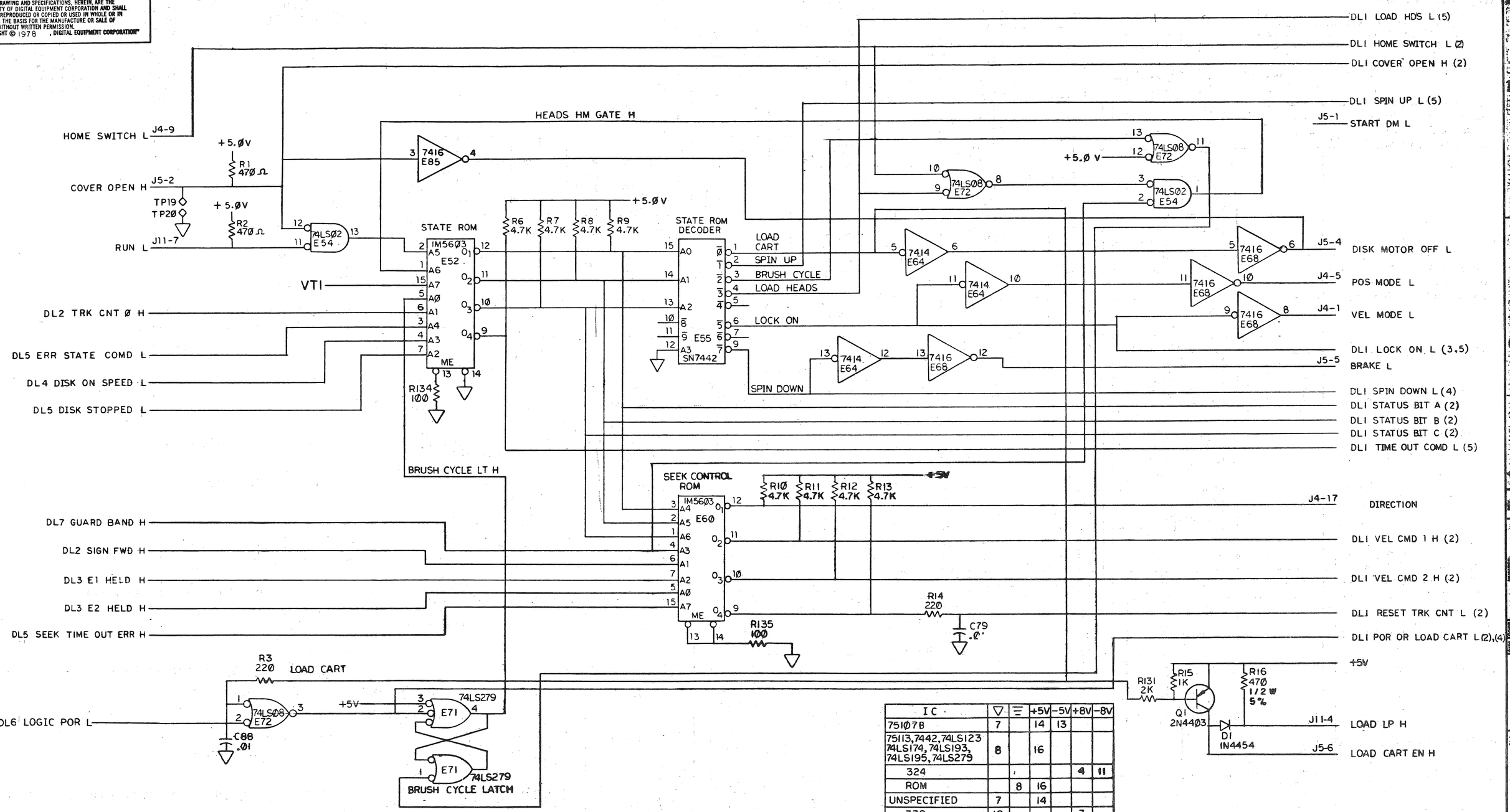

IC	▽	≡	+5V	-5V	+8V	-8V
75107B	7		14	13		
75113,7442,74LS123 74LS174,74LS193, 74LS195,74LS279	8		16			
324					4	11
ROM		8	16			
UNSPECIFIED	7		14			
339	12				3	
339					3	12
339		12			3	

REVISIONS												
REV.	B	C	D	E	F	F1	H	J	K	L	L1
CHANGE NO.	5414025-CX001 M. BROWN	5414025-CX002 M. BROWN	5414025-CX003 M. ZARICH	5414025-CX005 MIKE BROWN	5414025-CX006A MIKE BROWN	5414025-CX008 M. BROWN	5414025-CX009 D.C. 18 AUG 80 M. ZARICH	5414025-CX010A M. BROWN	5414025-CX012 K. DAVIS 24 NOV 80 S. MANDRACCIA	5414025-CX013 D.B. 10 FEB 81 M. ZARICH	5414025-CX014 R.N. 25 FEB 81 M. ZARICH
CHK	5 SEP 79	5 SEP 79	8 JAN 80	11 JAN 80	19 SEP 80		631	19 SEP 80	722	754 11 FEB 81	780

DRN.		5 JUNE 79
CHK'D		3 MAY 80
ENG.		5 JUNE 79
PROJ. ENG.		5 JUNE 79
PROD.		
NEXT HIGHER ASSY.	B-DD-5414025-C	
SCALE	—	
SHEET 1 OF 8		

FIRST USED ON digital

TITLE DRIVE LOGIC (STATE CONTROL LOGIC) (DLI)

SIZE	CODE	NUMBER	REV.
D	CS	5414025-0-1	L1

DIST.

MASTERPIECE P-1499

DEC FORM NO.

CMD 2	CMD 1	MODE	VEL
Ø	Ø	OFF	Ø
Ø	1	GUARD BAND	3 IPS
1	Ø	HEAD LOAD	6 IPS
1	1	HEAD UNLOAD	15 IPS

NOTES:

1. W1 IN FOR RLØ1. W1 OUT FOR RLØ2.
2. W2 NOT FOR FIELD USE. (W2 IS ON DL5 PAGE)
3. J5-17 (SH. 1) MAY BE ACTIVE FROM THE BRUSH DRIVE ASSY, BUT THE BRUSHES CAN BE REMOVED FROM THE DRIVE WHEN USING CS REV H OR LATER.

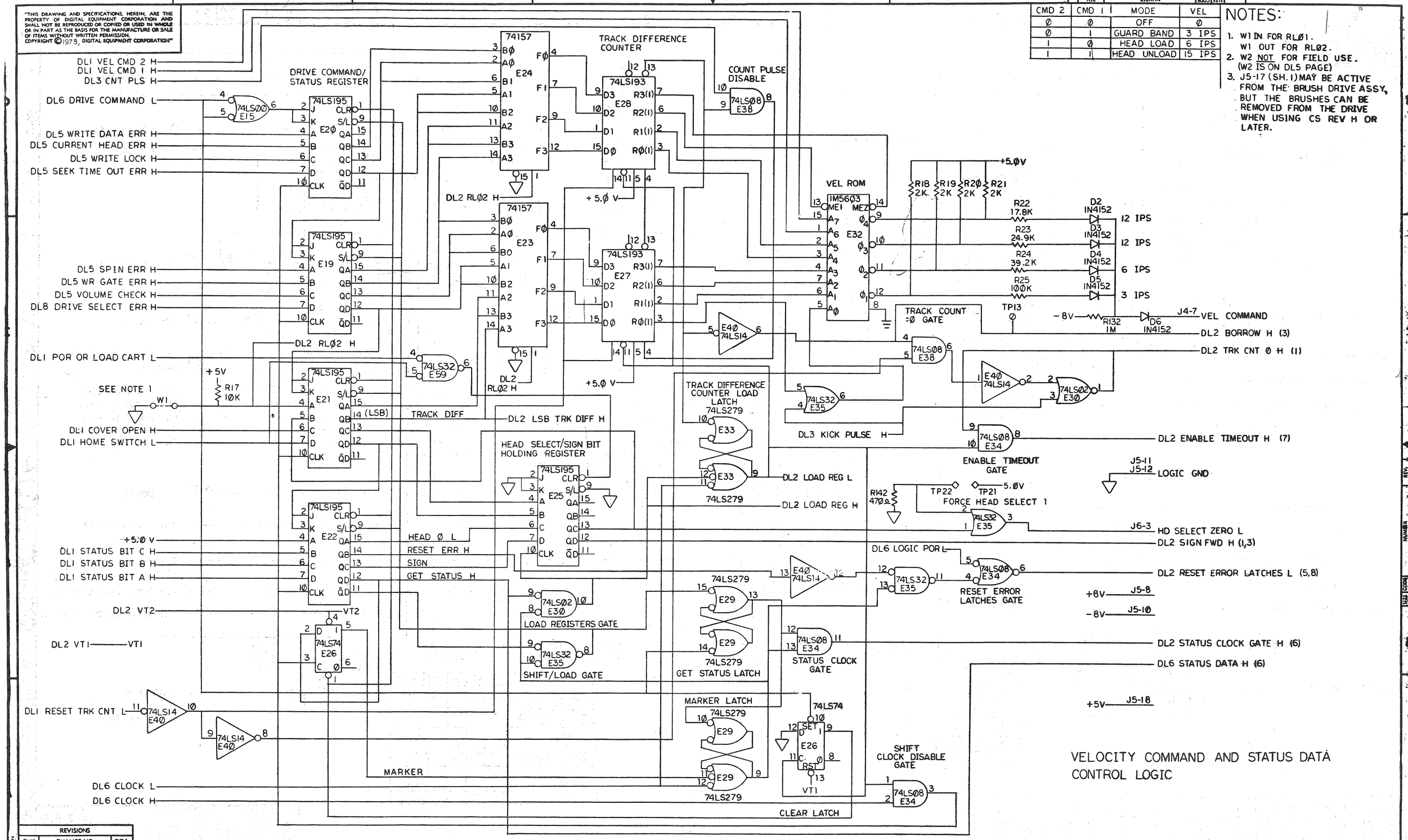

REVISIONS		
CHK	CHANGE NO.	REV.

TITLE	SIZE	CODE	NUMBER	REV.
DRIVE LOGIC (DL2)	D	CS	5414025-0-1	L1
SCALE —	SHEET 2 OF 8	DIST.		

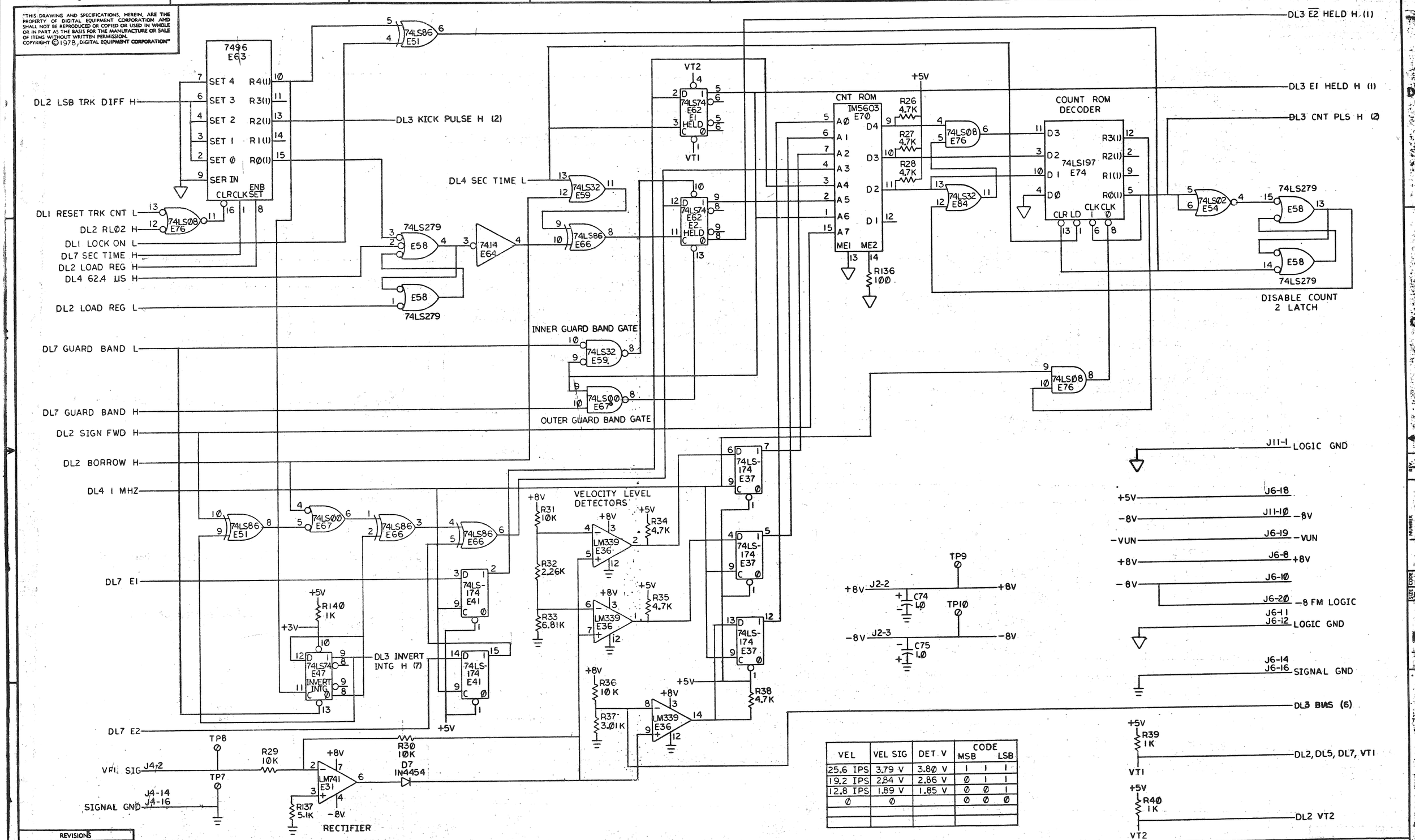

VEL	VEL SIG	DET V	CODE MSB		LSB
25.6 IPS	3.79 V	3.8Ø V	1	1	1
19.2 IPS	2.84 V	2.86 V	Ø	1	1
12.8 IPS	1.89 V	1.85 V	Ø	Ø	1
Ø	Ø		Ø	Ø	Ø

REVISIONS		
CHK	CHANGE NO.	REV.

TITLE DRIVE LOGIC (COUNT LOGIC) (DL3)

SIZE D CODE CS NUMBER 5414025-0-1 REV. L1

SCALE — SHEET 3 OF 8 DIST.

DEC FORM NO. DRD 137

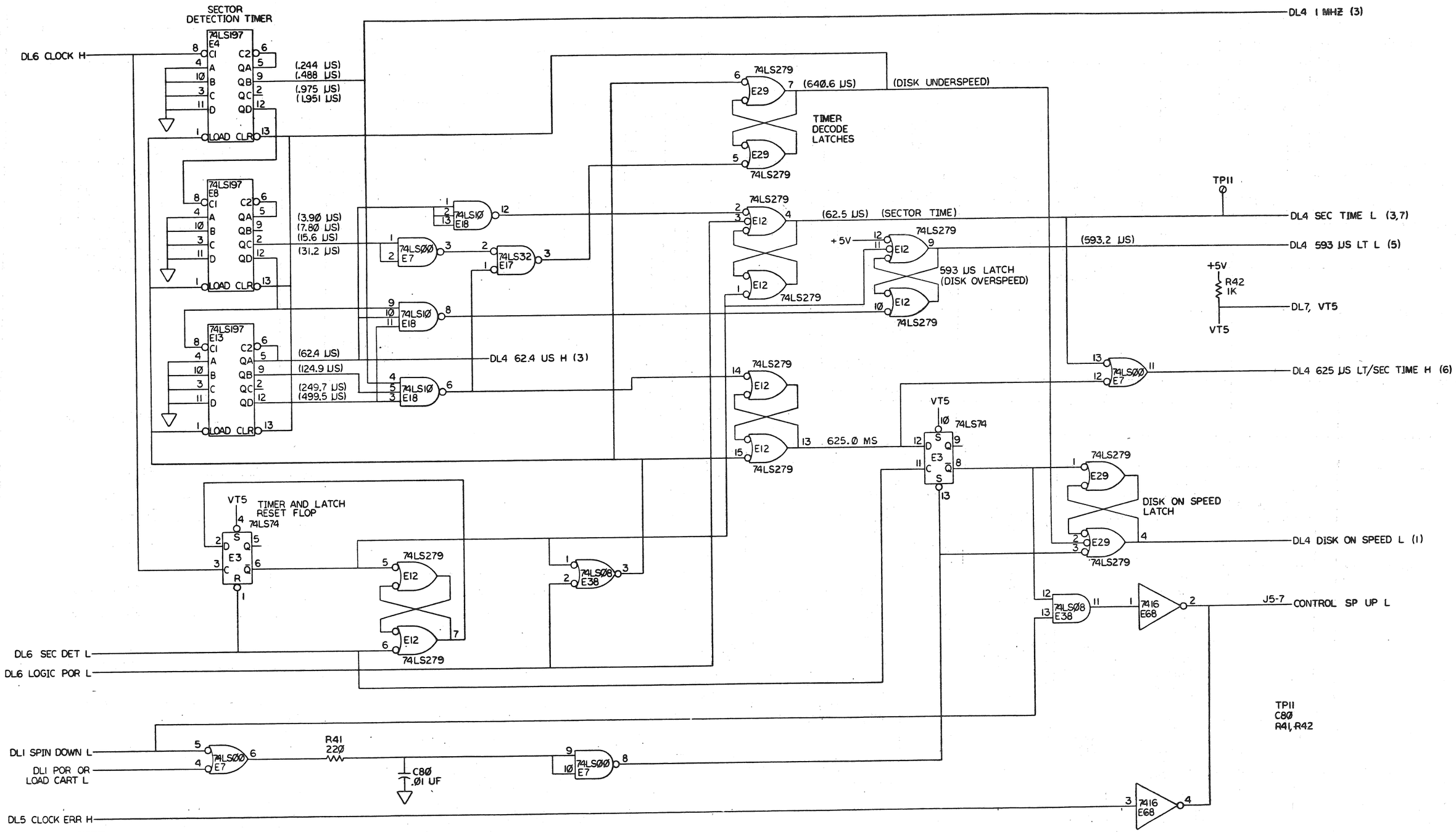

REVISIONS		
CHK	CHANGE NO.	REV.

TITLE DRIVE LOGIC (DISK SPEED CONTROL) (DL4)

SIZE D | CODE CS | NUMBER 5414025-0-1 | REV. L1

SCALE — | SHEET 4 OF 8 | DIST.

DEC FORM NO. BDO 127

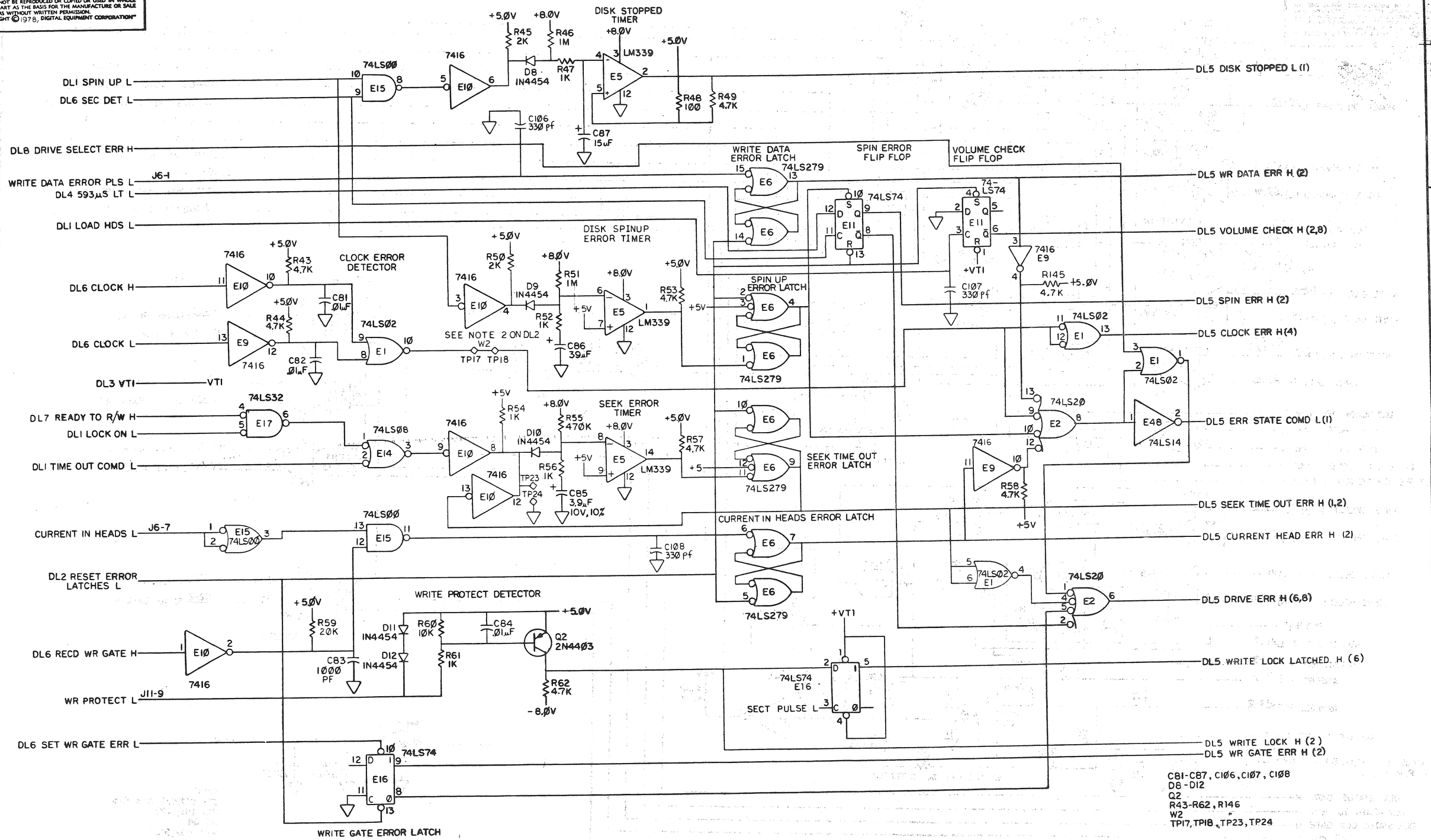

REVISIONS		
CHK	CHANGE NO.	REV.

TITLE	SIZE	CODE	NUMBER	REV.
DRIVE LOGIC (ERROR LOGIC) (DL5)	D	CS	5414025-0-1	L1

SCALE — SHEET 5 OF 8 DIST.

DEC FORM NO. DRD 137

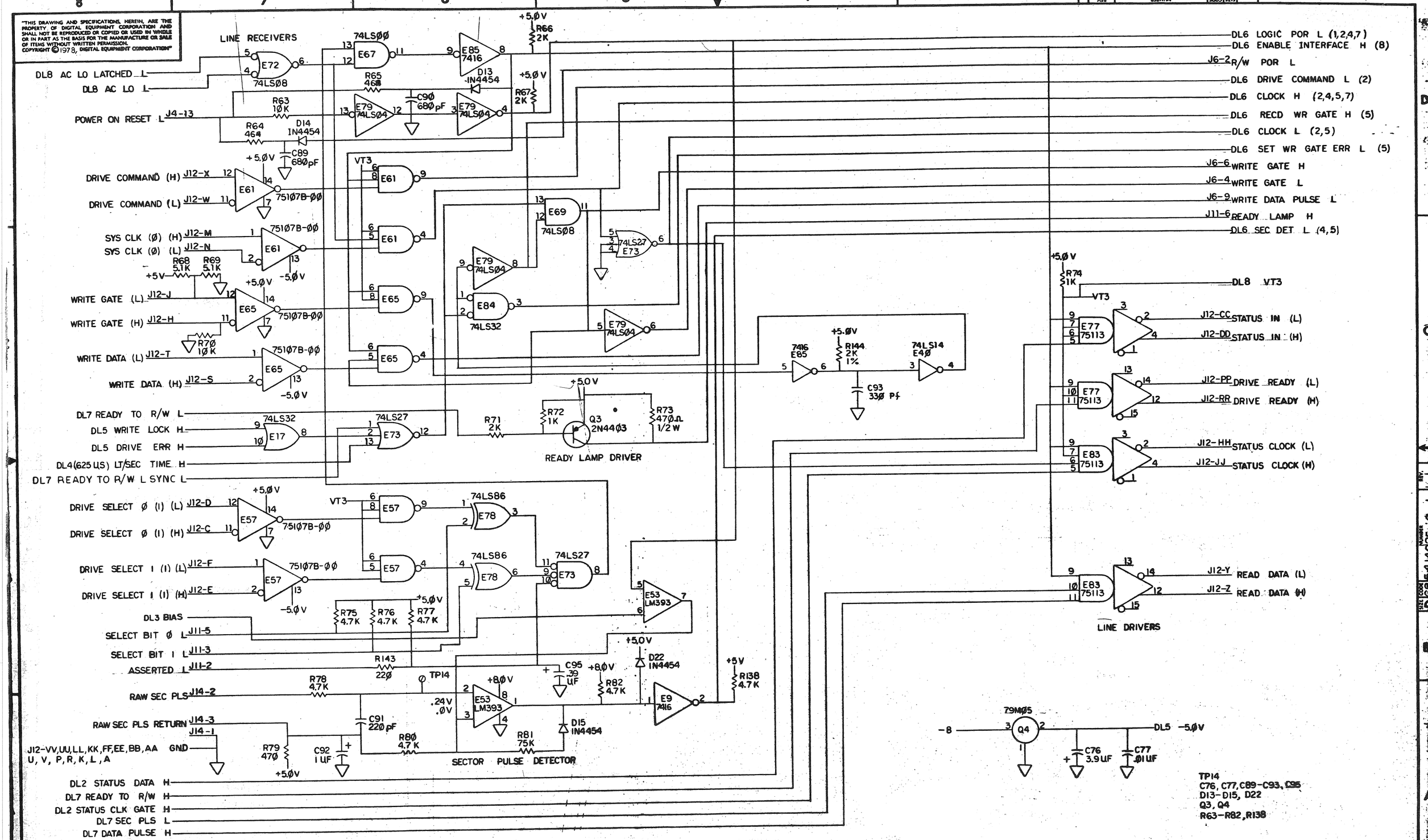

REVISIONS		
CHK	CHANGE NO.	REV.

TITLE DRIVE LOGIC (INTERFACE LOGIC) (DL6)

SIZE D CODE CS NUMBER 5414025-0-1 REV. (L)

SCALE — SHEET 6 OF 8 DIST.

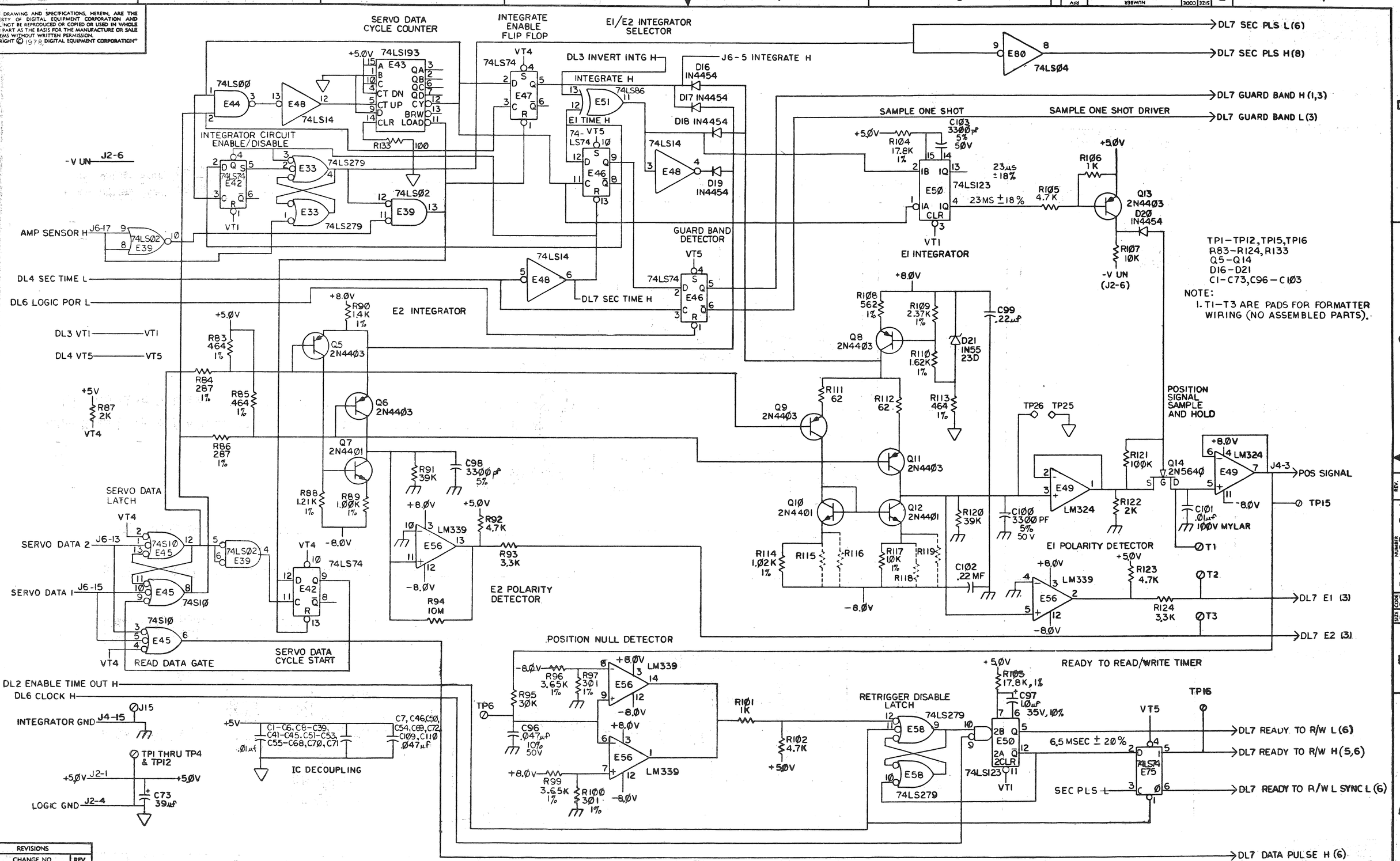

REVISIONS		
CHK	CHANGE NO.	REV.

TITLE	SIZE	CODE	NUMBER	REV.
DRIVE LOGIC (INTEGRATOR LOGIC) (DL7)	D	CS	5414025-0-1	L1
SCALE —	SHEET 7 OF 8		DIST.	

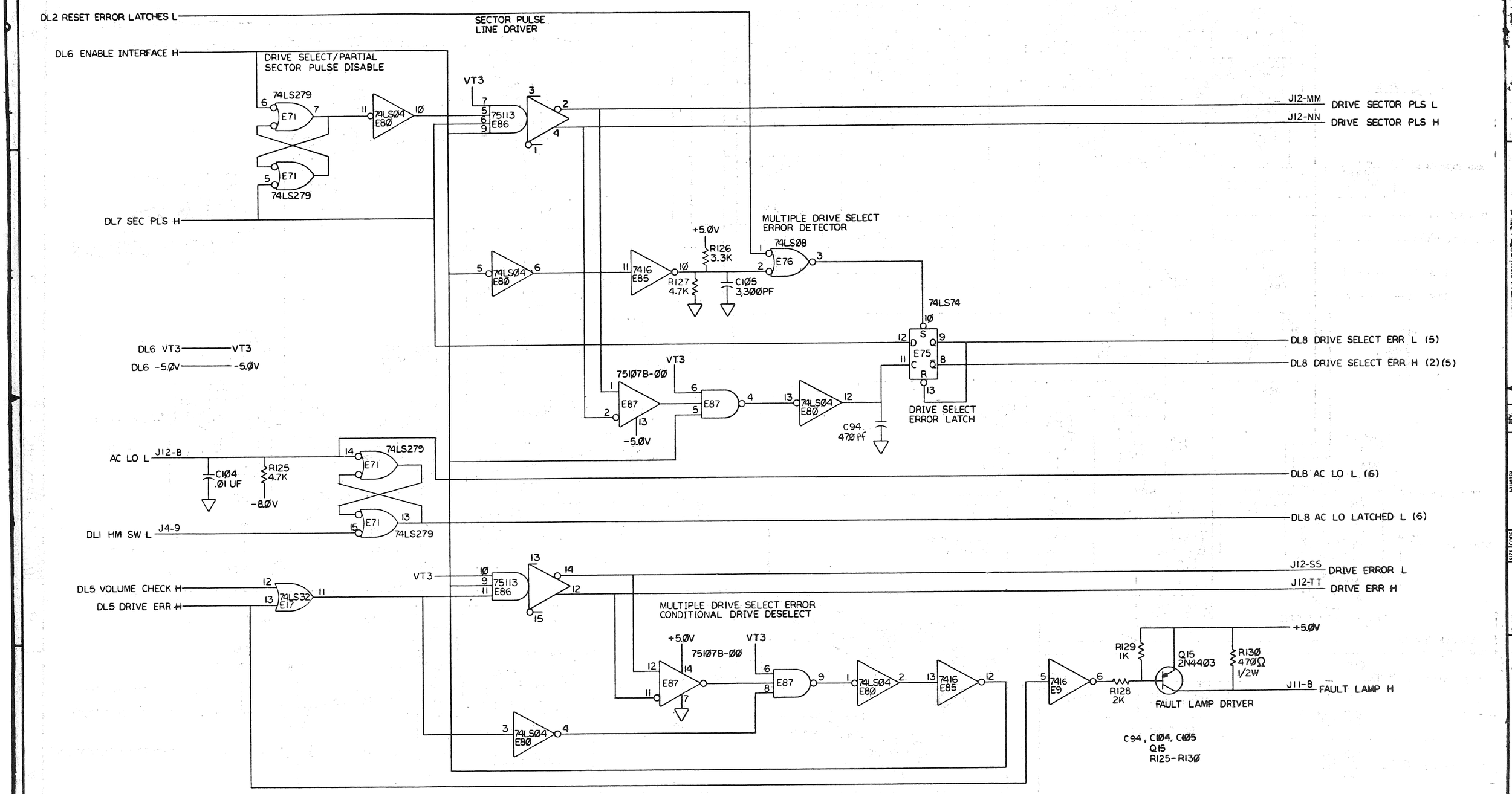

REVISIONS		
CHK	CHANGE NO.	REV.

TITLE	SIZE	CODE	NUMBER	REV.
DRIVE LOGIC (DL8)	D	CS	5414025-Ø-1	L1
SCALE — / —	SHEET 8 OF 8	DIST.		