FIELD MAINTENANCE PRINT SET

TABLE OF CONTENTS

UNIT VARIATIONS COVERED BY THIS PRINT SET
VT1ØØ-AA
VT1ØØ-AB
VT1ØØ-NA
VT1ØØ-NB

VT1ØØ-Ø

Field Maintenance Print Set

Digital Equipment Corporation

PRINT SET ORDER NO.
MP00633

REV. | NUMBER VT1Ø-Ø-1 | CODE TC | SIZE B

REVISIONS			
REV			
CHG. NO.			
DATE			

N/R

USED ON OPTION/MODEL

SHEET 1 OF 1

DRN. B.BLODGETT	DATE 27 OCT 77	TITLE: VT1ØØ UNIT ASSY. (TABLE OF CONTENTS)
CHK'D D.HEALY	DATE 10 APR78	
PROJ. ENG.	DATE 6-26-78	SIZE B / CODE TC / NUMBER VT1ØØ-Ø-1 / REV.
FIELD SERV. for JOHN ZALESKA	DATE 12 JUL78	DIST.

digital

DRB 124

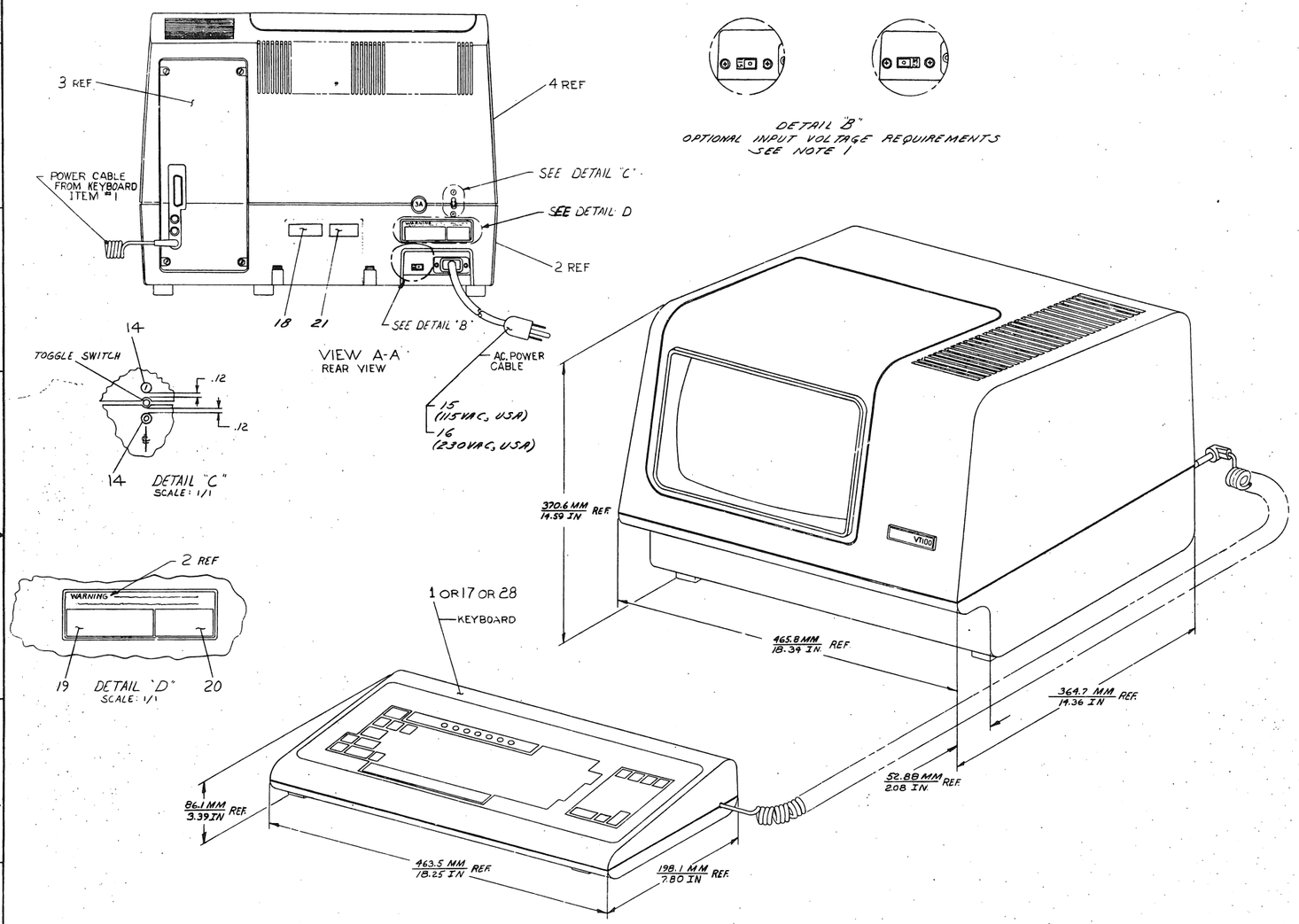

NOTE:

1. ALL VT100 UNIVERSAL TERMINALS ARE SHIPPED SET UP FOR 100-130 VAC. 60HZ OPERATION. TERMINAL IS SWITCH SETABLE FOR 220-240 VAC, 50/60 HZ OPERATION BY SLIDING ACTUATOR TO POSITION SHOWN IN DETAIL B:
2. PACKAGING: WHEN SHIPPED, MATERIAL SHALL BE ADEQUATELY PROTECTED FROM HANDLING AND SHIPPING DAMAGE USING DIGITAL PACKAGING INSTRUCTION A-SP-3700324-0-0.
3. TERMINAL IS SUPPLIED WITHOUT INTERFACE CABLES. ORDER INTERFACE CABLES FOR OPTIONS VT100-AA THRU VT100-DC
4. VARIATIONS OF THE ADVANCED VIDEO OPTION MODULE ARE INCLUDED AS STANDARD EQUIPMENT ON THE FOLLOWING VT100 VARIATIONS:

VT100 VAR	ITEM NUMBER	MODULE PART NUMBER
- WA	29	5413097-01
- WB	29	5413097-01

5. FLYBACK TRANSFORMER FOR ALTERNATE MONITOR, BALL BROTHERS 30145590-0-0 IS MOUNTED TO CHASSIS USING 9009967-00 SCREWS QTY 2. AND CRT IS GROUNDED USING C-MD-7A19936-00 RETAINERS QTY 2.

OFF SHEET PARTS LIST EXISTS
SEE C-PL-VT100-0-0.

QUANTITY & VARIATION	DESCRIPTION	DWG./PART NO.	ITEM NO.

UNLESS OTHERWISE SPECIFIED DIMENSIONS ARE IN INCHES

ANGLES ±0° 30'	CLASS OF ACCURACY (CHECK ONE)	NOMINAL DIMENSION RANGE INCHES					
SURFACE QUALITY IN MICROINCHES		OVER 0 TO 3	OVER 3 TO 6	OVER 6 TO 12	OVER 12 TO 24	OVER 24 TO 48	OVER 48 TO 80
	MEDIUM ☐	±.004	±.008	±.012	±.16	±.024	±.04
	PREFERRED ☐	±.012	±.016	±.025	±.24	±.063	±0

THIRD ANGLE PROJECTION

REMOVE BURRS AND BREAK SHARP CORNERS

DO NOT SCALE DWG

MATERIAL: SEE PARTS LIST

FINISH: — / —

DRN.	J. D. Rodgers	13 Sep 77
CHK'D	[illegible]	[illegible]
ENG.	[illegible]	[illegible]
PROJ. ENGR.	[illegible]	[illegible]
PROD.	C. [illegible]	C-0-24

NEXT HIGHER ASSY.: L DD-VT100-0

SCALE: 1/3

SHEET 1 OF 3

FIRST USED ON: VT100

TITLE: VT100 UNIT ASSY

SIZE: E | CODE: VA | NUMBER: VT100-0-0 | REV.: C

DIST.

CHN	CHANGE NO.	REV.
[illegible]	[illegible]	[illegible]
[illegible]	[illegible]	[illegible]
[illegible]	[illegible]	[illegible]
[illegible]	[illegible]	[illegible]
[illegible]	[illegible]	[illegible]
[illegible]	[illegible]	[illegible]
[illegible]	[illegible]	[illegible]
[illegible]	[illegible]	[illegible]

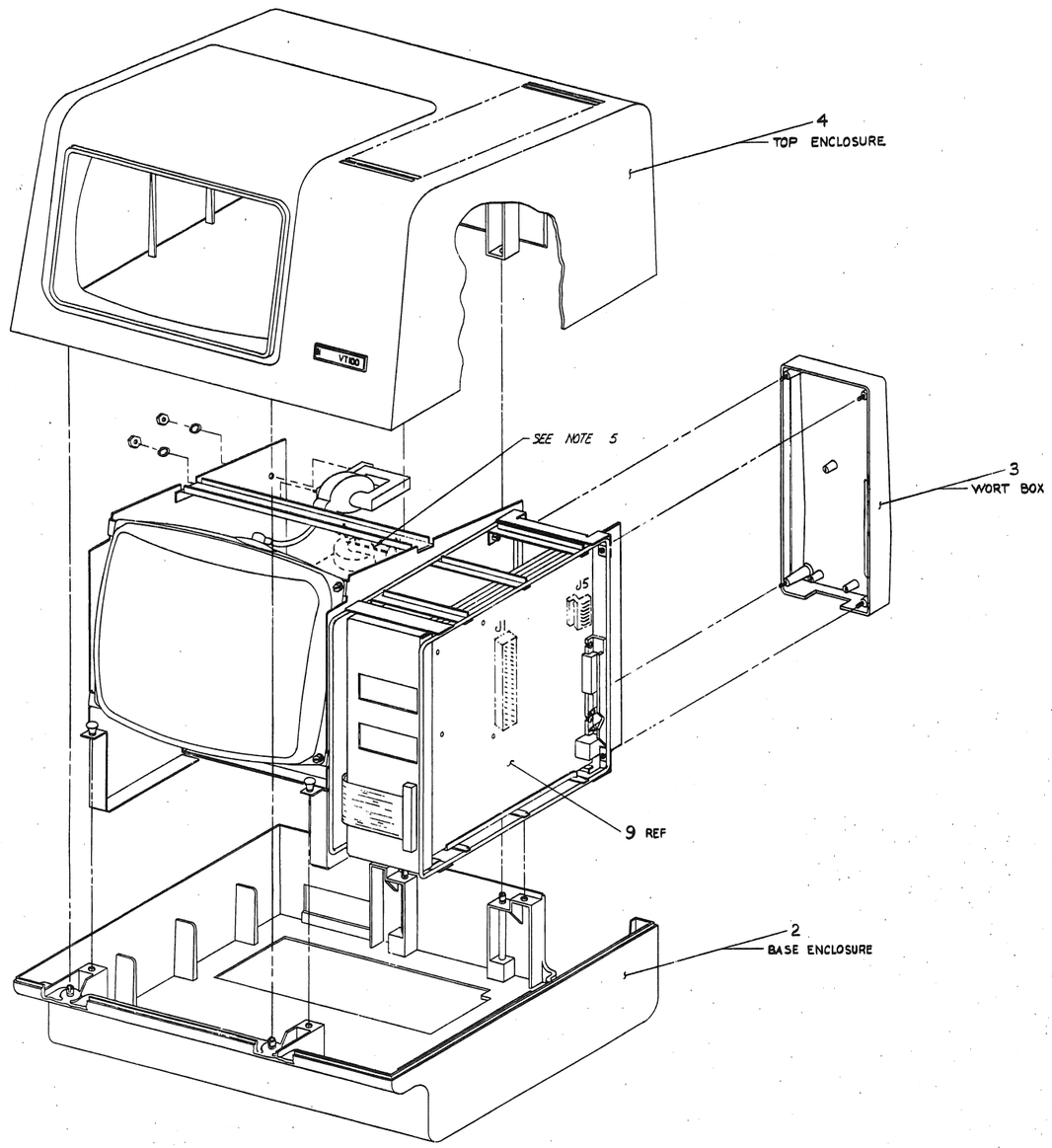

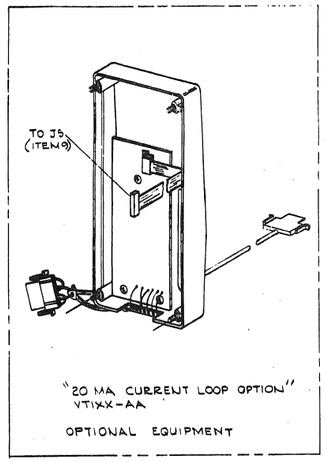

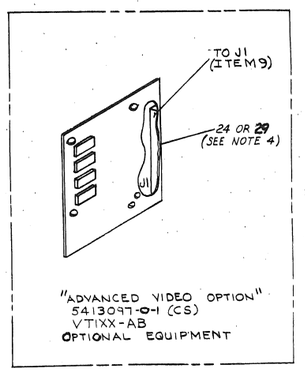

DESCRIPTION		DWG./PART NO.	ITEM NO.
UNLESS OTHERWISE SPECIFIED DIMENSIONS ARE IN INCHES			
DECIMALS ±0.005	CLASS OF ACCURACY (CHECK ONE)	NOMINAL DIMENSION RANGE INCHES	
BURRS QUALITY IN ✓	MEDIUM	0 TO 6 / 6 TO 18 / 18 TO 30 / 30 TO 120 / 120 TO 480 / 480 TO 960	
MICROINCHES	PREFERRED	±.004 / ±.008 / ±.015 / ±.016 / ±.031 / ±.04	
		±.012 / ±.016 / ±.025 / ±.06 / ±.062 / ±.06	

QUANTITY & VARIATION

THIRD ANGLE PROJECTION

REMOVE BURRS AND BREAK SHARP CORNERS

DO NOT SCALE DWG

MATERIAL SEE PARTS LIST

FINISH — —

DRN. G. B. Lodge 8-Jan-77
CHK'D Hal Lynch 13-77
ENG. [illegible] Jan 77
PROJ. ENG. [illegible] 11-5-77
PROD. [illegible] 5-9-78

NEXT HIGHER ASSY. B-DD-VTIØØ-Ø

SCALE 1/2

SHEET 2 OF 3

FIRST USED ON VTIØØ

TITLE VTIØØ UNIT ASSY

SIZE E CODE JA NUMBER VTIØØ-Ø-Ø REV. C

DIST.

REVISIONS: REV. | CHANGE NO. | CHK.

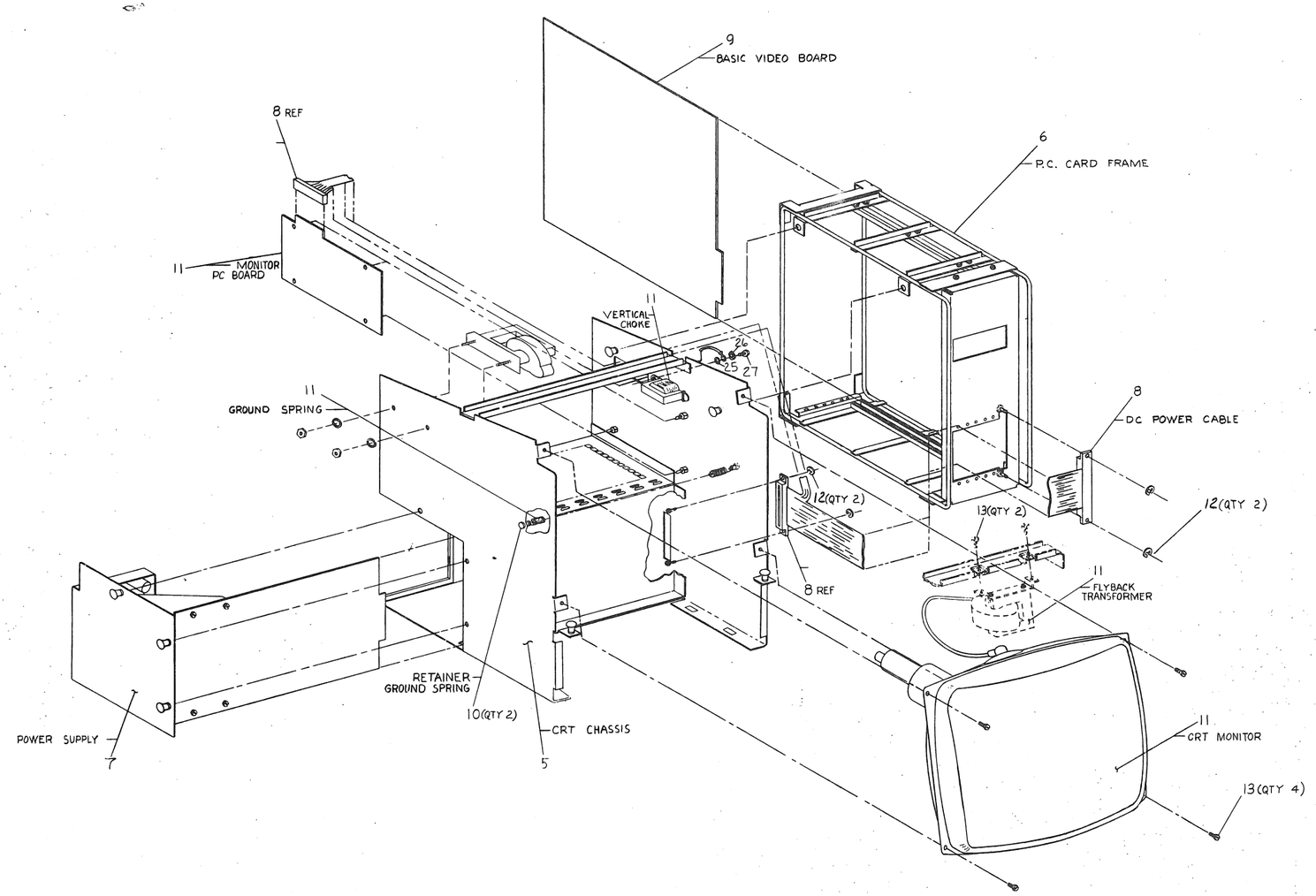

QUANTITY & VARIATION	DESCRIPTION	DWG./PART NO.	ITEM NO.

UNLESS OTHERWISE SPECIFIED DIMENSIONS ARE IN INCHES

ANGLES ±0° 30'	CLASS OF ACCURACY (CHECK ONE)	NOMINAL DIMENSION RANGE INCHES					
		0 TO 6	OVER 6 TO 30	OVER 30 TO 120	OVER 120 TO 480	OVER 480 TO 60.0	
SURFACE QUALITY ✓ MICROINCHES	MEDIUM ☐	±.005	±.010	±.01	±.015	±.02	±.03
	PRESERVED ☐	±.010	±.010	±.015	±.01	±.020	±.03

THIRD ANGLE PROJECTION

REMOVE BURRS AND BREAK SHARP CORNERS

DO NOT SCALE DWG.

MATERIAL: SEE PARTS LIST

FINISH: — / —

DRN. 8 Aug 77
CHK'D 8 Aug 77
ENG. 8 Aug 77
PROJ. ENG. 8-10-77
PROD. 8 Aug 77

NEXT HIGHER ASSY. B-DD-VTIØØ-Ø

SCALE 1/2

SHEET 3 OF 3

FIRST USED ON VTIØØ

TITLE VTIØØ UNIT ASSY

digital

SIZE E | CODE 1A | NUMBER VTIØØ-Ø-Ø | REV. -

DIST.

CODE	CHANGE NO.	DESCRIPTION	REV.

			VT1Ø7-AA	VT1Ø7-AB	VT1Ø7-NA	VT1Ø7-NB	VT1Ø8-WA	VT1Ø8-WB
1	D-UA-7014653-00-0	KEYBOARD ASSY. W/AUX. KEYPAD	1	1	-	-	-	-
2	E-IA-7014980-00-0	BASE ENCLOSURE ASSY. (CRT)	1	1	1	1	1	1
3	D-IA-7014976-00-0	WORT BOX ASSY.	1	1	1	1	1	1
4	D-IA-7014974-00-0	ENCLOSURE TOP ASSY (CRT)	1	1	1	1	1	1
5	D-IA-7014975-00-0	CHASSIS ASSY. CRT	1	1	1	1	1	1
6	D-AD-7014977-00-0	FRAME, P.C. CARD ASSY.	1	1	1	1	1	1
7	D-AD-7014979-00-0	POWER SUPPLY H7831, 115V, 230V/50,60 HZ	1	1	1	1	1	1
8	D-IA-7014978-00-0	D.C. POWER CABLE	1	1	1	1	1	1
9	D-UA-5413009-00-0	BASIC VIDEO BOARD ASSY.	1	1	1	1	1	1
~~10~~	~~C-AD-7412896-00-0~~	~~RETAINER STUDS STRING~~	~~2~~	~~2~~	~~2~~	~~2~~	~~2~~	~~2~~
11	3016080-00	CRT MONITOR	1	1	1	1	1	1
12	9010007-00	RETAINING RING	-	4	4	4	4	4
13	9009967-00	SCR. SLOTTED HEX HD =6 - 32 X .31 (SEMS)	8	8	8	8	8	8
14	3615680-00	LABEL, SWITCH POSITION	1	1	1	1	1	1
15	A-PS-1700083-09	LINE CORD (115 VAC) USA	1	-	1	-	1	-
16	A-PS-1700083-10	LINE CORD (230 VAC) USA	-	1	-	1	-	1
17	D-UA-7014653-C2-0	KEYBOARD ASSY. (DECFORM KEYCAP)	-	-	1	1	-	-
18	A-DC-7414213-00-0	LABEL (U.L.)	1	1	1	1	1	1
19	A-PS-3613210-01	LABEL, ELECTRICAL DATA	1	1	1	1	1	1
20	A-PS-3613210-02	LABEL, ELECTRICAL DATA	1	1	1	1	1	1
21	A-PS-3613211-01	LABEL (CSA)	1	1	1	1	1	1
22	A-SP-370032144-00	PACKAGING INSTRUCTIONS	1	1	1	1	1	1
23	E-UA-VT1XX-AA-Ø	20 MA CURRENT LOOP ADAPT.(OPTIONAL)	REF	REF	REF	REF	REF	REF
24	VT1XX-AB-Ø	ADVANCED VIDEO BOARD (OPTIONAL)	REF	REF	REF	REF	REF	REF
25	9006659	WASHER, FLAT #6	1	1	1	1	1	1
26	9007649	WASHER, EXT. TOOTH, LOCK	1	1	1	1	1	1
27	9010112	SCREW, #6 x 3/8"	1	1	1	1	1	1
28	E-UA-7014653-03-0	KEYBOARD ASSY. (WORD PROCESSING KEYCAP).	-	-	-	-	1	1
29	D-CS-5413097-01	WORD PROCESSING ADVANCED VIDEO MODULE	-	-	-	-	1	1
30	9009313-01	SUPPORT CIRCUIT BOARD	-	-	-	-	4	4
	9009946-02	PLASTIC CASE LATCHES (10 PR)						

REVISIONS			
CHK	CHANGE NO.		REV.
ER	VT100 - ML001	R. Blodgett 26 Oct 78	A
		L. KING	
		L. King 13 Nov 78	
ER	VT100 - ML002		B
		J. BITTO	
		Richard Pucci 1-23-79	
JH	VT100 - PN003		C
		2-19-79	
		L. KING	
		G. Chi-Fanden (E.K.) 5 Mar. '79	
JH	VT100 - PN011		D
		6-19-79	
		J. BITTO	
		(Jc.)	

MAKEPEACE P-1655

DEC FORM NO. DRC 110 A

DRN. B.BLODGETT	3 SEPT 77	FIRST USED ON VT1ØØ
CHK'D D.HEALY	24 SEPT 78	digital
ENG.	26 JUN 78	TITLE VT1ØØ UNIT ASSY.
PROJ. ENG.	6-26-78	
PROD.	7 Jul 78	
NEXT HIGHER ASSY. E-UA-VT1ØØ-Ø-Ø		SIZE C · CODE PL · NUMBER VT1ØØ-Ø-Ø · REV. D
SCALE —		
SHEET 1 OF 1		DIST.

REV. D · NUMBER VT1ØØ-Ø-Ø · CODE PL · SIZE C

REWORK INSTRUCTIONS

ECO #1

COMPONENT ADD SIDE 1:

1-1 ADD C99 (1010274-01) AS FOLLOWS:

A. DRILL ONE .038 HOLE ABOVE E32-16, AS CLOSE AS POSSIBLE TO E32-16

B. INSERT ONE LEAD THROUGH THIS HOLE AND TACK SOLDER TO E32-16 ON SIDE 2

C. INSERT SECOND LEAD THROUGH PTH ABOVE E32-1 TACK SOLDER TO ETCH AT THIS PTH.

1-2 ADD C95 (1010274-01) AS FOLLOWS:

A. DRILL ONE .038 HOLE IMMEDIATELY LEFT OF E32-6 AS CLOSE AS POSSIBLE TO E32-8

B. INSERT ONE LEAD THROUGH THIS HOLE AND TACK SOLDER TO E32-8 ON SIDE 2

C. INSERT SECOND LEAD THROUGH PTH IMMEDIATELY LEFT OF E32-5 AND E32-6 AND TACK SOLDER TO ETCH AT THIS PTH

ECO #2

COMPONENT DELETE SIDE 1

2-1 R56

ETCH CUTS SIDE 1:

2-2 BETWEEN J3-26 AND J3-33

WIRE ADD - SIDE 1:

2-3 FROM J3-26 TO C28 (-12V)

2-4 FROM J3-32 TO C13 (-12V)

2-5 FROM J3-34 TO E8-8

2-6 ADD JUMPER WIRE W2 IN PLACE OF R56.

ECO #4

ETCH CUTS SIDE 1:

4-1 BETWEEN E39 PINS 4 & 5.

4-2 BETWEEN E39 PINS 9 & 10.

WIRE ADDS SIDE 1:

4-3 FROM E39-PIN 4 TO E39-PIN 7.

4-4 FROM E39 PIN 10 TO THE GROUND FEEDTHRU JUST ABOVE E38-PIN 1.

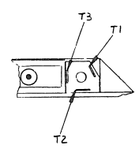

VIEW A

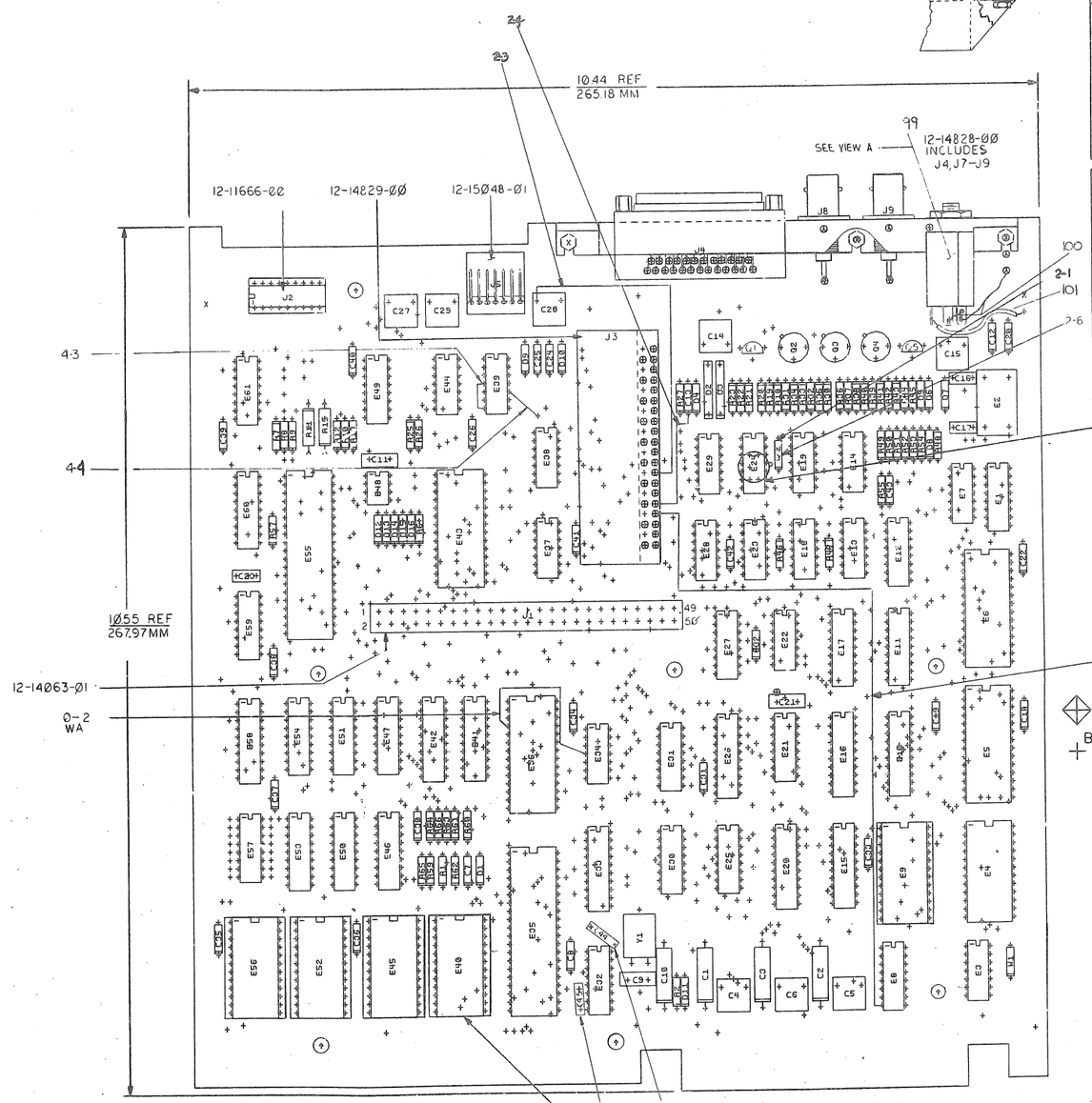

FIRST RELEASE

ETCH CUTS - SIDE 2

0-1 BETWEEN E34-4 & FEEDTHRU HOLE LOCATED BETWEEN E31 & E34

WIRE ADDS

0-2 BETWEEN E34-4 & E36-4

NOTES: E24 PT#2114524 CAN BE EITHER THE 14 PIN DIP OR THE 8 PIN ROUND IC

digital

TITLE VT100 BASIC VIDEO

SIZE E CODE UA NUMBER 54130069-0-0

REV

SCALE 2:1

SHT 1 OF 3

NEXT HIGHER ASSY: B 70-54130069-0

ETCH REV.

P.C. DESIGN DATA BASE REV.

CHK CHANGE NO. REV

54130069-0-0

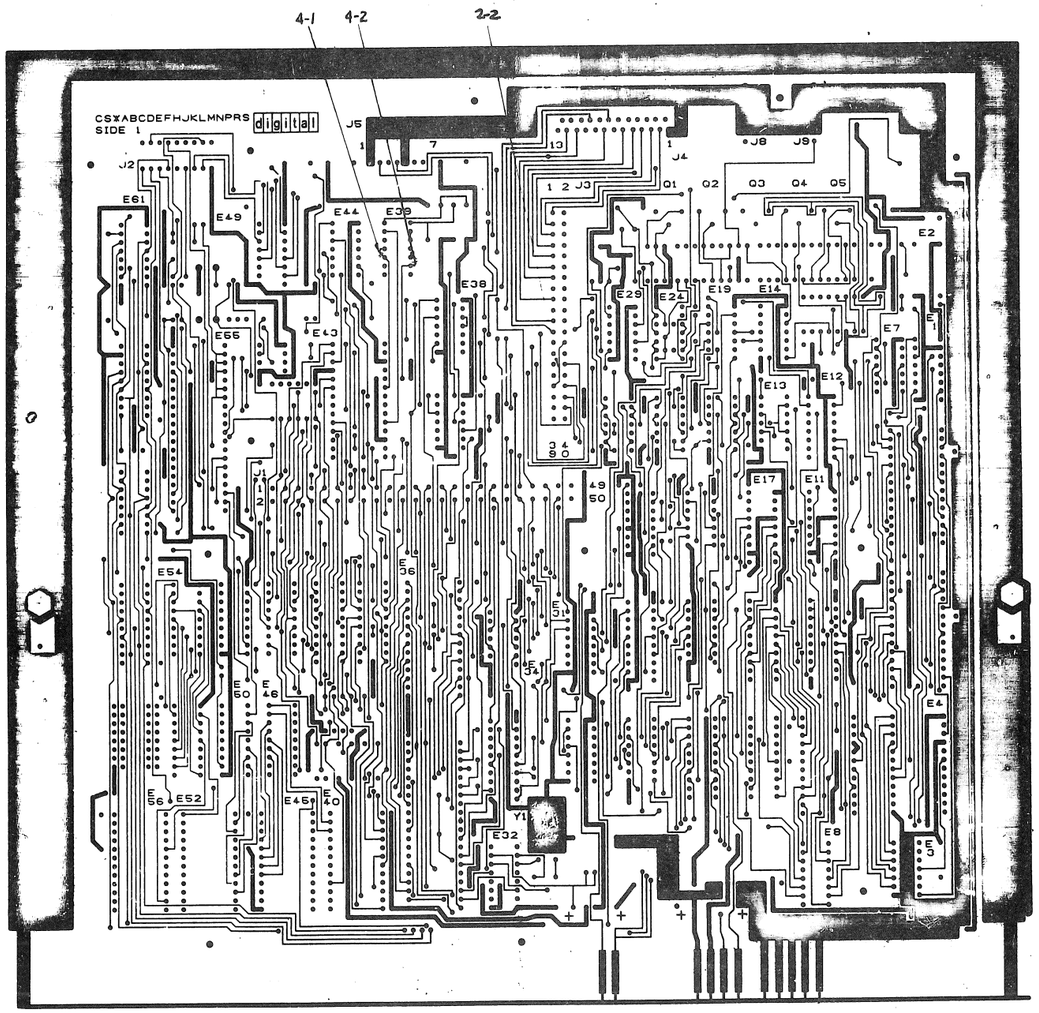

REVISIONS		
CHK	CHANGE NO.	REV.

TITLE VT100 BASIC VIDEO

SIZE E | CODE | NUMBER UA5413009-0-0 | REV.

SCALE 2/1 | SHEET 2 OF 3 | DIST

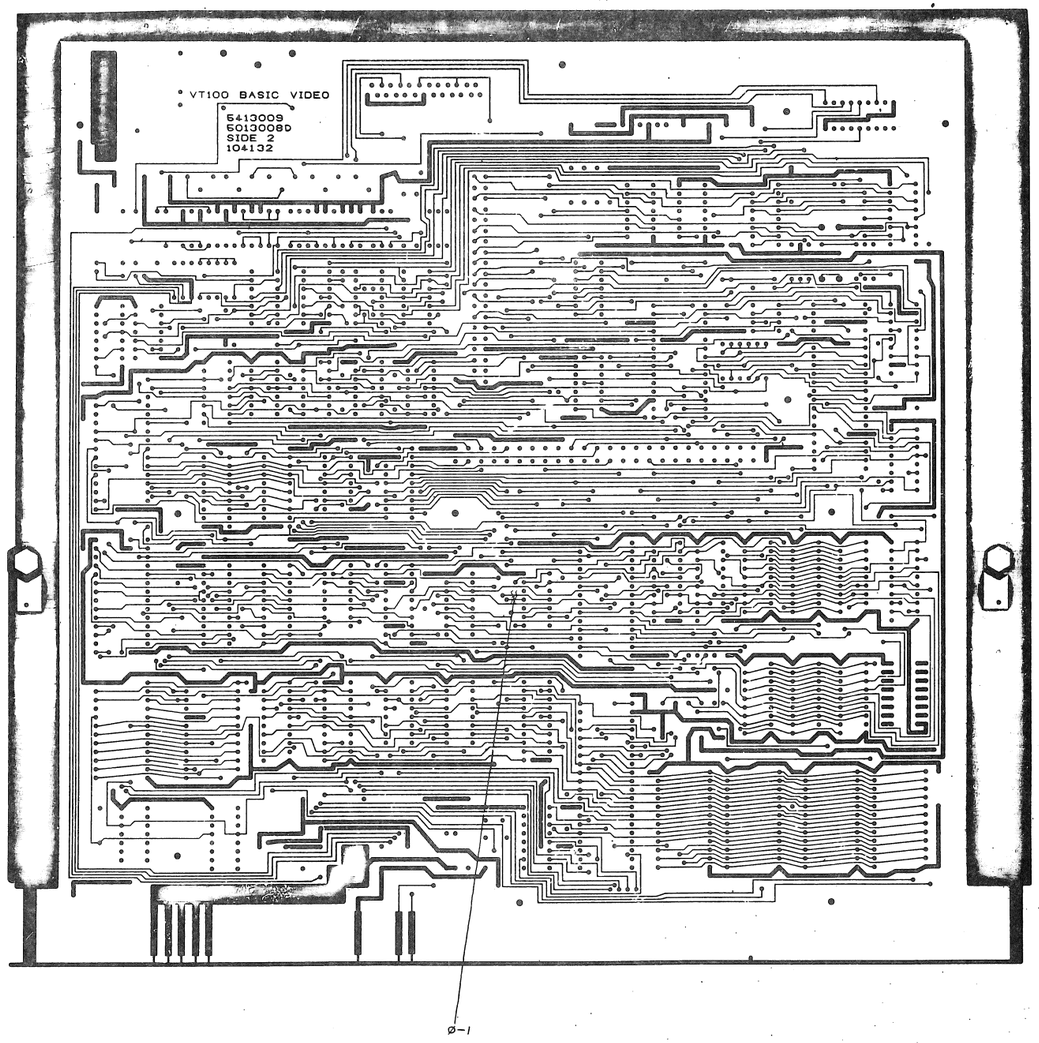

REVISIONS		
CHK	CHANGE NO	REV

TITLE VT100 BASIC VIDEO

SCALE 2:1 SHEET 3 OF 3

SIZE E CODE UA NUMBER 5413009-0-0

DIST

P A R T S L I S T

LINE	ITEM	DOCUMENT NUMBER	PART NUMBER	DESCRIPTION	QTY PER VARIATION 00	REFERENCE DESIGNATOR
1	1	D-MD-5013008-0-0	5013008-00	VT100 BASIC VIDEO	1	
2	2		1000005-00	6.8 MMF 100V 5%200PPM DM15S	1	C9
3	3		1000014-00	68.0 MMF 100V 5%200PPM DM15S	1	C11
4	4		1000016-00	100.0 MMF 100V 5%200PPM DM15S	1	C21
5	5		1000076-00	39 MFD 10V 10% 150D S.TA	1	C10
6	6		1001610-01	.01 MFD 100V -20+80 Z5U DISC	3	C16,C17,C23
7	7		1005306-00	6.8MFD 35V 10% S.TANT	3	C1,C2,C3
8	8		1010274-01	.22 MFD 50V -20+80 Z5U CER	10	C4-C6,C14,C15,C27-C29,C44,C45
9	9		1012784-00	.047 MFD 50V -20+80 CER	24	C7,C8,C12,C13,C18,C19,C20,C22,
						CONT C24,C25,C30-C43
10	10		1013466-12	2200.0 MMF 50V 10%	1	C26
11	11		1100114-00	D 664 QS\75PCB PIV= 25V SP	11	D4-D8,D11-D16
12	12		1105796-00	1N 4004 PIV=400 I= 1A D041 SP	2	D9,D10
13	13		1109502-02	1N 4742A VZ= 12.0 5% 1W	1	D3
14	14		1110994-00	1N 751A VZ= 5.1 5% .40W	1	D1
15	15		1114974-00	1N 4741A VZ= 11.0 5% 1W	1	D2
16	16		1210693-00	/REPLACED BY 12-15006-05	5	XE9,XE40,XE45,XE52,XE56
17	17		1211666-00	SOCKET 18PIN IC LOW PROFILE	1	J2
18	18		1214063-01	HEADER.150 50POS STRAIGHT	1	J1
19	19		1214828-00	CONN, 25POS RCPT	1	J4
20	20		1214829-00	CONN 40POS RT ANGLE	1	J3
21	21		1215048-01	CONN 7POS RT ANGLE	1	J5
22	22		1300005-07	R NETWORK 15-4.7K RESISTORS 5% 1	3	E8,E12,E59
23	23		1300219-00	68 1/4W 5% CC	1	R40
24	24		1300229-00	100 1/4W 5% CC	2	R34,R42
25	25		1300250-00	150 1/4W 5% CC	1	R51
26	26		1300271-00	220 1/4W 5% CC	1	R41
27	27		1300295-00	330 1/4W 5% CC	2	R46,R47
28	28		1300315-00	470 1/2W 5% CC	1	R11

REVISION HISTORY			BASIC PART NO: 5413009
ENG	ECO NUMBER	REV	SECTION A OF A
---	INIT	B	SECTION.VARIATION INDEX
LT	ML001	C	[A] 00
R.P	5413009-ML002	D	[B]
N.F	5413009-ML004	F	[C]
R.P	5413009-ML005	H	[D]
			[E]
			[F]
			[H]
			[J]
			[K]
			[L]
			[M]
			[N]

DRN:	T. SHETRAWSKI	DATE: 30-MAR-78
CHK'D:	T. SHETRAWSKI	DATE: 11-MAR-78
DES.ENG:	D. PUCCI	DATE: 30-MAR-78
RESP.ENG.:	D. PUCCI	DATE: 30-MAR-78
MFG.ENG.:	T. CORCIARI	DATE: 30-MAR-78
ASSEMBLY NUMBER: E-UA-5413009-0-0	TOP DOCUMENT NUMBER: VT100	

D I G I T A L

TITLE PARTS LIST

VT100 BASIC VIDEO

DOCUMENT NUMBER

SIZE	CODE	NUMBER	REV
K	PL	5413009-0-DBP	H

FILE NAME: Z0211H.PLS

EDIT # 14

LINE	ITEM	DOCUMENT NUMBER	PART NUMBER	DESCRIPTION	QTY PER VARIATION 00	REFERENCE DESIGNATOR
29	29		1300316-00	470 1/4W 5% CC	2	R44,R55
30	30		1300365-00	1 K 1/4W 5% CC	2	R1,R36
31	31		1300398-00	1.8 K 1/4W 5% CC	1	R31
32	32		1300417-00	2.2 K 1/4W 5% CC	6	R18,R19,R20,R21,R23,R27
33	33		1300426-00	2.7 K 1/4W 5% CC	1	R7
34	34		1300447-00	4.7 K 1/4W 5% CC	1	R26
35	35		1300479-00	10 K 1/4W 5% CC	5	R2,R6,R12,R22,R25
36	36		1301317-00	10 1/4W 5% CC	1	R57
37	37		1301422-00	7.5 K 1/4W 5% CC	8	R59-R66
38	38		1301424-00	680 1/4W 5% CC	1	R37
39	39		1301425-00	300 1/4W 5% CC	1	R50
40	40		1301475-00	1.1 K 1/4W 5% CC	2	R30,R32
41	41		1301808-00	22 K 1/4W 5% CC	1	R10
42	42		1301874-00	5.6 K 1/4W 5% CC	1	R9
43	43		1301972-00	270 1/4W 5% CC	1	R38
44	44		1302379-00	75 1/4W 5% CC	4	R35,R45,R52,R54
45	45		1302391-00	20 K 1/4W 5% CC	2	R43,R48
46	46		1302465-00	18 K 1/4W 5% CC	1	R13
47	47		1303178-00	620 1/4W 5% CC	1	R49
48	48		1303187-00	820 K1/4W 5% CC	1	R8
49	49		1304833-00	1.96 K 1/4W 1% RN55D-F 100PPM	1	R15
50	50		1311522-00	200 1/4W 5% CC	1	R33
51	51		1313580-00	360 1/4W 5% CC	1	R39
52	52		1314673-00	36 1/4 5% CC	1	R53
53	53		1501913-00	2N 2904A PNP 600MW SI 60 40 Y	3	Q2,Q3,Q4
54	54		1503409-00	DEC6534D PNP 310MW SI 40 90	1	Q1
55	55		1509524-00	2N 3904 NPN 310MW SI 40 40 M	1	Q5
56	56		1810694-06	XTAL 24.8832 MHZ	1	Y1
57	57		1814830-00	OSCILLATOR, CRYSTAL 24.073 MHZ	1	E2
58	58		1909686-00	7404 INVERTER GATE-HEX 1I	1	E38
59	59		1909928-00	7416 INVERTER GATE-HEX 1I	2	E14,E18
60	60		1909929-00	7417 BUFFER GATE-HEX 1INP	1	E29
61	61		1910236-00	DEC 7426 NAND GATE-QUAD 2IN,O	1	E7
62	62		1910322-00	DEC 1488L DRIVER,LINE,QUAD,EI	1	E39
63	63		1910548-00	74S157 MUX 1 OF 2 (QUAD)	1	E1
64	64		1912697-00	LS174 FF-D HEX W/CLEAR	2	E49,E61
65	65		1912799-00	LS00 NAND-GATE-QUAD 2IN,P	2	E23,E34
66	66		1912803-00	LS04 INVERTER GATE-HEX 1I	1	E19
67	67		1912815-00	LS30 NAND GATE-SINGLE 8IN	1	E3
68	68		1912818-00	LS38 NAND BUFFER-QUAD 2IN	1	E28
69	69		1912824-00	LS74 FF-D DUAL,EDGE TRIGG	2	E13,E22
70	70		1912842-00	LS138 DECODER-THREE INPUT,	1	E27
71	71		1912843-00	LS139 DECODER, 2 OF 4(DUAL	1	E31
72	72		1912854-00	LS193 COUNTER,SYNCHR,4BIT,	3	E21,E25,E30
73	73		1912863-00	LS273 FF-D OCTAL W/CLEAR	2	E16,E20
74	74		1913105-00	PB 8224C DRIVER/GEN CLOCK F	1	E32
75	75		1913109-00	8228 BUFFER,DATA BASE FOR	1	E36

DIGITAL	TITLE	SECTION	SIZE	CODE	DOCUMENT NUMBER	REV
	VT100 BASIC VIDEO	A OF A	K	PL	5413009-0-DBP	H

P A R T S L I S T

LINE	ITEM	DOCUMENT NUMBER	PART NUMBER	DESCRIPTION	QTY PER VARIATION 00	REFERENCE DESIGNATOR
76	76		1913130-00	DEC 1489A RECEIVER,LINE,QUAD,	2	E37,E44
77	77		1914084-00	74S299 SHIFT REG.,8BIT RIGH	1	E10
78	78		1914156-00	LM 393 VOLT.COMPARATOR DUAL	1	E48
79	79		1914213-00	81LS97 BUFFER GATE-OCTAL 2I	4	E15,E41,E42,E58
80	80		1914214-00	LS374 FF-D OCTAL EDGE TRIG	2	E26,E33
81	81		1914423-00	DC 011 CUSTOM LSI-BIPOLAR LS	1	E6
82	82		1914424-00	DC 012 CUSTOM LSI-BIPOLAR L	1	E5
83	83		2112623-02	DUAL BAUD RATE GEN/PROG DIVIDER	1	E60
84	84		2113106-01	1K MOS RAM 250NS	2	E11,E17
85	85		2113107-01	P 8251A PUSART COMM. INTERFA	1	E43
86	86		2113108-01	8080A-1 MICROPROCESSOR UNIT	1	E35
87	87		2113937-00	UART 200K BAUD = TO 19-10459-01	1	E55
88	88		2114212-00	P 2114-2 RAM,1024X4,STATIC	6	E46,E47,E50,E51,E53,E54
89	89		2114524-00	ROM 100X14BIT,ERASABLE,	1	E24
90	90		23018E2-00	E2-03	1	E4
91	91		9006010-01	SCREW,PAN ,PHIL, 4-40X 5/16	3	
92	92		9006557-00	NUT,KEP , 4-40X 1/4 AF	3	
93	93		9009185-00	JUMPER, WIRE, INSULATED, BLACK B	2	W1,W2
94	94		9105740-55	WIRE(WRAP)30AWG UL1423	A/R	
95	95		23031E2-00	E2-02	1	E56
96	96		23032E2-00	E2-02	1	E52
97	97		23033E2-00	E2-02	1	E45
98	98		23034E2-00	E2-02	1	E40
99	99		1211081-01	CONN TELE 3PIN PLUG	1	
100	100		9107560-01	WIRE,BUSS,22AWG	A/R	
101	101		9107776-66	WIRE(WRAP)22AWG,IPVC UL1429 BL	A/R	

D	I	G	I	T	A	L	TITLE VT100 BASIC VIDEO	SECTION A OF A

SIZE	CODE	DOCUMENT NUMBER	REV
K	PL	5413009-0-DBP	H

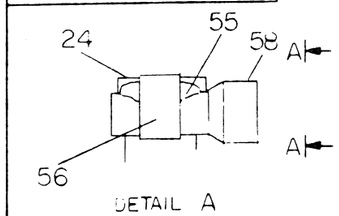

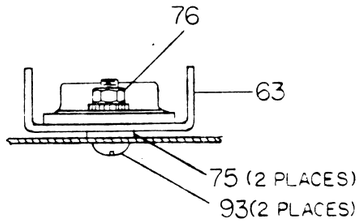

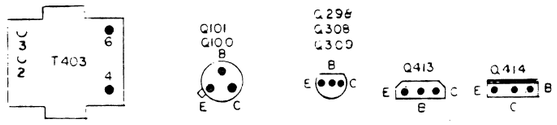

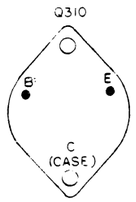

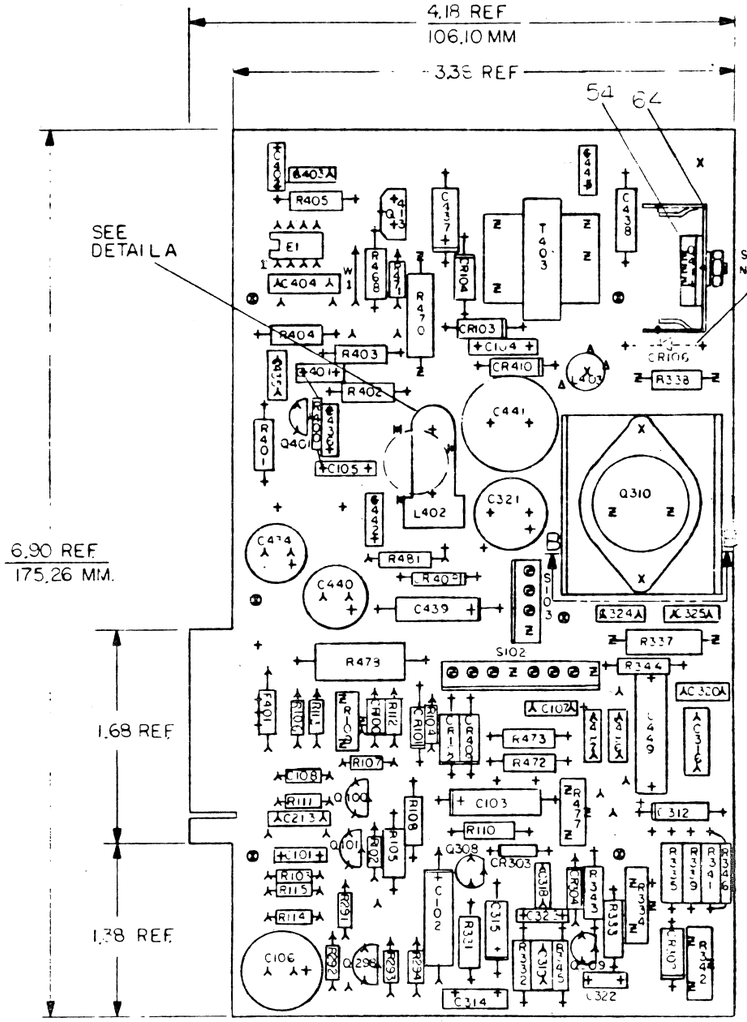

DETAIL A
SCALE: NONE

VIEW A-A

VIEW B-B

TRANSISTORS BOTTOM VIEW

COMPONENT SIDE VIEW

NOTES: 1 CR106 DO NOT USE
2 MAXIMUM LEAD LENGTH PROTRUSION .150 INCH ON SIDE 2

STEP &	↑ Y AXIS _____ STEP ___ TIMES
REPEAT	→ X AXIS _____ STEP ___ TIMES

REV	CHANGE NO	CHK
P	5414131-ML0007 REDRAWN R.PUCCI	
R	5414131-ML0009 K TENNEY	
S	5414131-ML0010 C TANNER	
T	5414131-ML011 W. BLOMSTER	

ETCH REV. D-P1

SIGNATURES	DATE
DRN.	12-24-90
CHK'D	12-24-90
MECH. ENG.	
PROJ. ENG.	
PROD.	
SCALE 2/1	
SHT. 1 OF 1	
NEXT HIGHER ASSY. B-DD-5414131-0	

digital

TITLE
VT100 MONITOR

SIZE	CODE	NUMBER	REV
D	UA	5414131-0-0	T

WO#267839

AUTOMATED BY PRTLST.3P(44)

P A R T S L I S T

LINE	ITEM	DOCUMENT NUMBER	PART NUMBER	DESCRIPTION	QTY PER VARIATION 00	01	REFERENCE DESIGNATOR
1	1	E-MD-5014130-0-0	5014130-00	DRILLED AND ETCH BOARD FOR VT100	1	1	
2	2		1016544-00	.1 MFD 100V 10% MYLR	2	2	C107,C442
3	3		1016546-00	.22 MFD 660V 10% MET. MYLR	1	1	C449
4	4		1016569-00	.0022 MFD 100V 10% MYLR	2	2	C436,C402
5	5		1016639-00	.01 MFD 200V 10% MYLR	1	1	C320
6	6		1016547-00	.022 MFD 200V 10% MYLR	1	1	C438
7	7		1016548-00	1000 MFD 16V +50-10% AL EL	1	1	C321
8	8		1010274-02	1 MFD 50V +80-20% CER	1	1	C443
9	9		1016555-00	22 MFD 50V +50-10% AL EL	2	2	C102,C103
10	10		1016496-00	4.7MFD 35V 20% S.TANT	2	2	C318,C319
11	11		1016554-00	75 MFD 6V +75-10% AL EL	1	1	C439
12	12		1016553-00	4.7MFD 25V +75-10% AL EL	2	2	C312,C437
13	13		1016558-00	10 MFD 25V 20% AL EL	1	1	C441
14	14		1016557-00	470 MFD 16V +50-10% AL EL	3	3	C106,C434,C440
15	15		1016556-00	.05 MFD 100V +80-20%Z5U DISC	3	3	C213,C314,C404
16	16		1016570-00	.001 MFD 500V +80-20%Z5U DISC	2	2	C435,C403
17	17		1016571-00	.02 MFD 500V +80-20%Z5U DISC	4	4	C104,C105,C486,C487
18	18		1016572-00	300.0 MMF 500V 10% X5P DISC	1	1	C101
19	19		1000004-00	.02 MFD 100V 20% Z5U DISC	4	4	C322,C323,C324,C325
20	20		1116474-00	1N 4007 PIV=1000 I=1A DO41	4	4	CR101,CR102,CR103,CR104
21	21		1116477-00	1N 4156 PIV= 20 DO35	1	1	CR304
22	22		1114892-00	1N 4747A VZ= 20.0 5% 1W	1	1	CR410
23	23		1116476-00	PIV=400	1	1	CR408
24	24		1216530-04	MAGNET,PINCUSHION 10 GAUSS	1	1	
25	25	SEE NOTE	1003053-00	.047 MFD 250V 20% MET. MYLR	1	1	C316
26	26		1316522-00	2.50 K .25 W20.0 % POT	1	1	R342
27	27		1316522-02	5.0 M .25 W20.0 % POT	1	1	R477
28	28		1316522-01	100.0 K .25 W20.0 % POT	1	1	R109
29	29		1317528-00	39.0 2.0 W10.0 % CC	1	1	R470
30	30		1300479-00	10.0 K .25 W 5.0 % CF	1	1	R291

REVISION HISTORY			BASIC PART NO: 5414131		
ENG	ECO NUMBER	REV	SECTION A OF A	DRN: KENT GLEEZEN	DATE: 24-MAR-81
---	INITIAL	P	SECTION.VARIATION INDEX	CHK'D: KENT GLEEZEN	DATE: 24-MAR-81
DP	5414131-ML007	R	[A] 00,01		
DP	5414131-ML008	S	[B]		
CT	5414131-ML010	T	[C]	DES.ENG: DICK PUCCI	DATE: 24-MAR-81
WB	5414131-ML011	U	[D]		
			[E]		
			[F]	RESP.ENG.: DICK PUCCI	DATE: 24-MAR-81
			[H]		
			[J]		
			[K]	MFG.ENG.: AL JOHNS	DATE: 24-MAR-81
			[L]		
			[M]	ASSEMBLY NUMBER:	TOP DOCUMENT NUMBER:
			[N]	D-UA-5414131-0-0	B-DD-5414131-0-0

D I G I T A L

TITLE PARTS LIST

VT100 MONITOR

DOCUMENT NUMBER			
SIZE	CODE	NUMBER	REV
K	PL	5414131-0-DBP	U
		FILE NAME: Z2387U.PLS	EDIT # 15

LINE	ITEM	DOCUMENT NUMBER	PART NUMBER	DESCRIPTION	QTY PER VARIATION 00	01	REFERENCE DESIGNATOR
78	78		1300432-00	3.0 K .25 W 5.0 % CF	1	1	R400
79	79		1300439-00	3.30 K .25 W 5.0 % CF	1	1	R104
80	80		1301775-00	820.0 .25 W 5.0 % CF	1	1	R293
81	81		1300295-00	330.0 .25 W 5.0 % CF	1	1	R294
82	82		9107776-99	WIRE(WRAP) 22AWG IPVC UL14	A/R	-	
83	83		9009185-00	JUMPER, WIRE, INSULATED, BLACK B	1	1	W1
84	84		1302602-00	56.0 .25 W 5.0 % CF	2	-	R102,R103
			CONT		-	1	R103
85	85		1300250-00	150.0 .25 W 5.0 % CF	-	1	R102
86	86		1300316-00	470.0 .25 W 5.0 % CF	-	1	R111
87	87		1302395-00	56.0 K .25 W 5.0 % CF	-	1	R112
88	88		1302092-00	220.0 K .25 W 5.0 % CF	1	1	R113
89	89		1312930-00	5.10 K .25 W 5.0 % CF	1	-	R292
			CONT		-	3	R292,R114,R115
90	90		1001610-00	.01 MFD 50V +80-20% Z5U CER	-	1	C108
91	91		1116475-00	1N 4148 PIV= 75 D035	2	-	CR302,CR303
			CONT		-	3	CR302,CR303,CR100
92	92		1111854-01	MR 817 PIV=800 I= 1A D041 S	1	1	CR409
93	93		9006023-01	SCREW,MACH PAN PHIL 6-	2	2	
94	94		1316522-06	25.0 K .25 W20.0 % POT	1	1	R334
95	95		1301327-00	68.0 K .25 W 5.0 % CF	1	1	R335
96	96		1319255-06	12.0 1.0 W 5.0 % M.OXIDE	1	1	R337
97	97		1301732-00	620.0 .50 W 5.0 % CF	1	1	R341
98	98		1309785-00	300.0 2.0 % NTC THERM	1	1	R346
99	99		1300478-00	10.0 K .50 W 5.0 % CF	1	1	R333

100 NOTE: P/N 1000051-00 CAN BE USED AS AN ALTERNATE FOR P/N 1003053-00.

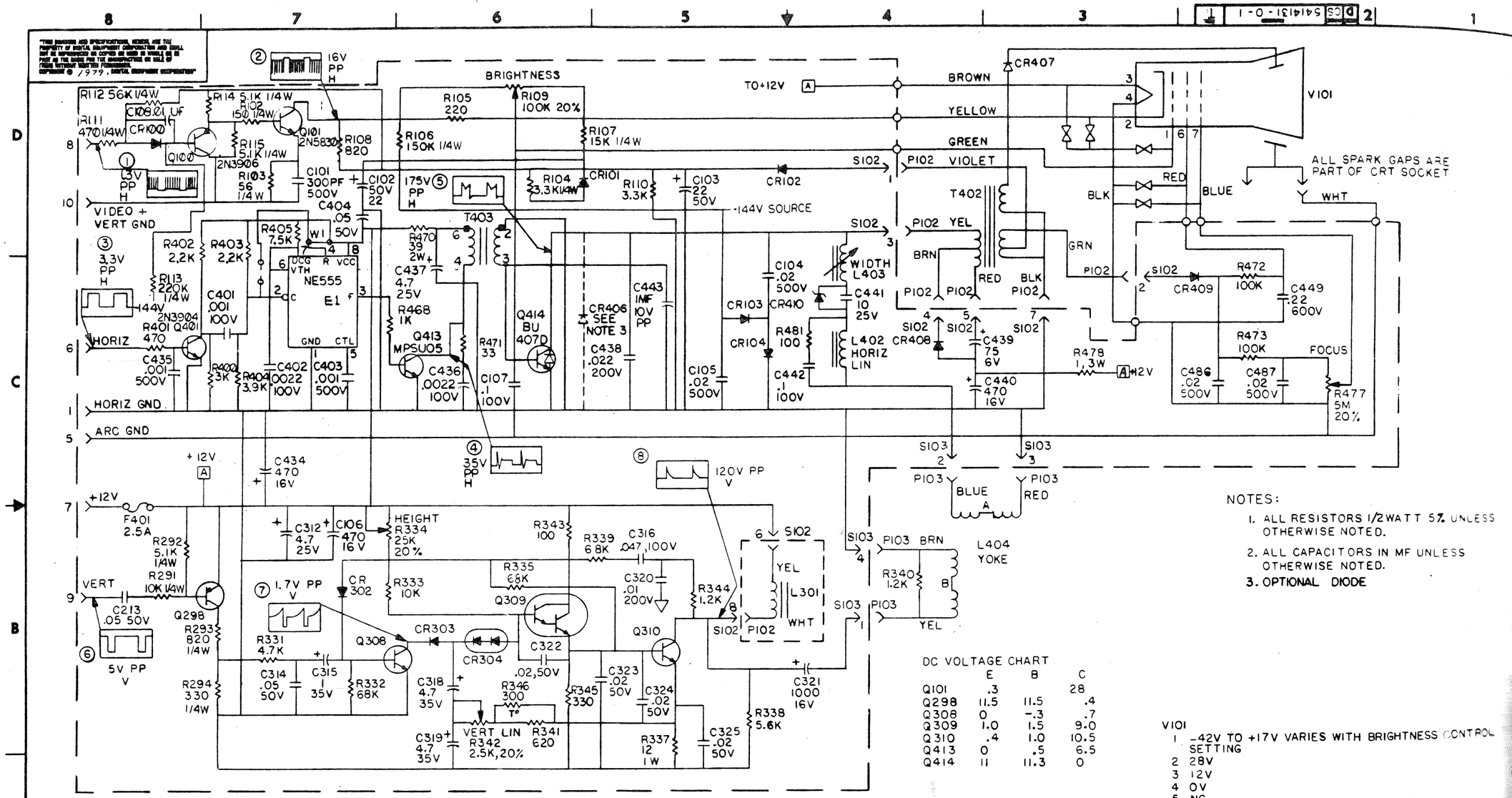

NOTES:

1. ALL RESISTORS 1/2WATT 5% UNLESS OTHERWISE NOTED.
2. ALL CAPACITORS IN MF UNLESS OTHERWISE NOTED.
3. OPTIONAL DIODE

DC VOLTAGE CHART

	E	B	C
Q101	.3		28
Q298	11.5	11.5	.4
Q308	0	-.3	.7
Q309	1.0	1.5	9.0
Q310	.4	1.0	10.5
Q413	0	.5	6.5
Q414	11	11.3	0

V101
1 -42V TO +17V VARIES WITH BRIGHTNESS CONTROL SETTING
2 28V
3 12V
4 0V
5 NC
6 +365V
7 0V TO +360V VARIES WITH FOCUS CONTR
2ND ANODE 12KV

DRN. P. Nelson	1 MAR 77	FIRST USED ON	VT100
CHK'D		TITLE	VT100 MON
ENG. R. Dickson			
PROJ. ENG.			
PROD.			
NEXT HIGHER ASSY.	D-UA-5414131-0-0	SIZE D	CODE CS
SCALE		NUMBER	5414131-0-1
SHEET 1 OF 1		DIST.	

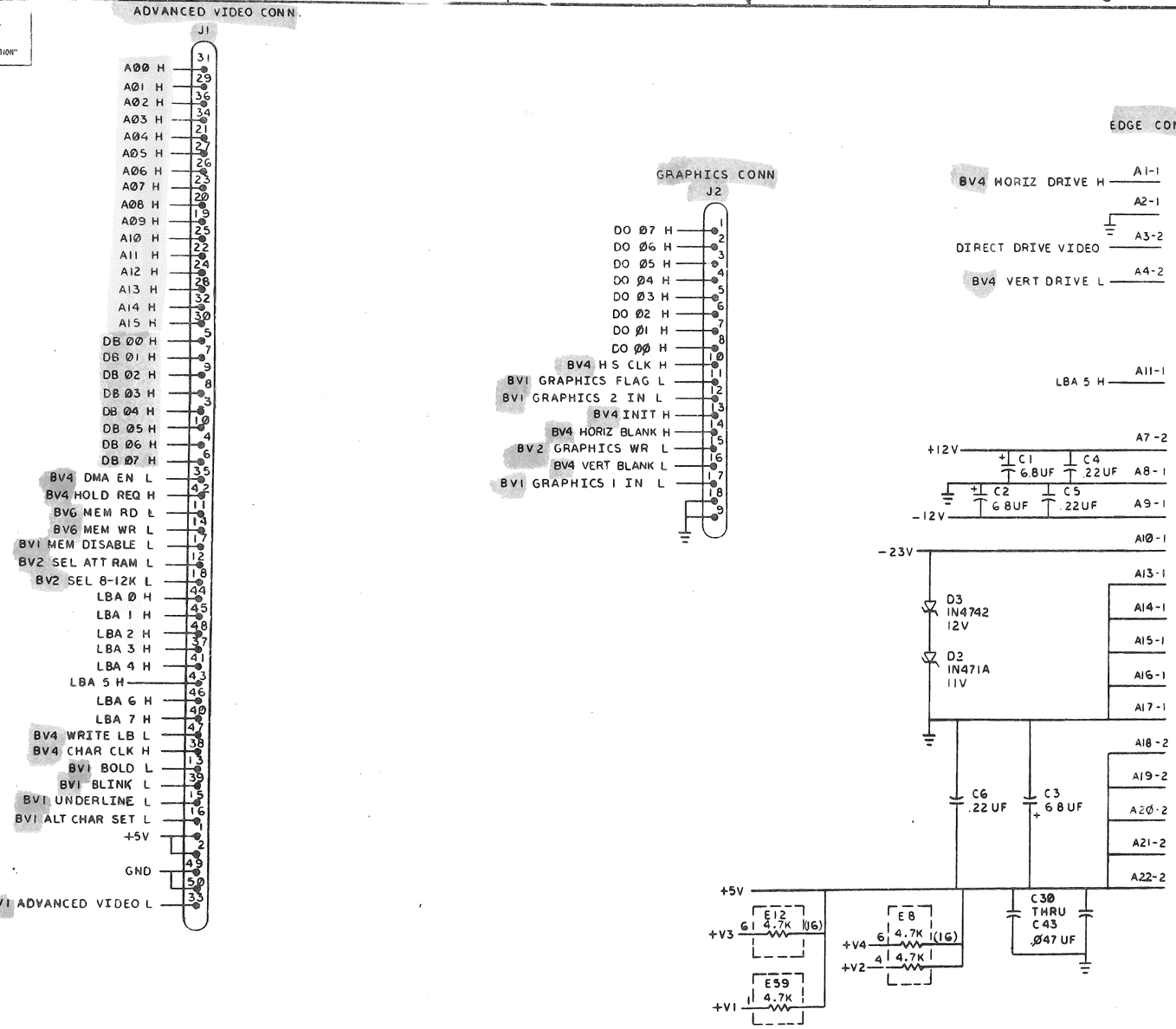

REVISIONS			
CHK	CODE NO.	REV.	
	5413009-ML001	C	
R. PUCCI 10-6-78			
R. PUCCI 11-15-78			
5413009 ML002		D	
8 DEC 78			
R. PUCCI			
R. PUCCI 1-5-79			
MLOO3		E	
POWERS			
R. PUCCI			
5413009 ML004		F	
5413009-ML005		H	
L. KING 6 Jan 79			
L. KING 1-26-79			

DRN.	2-1-78	FIRST USED ON VT100
CHK'D	2/1/78	digital
ENG.	2/1/78	TITLE VT100 BASIC VIDEO (BVI)
PROJ. ENG.	2/1/78	
PROD	2/13/78	
NEXT HIGHER ASSY.		
E-UA-5413009-0-0		SIZE D CODE CS NUMBER 5413009-0-1 REV. H
SCALE		
SHEET 1 OF 6		DIST.

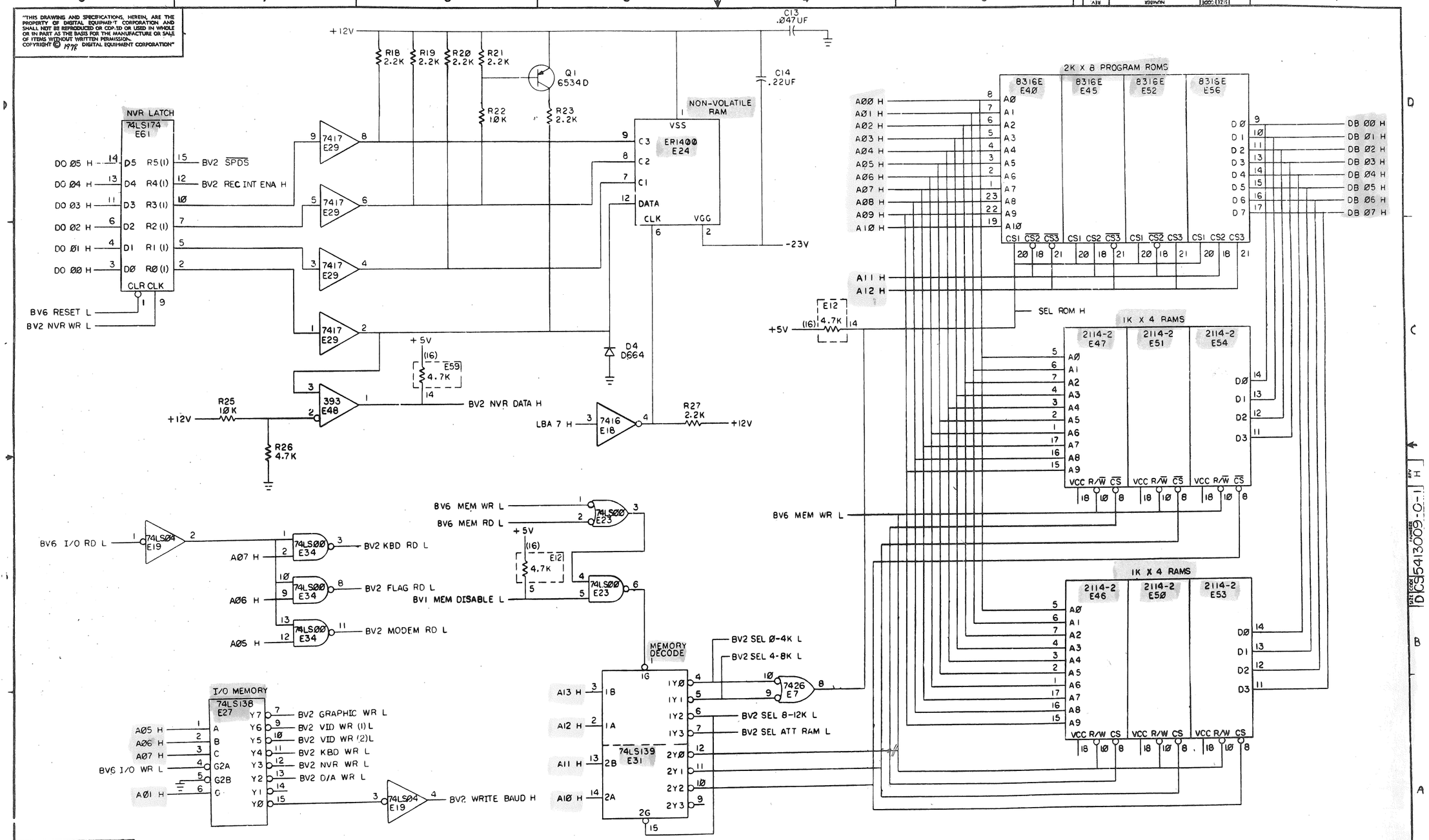

REVISIONS		
CHK	CHANGE NO.	REV.

TITLE	SIZE	CODE	NUMBER	REV.
VT1ØØ BASIC VIDEO (BV2)	D	CS	5413009-0-1	H
SCALE	SHEET 2 OF 6	DIST.		

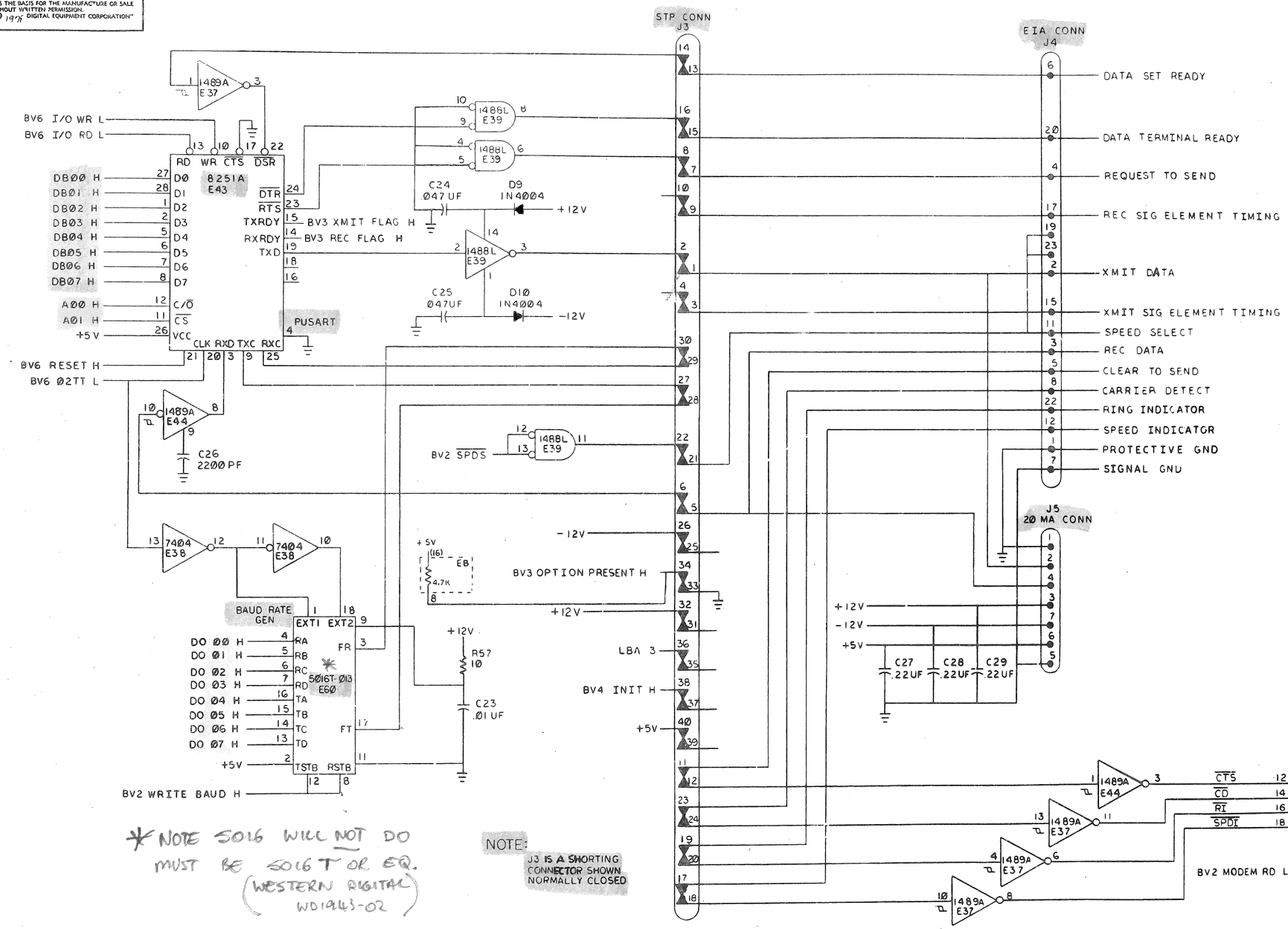

* NOTE 5016 WILL NOT DO
MUST BE 5016 T OR EQ.
(WESTERN DIGITAL
WD1943-02)

NOTE:
J3 IS A SHORTING CONNECTOR SHOWN NORMALLY CLOSED

REVISIONS		
CHK	CHANGE NO.	REV.

TITLE	SIZE	CODE	NUMBER	REV.
VTIØØ BASIC VIDEO (BV3)	D	CS	5413009-0-1	H
SCALE — / —	SHEET 3 OF 6		DIST.	

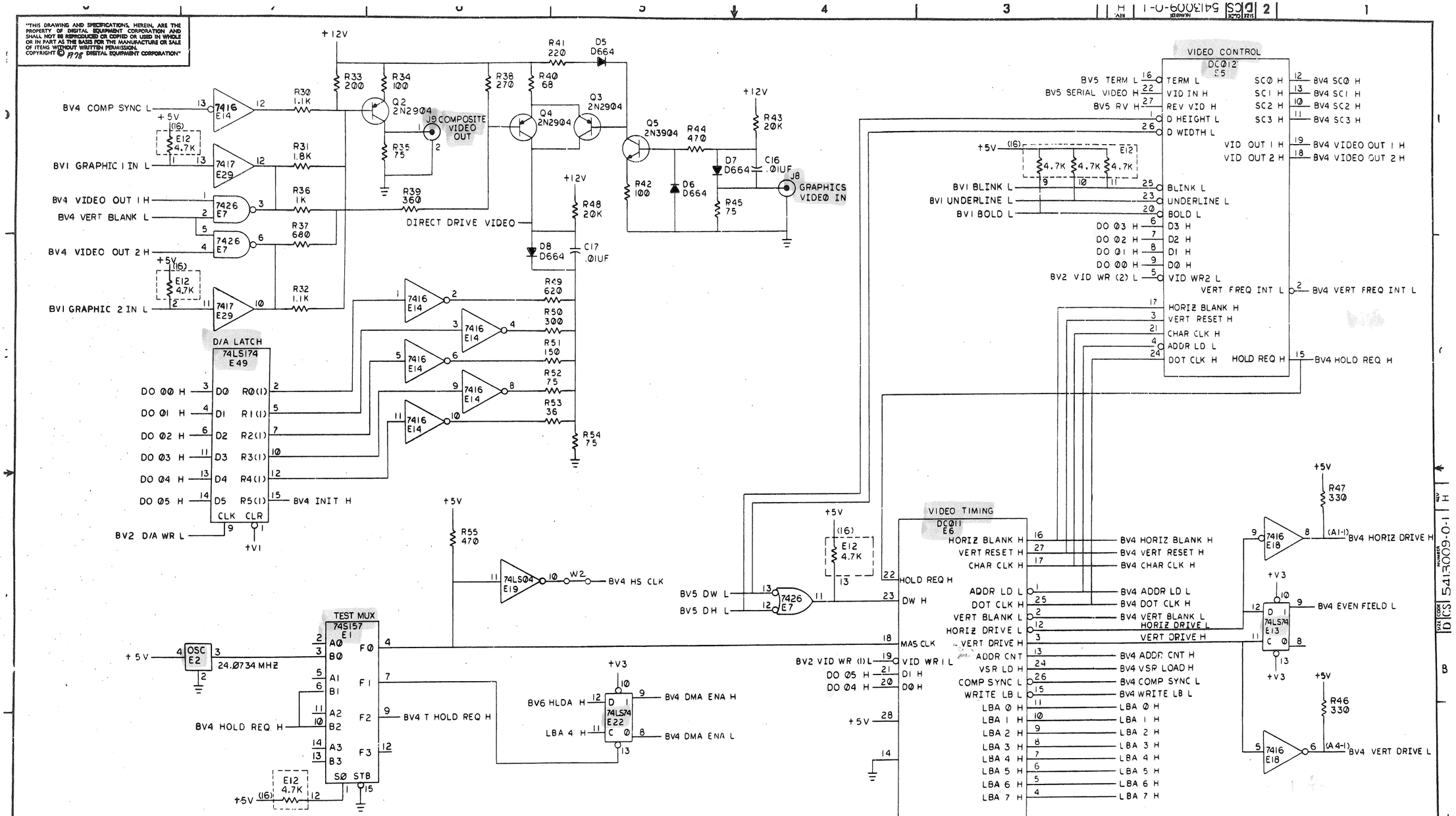

REVISIONS		
CHK	CHANGE NO.	REV.

TITLE	SIZE	CODE	NUMBER	REV.
VT100 BASIC VIDEO (BV4)	D	CS	5413009-0-1	H
SCALE — / —	SHEET 4 OF 6	DIST.		

DEC FORM NO. DAD 139

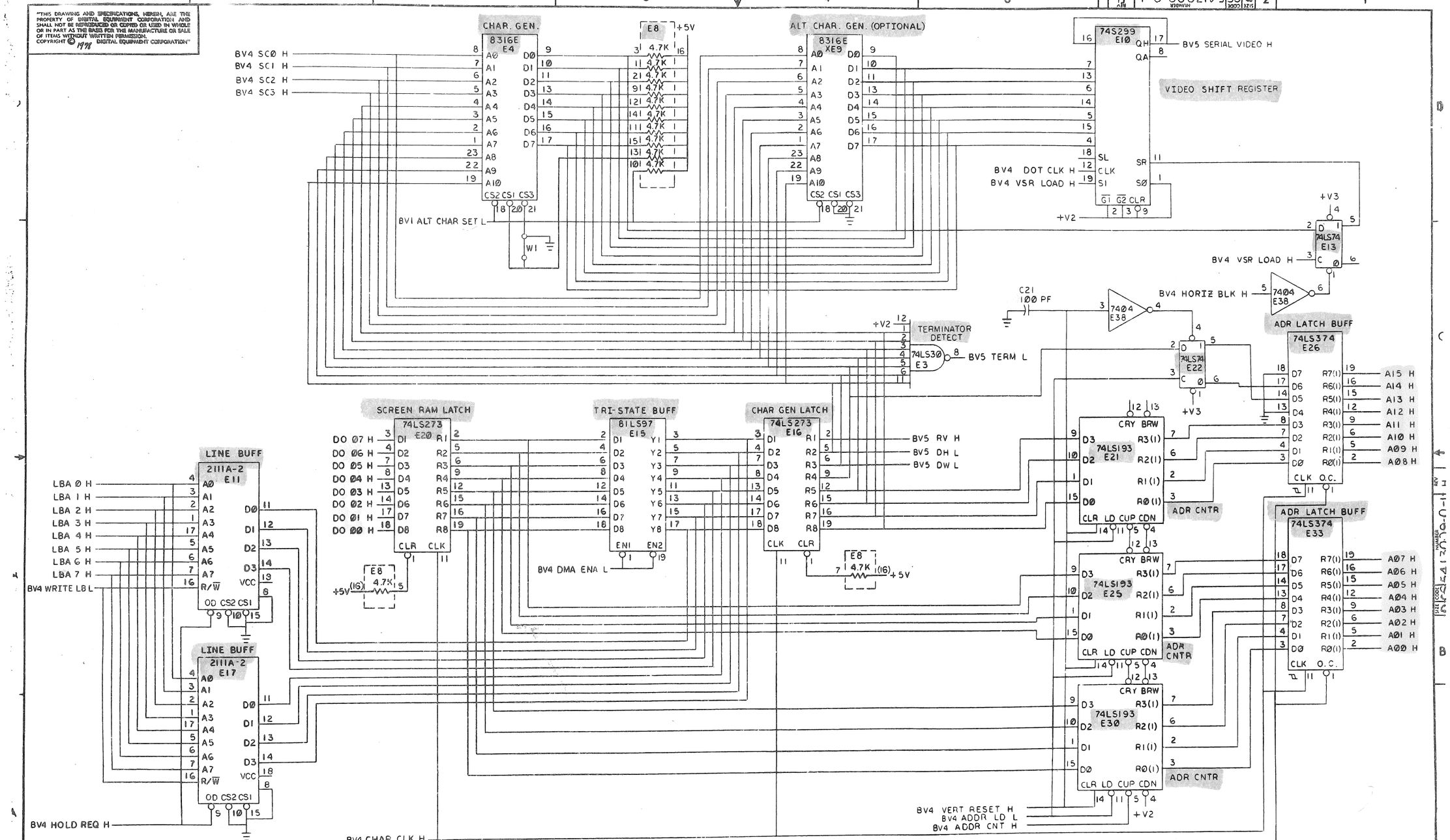

REVISIONS		
CHK	CHANGE NO.	REV.

TITLE	SIZE	CODE	NUMBER	REV.
VT100 BASIC VIDEO (BV5)	D	CS	5413009-0-1	H
SCALE — / —	SHEET 5 OF 6	DIST.		

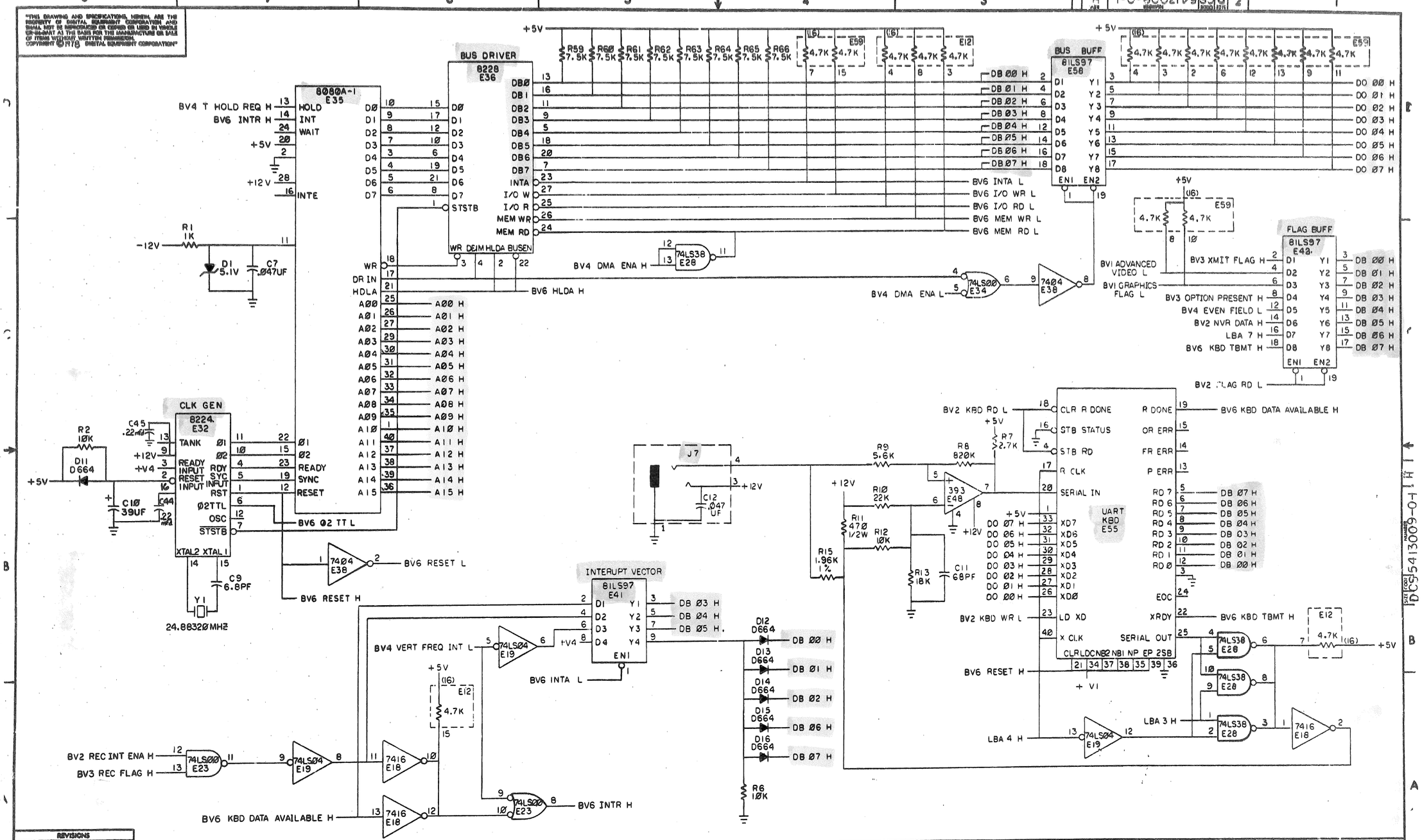

REVISIONS		
CHK	CHANGE NO.	REV.

TITLE VT100 BASIC VIDEO (BV6)

SIZE D CODE CS NUMBER 5413009-0-1 REV. H

SCALE — SHEET 6 OF 6 DIST.

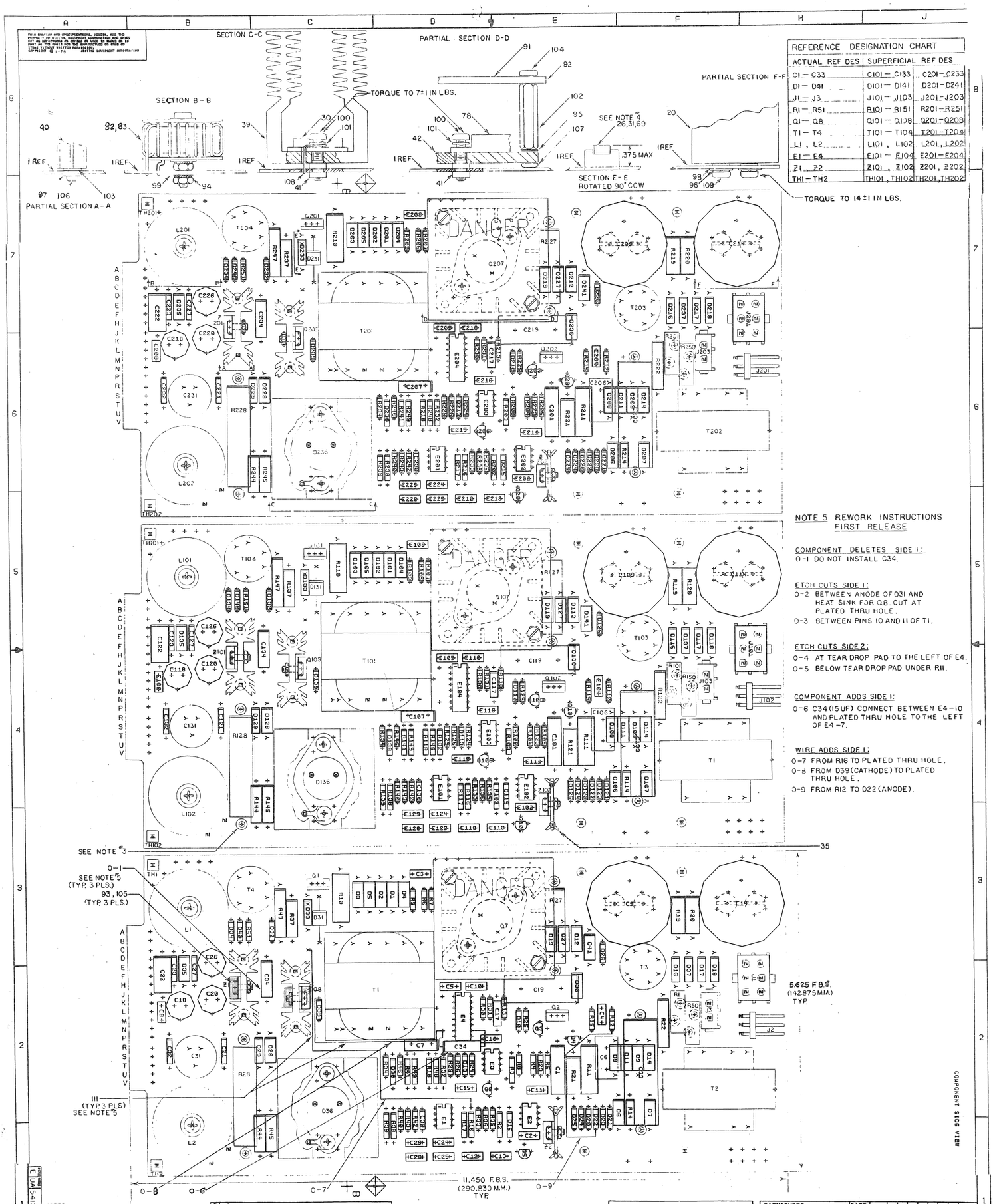

REFERENCE DESIGNATION CHART		
ACTUAL REF DES	SUPERFICIAL REF DES	
C1 — C33	C101 — C133	C201 — C233
D1 — D41	D101 — D141	D201 — D241
J1 — J3	J101 — J103	J201 — J203
R1 — R51	R101 — R151	R201 — R251
Q1 — Q8	Q101 — Q108	Q201 — Q208
T1 — T4	T101 — T104	T201 — T204
L1, L2	L101, L102	L201, L202
E1 — E4	E101 — E104	E201 — E204
Z1, Z2	Z101, Z102	Z201, Z202
TH1 — TH2	TH101, TH102	TH201, TH202

NOTE 5 REWORK INSTRUCTIONS
FIRST RELEASE

COMPONENT DELETES SIDE 1:
0-1 DO NOT INSTALL C34

ETCH CUTS SIDE 1:
0-2 BETWEEN ANODE OF D31 AND HEAT SINK FOR Q8. CUT AT PLATED THRU HOLE.
0-3 BETWEEN PINS 10 AND 11 OF T1.

ETCH CUTS SIDE 2:
0-4 AT TEAR DROP PAD TO THE LEFT OF E4.
0-5 BELOW TEAR DROP PAD UNDER R11.

COMPONENT ADDS SIDE 1:
0-6 C34 (15 UF) CONNECT BETWEEN E4-10 AND PLATED THRU HOLE TO THE LEFT OF E4-7.

WIRE ADDS SIDE 1:
0-7 FROM R16 TO PLATED THRU HOLE.
0-8 FROM D39 (CATHODE) TO PLATED THRU HOLE.
0-9 FROM R12 TO D22 (ANODE).

NOTES:
1. REFER TO PARTS LIST FOR IDENTIFICATION OF ALL NUMBERED ITEMS.
2. THIS BOARD REQUIRES U/L APPROVAL.
3. ITEMS 21, 68, 72, AND 74 ARE MOUNTED UP OFF THE BOARD USING CERAMIC STAND OFFS.
4. ITEMS 26, 31, AND 69 MUST STAND OFF THE BOARD. NO STAND OFFS REQUIRED.

CHK CHANGE NO.	REV
2-2-72	C
2-25-72	D

ETCH REV. D
P.C. DESIGN DATA BASE REV. D

SIGNATURES	DATE
DRN.	2-20-72
CHK.	
ENG.	
PROJ. ENG.	
PROD.	

digital

TITLE H7831 POWER SUPPLY

SCALE	SIZE	CODE	NUMBER	REV
2/1	E	UA	5412996-0-0	C

SHT. 1 OF 3

NEXT HIGHER ASSY. B-CD-5412995-0-0

5412996-0-0 REV C

TITLE H7831 POWER SUPPLY

SCALE 2/1 SHEET 2 3

E UA 5412996-0-0 C

PC C

DATE CODE E 1 JAN. 1972 PC NUMBER 5412996-0-0

B

TITLE H7831 POWER SUPPLY	SIZE E	CODE UA	TOL. SHEET 5412996-0-0
SCALE 2/1	SHEET 3 OF 3		REV C

AUTOMATED BY PRTLST.1D(11)

P A R T S L I S T

LINE	ITEM	DOCUMENT NUMBER	PART NUMBER	DESCRIPTION	QTY PER VARIATION 00	REFERENCE DESIGNATOR
1	1	E-MD-5012995-0-0	5012995-00	H7831 POWER SUPPLY	1	
2	2		1000009-00	33.0 MMF 100V 5%200PPM DM15S	1	C2
3	3		1000016-00	100.0 MMF 100V 5%200PPM DM15S	3	C5,C15,C16
4	4		1000039-00	.056 MFD 200V 10% 663UW MYLR	1	C1
5	5		1000042-00	1000.0 MMF 100V 5%200PPM DM15S	5	C13,C24,C25,C28,C29
6	6		1000055-00	2200. MMF 250V 20% Y5S DISC	2	C3,C4
7	7		1001610-00	.01 MFD 50V -20+80 Z5U AXIAL	1	C30
8	8		1004812-00	*** THIS ITEM IS NOT USED ***	-	
9	9		1005507-00	1 MFD 100V E% 30D AL EL	1	C22
10	10		1011847-01	.01 MFD 400V 10% POLYPROP	1	C6
11	11		1015202-01	.0018 MFD 1600V 10% POLYPROP	1	C19
12	12		1001776-00	1 MFD 35V 10% S.TANT	1	C17
13	13		1010274-00	.22 MFD 50V -20+80 Z5U CER	4	C8,C10,C11,C12
14	14		1012607-00	560 MFD 20V H% 672D AL EL	1	C26
15	15		1012607-04	270 MFD 40V H% 672D AL EL	1	C20
16	16		1012607-05	20MFD 200V H% 672D AL EL	1	C18
17	17		1013466-11	.22 MFD 50V +80/-20% CER.	4	C21,C23,C27,C32
18	18		1014170-00	2700.0 MMF 100V 1% 70PPM	1	C7
19	19		1014277-00	3800 MFD 6.3V G% AL EL	1	C31
20	20		1014861-00	590 MFD 200V E% AL EL	2	C9,C14
21	21		1014883-00	470 MFD 50V G% AL EL	1	C33
22	22		1100114-00	D 664 GS\75PCB PIV= 25V SP	4	D10,D13,D39,D40
23	23		1105796-00	1N 4004 PIV=400 I= 1A D041 SP	9	D20-D26,D32,D34
24	24		1105873-00	.4M5.1Z1 VZ= 5.1 1% .400W	1	D38
25	25		1109991-01	4M6.8AZ1 VZ= 6.8 1% .40W	1	D15
26	26		1112594-01	A115B PIV=200 I= 3A	1	D31
27	27		1112595-00	A114F PIV= 50 I= 1A	6	D1,D2,D3,D5,D12,D41
28	28		1112595-01	A114B PIV=200 I= 1A	7	D4,D6,D7,D8,D9,D11,D14
29	29		1112595-02	A114M PIV=600 I= 1A	2	D27,D28

REVISION HISTORY			BASIC PART NO: 5412996
ENG	ECO NUMBER	REV	SECTION A OF A
---	INIT	B	SECTION.VARIATION INDEX
KH	PN001	C	[A] 00
			[B]
			[C]
			[D]
			[E]
			[F]
			[H]
			[J]
			[K]
			[L]
			[M]
			[N]

DRN: VIN PARECHANIAN	DATE: 2-20-78	D I G I T A L
CHK'D: TONY	DATE: 16-MAR-78	TITLE PARTS LIST H7831 POWER SUPPLY
DES.ENG: BOB PEDERSEN	DATE: 7-JUN-78	
RESP.ENG.: BOB PENDERSON	DATE: 7-JUN-78	DOCUMENT NUMBER
MFG.ENG.: T. CORCIARI	DATE: 7-JUN-78	SIZE K, CODE PL, NUMBER 5412996-0-DBP, REV C
ASSEMBLY NUMBER: E-UA-5412996-0-0		FILE NAME: 12996C.PLS, EDIT # 13

LINE	ITEM	DOCUMENT NUMBER	PART NUMBER	DESCRIPTION	QTY PER VARIATION 00	REFERENCE DESIGNATOR
30	30		1115529-00	UES2601 PIV=50V I=30A	1	D36
31	31		1114602-00	UES1302 PIV=100V I= 4A	2	D29,D33
32	32		1115112-00	A114NX93 PIV=800 I=2A	2	D19,D30
33	33		1115182-00	1N 5626 PIV=600 I= 3A	4	D16,D17,D18,D37
34	34		1115224-00	VOLT.TRANS.SUPPRESS 12.1	1	D35
35	35		1215228-00	HEAT SINK,TO-220,VERTICAL MNT	1	
36	36		1212204-10	HEADER.156 3POS RT ANGLE	1	J2
37	37		1212297-00	MATE-N-LOK 2PIN UNIV HEADER	1	J3
38	38		1212297-05	MATE-N-LOK 6PIN UNIV.	1	J1
39	39		1211987-03	HEAT SINK	1	
40	40		1213921-03	HEAT SINK,TAB MNT SEMI 2.5" HIGH	2	
41	41		1214789-00	INSERT,THREADED 6-32 ,BRASS,ELEC	4	
42	42		1210012-04	HT SINK W/HOLES	1	
43	43		1300219-00	68 1/4W 5% CC	2	R9,R12
44	44		1300249-00	150 1/2W 5% CC	1	R14
45	45		1300271-00	220 1/4W 5% CC	1	R6
46	46		1300288-00	270 2W 10% CC	2	R10,R11
47	47		1300316-00	470 1/4W 5% CC	2	R13,R46
48	48		1300365-00	1 K 1/4W 5% CC	3	R26,R35,R43
49	49		1300417-00	2.2 K 1/4W 5% CC	1	R8
50	50		1300426-00	2.7 K 1/4W 5% CC	1	R23
51	51		1300488-00	12 K 1/4W 5% CC	1	R4
52	52		1300496-00	15 K 1/4W 5% CC	1	R24
53	53		1300536-00	100 K 1W 10% CC	2	R19,R20
54	54		1301317-00	10 1/4W 5% CC	3	R7,R15,R25
55	55		1302091-00	330 K 1/4W 5% CC	2	R30,R51
56	56		1302177-00	47 K 1/4W 5% CC	1	R31
57	57		1302388-00	2 K 1/4W 5% CC	1	R29
58	58		1302398-00	470 K 1/4W 5% CC	1	R33
59	59		1303187-00	820 K1/4W 5% CC	1	R5
60	60		1304833-00	1.96 K 1/4W 1% RN55D-F 100PPM	1	R3
61	61		1304854-00	5.11 K 1/4W 1% RN55D-F 100PPM	4	R32,R41,R48,R49
62	62		1304862-00	1.62 K 1/4W 1% RN55D-F 100PPM	1	R16
63	63		1304868-00	2.74 K 1/4W 1% RN55D-F 100PPM	1	R2
64	64		1305108-00	1.47 K 1/4W 1% RN55D-F 100PPM	1	R39
65	65		1305130-00	133 K 1/4W 1% RN55D-F 100PPM	1	R38
66	66		1309422-00	5.1 1/4W 5% CC	1	R34
67	67		1309595-00	1 M 1/4W 5% CC	3	R36,R40,R42
68	68		1310188-00	300 10W 5% WW	1	R28
69	69		1311338-00	82 3W 5% WW	1	R21
70	70		1312985-00	332 K 1/4W 1% RN55D-3323F	1	R17
71	71		1313014-00	.01 3-3/4W 3% WW	3	R37,R44,R45
72	72		1313191-00	1 K 9W 5% WW	1	R27
73	73		1314187-00	6.19 K 1/4W 1% RN55D-F 100PPM	1	R18
74	74		1314270-00	5 15% THERMISTOR	2	R1,R50
75	75		1314350-00	1 2W 10% WW	2	R22,R47
76	76		1510705-00	XA 05 NPN 500MW SI 60 50 P	2	Q3,Q6

D	I	G	I	T	A	L	TITLE	SECTION	SIZE	CODE	DOCUMENT NUMBER	REV
							H7831 POWER SUPPLY	A OF A	K	PL	5412996-0-DBP	C

P A R T S L I S T

LINE	ITEM	DOCUMENT NUMBER	PART NUMBER	DESCRIPTION	QTY PER VARIATION 00	REFERENCE DESIGNATOR
77	77		1510706-00	XA 55 PNP 500MW SI 60 50 P	2	Q4,Q5
78	78		1512782-00	NPN 100W S1325 15	1	Q7
79	79		1514271-00	D 44Q1 NPN 4WC SI125 20	3	Q1,Q2,Q8
80	80		1614272-00	PULSE XFMR,4 WOUND	1	T3
81	81		1614273-00	PULSE XFMR,TRI-WOUND	1	T4
82	82		1615251-00	42.0 UH VARIABLE L 11A	1	L2
83	83		1615252-00	210.0 UH VARIABLE 2.75A	1	L1
84	84		1615253-00	XFMR P=AB S=25V	1	T2
85	85		1615668-00	XFMR P=245-360V S=5V@2.5A	1	T1
86	86		1910282-00	301AN OP AMP	1	E2
87	87		1911944-00	555CN TIMER,FUNCT,BLOCK	1	E3
88	88		1912048-02	DEC 7812-02 VOLT REG,FIXED +12	2	Z1,Z2
89	89		1914156-00	LM 393 VOLT,COMPARATOR DUAL	1	E1
90	90		1914250-00	3524 MODULATOR-REGULATING	1 (25-28)	E4
91	91		3610267-00	DECAL, ADHESIVE BACK -DANGER HIG	1	
92	92		7416423-00	PLASTIC SAFETY COVER	1	
93	93		9006557-00	NUT,KEP , 4-40X 1/4 AF	3	
94	94		9006563-00	NUT,KEP , 8-32 X11/32AF	2	
95	95		9006633-00	WASHER,LOCK,INT,.280OD X .146ID	2	
96	96		9007906-00	WASHER, LOCK S.S. #10	4	
97	97		9006655-00	WASHER, FLAT, .312 O.D. X .125 I	4	
98	98		9009950-01	WASHER, FLAT, .438 O.D. X .203 I	4	
99	99		9006666-00	WASHER, FLAT, .500 OD X .187 ID	2	
100	100		9007793-01	SCREW,PAN ,PHIL, 6-32X 9/16	4	
101	101		9007801-00	WASHER, LOCK, S.S. #6	4	
102	102		9007985-00	SPACER, HEX, ALUM. 6-32, .250 X	2	
103	103		9008079-00	WASHER, FLAT FIBER OD. 1/4	4	
104	104		9008212-00	SCREW, NYLON, SLTD PAN HD, 6-32	2	
105	105		9008301-01	SCREW,PAN ,PHIL, 4-40X 1/4	3	
106	106		9009236-00	SCREW,TAPPING,TYPE F,PAN ,PHIL,	4	
107	107		9009516-06	SCREW,NYLON,SLTD FILISTR HD 6-32	2	
108	108		9009676-00	TERM LUG 1POS SOLDER	1	
109	109		9000038-13	SCREW,PAN,PHIL, 10-32X 5/16 B	4	
110	110		9009798-00	SPACER, CERAMIC, .186 ODX.078 ID	10	
111	111		9107350-44	WIRE,STRND,22AWG,IPVC UL1429	A/R	

0 NOTE: SEE E-UA-5412996-0-0 FOR ADDITIONAL INSERTION INFORMATION

D I G I T A L	TITLE H7831 POWER SUPPLY	SECTION A OF A	SIZE K	CODE PL	DOCUMENT NUMBER 5412996-0-DRP	REV C

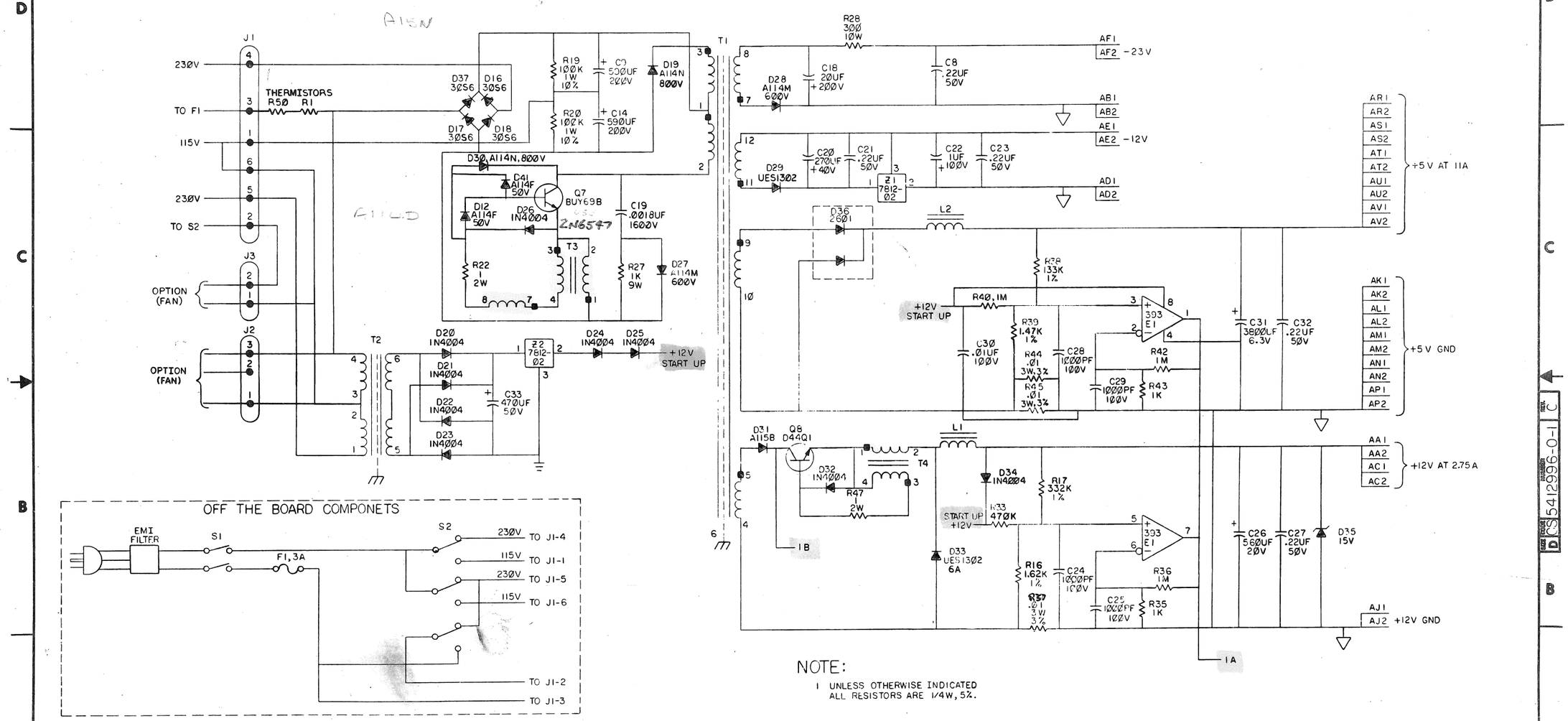

NOTE:

1 UNLESS OTHERWISE INDICATED ALL RESISTORS ARE 1/4W, 5%.

REVISIONS			
CHK	CHANGE NO.	REV.	
J.T.	5412996 - PN001	C	J. BITTO (D.C.)

DRN.		
CHK'D		
ENG		
PROJ. ENG.		
PROD.		
NEXT HIGHER ASSY.	B-DD-5412996-C	
SCALE		
SHEET 1 OF 2		

FIRST USED ON H7831

digital

TITLE H7831 POWER SUPPLY

SIZE	CODE	NUMBER	REV.
D	CS	5412996-0-1	C

DIST.

DEC FORM NO. GRD 102-0

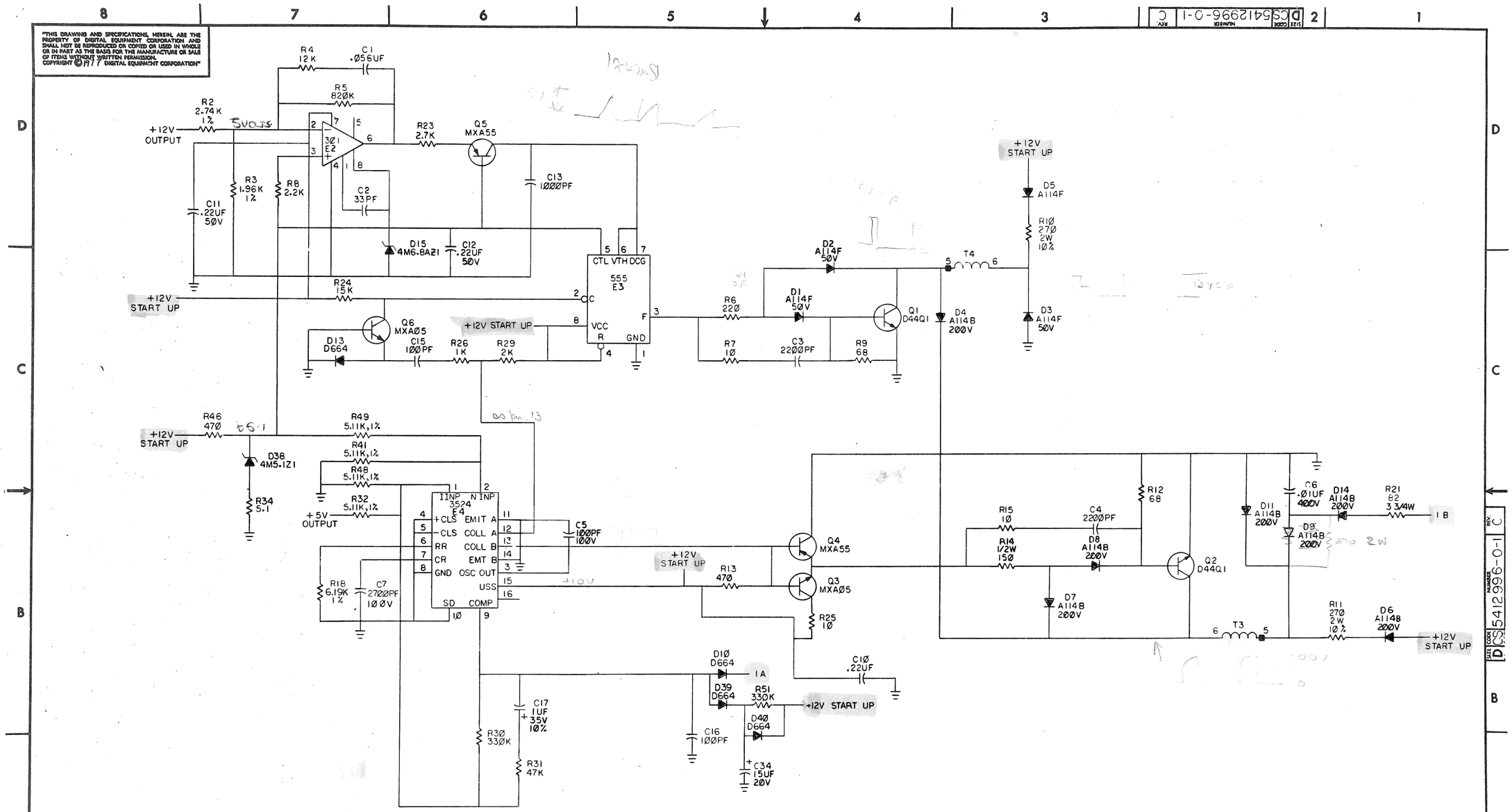

REVISIONS		
CHK	CHANGE NO.	REV.

TITLE	SIZE	CODE	NUMBER	REV.
H7831 POWER SUPPLY	D	CS	5412996-0-1	C
SCALE —	SHEET 2 OF 2	DIST.		

DEC FORM NO. DRD 139

NOTES:

1. CONNECT PLUG FROM ITEM 1 (7015053-0-0) TO J2 ON ITEM 2 (5412996).
2. INSTALL ITEM 3 AS SHOWN, TYP. 4 PLACES.
3. IDENTIFICATION: STAMP USING 1/8" CHARACTER HEIGHT AS INDICATED BELOW TO HIGHEST LEVEL OF SUBASSEMBLY SPECIFIED ON PURCHASE ORDER AND LOCATE APPROX. AS SHOWN ON DRAWING.
   A.) PART NUMBER
   B.) REVISION
   C.) VENDOR IDENTIFICATION.
4. LOCATE ITEM NO. 4 & 5 APPROX AS SHOWN.

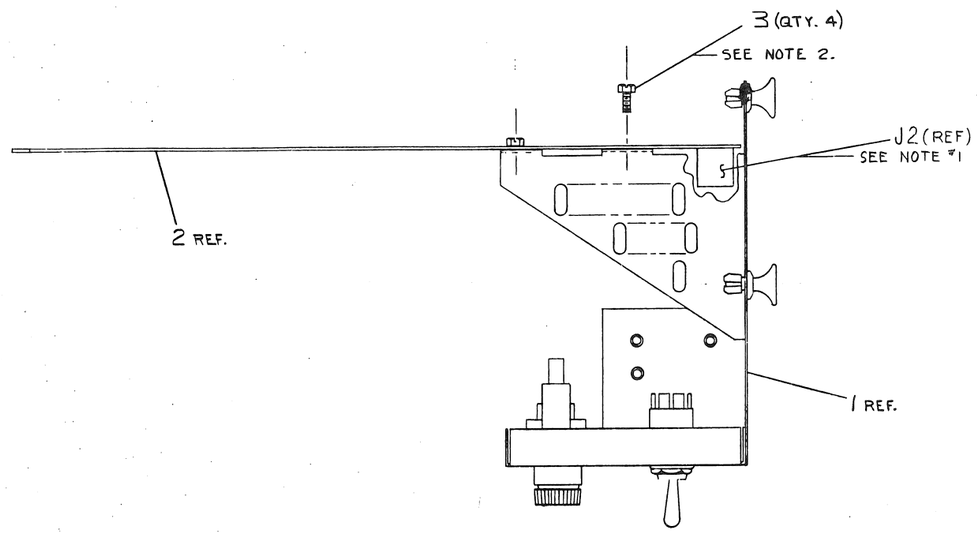

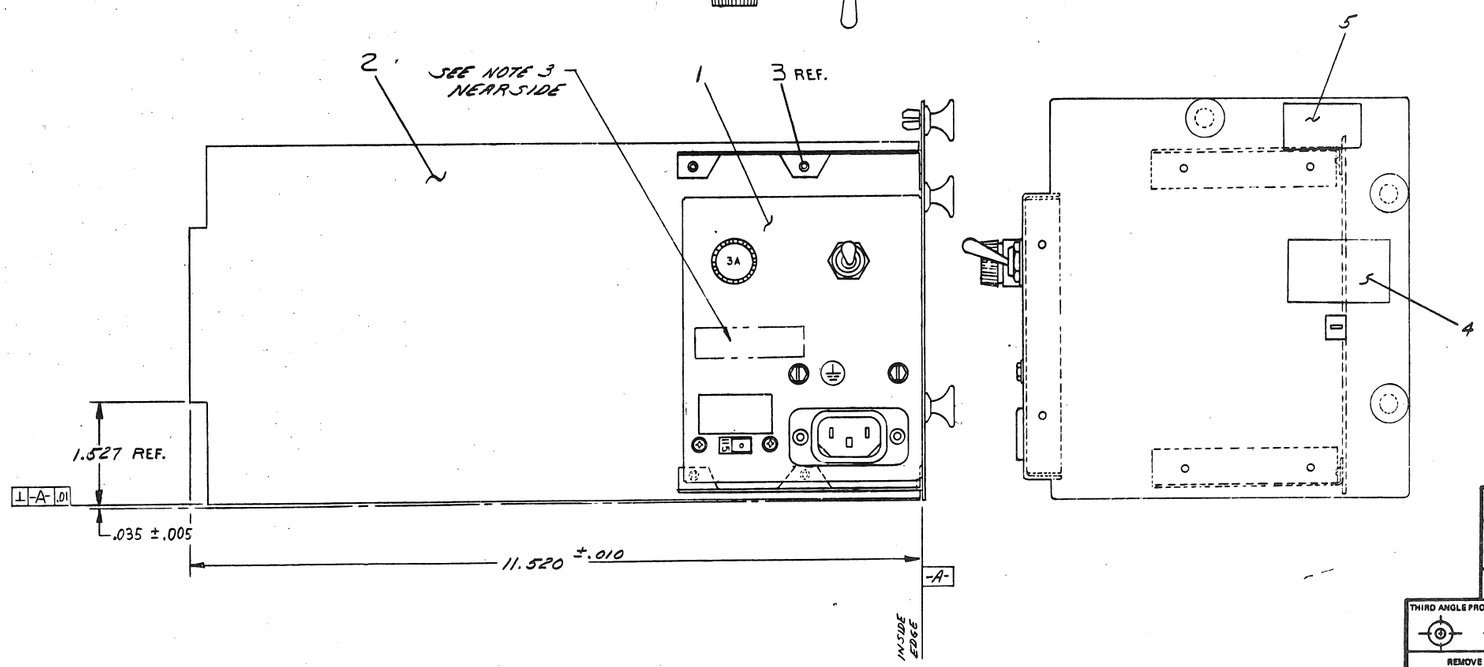

1	LABEL, SERIAL	3613210-02	5
1	LABEL, VT100 DANGER	3615869-00	4
4	SCR. SELF THRD. 6-32 X 5/16	9009967-00	3
1	H7831 POWER SUPPLY	E-UA-5412996-0-0	2
1	EMI FILTER ASSY.	D-IA-7015053-0-0	1
	DESCRIPTION	DWG./PART NO.	ITEM NO.

UNLESS OTHERWISE SPECIFIED DIMENSIONS ARE IN INCHES

ANGLES ±0° 30'	CLASS OF ACCURACY (CHECK ONE)	OVER 0 TO 0.3	OVER 0.3 TO 1.2	OVER 1.2 TO 4.0	OVER 4.0 TO 12.0	OVER 12.0 TO 40.0	OVER 40.0 TO 80.0
SURFACE QUALITY IN MICROINCHES	MEDIUM	±.005	±.008	±.012	±.016	±.024	±.04
	PRECISION	±.012	±.016	±.025	±.04	±.063	±.1

NOMINAL DIMENSION RANGE INCHES

QUANTITY & VARIATION

THIRD ANGLE PROJECTION

REMOVE BURRS AND BREAK SHARP CORNERS

DO NOT SCALE DWG

MATERIAL S.L. PARTS LIST

FINISH —

DRN. D. Boudreau	9 SEPT. 77	FIRST USED ON VT1ØØ
CHK'D J. Fabrowski	20 DEC. 77	digital
ENG.	20 DEC. 77	TITLE POWER SUPPLY ASSY.
PROJ. ENG.	12-20-77	
PROD.	5-10-78	
NEXT HIGHER ASSY.		
E-UA-VT1ØØ-Ø-Ø		SIZE D CODE AD NUMBER 7014979-0-0 REV. A
SCALE 1/1		
SHEET 1 OF 1		DIST.

REVISIONS			
CHK	CHANGE NO.	REV.	
	7014979-0-0	A	
16 August 78			
G. DOUMANI			

DEC FORM NO. 880 100-C

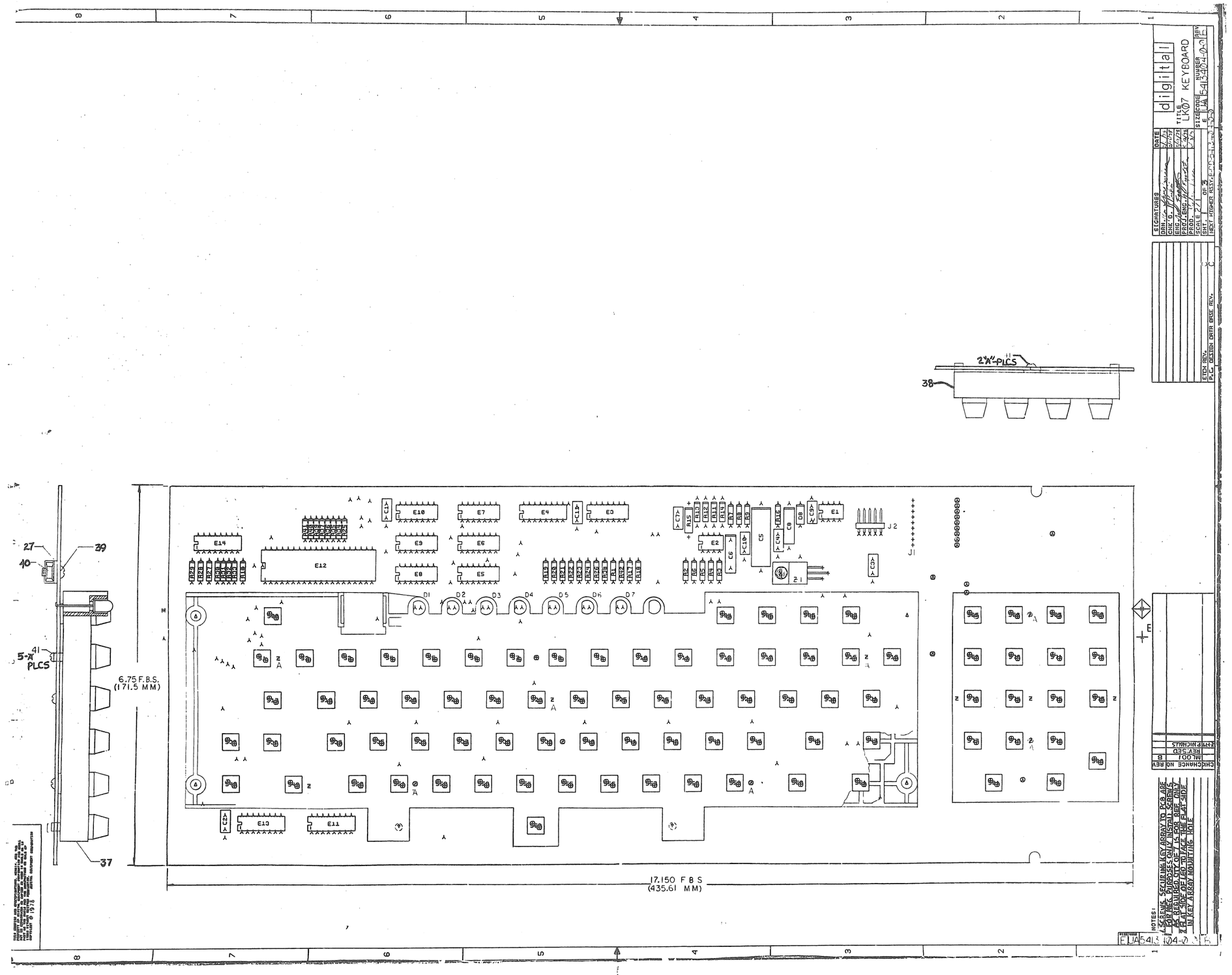
2-A"-PLCS
38
27
39
40
41
5-A PLCS
37
6.75 F.B.S.
(171.5 MM)
17.150 F B S
(435.61 MM)
E14
E12
E10
E7
E4
E3
E9
E6
E8
E5
E13
E11
E2
E1
J2
J1
D1
D2
D3
D4
D5
D6
D7
digital
TITLE
LK07 KEYBOARD
SIZE CODE
E
NUMBER
JA 541304-0-01
REV
F
SCALE 2/1
SHT 1 OF 3
NEXT HIGHER ASSY: 541304-0-00
ETCH REV.
P.C. DESIGN DATA BASE REV.
CHG CHANGE NO. REV
B
DWG DATE
REVISED
ENGINEERING
NOTES:
1. SCREWS SECURING KEY ARRAY TO PCB ARE FOR MECH. PURPOSES ONLY. INSTALL SCREWS AS REQUIRED. QTY OF 15 FOR REF. ONLY.
2. MAXIMUM OF 1.0 TO FACE THE FLAT SIDE TO KEY ARRAY MOUNTING NOTE
THIS DRAWING IS DIGITAL DATA DEC PROPRIETARY AND CONFIDENTIAL. THIS DRAWING MAY NOT BE REPRODUCED OR DISCLOSED TO OTHERS WITHOUT WRITTEN PERMISSION OF DIGITAL EQUIPMENT CORPORATION
COPYRIGHT © 1978 DIGITAL EQUIPMENT CORPORATION
E JA541304-0-01 F

5413404
5013403C-PI

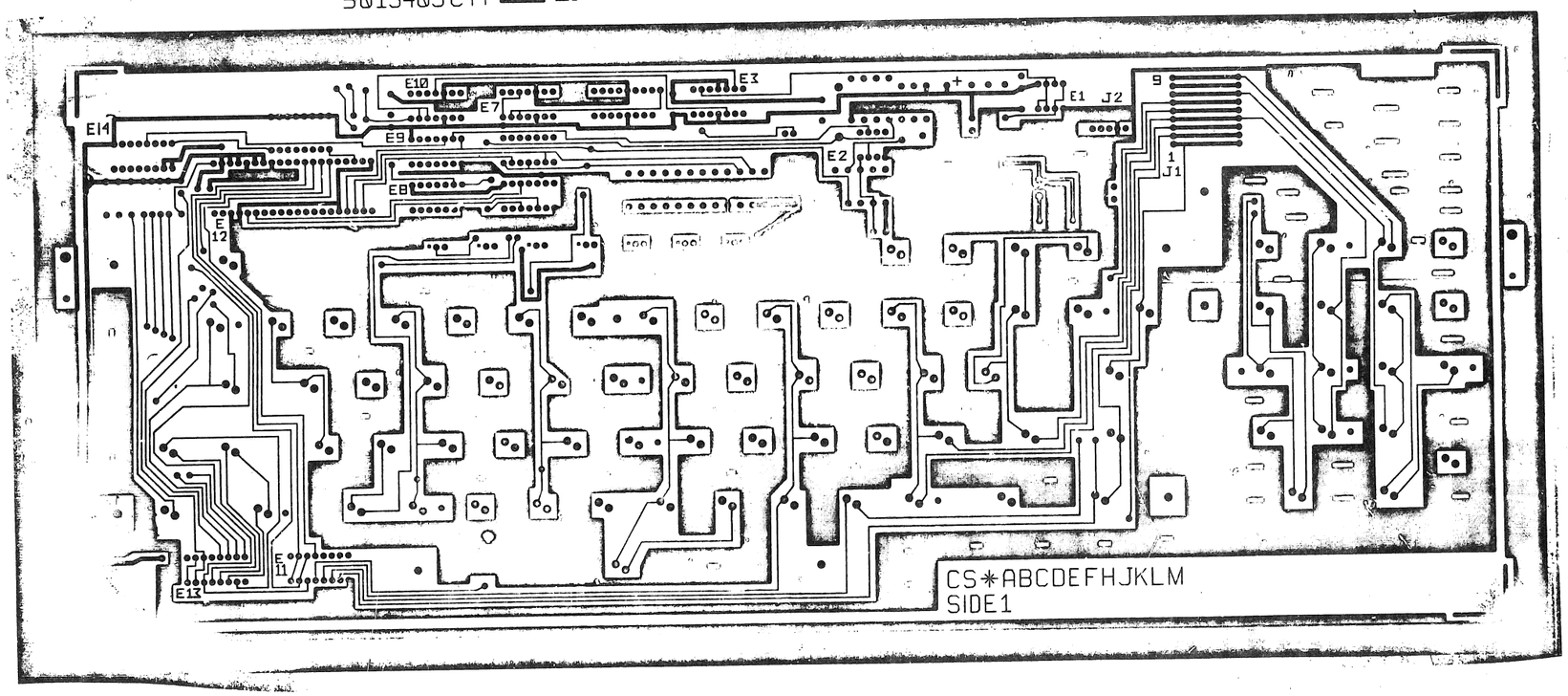

TITLE	SIZE	CODE	NUMBER	REV.
LK07 KEYBOARD	E	UA	5413404-0-0	B

SCALE 2:1 SHEET 2 OF 3

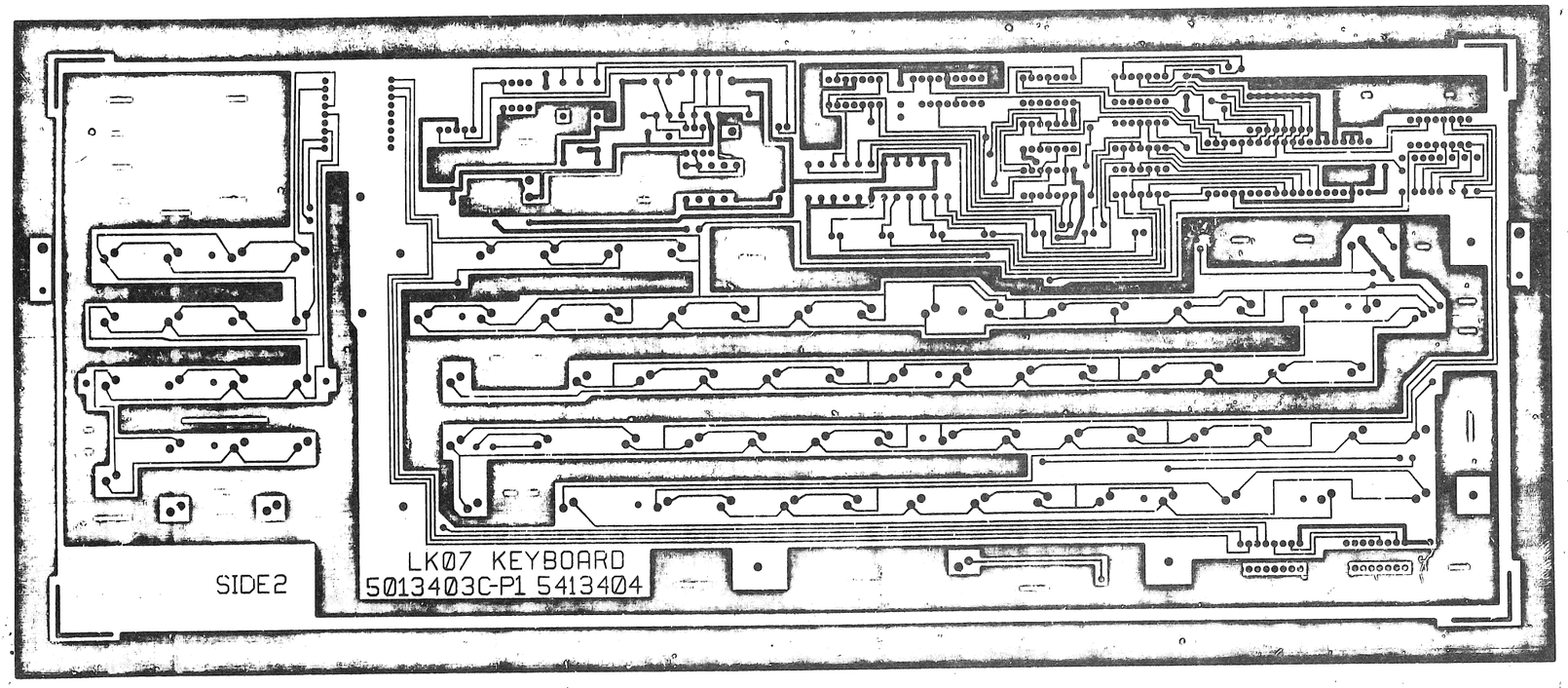

TITLE	SIZE	CODE	NUMBER	REV.
LK07 KEYBOARD	E	UA	541340400	B
SCALE 2:1 SHEET 3 OF 3				

AUTOMATED BY PRTLST.1D(11) P A R T S L I S T SHEET A1 OF A2

LINE	ITEM	DOCUMENT NUMBER	PART NUMBER	DESCRIPTION	QTY PER VARIATION 00	REFERENCE DESIGNATOR
1	1	D-MD-5013403-0-0	5013403-00	DRILL & ETCH DRAWING	1	
2	2		1000011-00	47.0 MMF 100V 5%200PPM DM15S	1	C7
3	3		1000075-00	25 MFD 25V G% 30D AL EL	1	C5
4	4		1001634-00	1600.0 MMF 100V 5%200PPM DM02S	1	C6
5	5		1005306-00	6.8MFD 35V 10% S.TANT	1	C8
6	6		1012784-00	.047 MFD 50V -20+80 CER	7	C1,C2,C4,C9,C10,C11,C3
7	7		1105275-00	D 672 TR= 15NS PIV= 60V SI	1	D8
8	8		1110324-00	LED 1MCD@10MA PIV=3	7	D1-D7
9	9		1215048-00	CONN 5POS RT ANGLE	1	J2
10	10		1300309-00	390 1/4W 5% CC	2	R16,R42
11	11		1300315-00	470 1/2W 5% CC	1	R15
12	12		1300365-00	1 K 1/4W 5% CC	6	R10,R19,R21-R24
13	13		1300439-00	3.3 K 1/4W 5% CC	9	R26-R33,R38
14	14		1300479-00	10 K 1/4W 5% CC	11	R2,R3,R17,R25,R34-R37,R39-R41
15	15		1301401-00	750 1/4W 5% CC	1	R1
16	16		1301425-00	300 1/4W 5% CC	2	R18,R20
17	17		1301874-00	5.6 K 1/4W 5% CC	3	R5,R7,R9
18	18		1302391-00	20 K 1/4W 5% CC	2	R4,R6
19	19		1303155-00	21.5 K 1/4W 1% RN55D-F 100PPM	1	R12
20	20		1303187-00	820 K1/4W 5% CC	1	R8
21	21		1303312-00	10.0 K 1/4W 1% RN55D-F 100PPM	1	R11
22	22		1304833-00	1.96 K 1/4W 1% RN55D-F 100PPM	1	R14
23	23		1309412-00	18.2 K 1/4W 1% RN55D-F 100PPM	1	R13
24	24		1909686-00	7404 INVERTER GATE-HEX 1I	1	E9
25	25		1910406-00	75451 DRIVER,PERIPH,DUAL,	1	E1
26	26		1910741-00	7406 INVERTER GATE-HEX 1I	1	E8
27	27		1912536-00	DEC 7805 VOLT.REG.FIX	1	Z1
28	28		1912649-00	LS75 LATCH 4BIT,BISTABLE	1	E4
29	29		1912799-00	LS00 NAND-GATE-QUAD 2IN,P	1	E5

REVISION HISTORY			BASIC PART NO: 0400000										
ENG	ECO NUMBER	REV	SECTION A OF A	DRN: T. SHETRAWSKI	DATE: 30-MAR-78	D	I	G	I	T	A	L
---	INIT	A	SECTION.VARIATION INDEX	CHK'D: T. SHETRAWSKI	DATE: 30-MAR-78							
R.P	5413404-ML001	B	[A] 00			TITLE PARTS LIST						
			[B]			VT 100 FULL KEYBOARD						
			[C]	DES.ENG: M. MORGESTERN	DATE: 30-MAR-78							
			[D]									
			[E]			DOCUMENT NUMBER						
			[F]	RESP.ENG.: M. MORGESTERN	DATE: 30-MAR-78							
			[H]			SIZE	CODE	NUMBER		REV		
			[J]									
			[K]	MFG.ENG.: T. CORCIARI	DATE: 30-MAR-78	K	PL	5413404-0-DBP		B		
			[L]									
			[M]	ASSEMBLY NUMBER:				FILE NAME:		EDIT #		
			[N]	D-UA-5413404-0-0				13404B.PLS		10		

TB733

AUTOMATED BY PRTLST.1D(11)

P A R T S L I S T

..INE	ITEM	DOCUMENT NUMBER	PART NUMBER	DESCRIPTION	QTY PER VARIATION 00	REFERENCE DESIGNATOR
30	30		1912823-00	LS73 FF-JK DUAL W/CLEAR	1	E3
31	31		1912824-00	LS74 FF-D DUAL,EDGE TRIGG	1	E6
32	32		1912844-00	LS151 MUX 1 OF 8 & DATA	1	E14
33	33		1913949-00	LS93 COUNTER,DECADE,4BIT	2	E7,E10
34	34		1913950-00	LS156 DECODER,2 OF 4(DUAL)	2	E11,E13
35	35		1914156-00	LM 393 VOLT.COMPARATOR DUAL	1	E2
36	36		2114137-51	UART MOS N-CHANNEL $	1	E12
37	37		7013910-00	KEYBOARD ARRAY ASSY	1	
38	38		7014561-00	18 KEY NUMERIC PAD ASSY	1	
39	39		9006020-01	SCREW,PAN ,PHIL, 6-32X 1/4	1	
40	40		9008185-00	NUT,KEP , 6-32X1/4 AF	1	
41	41		9010033-00	SCREW,PAN,PHILLIPS, 4-24 X 3/8	7	

D I G I T A L	TITLE VT 100 FULL KEYBOARD	SECTION A OF A	SIZE K	CODE FL	DOCUMENT NUMBER 5413404-0-DBP	REV B

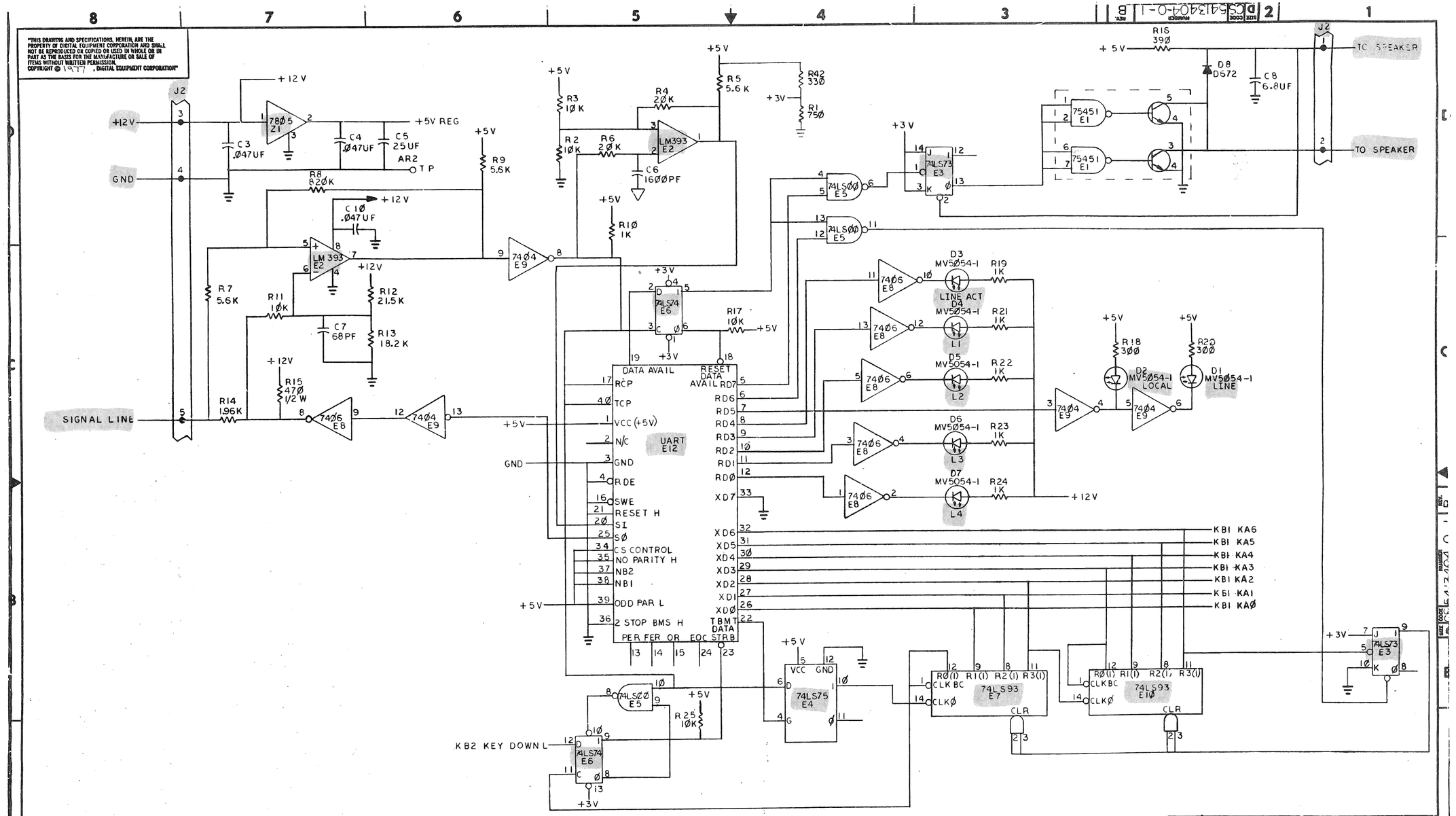

DRN.		29NOV77
CHK'D		6/3/78
ENG.		12 MAY 78
PROJ. ENG.		12 MAY 78
PROD.		6/13/78
NEXT HIGHER ASSY.		
D-DD-5413404-0-0		
SCALE		
SHEET	OF 5	

FIRST USED ON: VT1ØØ

digital

TITLE: VT1ØØ FULL KEYBOARD (KB1)

SIZE	CODE	NUMBER	REV.
D	CS	5413404-0-1	B

DIST.

REVISIONS		
CHANGE NO.		REV.
CHK	MLD01	B
	P. NICHOLLS	
	R. PUCCI	

DEC FORM NO.

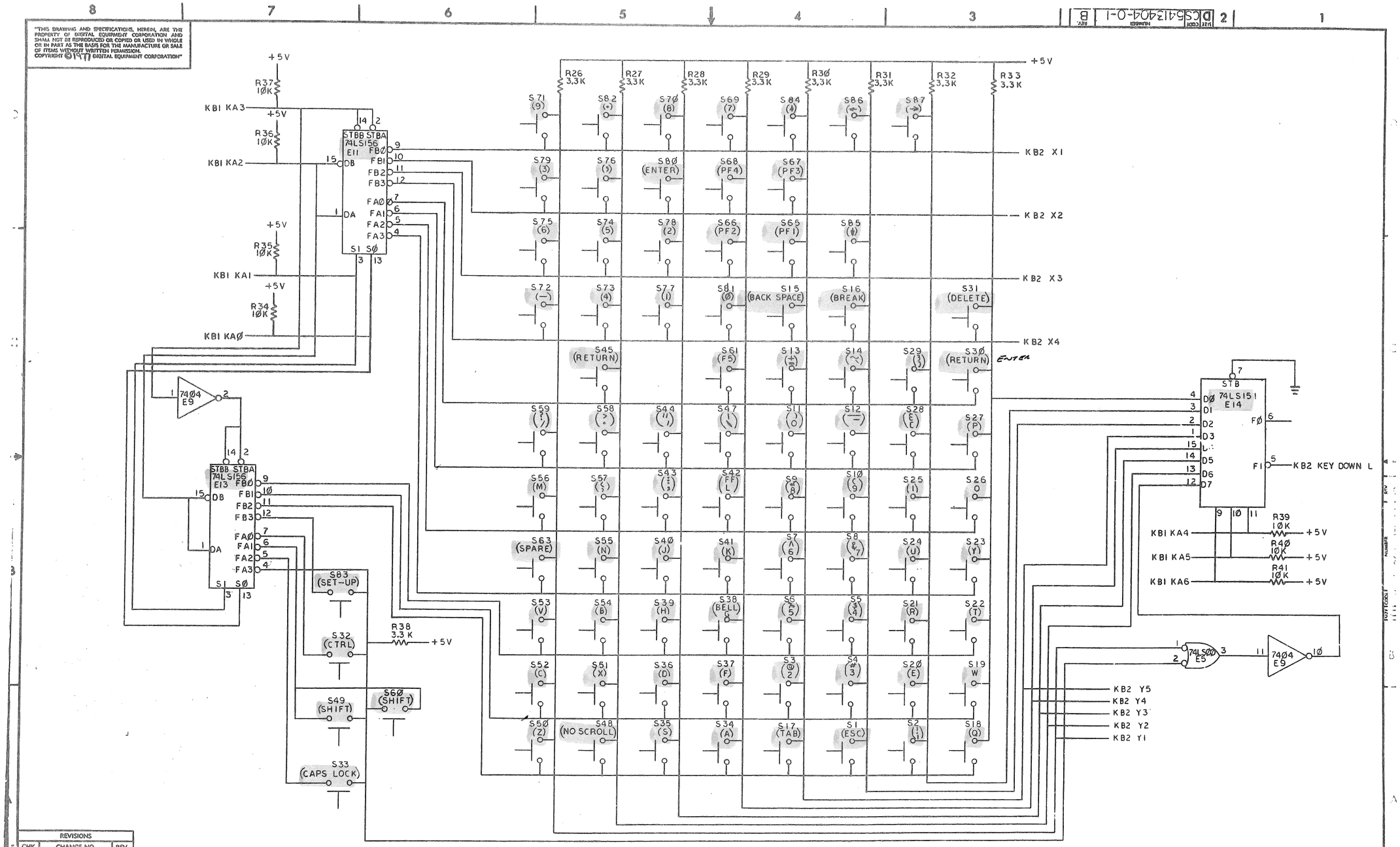

REVISIONS		
CHK	CHANGE NO.	REV.

TITLE	SIZE	CODE	NUMBER	REV.
VTIØØ FULL KEYBOARD (KB2)	D	CS	5413404-0-1	B
SCALE —/—	SHEET 2 OF 3	DIST.		

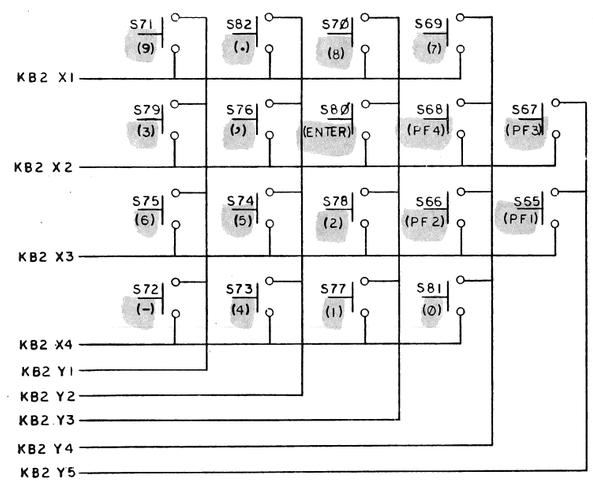

REVISIONS		
CHK	CHANGE NO.	REV.

TITLE	SIZE	CODE	NUMBER	REV.
VT100 FULL KEYBOARD (KB3)	D	CS	5413404-0-1	B
SCALE — / — SHEET 3 OF 3	DIST.			

NOTES:

1. THE NUMERIC KEY PAD IS NOT AVAILABLE ON THE E-UA-5413404-01 VARIATION.
2. STANDARD VT100 BASIC KEYCAP SET (12/14333-72, ITEM 5) AND NUMERIC PAD (12/14333-91, ITEM 6) SHOWN. FOR KEYCAP ARRANGEMENTS REFER TO DEC DRAWING NUMBER D-AR-7015765-0-1.

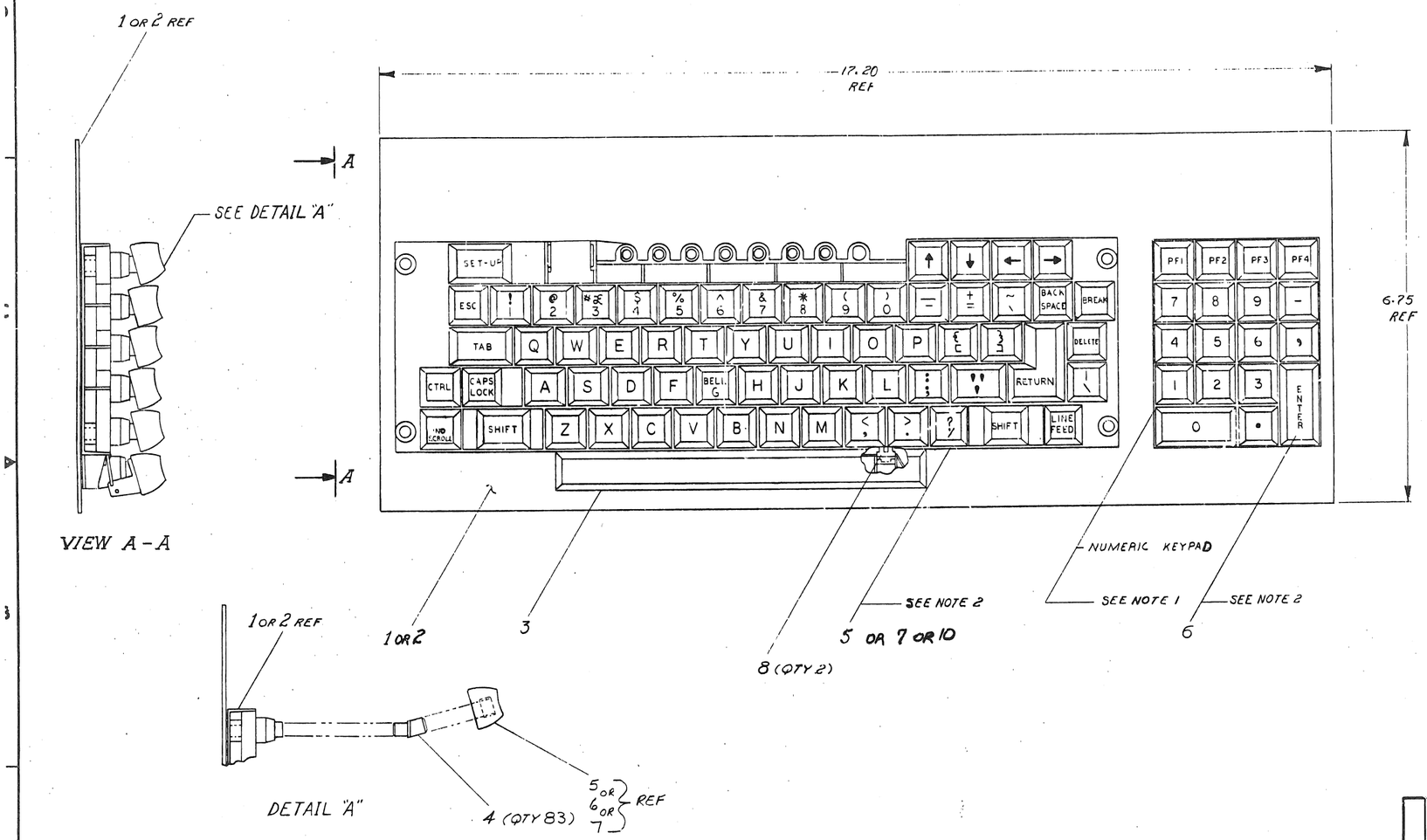

OFF SHEET PARTS LIST EXISTS
SEE C-PL-7015765-0-0

DESCRIPTION	DWG./PART NO.	ITEM NO.
UNLESS OTHERWISE SPECIFIED DIMENSIONS ARE IN INCHES		

ANGLES ±0° 30'	CLASS OF ACCURACY (CHECK ONE)	NOMINAL DIMENSION RANGE INCHES: OVER 0 TO 0.2	OVER 0.2 TO 1.2	OVER 1.2 TO 4.0	OVER 4.0 TO 12.0	OVER 12.0 TO 40.0	OVER 40.0 TO 80.0
SURFACE QUALITY IN MICRO-INCHES	MEDIUM	±.004	±.008	±.012	±.016	±.024	±.04
	PREFERRED	±.012	±.016	±.025	±.04	±.063	±0.1

QUANTITY & VARIATION

THIRD ANGLE PROJECTION

REMOVE BURRS AND BREAK SHARP CORNERS

DO NOT SCALE DWG

MATERIAL: SEE PARTS LIST

FINISH: NONE

DRN.	Richard Sa...	3-28-78
CHK'D	D. Tracy	28 APR 78
ENG.	E. Wedekind	15 MAY 78
PROJ. ENG.	[illegible]	17 MAY 78
PROD.	[illegible]	5-10-78

NEXT HIGHER ASSY.: B-DD-7015765-0

SCALE: NONE

SHEET 1 OF 1

FIRST USED ON: VT100

digital

TITLE: KEY BOARD/ KEY CAP ASSY

SIZE	CODE	NUMBER	REV.
D	AD	7015765-0-0	B

DIST.

REVISIONS

CHK	CHANGE NO.	REV.		
	7015765-MLQ01	A	W. WEDEKING	15 SEPT 78
	7015765-MLQ02	B	L. KING	1-8-79

MASTERSPACE 9-493

DEC FORM NO. DRD 150-C

ITEM NO.	DWG. NO/PART NO.	DESCRIPTION	7015765-00	7015765-01	7015765-02	7015765-03
1	E-AD-5413404-00-0	KEYBOARD ASSY (82 KEY)	1	-	1	1
2	E-AD-5413404-01-0	KEYBOARD ASSY (64 KEY)	-	1	-	-
3	C-AD-7015050-00-0	SPACE BAR ASSY	1	1	1	1
4	C-PS-1214332-00	ADAPTER KEYCAP	83	65	83	83
5	1214333-72	KEYCAP SET (BASIC SET VT1ØØ)	1	1	-	-
6	1214333-91	KEYCAP SET (BASIC NUM. PAD)	1	-	-	-
7	1214333-C0	DECFORM KEY CAP SET	-	-	1	-
8	C-MD-7420120-00-0	CLIP, EQUALIZER BAR	2	2	2	2
9	D-AR-7015765-0-1	KEYCAP ARRANGEMENT (MAIN&NUMERIC)	REF	REF	REF	REF
10	1214333-JØ	WORD PROCESSING KEY CAP SET	-	-	-	1

REVISIONS		
CHK	CHANGE NO.	REV.
[illegible]	7015765-ML001	A
[illegible]	7015765-ML002	B

DRN. ANGEL COLON	APR 3 1978	FIRST USED ON VT1ØØ
CHK'D D.HEALY	APR 7 78	digital
ENG. [illegible]	10 MAY 78	TITLE
PROJ. ENG [illegible]	10 MAY 78	KEYBOARD/KEYCAP ASSEMBLY
PROD. [illegible]	10 MAY 78	
NEXT HIGHER ASSY.		
D-AD-7015765-0-0		SIZE C / CODE PL / NUMBER 7015765-0-0 / REV. B
SCALE —		
SHEET 1 OF 1		DIST.

DEC FORM NO. DRC 110 A

NOTES:

1. THE FOLLOWING TABLE (SHEET 2) LISTS VARIATION NUMBERS FOR 1214333 (KEYCAPS) INDICATING THE SPECIFIC KEYBOARD POSITION OF EACH AS USED ON VARIOUS MODELS.

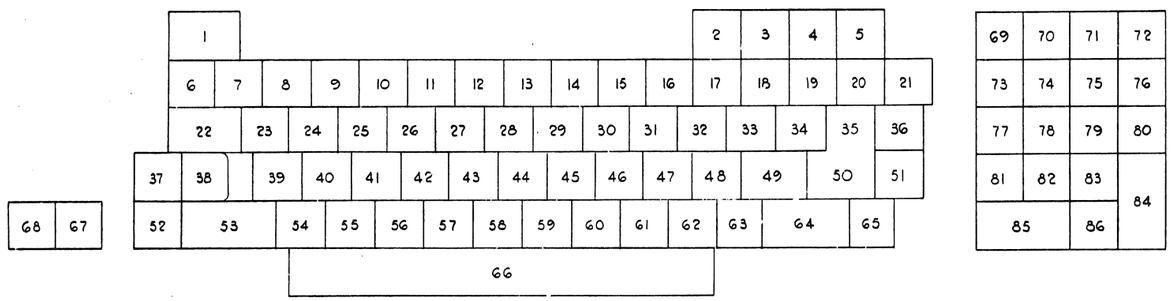

KEYBOARD CAP POSITIONS
(SEE NOTE 1 & TABLE, SHEET 2)

DESCRIPTION								CW:/PART NO.	ITEM NO.
UNLESS OTHERWISE SPECIFIED DIMENSIONS ARE IN INCHES									
ANGLES ±30'	CLASS OF ACCURACY (CHECK ONE)	NOMINAL DIMENSION RANGE INCHES							
SURFACE QUALITY IN MICROINCHES		OVER 0 TO 0.2	OVER 0.2 TO 1.2	OVER 1.2 TO 4.0	OVER 4.0 TO 12.0	OVER 12.0 TO 40.0	OVER 40.0 TO 80.0		
	MEDIUM ☐	±.004	±.008	±.012	±.016	±.024	±.04		
	PREFERRED ☐	±.012	±.016	±.025	±.04	±.063	±0.1		

QUANTITY & VARIATION

THIRD ANGLE PROJECTION

REMOVE BURRS AND BREAK SHARP CORNERS

DO NOT SCALE DWG

MATERIAL

FINISH

DRN. Pinkard	28 JUN 78	FIRST USED ON VT100 digital
CHK'D J Brigham	28 Nov 78	TITLE KEYBD CAP-POSITION ARRANGEMENT
ENG. F Wenskay	28 Nov 78	
PROJ. ENG.	12-21-78	
PROD.	21 JUN 78	
NEXT HIGHER ASSY. D-AD-7015765-0-0		
SCALE NONE		SIZE D · CODE · NUMBER AR 7015765-0-1 · REV. A
SHEET 1 OF 2		DIST.

REVISIONS		
CHK	CHANGE NO.	REV.
	7015765-M002	A

L. KING

DEC FORM NO. DRD 100-C

KEYCAP VARIATION (1214333-XX) POSITIONS (SEE NOTE 1, SHEET 1)

KEYBOARD CAP-POSITIONS (SEE SHEET 1)	1	2	3	4	5	6	7	8	9	10	11	12	13	14	15	16	17	18	19	20	21	22	23	24	25	26	27	28	29	30	31	32	33	34	35/50	36	37	38	39	40	41	42
VT100/(1214333-72 & BASIC (1214333-91)	46	67	68	69	70	47	25	26	27	28	29	30	31	32	33	34	35	36	37	44	45	40	15	21	05	16	18	23	19	09	13	14	38	39	43	48	50	42	01	17	04	06
LA120 (1214333-64 & BASIC (1214333-91)	46	59	62	60	61	47	25	26	27	28	29	30	31	32	33	34	35	36	37	44	45	40	15	21	05	16	18	23	19	09	13	14	38	39	43	48	50	42	01	17	04	06
LA34 (1214333-91 & BASIC (1214333-95)	46	92	92	62	61	47	25	26	27	28	29	30	31	32	33	34	35	36	37	44	45	40	15	21	05	16	18	23	19	09	13	14	38	39	43	48	50	42	01	17	04	06
VT100 -NA & -NB DECFORM (1214333-C0)	46	96	97	98	99	47	25	26	27	28	29	30	31	32	33	34	35	36	37	44	45	40	15	21	05	16	18	23	19	09	13	14	38	39	43	A0	50	42	01	17	04	06
VT100-WA & WB WORD PROC (1214333-J0)	46	E8	E9	F0	E1	47	25	26	27	28	29	30	31	32	33	34	E4	E5	E6	E7	45	40	D8	21	05	D9	E0	23	19	09	13	E1	E2	39	D6	E3	50	42	DB	17	D1	D2

KEYBOARD CAP-POSITIONS (SEE SHEET 1)	43	44	45	46	47	48	49	51	52	53	54	55	56	57	58	59	60	61	62	63	64	65	67	68	69	70	71	72	73	74	75	76	77	78	79	80	81	82	83	84	85	86
VT100/(1214333-72 & BASIC (1214333-91)	07	08	10	65	66	53	52	51	71	41	24	22	03	20	02	12	11	54	55	56	41	49	–	–	87	88	89	90	80	81	82	83	77	78	79	84	74	75	76	86	73	85
LA120 (1214333-64 & BASIC (1214333-91)	07	08	10	57	58	53	52	51	63	41	24	22	03	20	02	12	11	54	55	56	41	49	–	–	87	88	89	90	80	81	82	83	77	78	79	84	74	75	76	86	73	85
LA34 (1214333-91 & BASIC (1214333-95)	07	08	10	65	66	53	52	51	63	41	24	22	03	20	02	12	11	54	55	56	41	49	94	93	87	68	89	90	80	81	82	83	77	78	79	84	74	75	76	86	73	85
VT100 -NA & -NB DECFORM (1214333-C0)	07	08	10	65	66	53	52	51	71	41	24	22	03	20	02	12	11	54	55	56	41	A1	–	–	A2	A3	A4	A5	B7	B8	B9	A7	B4	B5	B6	A8	B1	B2	B3	B0	A6	A9
VT100-WA & WB WORD PROC (1214333-J0)	D3	08	10	65	D4	53	D5	D7	71	41	24	22	C1	C2	C3	C4	C5	C6	C8	C7	41	C9			F2	F3	F4	F5	F6	F7	F8	F9	H0	H1	H2	H3	H4	H5	H6	H9	H7	H8

REVISIONS		
CHK.	CHANGE NO.	REV.

TITLE KEYBD CAP-POSITION ARRANGEMENT	SIZE	CODE	NUMBER	REV.
	D	AR	7015765 - 0 - 1	A
SCALE NONE	SHEET 2 OF 2	DIST.		

DEC FORM NO. SRD 137

WIRE TABLE

ITEM NO	DESCRIPTION AWG	COLOR	FROM CONN.	WITH	TO CONN	WITH	REMARKS
5	18	RED	P1-22	4	P2-18	4	
		ORN	P1-21		P2-17		
		GRN	P1-20		P2-16		
		BLU	P1-19		P2-15		
		GRY	P1-18		P2-14		
		WHT	P1-17		P2-13		
		BLK	P1-16		P2-12		
		RED	P1-15		P2-11		
		ORN	P1-14		P2-10		
		GRN	P1-13		P2-9		
		BLU	P1-12		P2-8		
		GRY	P1-11		P2-7		
		WHT	P1-10		P2-6		
		BLK	P1-9		P2-5		
		RED	P1-8		P2-4		
5		ORN	P1-7		P2-3		
6		GRN	P1-4		P3-9		
		BLU	P1-3		P3-8		
		GRY	P1-2		P3-10		
6		WHT	P1-1	4	P3-6		
10		GRN.	P4	9	P3-5		GRD.
6		ORG	P2-1	4	P3-7		
6	18	ORG	P2-2	4	P3-1	4	

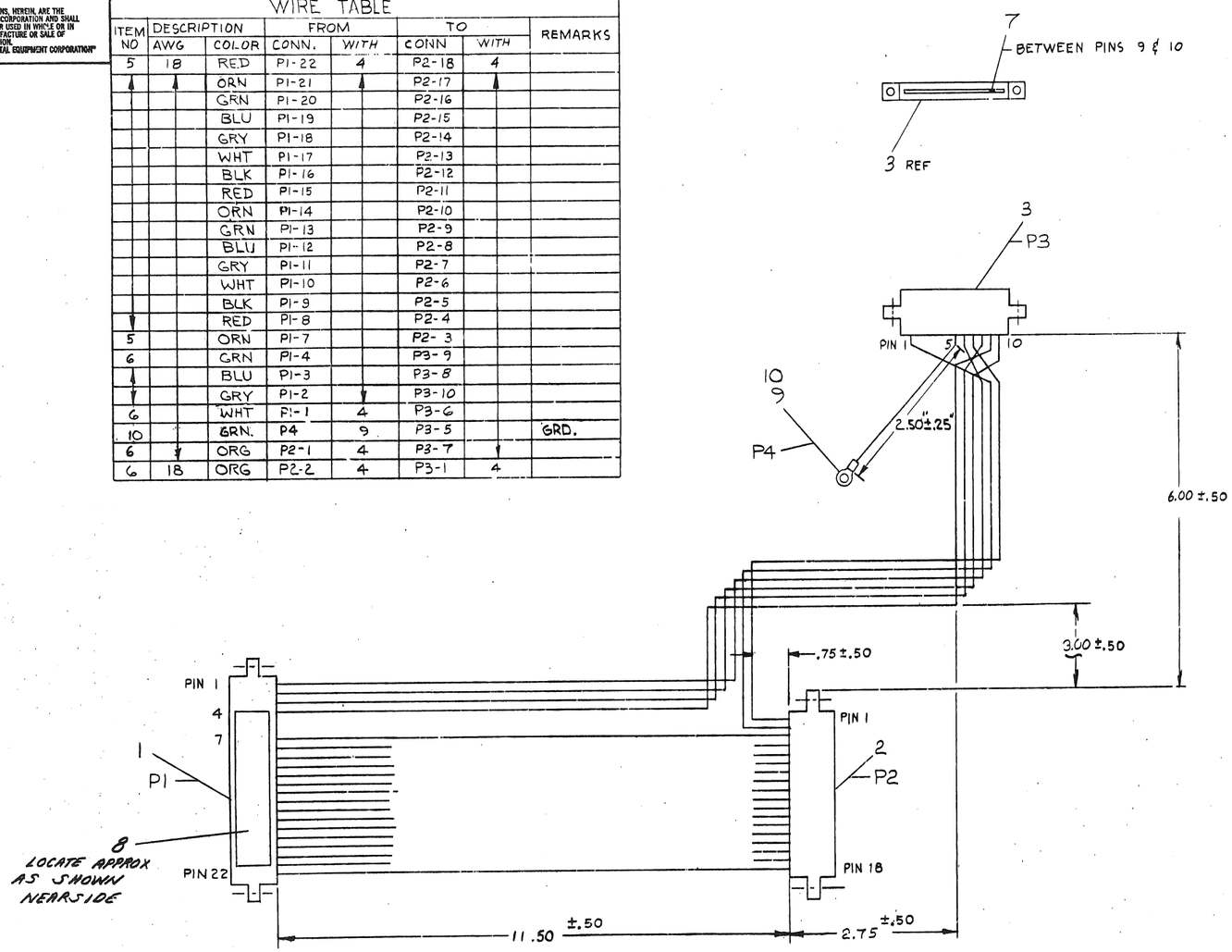

NOTES:

1. IDENTIFICATION: DECAL USING 1/8" CHARACTER HEIGHT AS INDICATED BELOW TO HIGHEST LEVEL OF SUBASSEMBLY SPECIFIED ON PURCHASE ORDER AND LOCATE APPROX. AS SHOWN ON DRAWING.
   A.) PART NUMBER
   B.) REVISION
   C.) VENDOR IDENTIFICATION
   D.) DATE, CODE

A/R	DESCRIPTION	DWG./PART NO.	ITEM NO.
	CABLE, STRANDED (GRN)	9107360-55	10
1	RING, TERMINAL	9007929-00	9
1	LABEL, IDENTIFICATION	3615300-00	8
1	PLUG, KEY	1213909-00	7
1	CABLE, 6 COND. FLAT	1700125-00	6
1	CABLE, 16 COND. FLAT	1700125-01	5
44	PIN, CRIMP	1213806-02	4
1	CONN. HOUSING (10 PIN)(P3)	1213803-00	3
1	CONN. HOUSING (18 PIN)(P2)	1213803-01	2
1	CONN. HOUSING (22 PIN)(P1)	1213803-02	1

UNLESS OTHERWISE SPECIFIED DIMENSIONS ARE IN INCHES

ANGLES ±30' 30'	CLASS OF ACCURACY (CHECK ONE)	OVER 0 TO 0.3	OVER 0.3 TO 1.2	OVER 1.2 TO 4.0	OVER 4.0 TO 12.0	OVER 12.0 TO 40.0	OVER 40.0 TO 80.0
SURFACE QUALITY IN MICROINCHES	MEDIUM	±.004	±.008	±.012	±.016	±.024	±.04
	PREFERRED	±.012	±.016	±.025	±.04	±.063	±0.1

QUANTITY & VARIATION

THIRD ANGLE PROJECTION

REMOVE BURRS AND BREAK SHARP CORNERS

DO NOT SCALE DWG

MATERIAL SEE PARTS LIST

FINISH —/—

DRN. 9 DEC 77
CHK'D. 85 PER
ENG. 10 MAY 78
PROJ. ENG. 17 MAY 78
PROD. 5-10-78

NEXT HIGHER ASSY. E-UA-VT100-0-0

SCALE NONE

SHEET 1 OF 1

FIRST USED ON VT100

digital

TITLE POWER CABLE ASSY

SIZE	CODE	NUMBER	REV.
D	IA	7014978-0-1	A

DIST.

REVISIONS			
CHK	CHANGE NO.	REV.	
690	7014978-ML001	A	

J. BITTO

Released Pers. 12-13-78

DEC FORM NO. DRD 100-C

NOTES:

1. INSERT CONN. (ITEM 3) INTO CONN. OF (ITEM 2) FOR TESTING OPTION.
2. PACKAGING: WHEN SHIPPED, MATERIAL SHALL BE ADEQUATELY PROTECTED FROM HANDLING AND SHIPPING DAMAGE USING DIGITAL PACKAGING INSTRUCTION A-SP-3700380-09
3. LOCATE APPROX. AS SHOWN ON DWG.
4. TORQUE (ITEM 6) TO 2.5 IN-LBS ± .5 IN-LBS.

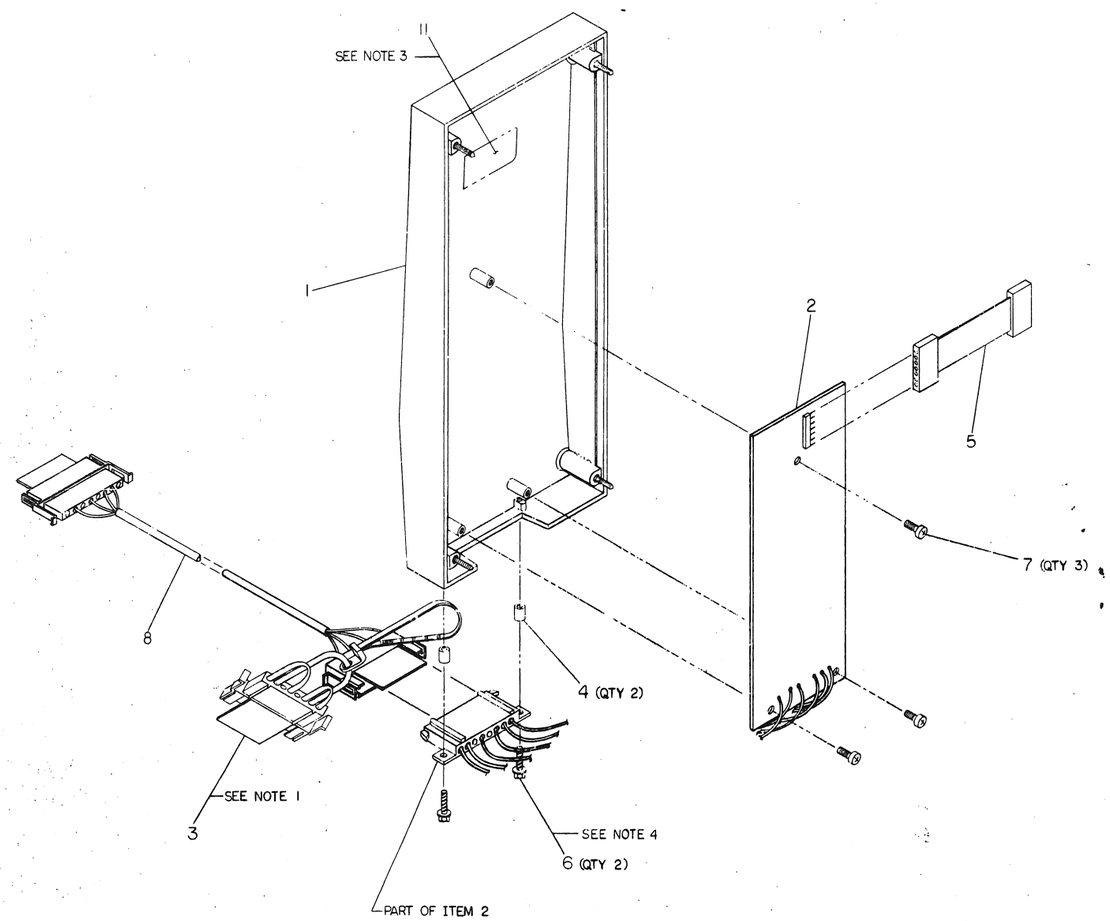

1	LABEL, ADH. BACKED (SER. NO.)	A-PS-3603210-02	11
1	SHIPPING LIST	B-PL-VT1XX-A	10
1	PACKAGING INSTRUCTIONS	A-SP-3700380-09	9
1	CABLE INTERFACE (BC05F)	C-UA-BC05F-15-0	8
3	SCR, SEMS, #6-32 X .312 LG	9009701-00	7
2	SCR, SELF TAP, #6-20 X .62 LG	9010097-00	6
1	CABLE, INTERNAL	C-IA-7015506-0B	5
2	SPACER, ROUND, .25 X .25	9009672-02	4
1	20 MA LOOPBACK CONN.	D-IA-7015503-0-0	3
1	20 MA ADAPTER ASSY	C-IA-7015273-0-0	2
1	WORT BOX ASSY	D-IA-7014976-0-0	1
	DESCRIPTION	NO./PART NO.	ITEM NO.

UNLESS OTHERWISE SPECIFIED DIMENSIONS ARE IN INCHES

ANGLES ±0°30'	CLASS OF ACCURACY (CHECK ONE)	NOMINAL DIMENSION RANGE INCHES						
SURFACE QUALITY IN MICROINCHES		OVER 0 TO 0.3	OVER 0.3 TO 3	OVER 3 TO 6	OVER 6 TO 12	OVER 12 TO 48	OVER 48 TO 120	OVER 120 TO 480
	MEDIUM	±.004	±.006	±.012	± .18	±.024	±.04	
	PREFERRED	±.012	±.018	±.025	.06	±.063	±0.1	

QUANTITY & VARIATION

THIRD ANGLE PROJECTION.

REMOVE BURRS AND BREAK SHARP CORNERS

DO NOT SCALE DWG

MATERIAL: SEE PARTS LIST

FINISH

DRN. [illegible] 7-26-78
CHK'D [illegible] 7-26-78
ENG. [illegible] 7-26-78
PROJ. ENG. [illegible] 7-27-78
PROD. [illegible]

NEXT HIGHER ASSY.: B-DD-VT1XX-AA

SCALE 1/1

SHEET 1 OF 1

FIRST USED ON: VT1ØØ

TITLE: 2ØMA CURRENT LOOP OPTION

SIZE: B | CODE: UA | NUMBER: VT1XX-AA-Ø | REV. A

DIST.

REVISIONS			
SYM	DESCRIPTION	DATE	APPR
A	VT1XX-AA MLP01	7-26-78	

C. DOUMANI

COMPONENT SIDE VIEW

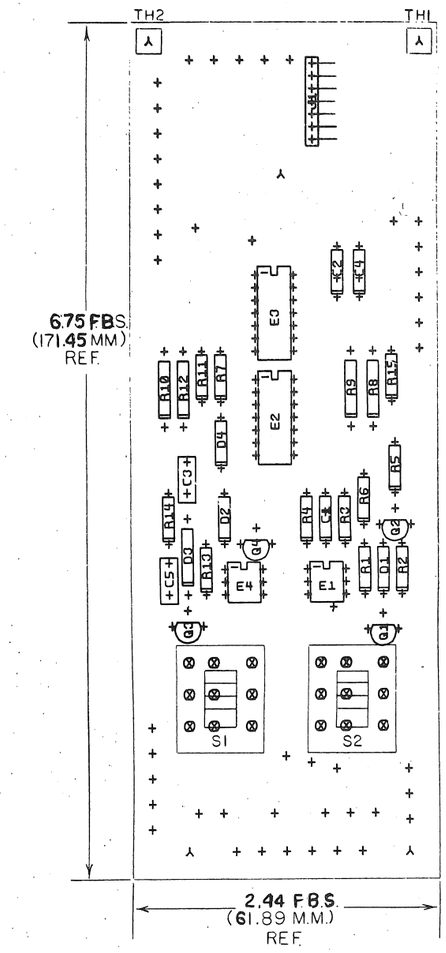

NOTES:

CHK	CHANGE NO	REV

ETCH REV.	C
P.C. DESIGN DATA BASE REV.	C

SIGNATURES	DATE
DRN.	11-16-77
CHK'D.	11-17-77
ENG.	4-13-78
PROJ. ENG.	5/12/78
PROD.	6/13/78
SCALE 2/1	
SHT. 1 OF 3	
NEXT HIGHER ASSY. B-DD-5413206-0	

digital

TITLE 20 MA-ADAPTER

SIZE	CODE	NUMBER	REV
D	UA	5413206-0-0	B

MS# 180025

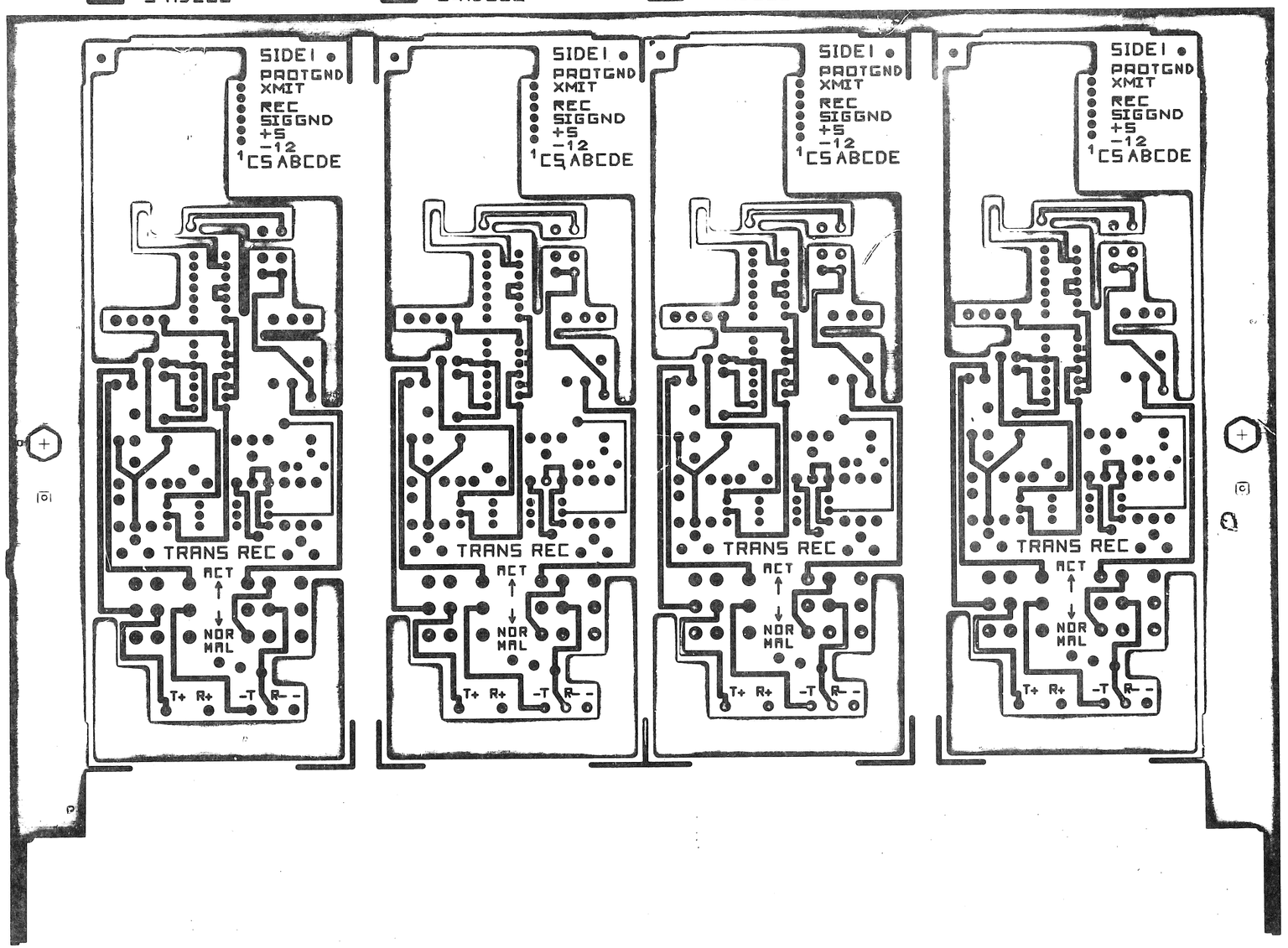

VIEWED FROM SIDE 1

REVISIONS		
CHK	CHANGE NO	REV

TITLE	SIZE	CODE	NUMBER	REV.
20MA ADAPTOR	D	UA	5413206-0-0	B
SCALE 2:1	SHEET 2 OF 3	DIST		

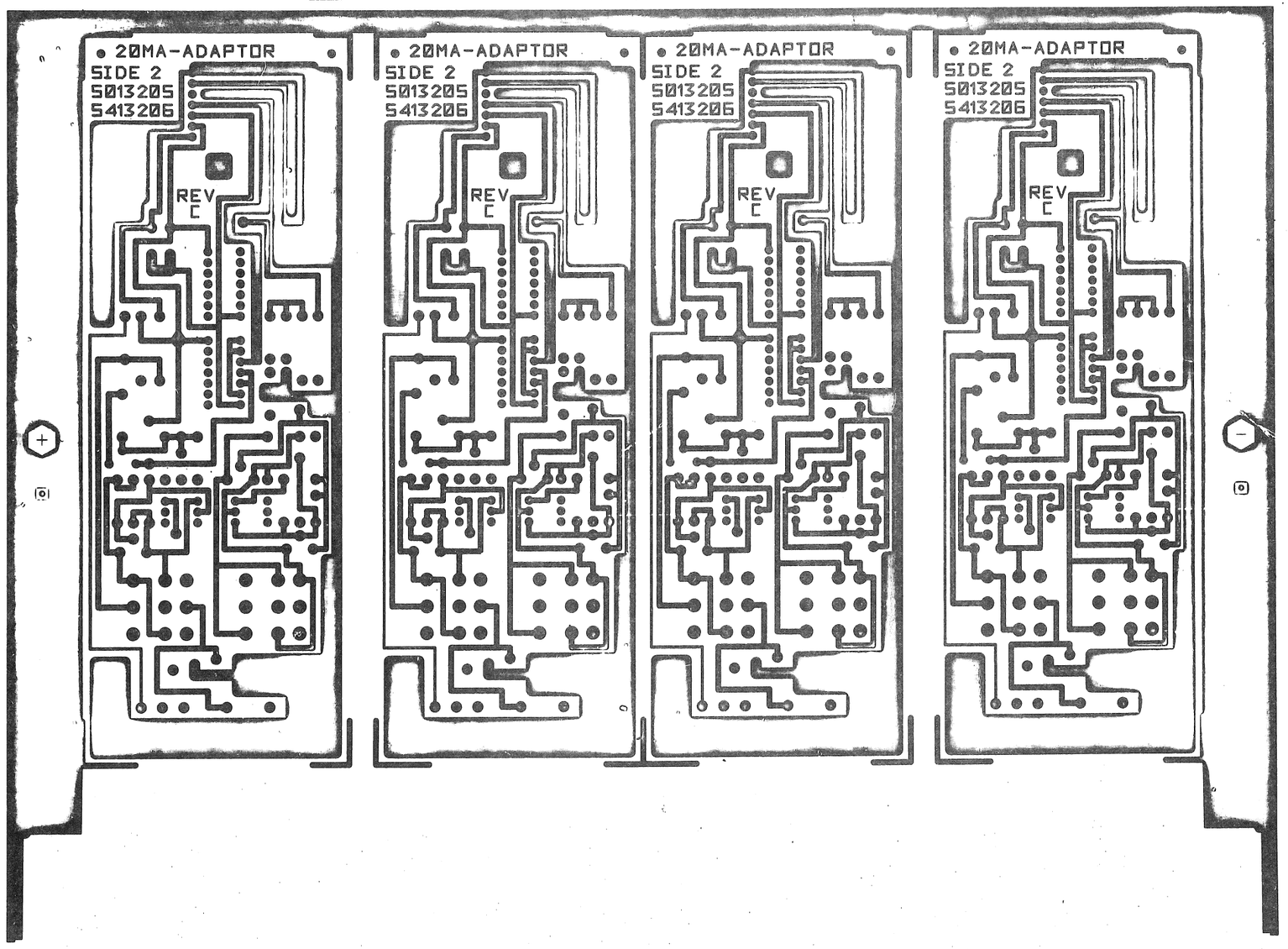

VIEWED FROM SIDE 2

REVISIONS		
CHK	CHANGE NO	REV

TITLE	SIZE	CODE	NUMBER	REV
20 MA ADAPTOR	D	UA	5413206-0-0	B
SCALE 2:1 SHEET 3 OF 3	DIST			

DLUA 5413206-0-0 B

LINE	ITEM	DOCUMENT NO.	PART NO.	DESCRIPTION	QTY	REFERENCE DESIGNATORS
1	1	D-MD-5013205-0-0	5013205-00	ETCH BOARD FOR 5413206	1	
2	2		1000022-00	270.0 MMF 100V 5%200PPM DM15S (10-00	2	C3,C5
3	3		1001610-00	.01 MFD 50V Z5U 309CER/8000PF MIN	3	C1,C2,C4
4	4		1105275-00	D 672 TR= 15NS PIV= 60V SP	3	D1,D2,D4
5	5		1105610-00	MCL1301 CL@1MA FROM10-80V	1	D3
6	6		1215048-01	CONN 7POS RT ANGLE	1	J1
7	7		1215089-00	SW,SLIDE 3P 1A DBLE THROW	2	S1,S2
8	8		1300197-00	33 1/4W 5% CC (13-00	1	R2
9	9		1300250-00	150 1/4W 5% CC (13-00	2	R11,R15
10	10		1300296-00	330 1/2W 5% CC (13-00	4	R8,R9,R10,R12
11	11		1300309-00	390 1/4W 5% CC (13-00	2	R1,R14
12	12		1300391-00	1.5 K 1/4W 5% CC (13-00	1	R7
13	13		1300444-00	3.9 K 1/4W 5% CC (13-00	1	R6
14	14		1300539-00	120 K 1/4W 5% CC (13-00	1	R4
15	15		1301327-00	68 K 1/4W 5% CC (13-00	1	R13
16	16		1301401-00	750 1/4W 5% CC (13-00	1	R3
17	17		1301422-00	7.5 K 1/4W 5% CC (13-00	1	R5
18	18		1509338-00	DEC6531B NPN 310MW SI 40 90 P	2	Q1,Q2
19	19		1510705-00	XA 05 NPN 500MW SI 60 50 P	1	Q4
20	20		1510706-00	XA 55 PNP 500MW SI 60 50 P	1	Q3
21	21		1911998-01	4N26-10PTO COUPLED ISLTR 6 P	2	E1,E4
22	22		1912817-00	LS37 NAND GATE-QUAD 2IN,POS	1	E2
23	23		1913130-00	DEC 1489A RECEIVER,LINE,QUAD,EIA RS-232	1	E3

REVISION HISTORY			VARIATIONS FOR THIS ASSY.
CHK	ECO NO	REV	
---	INIT	B	00

FIRST USED ON: VT100

MADE BY:	T. SHETRAWSKI	DATE: 30-MAR-78
CHECKED:	T. SHETRAWSKI	DATE: 30-MAR-78
DSN.ENG.:	M. MORGENSTERN	DATE: 30-MAR-78
PROD.:	T. CORCIARI	DATE: 30-MAR-78
RESP.ENG.:	M. MORGENSTERN	DATE: 30-MAR-78

DIGITAL EQUIPMENT CORPORATION
MAYNARD, MASSACHUSETTS

TITLE PARTS LIST

20 MA ADAPTER

SIZE	CODE	DOCUMENT NUMBER	REV
K	PL	5413206-0-DBP	B

ASSY.NO.: D-UA-5413206-0-0 EDIT# 3

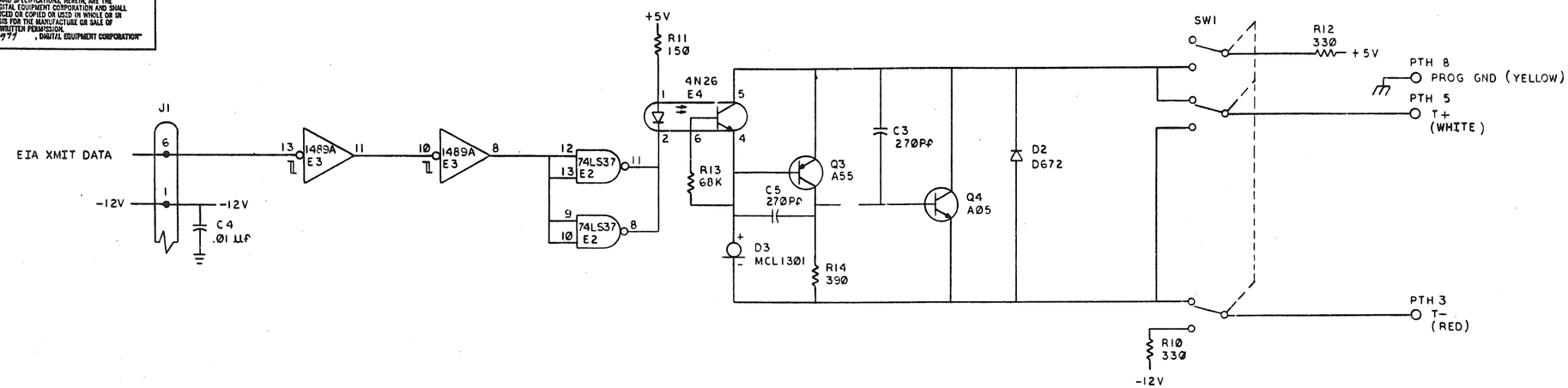

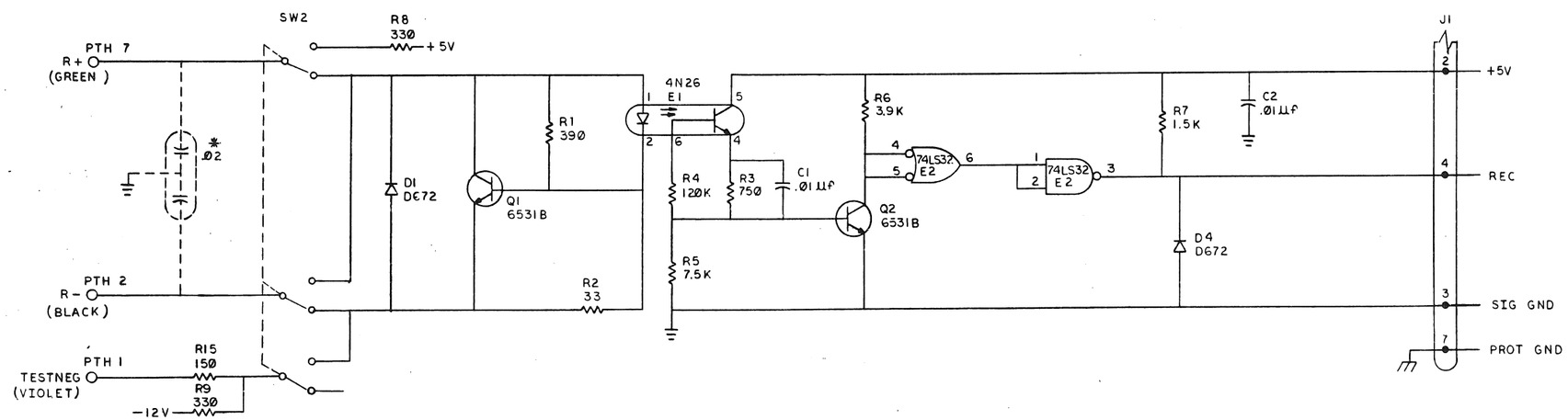

NOTE:
1. * OPTIONAL

DRN.		FIRST USED ON VT100	digital
CHK'D		TITLE 20 MA ADAPTOR	
ENG.	1-13-78		
PROJ. ENG.	5/12/78		
PROD.	6/13/78		
NEXT HIGHER ASSY. D-UA-5413206-0-0		SIZE D	CODE CS	NUMBER 5413206-0-1	REV. B
SCALE —			
SHEET 1 OF 1		DIST.	

REVISIONS | REV. | CHANGE NO. | CHK.

SIZE D CODE CS NUMBER 5413206-0-1 REV. B

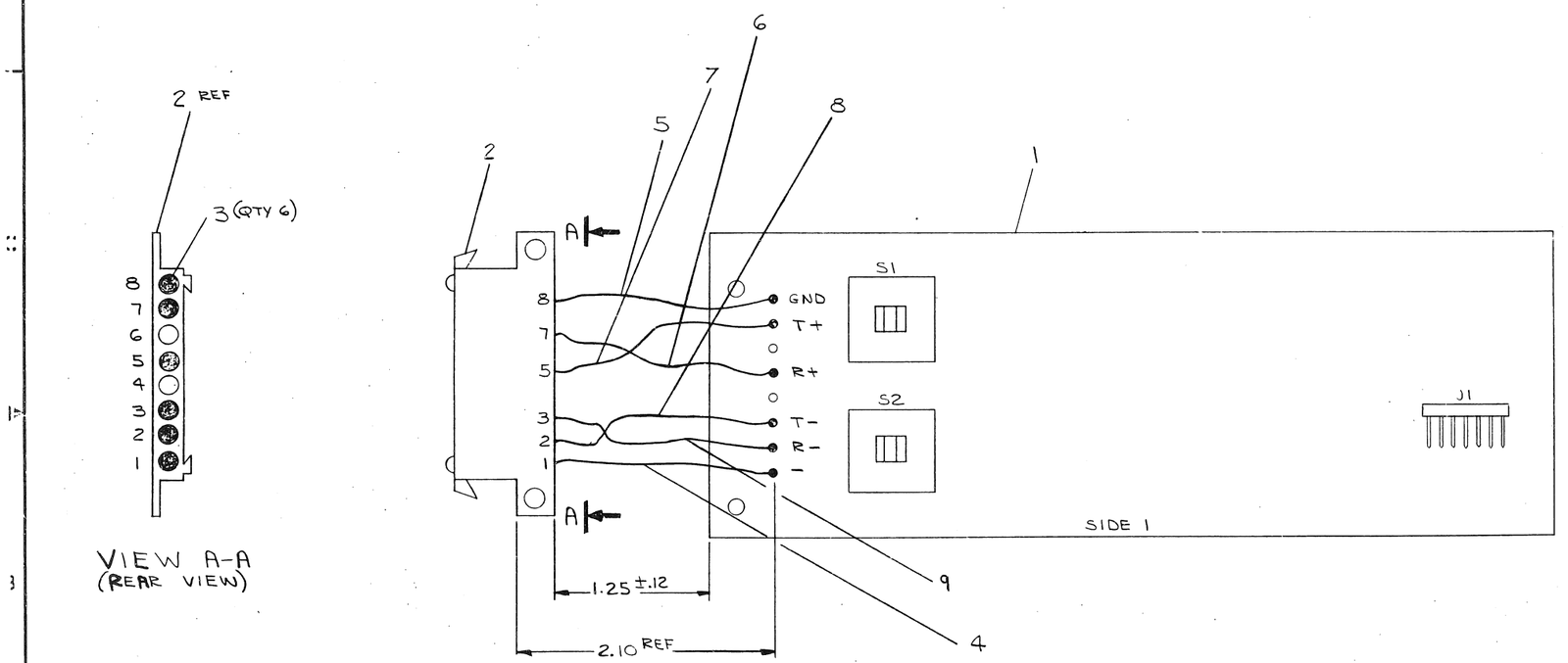

A/R	WIRE, #22 AWG, STRD (BLK)	9107350-00	9
A/R	WIRE, #22 AWG, STRD (RED)	9107350-22	8
A/R	WIRE, #22 AWG, STRD (GRN)	9107350-55	7
A/R	WIRE, #22 AWG, STRD (WHT)	9107350-99	6
A/R	WIRE, #22 AWG, STRD (YEL)	9107350-44	5
A/R	WIRE, #22 AWG, STRD (VIO)	9107350-77	4
6	CONTACT, ELECTRICAL, FEMALE	1209379-03	3
1	HOUSING, SOCKET (8 PIN)	1209340-00	2
1	20MA ADAPTER BOARD	D-UA-5413206-00	1
	DESCRIPTION	DWG./PART NO.	ITEM NO.

UNLESS OTHERWISE SPECIFIED DIMENSIONS ARE IN INCHES

ANGLES ±0° 30'	CLASS OF ACCURACY (CHECK ONE)	NOMINAL DIMENSION RANGE INCHES					
		OVER 0 TO 0.2	OVER 0.2 TO 1.2	OVER 1.2 TO 4.0	OVER 4.0 TO 12.0	OVER 12.0 TO 40.0	OVER 40.0 TO 80.0
SURFACE QUALITY IN MICROINCHES	MEDIUM ☐	±.004	±.008	±.012	±.016	±.024	±.04
	PREFERRED ☐	±.012	±.016	±.025	±.04	±.063	±0.1

QUANTITY & VARIATION

THIRD ANGLE PROJECTION

REMOVE BURRS AND BREAK SHARP CORNERS

DO NOT SCALE DWG

MATERIAL SEE PARTS LIST

FINISH

DRN. 8 NOV 77
CHK'D 22 NOV 77
ENG. 1-11-78
PROJ. ENG. 1-11-78
PROD. 11 JAN 78

FIRST USED ON VT100

digital

TITLE 20 MA ADAPTER ASSY

NEXT HIGHER ASSY. E-UA-VTIXX-AA-0

SCALE 3/1

SHEET 1 OF 1

SIZE D CODE IA NUMBER 7015273-0-0 REV.

DIST.

REVISIONS CHANGE NO. REV. CHK

WIRE TABLE

ITEM NUMBER	DESCRIPTION AWG	DESCRIPTION COLOR	FROM CONNECTION	FROM WITH	TO CONNECTION	TO WITH
1	24	BLK	J1-1	3	J2-1	3
			J1-2		J2-2	
			J1-3		J2-3	
			J1-4		J2-4	
			J1-6		J2-6	
	24	BLK	J1-7	3	J2-7	3

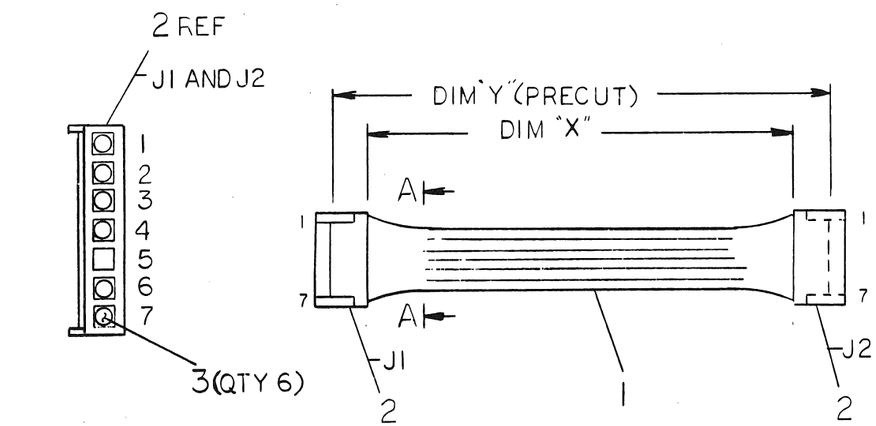

VIEW A-A
REAR VIEW
2 PLACES

LEGEND

NUMBER	DIM "X" VARIATION	DIM "Y" (PRECUT) REF
7015506-ØE	2.0 IN ±.25 IN.	2.75 IN.

12	CONTACT, PIN	1214979-00	3
2	HOUSING, 7 CONN	1215047-01	2
A/R	WIRE, #24AWG, STRD (BLK)	9107450-00	1
	DESCRIPTION	DWG./PART NO.	ITEM NO.

UNLESS OTHERWISE SPECIFIED DIMENSIONS ARE IN INCHES

ANGLES ±0° 30'	CLASS OF ACCURACY (CHECK ONE)	NOMINAL DIMENSION RANGE INCHES: OVER 0 TO 0.2	OVER 0.2 TO 1.2	OVER 1.2 TO 4.0	OVER 4.0 TO 12.0	OVER 12.0 TO 40.0	OVER 40.0 TO 80.0
SURFACE QUALITY IN MICROINCHES	MEDIUM ☐	±.004	±.008	±.012	±.016	±.024	±.04
	PREFERRED ☐	±.012	±.016	±.025	±.04	±.062	±0.1

QUANTITY & VARIATION

THIRD ANGLE PROJECTION

REMOVE BURRS AND BREAK SHARP CORNERS

DO NOT SCALE DWG

MATERIAL SEE PARTS LIST

FINISH —

DRN. 5-Jan-78
CHK'D 9-Jan-78
ENG. 1-23-78
PROJ. ENG. 1-23-78
PROD. 1-24-78

NEXT HIGHER ASSY. E-UA-VTXX-AA

SCALE NONE

SHEET 1 OF 1

FIRST USED ON VTIØØ

digital

TITLE
CABLE, INTERNAL
2ØMA ADAPTOR

SIZE	CODE	NUMBER	REV.
C	IA	7015506-0-0	

DIST.

REVISIONS	CHANGE NO.	REV.
CHK		

LEGEND

NUMBER	DIM "X" VARIATION	DIM "Y" (PRECUT) REF
BCØ5F-15	15 FT. ± 3 IN.	15 FT. .75 IN. ± 3 IN.
BCØ5F-9	9 FT. ± 3 IN	9 FT. .75 IN. ± 3 IN.

WIRE TABLE

ITEM NO	DESCRIPTION AWG	COLOR	FROM CONNECTION	TO CONNECTION
3	22	BLK	P1-2	P2-3
3	22	RED	P1-3	P2-2
3	22	WHT	P1-5	P2-7
3	22	GRN	P1-7	P2-5

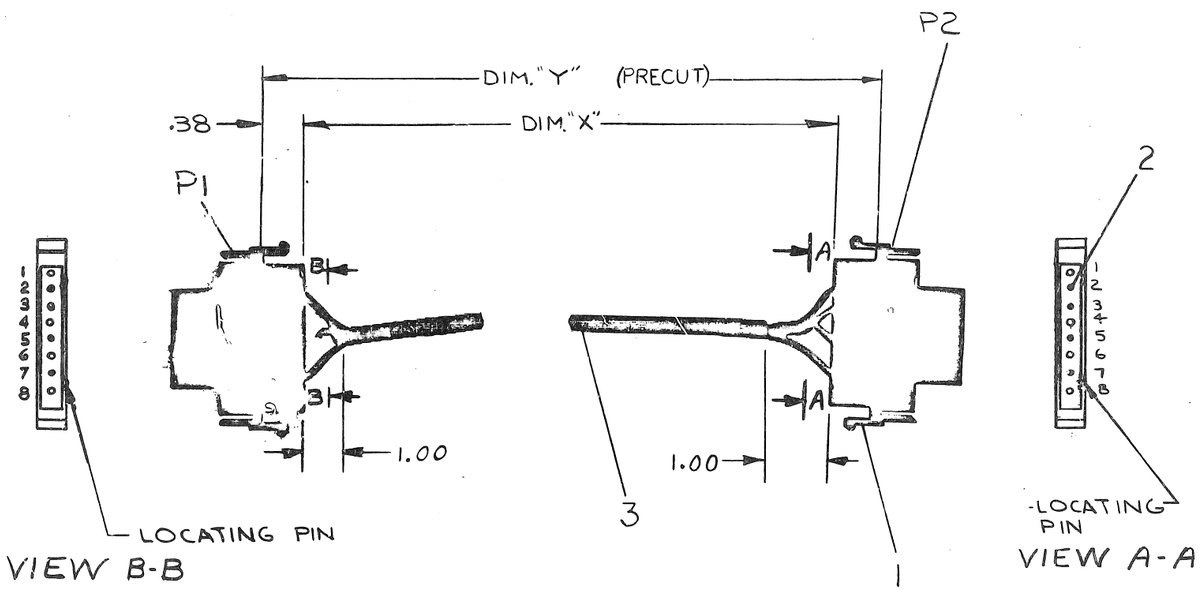

QTY.	DESCRIPTION	PART NO.	ITEM NO.
AR	CABLE 4 CONDUCTOR	9107706	3
8	SOCKET (MALE)	1209378-03	2
2	MATE-N-LOCK (MALE)	1209340-01	1

PARTS LIST

FIRST USED ON OPTION MODEL DF11

UNLESS OTHERWISE SPECIFIED
DIMENSION IN INCHES
TOLERANCES
DECIMALS ± .005 FRACTIONS ± 1/64 ANGLES ± 0°30'
FINAL SURFACE QUALITY
REMOVE BURRS AND BREAK SHARP CORNERS

MATERIAL

FINISH

		DATE
DRN.	J. Glendwr	10/6/70
CHK'D.	R. Milan	10/8/71
ENG.	Robert Fitch	10-19-71
PROJ. ENG.	Robert Fitch	10-19-71
PROD.	Paul Mazzeo	10-26-71

NEXT HIGHER ASS'Y

SCALE

SHEET 1 OF 1

digital EQUIPMENT CORPORATION
MAYNARD, MASSACHUSETTS

TITLE
CABLE INTERFACE
BCØ5F

SIZE	CODE	NUMBER	REV
C	UA	BCØ5F-Ø-Ø	C

DIST. G

REVISIONS

CHK	CHANGE NO.	REV.	
	BCØ5F-00001	A	11-8-71
R.FITCH			
	LA36-00119	B	11-9-71
			7-17-75
J. BITTO			
	BCØ5F-00002	C	7/18/75
R.FITCH			
			22 JUN 76

DEC FORM NO. DRC

COMPONENT SIDE VIEW

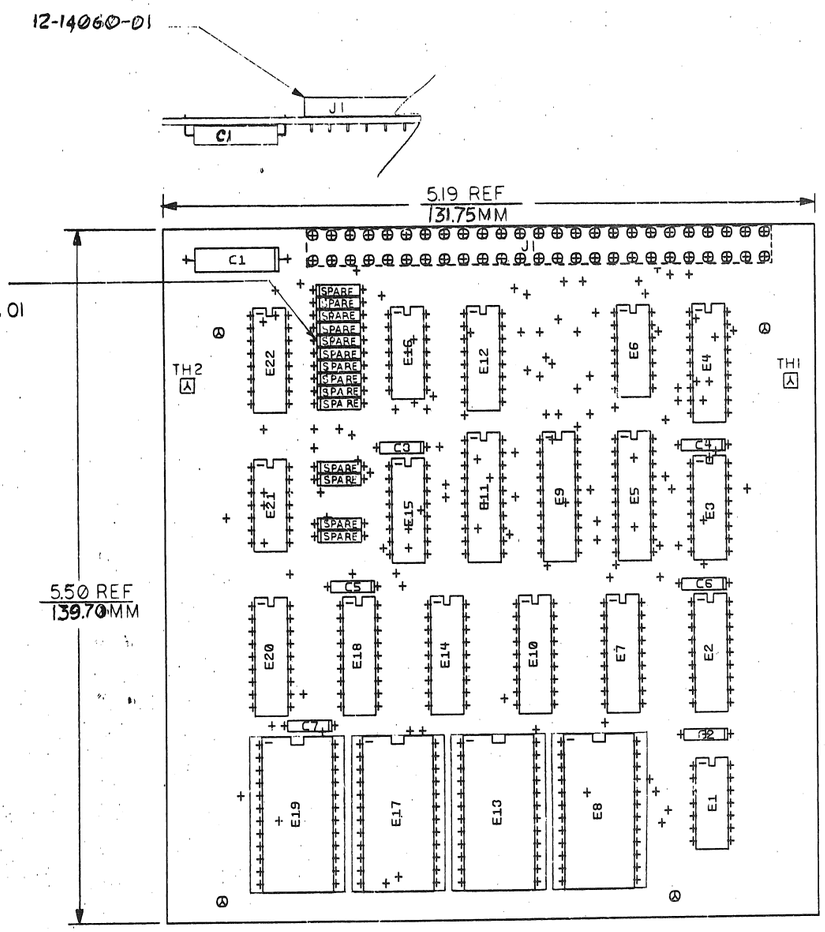

NOTES: J1 CONN MOUNTED ON SIDE 2 AFTER OTHER COMPS HAVE BEEN ASSEMBLED & BD HAS GONE THROUGH WAVE SOLDER

CHK	CHANGE NO	REV
	5413097-MLD001	B
		C

ETCH REV.	B
P.C. DESIGN DATA BASE REV.	BL

SIGNATURES	DATE
DRN.	1-17-78
CHK'D.	1-17-78
ENG.	5/12/78
PROJ. ENG.	5/12/78
PROD.	6/13/78
SCALE 2/1	
SHT. 1 OF 3	
NEXT HIGHER ASSY. B-DD-5413097-0	

digital

TITLE VT100 ADVANCED VIDEO

SIZE	CODE	NUMBER	REV
D	UA	5413097-0-01	C

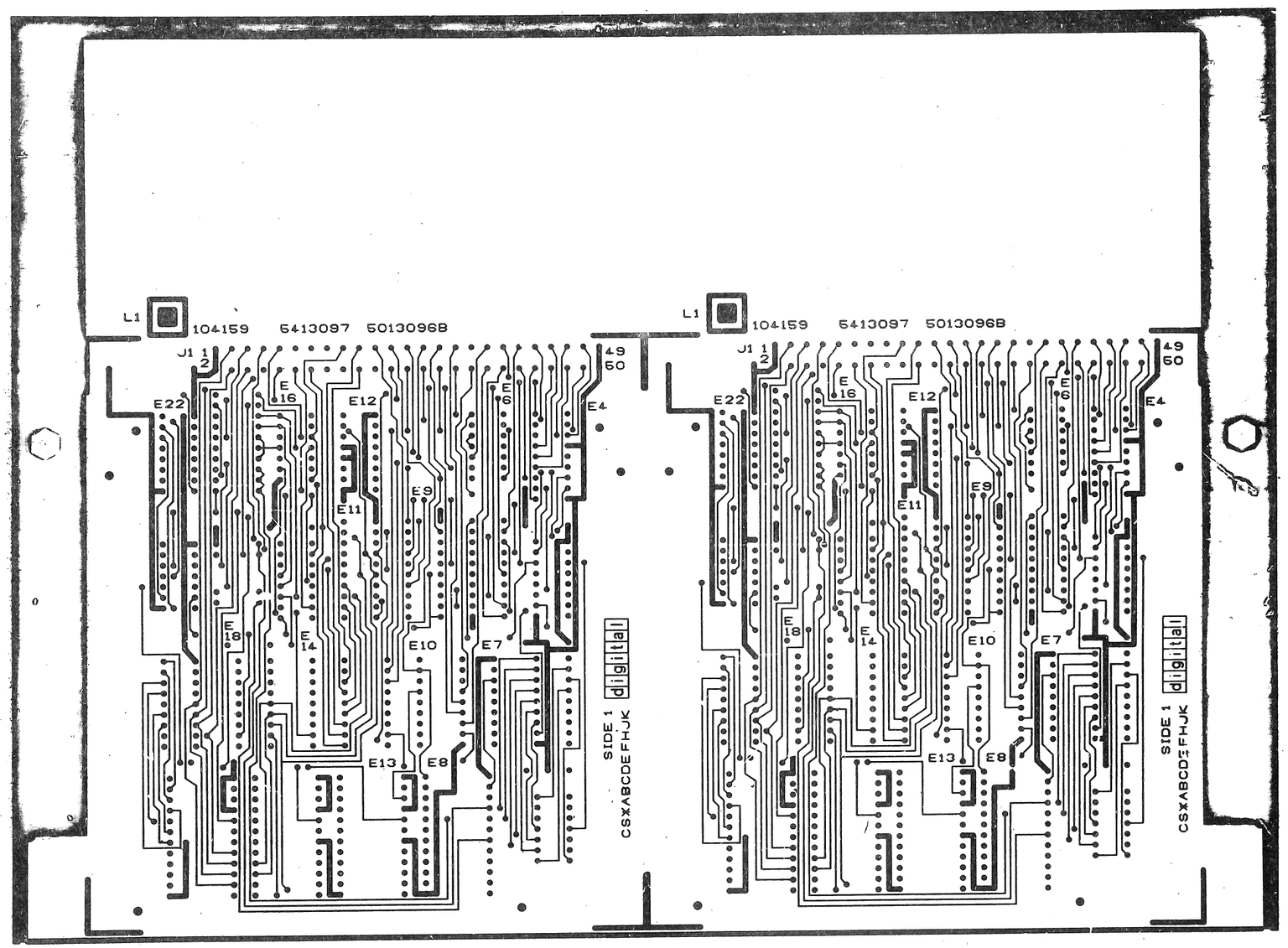

VIEWED FROM SIDE I

REVISIONS		
CHG	CHANGE NO	REV

TITLE	SIZE	CODE	NUMBER	REV
VT100 ADVANCED VIDEO	D	UA	5413097-0-0	C
SCALE 2:1 SHEET 2 OF 3	DIST			

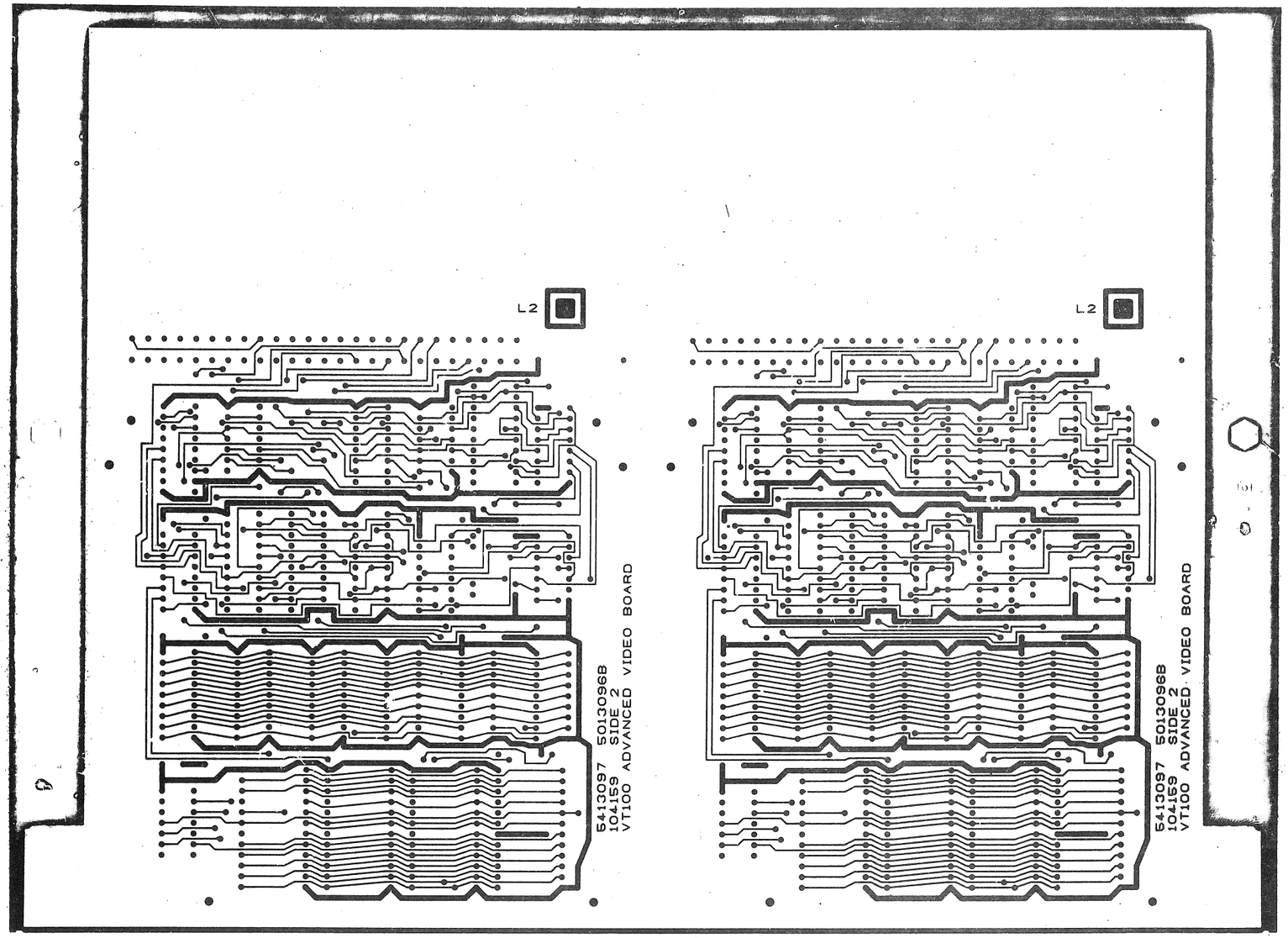

VIEWED FROM SIDE 2

REVISIONS		
CHK	CHANGE NO	REV

TITLE	SIZE	CODE	NUMBER	REV
VT100 ADVANCED VIDEO	D	UA	5413097-0-0	C
SCALE 2:1	SHEET 3 OF 3		DIST	

AUTOMATED BY PRTLST.1D(11)

P A R T S L I S T

LINE	ITEM	DOCUMENT NUMBER	PART NUMBER	DESCRIPTION	QTY	REFERENCE DESIGNATOR
1	1	D-MD-5013096-0-0	5013096-00	DRILL & ETCH DRAWING	1	
2	2		1005306-00	6.8MFD 35V 10% S.TANT	1	C1
3	3		1012784-00	.047 MFD 50V -20+80 CER	6	C2-C7
4	4		1210693-00	SOCKET 24PIN IC	4	XE8,XE13,XE17,XE19
5	5		1214060-01	HEADER.150 50POS	1	J1
6	6		1300005-03	R NETWORK 13-10K RESISTORS 5% DI	1	E1
7	7		1300005-07	R NETWORK 15-4.7K RESISTORS 5% 1	1	E15
8	8		1912801-00	LS02 NOR-GATE-QUAD 2IN	1	E6
9	9		1912803-00	LS04 INVERTER GATE-HEX 1I	1	E21
10	10		1912809-00	LS15 NAND GATE-TRIPLE 3IN	1	E16
11	11		1912842-00	LS138 DECODER-THREE INPUT,	1	E12
12	12		1912843-00	LS139 DECODER, 2 OF 4(DUAL	2	E3,E22
13	13		1912863-00	LS273 FF-D OCTAL W/CLEAR	1	E5
14	14		1914213-00	81LS97 BUFFER GATE-OCTAL 2I	2	E9,E11
15	15		2113106-01	1K MOS RAM 250NS	1	E4
16	16		2114212-00	P 2114-2 RAM,1024X4,STATIC	6	E2,E7,E10,E14,E18,E20
17	17		9009313-01	*** THIS ITEM IS NOT USED ***	-	
18	18		9009185-00	*** THIS ITEM IS NOT USED ***	-	
19	19		23069K2-00	*** THIS ITEM IS NOT USED ***	-	

REVISION HISTORY		
ENG	ECO NUMBER	REV
---	INIT	A
R.P	5413097-ML002	C

BASIC PART NO: 5413097

SECTION 1 OF 2

SECTION.VARIATION INDEX
[1] 00
[2] 01
[3]
[4]
[5]
[6]
[7]
[8]
[9]
[10]
[11]
[12]

DRN:	T. SHETRAWSKI	DATE: 10-MAR-78
CHK'D:	T. SHETRAWSKI	DATE: 10-MAR-78
DES.ENG:	D. PUCCI	DATE: 10-MAR-78
RESP.ENG.:	D. PUCCI	DATE: 10-MAR-78
MFG.ENG.:	T. CORCIARI	DATE: 10-MAR-78

ASSEMBLY NUMBER:
D-UA-5413097-0-0

D I G I T A L

TITLE PARTS LIST

VT100 ADV VIDEO WORD PROC

DOCUMENT NUMBER

SIZE	CODE	NUMBER	REV
K	PL	5413097-0-DBP	C

FILE NAME: 13097C.PLS

EDIT # 11

AUTOMATED BY PRTLST,1D(11)

P A R T S L I S T

LINE	ITEM	DOCUMENT NUMBER	PART NUMBER	DESCRIPTION	QTY	REFERENCE DESIGNATOR
1	1	D-MD-5013096-0-0	5013096-00	DRILL & ETCH DRAWING	1	
2	2		1005306-00	6.8MFD 35V 10% S.TANT	1	C1
3	3		1012784-00	.047 MFD 50V -20+80 CER	6	C2-C7
4	4		1210693-00	SOCKET 24PIN IC	4	XE8,XE13,XE17,XE19
5	5		1214060-01	HEADER.150 50POS	1	J1
6	6		1300005-03	R NETWORK 13-10K RESISTORS 5% DI	1	E1
7	7		1300005-07	R NETWORK 15-4.7K RESISTORS 5% 1	1	E15
8	8		1912801-00	LS02 NOR-GATE-QUAD 2IN	1	E6
9	9		1912803-00	LS04 INVERTER GATE-HEX 1I	1	E21
10	10		1912809-00	LS15 NAND GATE-TRIPLE 3IN	1	E16
11	11		1912842-00	LS138 DECODER-THREE INPUT,	1	E12
12	12		1912843-00	LS139 DECODER, 2 OF 4(DUAL	2	E3,E22
13	13		1912863-00	LS273 FF-D OCTAL W/CLEAR	1	E5
14	14		1914213-00	81LS97 BUFFER GATE-OCTAL 2I	2	E9,E11
15	15		2113106-01	1K MOS RAM 250NS	1	E4
16	16		2114212-00	P 2114-2 RAM,1024X4,STATIC	6	E2,E7,E10,E14,E18,E20
17	17		9009313-01	*** THIS ITEM IS NOT USED ***	-	
18	18		9009185-00	JUMPER, WIRE, INSULATED, BLACK B	2	W1,W7
19	19		23069E2-00	E2-04	1	E19

REVISION HISTORY			BASIC PART NO: 5413097	DRN: T. SHETRAWSKI	DATE: 10-MAR-78	D I G I T A L
ENG	ECO NUMBER	REV	SECTION 2 OF 2			TITLE PARTS LIST
---	INIT	A	SECTION.VARIATION INDEX	CHK'D: T. SHETRAWSKI	DATE: 10-MAR-78	VT100 ADV VIDEO WORD PROC
R.P	5413097-ML002	C	[1] 00			
			[2] 01	DES.ENG: D. PUCCI	DATE: 10-MAR-78	
			[3]			DOCUMENT NUMBER
			[4]	RESP.ENG.: D. PUCCI	DATE: 10-MAR-78	
			[5]			SIZE / CODE / NUMBER / REV
			[6]			
			[7]	MFG.ENG.: T. CORCIARI	DATE: 10-MAR-78	K / PL / 5413097-0-DBP / C
			[8]			
			[9]			
			[10]	ASSEMBLY NUMBER:		FILE NAME: 13097C.PLS / EDIT # 12
			[11]	D-UA-5413097-0-0		
			[12]			

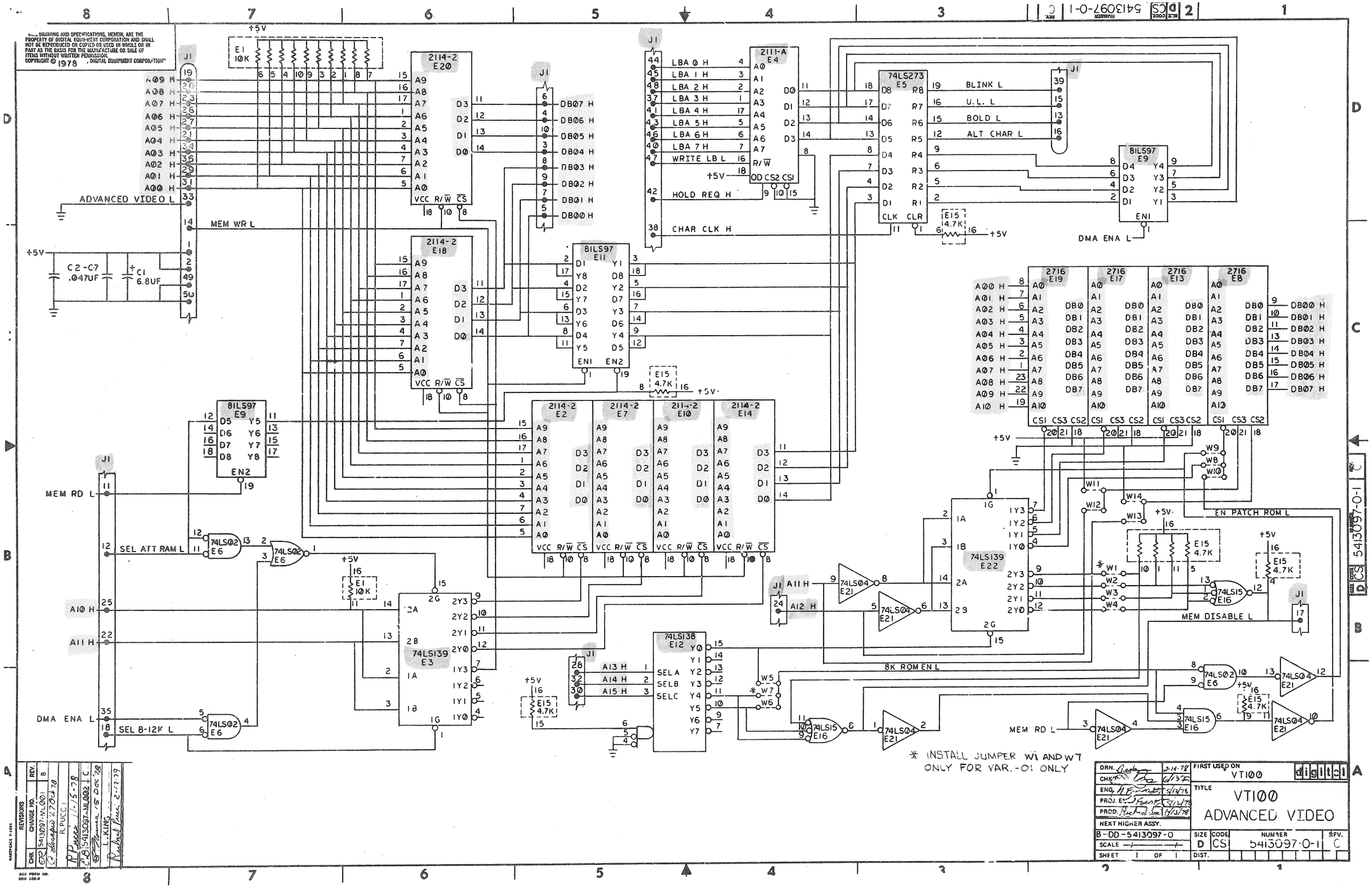
THIS DRAWING AND SPECIFICATIONS, HEREIN, ARE THE PROPERTY OF DIGITAL EQUIPMENT CORPORATION AND SHALL NOT BE REPRODUCED OR COPIED OR USED IN WHOLE OR IN PART AS THE BASIS FOR THE MANUFACTURE OR SALE OF ITEMS WITHOUT WRITTEN PERMISSION. COPYRIGHT © 1978 DIGITAL EQUIPMENT CORPORATION
J1
A09 H
A08 H
A07 H
A06 H
A05 H
A04 H
A03 H
A02 H
A01 H
A00 H
ADVANCED VIDEO L
MEM WR L
+5V
C2-C7 .047UF
C1 6.8UF
E1 10K
2114-2 E20
2114-2 E18
DB07 H
DB06 H
DB05 H
DB04 H
DB03 H
DB02 H
DB01 H
DB00 H
LBA 0 H
LBA 1 H
LBA 2 H
LBA 3 H
LBA 4 H
LBA 5 H
LBA 6 H
LBA 7 H
WRITE LB L
HOLD REQ H
CHAR CLK H
2111-A E4
74LS273 E5
BLINK L
U.L. L
BOLD L
ALT CHAR L
8ILS97 E9
DMA ENA L
E15 4.7K
8ILS97 E11
2716 E19
2716 E17
2716 E13
2716 E8
2114-2 E2
2114-2 E7
2114-2 E10
2114-2 E14
MEM RD L
SEL ATT RAM L
SEL 8-12K L
74LS02 E6
74LS139 E3
A10 H
A11 H
A12 H
A13 H
A14 H
A15 H
74LS138 E12
74LS139 E22
74LS04 E21
74LS15 E16
EN PATCH ROM L
MEM DISABLE L
8K ROM EN L
W1
W2
W3
W4
W5
W6
W7
W8
W9
W10
W11
W12
W13
W14
* INSTALL JUMPER W1 AND W7 ONLY FOR VAR.-01 ONLY
DRN.
CHK.
ENG.
PROJ. ENG.
PROD.
NEXT HIGHER ASSY.
B-DD-5413097-0
SCALE
SHEET 1 OF 1
FIRST USED ON VT100
digital
TITLE
VT100
ADVANCED VIDEO
SIZE D
CODE CS
NUMBER 5413097-0-1
REV. C
REVISIONS
CHANGE NO. 5413097-ML001 REV. B
5413097-ML002 C
DEC FORM NO. DDD 108-0

DIGITAL EQUIPMENT CORPORATION
PARTS LIST

MADE BY D. HEALY DATE 14 JUN 78	CHECKED D. HEALY DATE 14 JUN 78	SECTION 1
ENG E. Heidebing DATE 10 JULY 78	PROD [illegible] DATE 10 Jul 78	ISSUED SECTION 1

ITEM NO.	DRAWING NO.	PART NO.	DESCRIPTION	QUANTITY / VARIATION VT1ØØ-AA	VT1ØØ-AB	VT1ØØ-NA	VT1ØØ-NB									NOTES: REF DESIGNATION
1	EK-VT1ØØ-UG-001	EK-VT1ØØ-UG	GUIDE, USERS VT1ØØ	1	1	1	1									
2		3615741	LABEL, SET-UP, VT1ØØ	1	1	1	1									
3		VT1ØØ-AA	TERM., VIDEO, W/115V PLUG	1	-	-	-									
4		VT1ØØ-AB	TERM., VIDEO, W/23ØV PLUG	-	1	-	-									
5		VT1ØØ-NA	TERM., VIDEO, DECFORM,W/115V PLUG	-	-	1	-									
6		VT1ØØ-NB	TERM., VIDEO, DECFORM,W/23ØV PLUG	-	-	-	1									

E.C.O. NO.

TITLE	ASSY NO.	SIZE	CODE	NUMBER	REV.
SHIPPING LIST VT1ØØ	—//—	B	PL	VT1ØØ-Ø	
	SHEET 1 OF 1	INSERTION PARTS LIST DATA BASE REV			

DRB 125

FIELD MAINTENANCE PRINT SET

TABLE OF CONTENTS

UNIT VARIATIONS COVERED BY THIS PRINT SET
VT1XX-AC
VT1XX-BC

VTIXX-AC

Field Maintenance Print Set

Digital Equipment Corporation

PRINT SET ORDER NO.
MP-ØØ9Ø1-ØØ

REVISIONS		
REV.	A	
CHG. NO.	INITIAL.	
DATE		

USED ON OPTION/MODEL	
VT1ØØ	
SHEET I OF 1	

DRN. D. HEALY	DATE 16JAN 80	TITLE: VT1ØØ SERIAL PRINTER INTERFACE
CHK'D D. HEALY	DATE 14MAY 80	digital
PROJ. ENG.	DATE 5MAR 80	
FIELD SERV.	DATE 14MAY 80	

SIZE	CODE	NUMBER	REV.
B	TC	VT1XX-AC-1	A

DIST.

EN-01124-16-N675 (327)

DRB 124

AUTOMATED BY PRTLST.3L(40)

P A R T S L I S T

LINE	ITEM	DOCUMENT NUMBER	PART NUMBER	DESCRIPTION	QUANTITY PER VARIATION AC
1	1	D-IA-7017383-0-0	7017383-00	WORT BOX ASSY.	1
2	2	D-UA-5414260-0-0	5414260-00	STP FOUNDATION MODULE	1
3	3		9009306-00	SPACER, FIBRE, RND, 4-40, .250 X	1
4	4		9008301-01	SCREW,PAN,PHIL 4-40X 1/4 SS	2
5	5		23095E2-00	E2-02	1
6	6		23096E2-00	E2-02	1
7	7		23139E2-00	E2-02	1
8	8		23140E2-00	E2-02	1
9	9		23186E2-00	E2-02	1
10	10		23187E2-00	E2-02	1
11	11		9009185-00	JUMPER, WIRE, INSULATED, BLACK B	4
12	12		1214333-U0	KEYCAP,KEYBD ARRAY,SKULPT,(PRINT	1
13	13		3617254-00	LABEL,SET-UP FOR VT1XX-AC	1
14	14		3617253-02	LABEL,OPTIONS FOR VT1XX-AC	1
15	15		3617253-01	LABEL,OPTIONS FOR VT1XX-AB	1
16	16		EKVT1AC-UG	VT1XX-AC USER GUIDE	1
17	17	A-SP-3700538-0-0	3700538-00	PKG KIT OPTION VT1XX-AA	1

REVISION HISTORY			BASIC PART NO: VT1XX										
ENG	ECO NUMBER	REV	SECTION A OF A	DRN: R. ROUBICHAD	DATE: 06-FEB-80		D	I	G	I	T	A	L
---	INITIAL	A	SECTION. VARIATION INDEX	CHK'D: DENIS HEALY	DATE: 14-MAY-80	TITLE	PARTS LIST						
MM	VT1XX-AC-ML001	B	[A] AC			VT100 SERIAL PRINTER INTERFACE							
			[B]	DES.ENG.: MICHAEL MICHAUD	DATE: 14-MAY-80								
			[C]	RESP.ENG.: MICHAEL MICHAUD	DATE: 28-MAY-80	DOCUMENT NUMBER							
			[D]			SIZE	CODE	NUMBER				REV	
			[E]	MFG.ENG.: JOHN HUTCHINS	DATE: 14-MAY-80	K	PL	VT1XX-AC-DBP				B	
			[F]	ASSEMBLY NUMBER: #B-DD-VT1XX-AC	TOP DOCUMENT NUMBER:			FILE NAME: Z1236B.PLS				EDIT # 11	

AUTOMATED BY PRTLST.3M(41)

P A R T S L I S T

LINE	ITEM	DOCUMENT NUMBER	PART NUMBER	DESCRIPTION	QUANTITY PER VARIATION BC
1	1	K-PL-VT1XX-AC-0	VT1XX-AC	EIA SERIAL INTERFACE FROM VT100	5
2	2	A-SP-3700538-0-0	3700538-01	PKG KIT OPTION VT1XX-AB	1

REVISION HISTORY			BASIC PART NO: VT1XX			
ENG.	ECO NUMBER	REV	SECTION A OF A	DRN: R. ROUBICHAD	DATE: 26-MAR-80	
---	INITIAL	A	SECTION. VARIATION INDEX [A] BC	CHK'D: D. HEALY	DATE: 14-MAY-80	TITLE PARTS LIST VT100 SERIAL PRINTER INTERFACE
			[B]	DES.ENG.: MICHEAL MICHAUD	DATE: 14-MAY-80	
			[C]	RESP.ENG.: MICHEAL MICHAUD	DATE: 28-MAY-80	DOCUMENT NUMBER
			[D]	MFG.ENG.: JOHN HUTCHINS	DATE: 14-MAY-80	SIZE: K; CODE: PL; NUMBER: VT1XX-BC-DBP; REV: A
			[E]	ASSEMBLY NUMBER: #B-DD-VT1XX-AC	TOP DOCUMENT NUMBER:	FILE NAME: Z1395A.PLS; EDIT #: 5
			[F]			

D I G I T A L

DRAWING DIRECTORY

UNIT VARIATIONS

VAR	TITLE
VT1XX-AC	VT1ØØ SERIAL PRINTER INTERFACE
VT1XX-BC	KIT OF 5 VT1XX-AC

REVISIONS		
CHK	CHANGE NO.	REV.
	INITIALIZE	A

USED ON OPTION/MODEL: VT100

SHEET 1 OF 3

DRN. R. ROBICHAUD	DATE 16JAN 80	TITLE VT1ØØ SERIAL PRINTER INTERFACE	digital
CHK'D. D. HEALY	DATE 14MAY 80		
PROJ. ENG. M. D. Medeiros	DATE 28 MAY 80	SIZE B	CODE DD
PROD. R. Dilfant	DATE 20 MAY 80	NUMBER VT1XX-AC	REV A
		DIST.	

DRB 106A

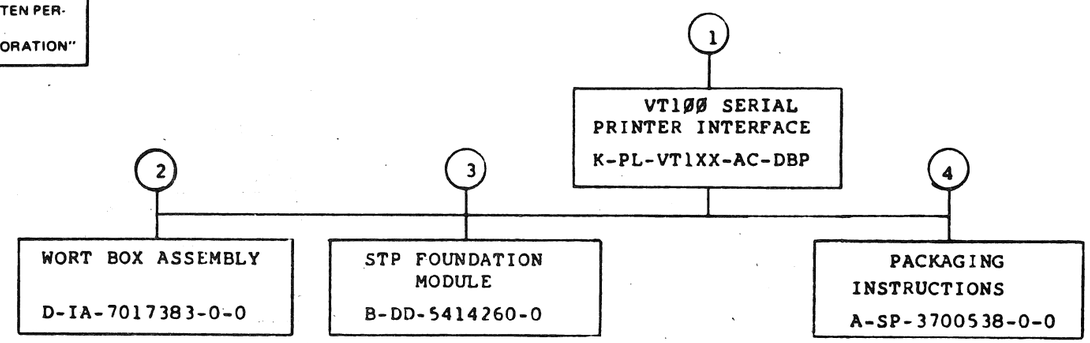

* FOR KIT OF 5 USE K-PL-VT1XX-BC-DBP

TITLE			SIZE	CODE	NUMBER	REV
	VT1ØØ SERIAL PRINTER INTERFACE	SHEET 2 OF 3	B	DD	VT1XX-AC	A

DRB 107

FIND NO.	DRAWING NO.	DESCRIPTION	TYPE
1	MPØØ901-00	VT1ØØ SERIAL PRINTER INTERFACE	-
	B-TC-VT1XX-AC-1	VT1ØØ SERIAL PRINTER INTERFACE	-
	K-PL-VT1XX-AC-DBP	VT1ØØ SERIAL PRINTER INTERFACE (PL) (SINGLE PACK)	E/M
	A-SP-3617254-0-0	LABEL, SET-UP FOR VT1XX-AC	M
	A-SP-3617253-0-0	LABEL, OPTIONS FOR VT1XX-AC/AB	M
	EKVTIAC-UG	USERS GUIDE, VT1XX-AC	REF
	K-PL-VT1XX-BC-DBP	VT100 SERIAL PRINTER INTERFACE (PL) KIT OF 5	E/M
2	D-IA-7017383-0-0	WORT BOX ASSEMBLY	M
	D-MD-7423698-0-0	BOX WORT (REWORK)	M
	A-PS-3617252-0-0	LABEL	M
3	B-DD-5414260-0	STP FOUNDATION MODULE	E/M
4	A-SP-3700538-0-0	PACKAGING INSTRUCTIONS	M

TYPE: E ELECTRICAL
M MECHANICAL
E/M ELECTRO/MECHANICAL

digital

TITLE VT1ØØ SERIAL PRINTER INTERFACE

SHEET 3 OF 3

SIZE B | CODE DD | NUMBER VT1XX-AC | REV A

DRB 108A

SIZE	CODE	NUMBER	REV.
B	DD	5414260-0	F

DRAWING NO.	NO. OF SHTS.	PART NO.	DESCRIPTION	REVISIONS				
		5414260-00	STP FOUNDATION MODULE	A	A	A	A	A
D-UA-5414260-0-0	1		STP FOUNDATION MODULE	A	B	C	D	E
D-CS-5414260-0-1	2		STP FOUNDATION MODULE	A	B	D	E	F
K-PL-5414260-0-DBP			STP FOUNDATION MODULE	A	B	D	E	F
K-PC-5414260-0-DBC			P.C. DESIGN DATA BASE	B	B	B	B	B
		5014259-00	P.C. BOARD	B	B	B	B	B
D-MD-5014259-0-0	4		DRILL & ETCH DRAWING	A	A	A	A	A
D-EC-5014259-0-0	2		ETCH CUT DRAWINGS	A	A	A	A	A
A-SP-3700554-0-0		3700554-00	PKG MODULE 5413097	-	-	-	-	-
A-SP-3700438-0-0		3700438-05	PKG BULK CARTON 9906476-29	-	-	-	-	-

NOTES:

REVISIONS		
REV.	CHG NO.	DATE
B	ML001	7-11-80
C	ML002	1-81
D	ML003	3-19-81
E	ML004	5-81
F	ML005	5-82

digital

USED ON OPTION/MODEL
VT1XX-AC

DRN	T. Shetrawski	10/24/79
CHK'D	[illegible]	10/24/79
ENG	[illegible]	3/19/80
PROD	L S Atwood	2/19/82

TITLE: STP FOUNDATION MODULE

SIZE	CODE	NUMBER	REV.
B	DD	5414260-0	F

SHEET 1 OF 1

DRB 126

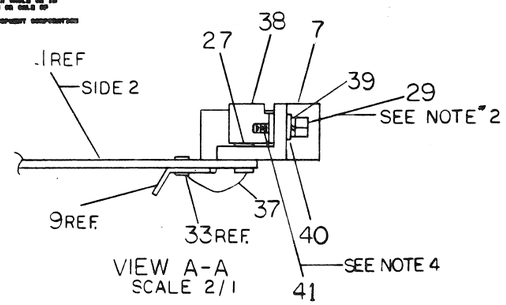

VIEW A-A
SCALE 2/1

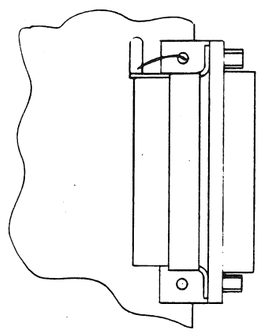

COMPONENT SIDE VIEW

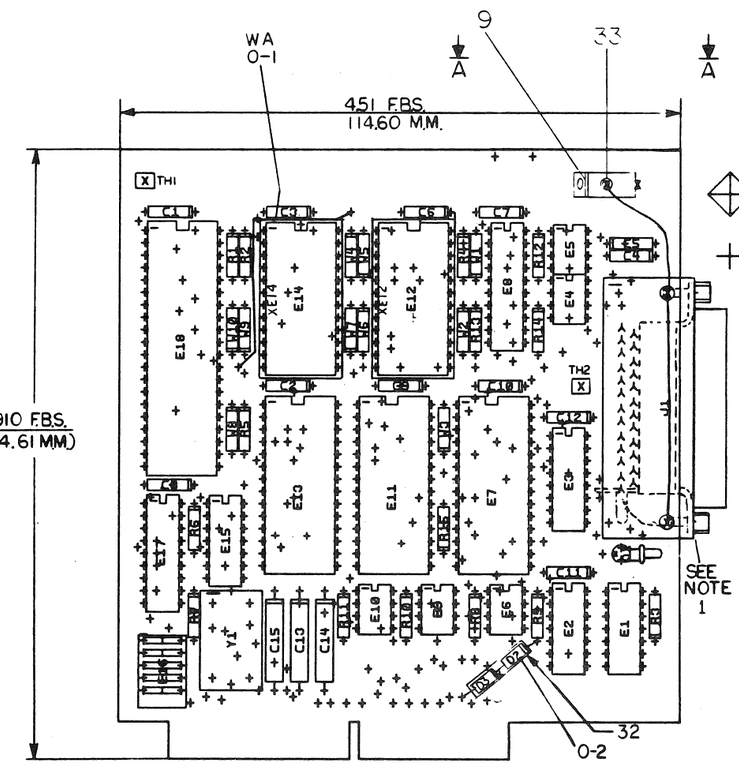

MODULE REWORK AT RELEASE
DO NOT INSTALL W1, W2, W3, W5, W7, & W8, W10
WIRE ADDS-SIDE 1
0-1 CONNECT WIRE BETWEEN FEEDTHRU ABOVE W4 TO FEEDTHRU BETWEEN W9 & W10.
COMPONENT ADDS-SIDE 1
0-2 CONNECT CATHODE END OF D2 TO R9 & ANODE END TO CATHODE END OF D3 & ANODE END OF D3 TO FEEDTHRU JOINING A3-2. ADD SLEEVING TO COVER D2 & D3 (ITEM #32) AS REQUIRED.

NOTE 2. FOR INDIVDUAL FIELD SERVICE/ CUSTOMER SPARES SHIPMENTS, USE PACKAGING INSTRUCTION A-SP-3700554-0-0 FOR BULK INTERPLANT SHIPMENTS USE PACKAGING INSTRUCTION A-SP-3700438-0-0 VARIATION -05.

3. THE GROUNDING TAB ON EIA GROUNDING BRACKET (7424901-00) MUST BE BENT OUT STRAIGHT BEFOR THE BRACKET IS INSTALLED SEE VIEW A-A

4 BEFORE SCREW IS TORQUED DOWN, APPLY A DROP OF ADHESIVE ITEM #41 TO SCREW THREADS. TORQUE DOWN IMMEDIATELY, AFTER HARDWARE IS TIGHTENED DOWN, APPLY A DROP OF ADHESIVE TO BACK END PORTION OF SCREW.

NOTES:
1- J1. MOUNTED ON SIDE 2

STEP & REPEAT	↕ Y AXIS ____ STEP ____ TIMES	
	↔ X AXIS ____ STEP ____ TIMES	

CHG NO	REV				
REF 5414260M1001	B	R PUCCI			
5414260M1005	C				
5414260M1006	D	R PUCCI			
5414260M1008		N WANIO			
5414260M1005	E		B. HARVEY		

ETCH REV. B

SIGNATURES	DATE
DRN.	
CHK'D.	
MECH. ENG.	3/3/80
PROJ. ENG.	3/3/80
PROD.	2/19/80
SCALE 2/1	
SHT. 1 OF 1	
NEXT HIGHER ASSY. B-DD-5414260-0	

digital

TITLE STP FOUNDATION MODULE

SIZE	CODE	NUMBER	REV
D	UA	5414260-0-0	E

MS# 275005

P A R T S L I S T

LINE	ITEM	DOCUMENT NUMBER	PART NUMBER	DESCRIPTION	QTY PER VARIATION 00	99	REFERENCE DESIGNATOR
1	1		5014259-00	DRILL AND DTCH BOARD	1	1	
2	2		1005306-00	6.8MFD 35V 10% S.TANT	3	3	C13-C15
3	3		1012784-00	.047 MFD 50V +80-20% CER	12	12	C1-C12
4	4		1100114-00	D 664 QS\75PCB PIV= 25V SP	2	2	D2,D3
5	5		1110324-00	LED 1MCD@10MA PIV=3	1	1	D1
6	6		1211164-01	SW,DIP 5POS/1PST 5VDC100MA F	1	1	E16
7	7		1214460-00	CONN,D SUB 25PIN ASSY RT ANGLE P	1	1	J1
8	8		1215006-06	SKT,IC 24PIN DIP TIN SOLD	2	2	XE14,XE12
9	9		7423699-00	LUG, GROUND	1	1	
10	10		1300488-00	12.0 K .25 W 5.0 % CC	8	8	R1,R2,R4,R8,R9,R11,R12,R14
11	11		1301425-00	300.0 .25 W 5.0 % CC	1	1	R3
12	12		1301775-00	820.0 .25 W 5.0 % CC	1	1	R15
13	13		1300316-00	470.0 .25 W 5.0 % CC	1	1	R7
14	14		1304839-00	51.0 K .25 W 5.0 % CC	4	4	R5,R6,R10,R13
15	15		1811660-28	OSCILLATOR, XTAL 5.9998 MHZ	1	1	Y1
16	16		1910534-00	74S04 INVERTER GATE-HEX 1I	1	1	E15
17	17		1912816-00	LS32 OR GATE-QUAD 2IN,POS	1	1	E2
18	18		1912821-00	LS54 A-O-I GATE,3-2-2-3IN	1	1	E1
19	19		1912846-00	LS155 DECODER,2 OF 4(DUAL)	1	1	E3
20	20		1915219-00	LS373 FF-D OCTAL-TRANSPARE	1	1	E8
21	21		1915415-00	9636 DRIVER,DUAL,EIA RS-	2	2	E4,E9
22	22		1915416-00	9637 RECEIVER,DUAL,RS-42	3	3	E5,E6,E10
23	23		2112623-03	DUAL BAUD RATE GEN/PROG DIVIDER	1	1	E17
24	24		2113107-01	P 8251A PUSART COMM. INTERFA	3	3	E7,E11,E13
25	25		2114963-00	UP,8-BIT NMOS	1	1	E18
26	26		2117184-01	4118-4RAM,8KX1,STATIC,250N	1	1	E12
27	27		9006732-00	EYELET,ROLLED 0.1210DX0.219	2	2	
28	28		23029E4-00	E4-01,E4-02	1	-	E14
29	29		9008451-01	SCREW LOCK,STANDOFF ONLY	2	2	
30	30		9009185-00	JUMPER, WIRE, INSULATED, BLACK B	3	3	W4,W6,W9

REVISION HISTORY			BASIC PART NO: 5414260			
ENG	ECO NUMBER	REV	SECTION A OF A	DRN: J. ARMSTRONG	DATE: 26-DEC-79	D I G I T A L
	INITIAL	A	SECTION.VARIATION INDEX	CHK'D: T. SHETRAWSKI	DATE: 26-DEC-79	TITLE PARTS LIST
MM	5414260-ML002	C	[A] 00,99			STP FOUNDATION MODULE
GB	5414260-ML003	D	[B]			
NW	5414260-ML004	E	[C]	DES.ENG: MIKE MICHAUD	DATE: 25-FEB-80	
BH	5414260-ML005	F	[D]			DOCUMENT NUMBER
			[E]			
			[F]	RESP.ENG.: MIKE MICHAUD	DATE: 25-FEB-80	
			[H]			SIZE / CODE / NUMBER / REV
			[J]			
			[K]	MFG.ENG.: AL JOHNS	DATE: 25-FEB-80	K / PL / 5414260-0-DBF / F
			[L]			
			[M]	ASSEMBLY NUMBER:	TOP DOCUMENT NUMBER:	FILE NAME: / EDIT #
			[N]	D-UA-5414260-0-0		Z0851F.PLS / 17

LINE	ITEM	DOCUMENT NUMBER	PART NUMBER	DESCRIPTION	QTY PER VARIATION 00	99	REFERENCE DESIGNATOR
31	31		9105740-55	WIRE(WRAP) 30AWG KYNAR UL142	A/R	A/R	
32	32		9107301-11	TUBING,THIN WALL,.085ID UL	A/R	A/R	
33	33		9009000-00	EYELET,ROLLED 0.1210DX0.156	1	1	
34	34	A-PS-3700554-0-0	3700554-00	PKG MODULE 5413097	REF	REF	
35	35	A-PS-3700438-0-0	3700438-05	PKG. BULK CARTON 9906476-29	REF	REF	
36	36		9006655-00	*** THIS ITEM IS NOT USED ***	-	-	
37	37		9107836-55	WIRE, 16AWG(26/30)IPVC 300V1	A/R	A/R	
38	38		7424901-00	BRACKET,GROUNDING,EIA CONNECTOR	1	1	
39	39		9006688-00	WASHER,HELICAL SPLIT SST	2	2	
40	40		9008172-00	WASHER,FLAT SST	2	2	
41	41		4901157-00	ADHESIVE,ACRYLIC RESIN,ETHYL CYA	A/R	A/R	

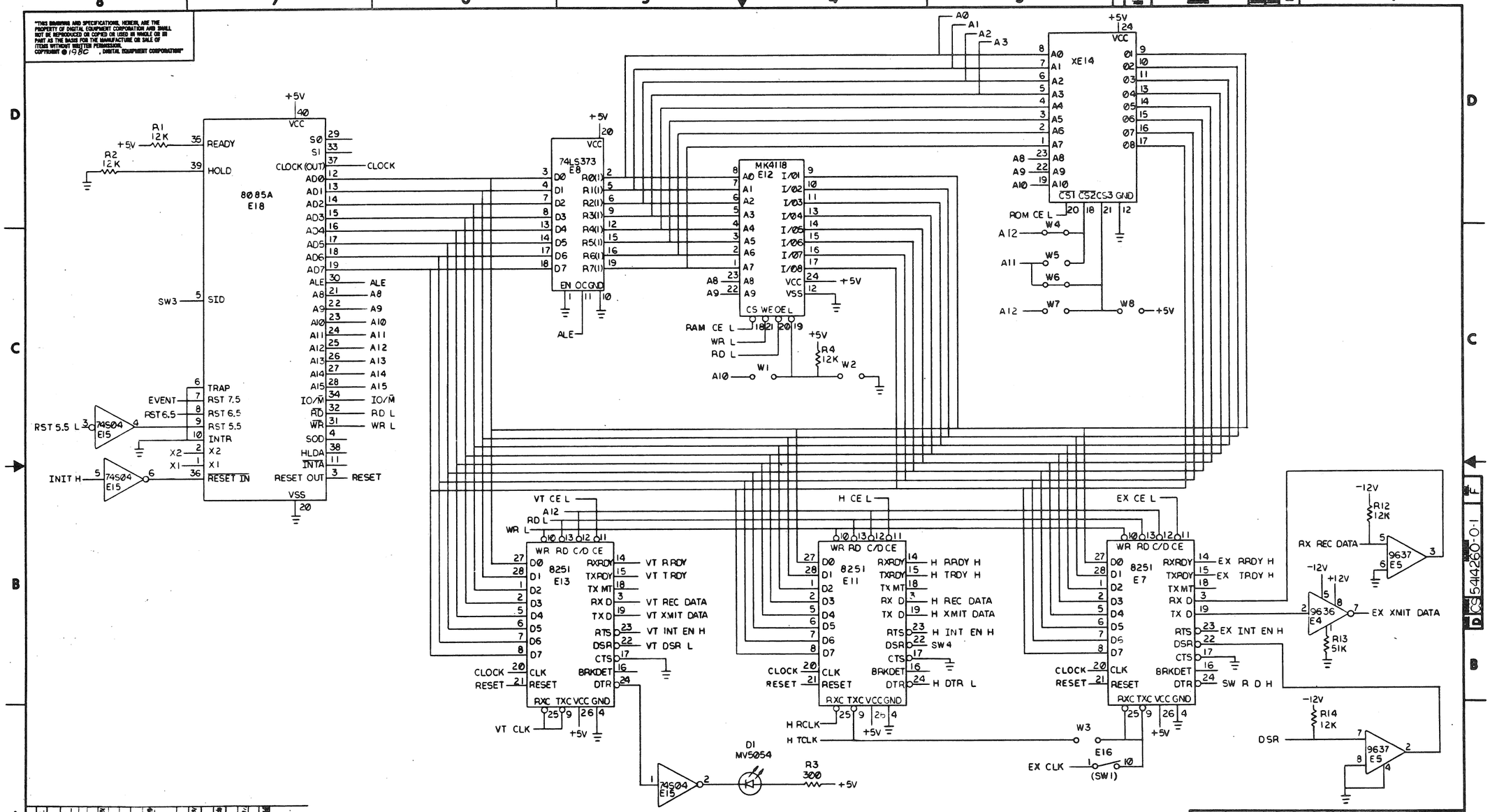

REVISIONS				
CHK	CHANGE NO.	REV.		
	5414260 ML0001	B		
	R PUCCI			
	5414260-ML0002	C	1-6-81	
	R PUCCI			
	5414260-ML0003	D	5-20-81	
	R PUCCI			
	5414260-ML0004	E	4-13-84	
	N WAINIO			
	5414260-ML0005	F	5-7-86	
	B HARVEY			

DRN.		3 Sept 79
CHK'D		7-16-79
ENG.		3/13/79
PROJ. ENG.		3/13/79
PROD.		3/13/79
NEXT HIGHER ASSY.	B-OD-5414260-0	
SCALE	—	
SHEET	1 OF 2	

FIRST USED ON: VTIXX-AC

TITLE: STP FOUNDATION MODULE

SIZE	CODE	NUMBER	REV.
D	CS	5414260-0-1	F

DIST.

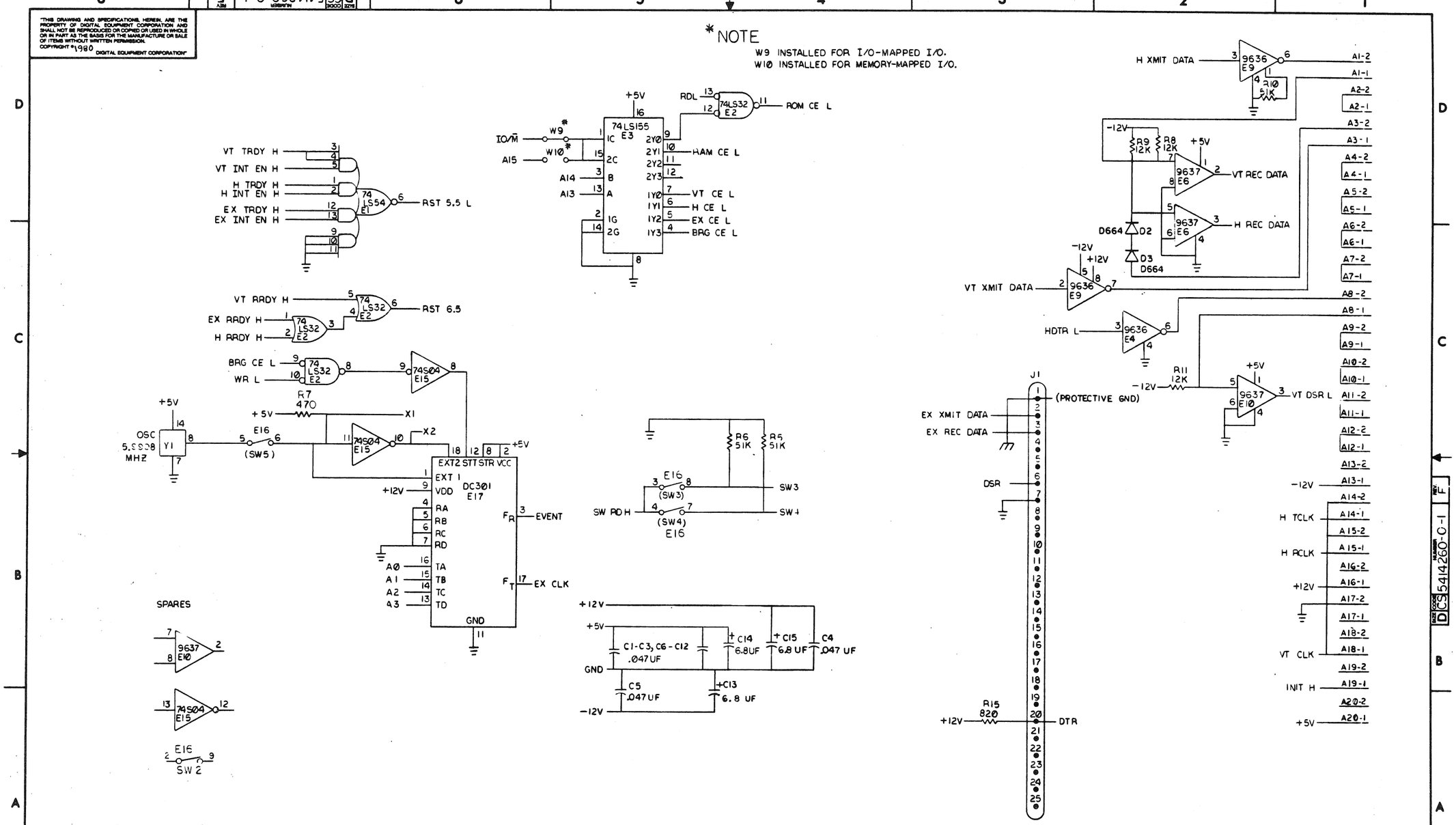

REVISION HISTORY		
DATE	ECO NUMBER	REV.

TITLE: STP FOUNDATION MODULE

DOCUMENT NUMBER			
SIZE D	CODE CS	NUMBER 5414260-0-1	REV. F
SCALE —		SHEET 2 OF 2	

DRD 138A