FIELD MAINTENANCE PRINT SET

TABLE OF CONTENTS

UNIT VARIATIONS COVERED BY THIS PRINT SET

RLØI-AK
Field Maintenance Print Set

Digital Equipment Corporation

PRINT SET ORDER NO.
MPØØ527

REVISIONS			
REV	A	B	
CHG. NO.	RL11-AK-CZØØ2 W. MAJOR	RLØI-CZØ34 B. MILLER	
DATE	11 MAY 77	9 JUN 77	

USED ON OPTION/MODEL	
RL01-AK	
SHEET 1 OF 1	

DRN.	B.K.NICHOLS	DATE 15-OCT-77
CHK'D	R.E.THELLEN	DATE 16-NOV-77
PROJ. ENG.	D.ELLIS	DATE 16-NOV-77
FIELD SERV.	R.MICKERSON	DATE 18-NOV-77

digital

TITLE: DISK DRIVE, MTG KIT & CARTRIDGE

SIZE	CODE	NUMBER	REV.
B	TC	RL01-AK-1	B

DIST.

DRB 124

REV. A | SIZE B | CODE TC | NUMBER RL01-AK-1

HOLE LOCATIONS FOR MOUNTING IN H950 AND H967 CABINETS

AVAILABLE SPACE BENEATH RLØ1	MOUNTING HOLES (FROM DATUM HOLE)	
	LOWER	UPPER
5.25	12	15
10.50	21	24
15.75	30	33
21.00	39	42
26.25	48	51
31.50	57	60

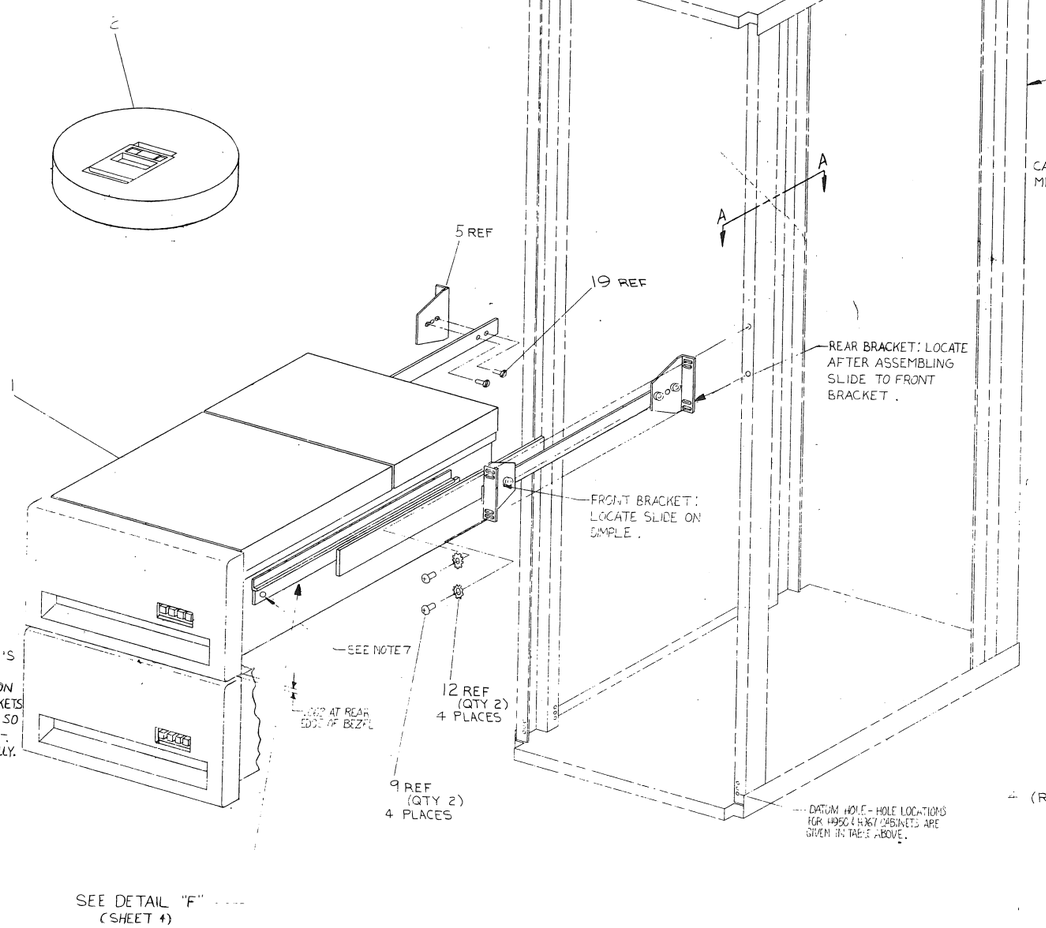

WHEN TWO RLØ1'S ARE MOUNTED IN A CABINET THE POSITION OF THE SLIDE BRACKETS MUST BE ADJUSTED SO THAT THE BEZELS ARE PARALLEL AND ALIGNED VERTICALLY.

SEE DETAIL "F" (SHEET 4)

RLØ1-AK
(SHOWN IN AN H950 CAB)

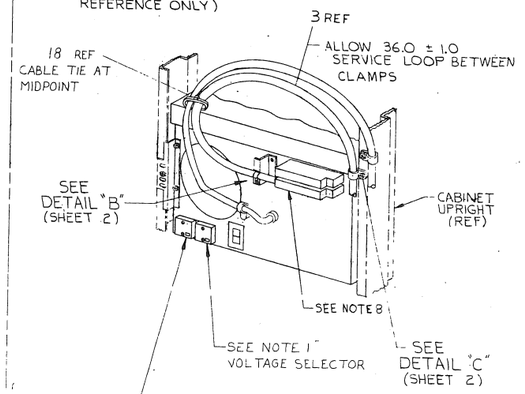

REAR VIEW OF RLØ1-AK DISK DRIVE (ITEM 1) TYPICAL FOR ALL CABS NOTE 11

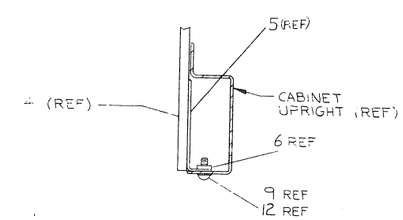

SECTION A-A
(SHOWING TYPICAL MOUNTING OF CHASSIS SLIDES TO CABINET UPRIGHTS)
SCALE: NONE

7. CONT.
   D. SECURE DRIVE TO SLIDES USING SCREWS SUPPLIED. (SEE DETAIL "F", SHEET 4)
   E. TO REMOVE DRIVE, EXTEND SLIDES FULLY, REMOVE SCREWS, RELEASE LATCHES AND LIFT OFF.
8. FOR LAST DRIVE IN A SYSTEM I/O CABLE PLUGS INTO EITHER SOCKET. TERMINATOR (SUPPLIED WITH CONTROLLER) PLUGS INTO THE OTHER.

NOTES CONT. ON SHT 2.

NOTES:

1. MACHINES ARE SHIPPED CONFIGURED FOR 110 V, AND NOMINAL VOLTAGE RANGE. FOR 220 V OPERATION REMOVE TWO SCREWS FROM "VOLTAGE SELECTOR" COVER, WITHDRAW THE COVER, AND RE-INSERT TURNED UPSIDE DOWN. AFTER INSERTION, 220 MUST BE SHOWING THRU THE SMALL WINDOW. REPLACE THE TWO SCREWS, CUT OFF 110V PLUG ON THE POWER CORD, REPLACE BY 220V PLUG (ITEM #20). FOR COLOR CODE SEE DETAIL "G", SHEET 4.
2. "LOW LINE" AND "NOMINAL LINE" ARE DEFINED ON COVER OF "VOLTAGE RANGE SELECTOR". FOR LOW LINE VOLTAGE OPERATION REMOVE TWO SCREWS FROM "VOLTAGE RANGE SELECTOR" COVER, WITHDRAW THE COVER AND RE-INSERT IT TURNED UPSIDE DOWN. AFTER INSERTION, "LOW" MUST BE SHOWING THRU THE SMALL WINDOW. REPLACE THE TWO SCREWS.
3. WHEN AN RLØ1-AK IS ORDERED IN CONJUNCTION WITH H9500, H9501, H9502, H9503, H9600, H9601, H9602, H9603 INTERLOCK KIT(S) (REF 21) OR CABLE RESTRAINT SYSTEM(S) (REF 22) MUST BE ORDERED AND INSTALLED.
4. WHEN AN RLØ1-AK IS ORDERED IN CONJUNCTION WITH ~~A~~ H9503 H9603 THE TRIM PIECES (H9514-B) MUST BE ORDERED.
5. WHEN AN RLØ1-AK IS ORDERED IN CONJUNCTION WITH A H9500/H9600 TRIM PIECES (H9514-A) MUST BE ORDERED.
6. TO ATTACH SHIPPING BRACKET (ITEM REMOVE TWO SCREWS AND TWO LOCKWASHERS FROM ONE SIDE OF THE POWER PANEL ON THE REAR OF DISK DRIVE (ITEM 1), POSITION A SHIPPING BRACKET TO DETERMINE LOCATION OF "U" NUT (ITEM 13) AND ATTACH BRACKET USING ORIGINAL SCREWS AND LOCKWASHERS AND ITEMS 12 AND 9 (AS SHOWN IN DETAIL D) BRACKET MAY BE ATTACHED TO EITHER SIDE OF UNIT.
7. TO MOUNT RLØ1 IN CABINET:
   A. MOUNT BRACKETS AND SLIDES TO UPRIGHTS.
   B. EXTEND SLIDES AS FAR AS POSSIBLE BY RELEASING CATCHES. (SEE DETAIL "F" SHT 4)
   C. PLACE DRIVE ON SLIDES AND PUSH BACK UNTIL ENDS OF RAILS FIT UNDER TABS ON SLIDES AND LATCHES ENGAGE.

CAUTION: OFF SHEET PARTS LIST EXISTS.
SEE K-PL-RL01-AK-DBP (Z0908).

REV.	CHANGE NO.	CHK	REMARKS
A	RLØ1-AK-CX0061 K. GUENZEL		
B	RLØ1-AK-CZ0852 W. MAJOR		
C	RLØ1-CZ0928 B. MILLER		
D	RLØ1-CZ0929 B. MILLER		
E	RLØ1-CZ0934 B. MILLER		
F	RLØ1-CZ0942 K. GUENZEL		

DESCRIPTION	DWG./PART NO.	ITEM NO.
UNLESS OTHERWISE SPECIFIED DIMENSIONS ARE IN INCHES		

ANGLES ±0° 30'	CLASS OF ACCURACY (CHECK ONE)	NOMINAL DIMENSION RANGE INCHES					
SURFACE QUALITY IN MICROINCHES		OVER 0 TO 2.5	OVER 2.5 TO 12	OVER 12 TO 48	OVER 48 TO 120	OVER 120 TO 48.0	OVER 48.0 TO 80.0
	MEDIUM	±.004	±.008	±.012	±.016	±.024	±.04
	PREFERRED	±.012	±.016	±.025	±.04	±.063	±0.1

QUANTITY & VARIATION

THIRD ANGLE PROJECTION

REMOVE BURRS AND BREAK SHARP CORNERS

DO NOT SCALE DWG

MATERIAL SEE PARTS LIST

DRN.
CHK'D
ENG.
PROJ. ENG.
PROD.

NEXT HIGHER ASSY. B-DD-RLØ1-AK

SCALE NONE

SHEET 1 OF 4

FIRST USED ON RLØ1

digital

TITLE DISK DRIVE MTG. KIT & CARTRIDGE

SIZE E CODE UA NUMBER RLØ1-AK

DWG. NO. RLØ1-AK-0 REV. F

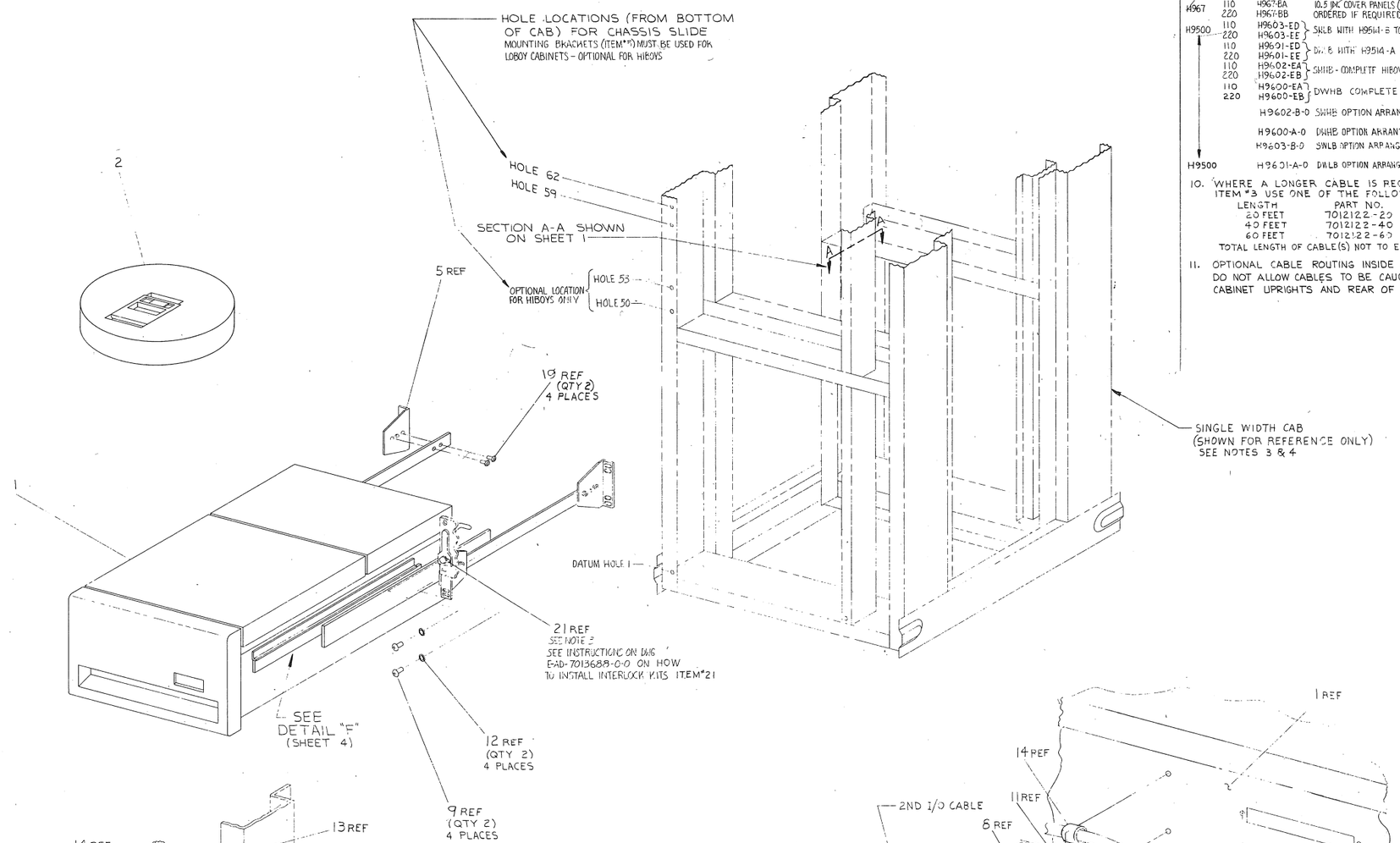

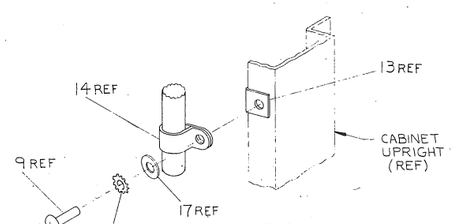

DETAIL "C"
SCALE: NONE
ONE CLAMP FOR I/O CABLE ITEM 3 REF
ONE CLAMP FOR POWER CORD

RLØ1-AK
(SHOWN IN A SINGLE WIDTH CAB)
FOR 220 V VARIATION, SEE NOTE 1, REAR VIEW OF DRIVE ON SHT 1 AND ITEM #20 IN PARTS LIST
FOR LOW LINE VOLTAGE VARIATION SEE NOTE 2.

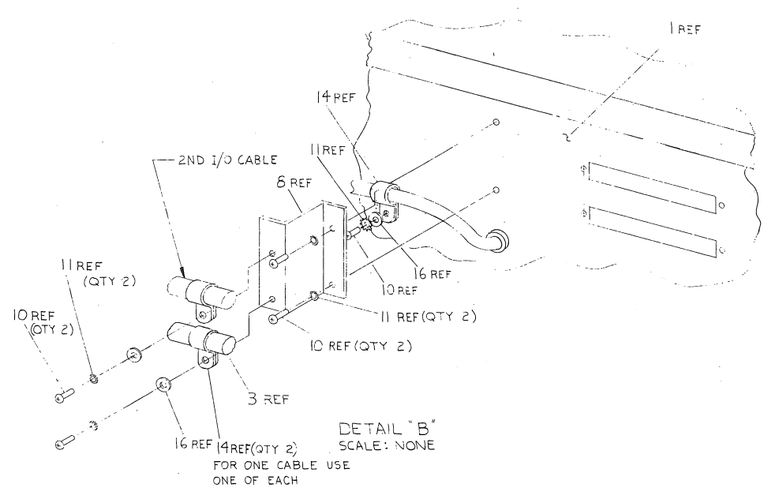

DETAIL "B"
SCALE: NONE

NOTES: (CONT.)

9. CABINET OPTIONS INCLUDE SKINS, DOORS, COVERS, TRIM, & PWR CONTROLLERS.

TYPE	VOLTAGE	DWG	REMARKS
H950	110	H960-BC	INCLUDES FIVE 10.5 IN. PANELS
	220	H960-BC	
H967	110	H967-BA	10.5 IN. COVER PANELS (H950-QA) MUST BE ORDERED IF REQUIRED.
	220	H967-BB	
H9500	110	H9603-ED	SWLB WITH H9514-B TOP COVERS.
	220	H9603-EE	
	110	H9601-ED	DWLB WITH H9514-A TOP COVERS.
	220	H9601-EE	
	110	H9602-EA	SWHB - COMPLETE HIBOY CABINET.
	220	H9602-EB	
	110	H9600-EA	DWHB COMPLETE HIBOY CABINET
	220	H9600-EB	
		H9602-B-0	SWHB OPTION ARRANGEMENT DWG. ORDER AS REQ'D
		H9600-A-0	DWHB OPTION ARRANGEMENT DWG. ORDER AS REQ'D
		H9603-B-0	SWLB OPTION ARRANGEMENT DWG. ORDER AS REQ'D
H9500		H9601-A-0	DWLB OPTION ARRANGEMENT DWG. ORDER AS REQ'D

10. WHERE A LONGER CABLE IS REQUIRED THAN ITEM #3 USE ONE OF THE FOLLOWING:

LENGTH	PART NO.
20 FEET	7012122-20
40 FEET	7012122-40
60 FEET	7012122-60

TOTAL LENGTH OF CABLE(S) NOT TO EXCEED 100 FEET

11. OPTIONAL CABLE ROUTING INSIDE CHANNEL UPRIGHTS. DO NOT ALLOW CABLES TO BE CAUGHT BETWEEN CABINET UPRIGHTS AND REAR OF DISK DRIVE.

REVISIONS		
CHK	CHANGE NO.	REV.

TITLE	SIZE	CODE	NUMBER	REV.
DISK DRIVE MTG KIT & CARTRIDGE	E	UA	RLØ1-AK-2	F
SCALE NONE	SHEET 2 OF 4	DIST.		

FIELD LOCK E UA RLØ1-AK-Ø REV. F

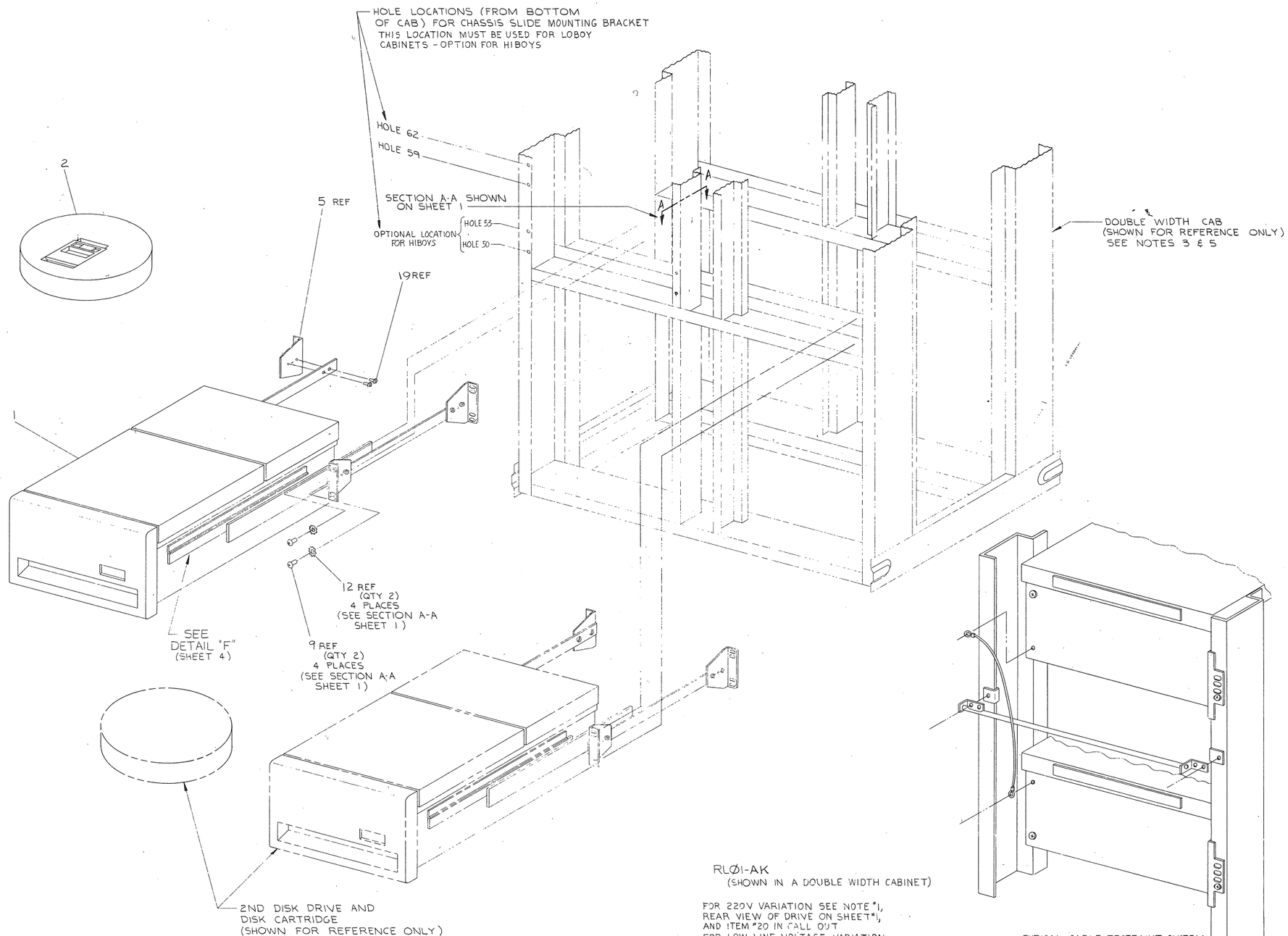

REVISIONS		
CHK	CHANGE NO.	REV.

TITLE	SIZE	CODE	NUMBER	REV.
DISK DRIVE MTG KIT & CARTRIDGE	E	UA	RLØ1-AK-Ø	F

SCALE NONE SHEET 3 OF 4 DIST.

DEC FORM NO. 2-2-2-2

SIZE CODE E UA NUMBER RLØ1-AK-Ø REV. F

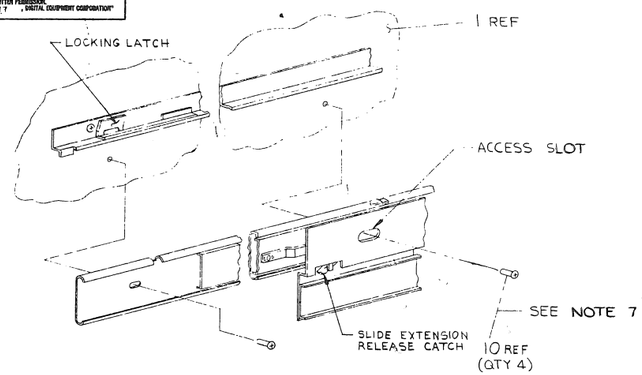

DETAIL 'F'
SEE NOTE 7

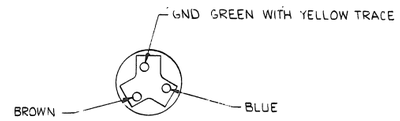

DETAIL G
REAR VIEW OF ITEM 20
WITH STRAIN RELIEF REMOVED

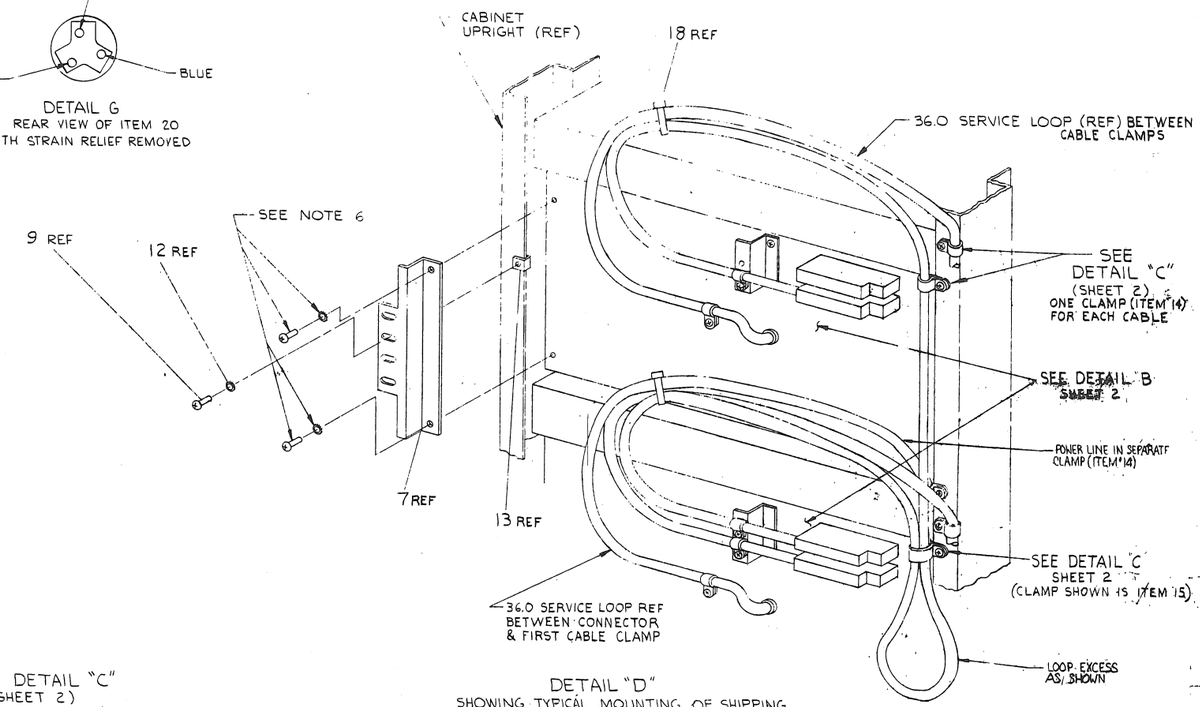

DETAIL "D"
SHOWING TYPICAL MOUNTING OF SHIPPING BRKT (ITEM 7) AND CABLE ROUTING FOR DUAL DRIVE SYSTEM (CPU BELOW) IN AN H95Ø CABINET
NOTE 11

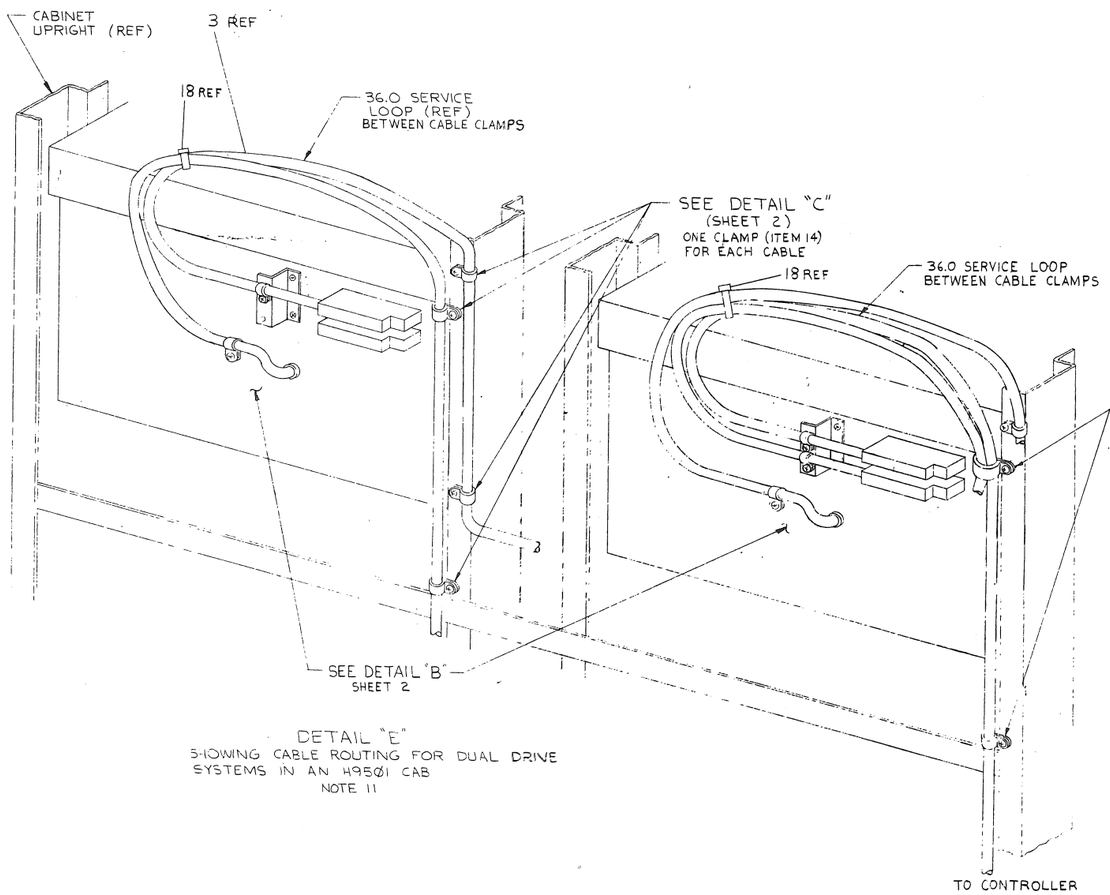

DETAIL "E"
SHOWING CABLE ROUTING FOR DUAL DRIVE SYSTEMS IN AN H95Ø1 CAB
NOTE 11

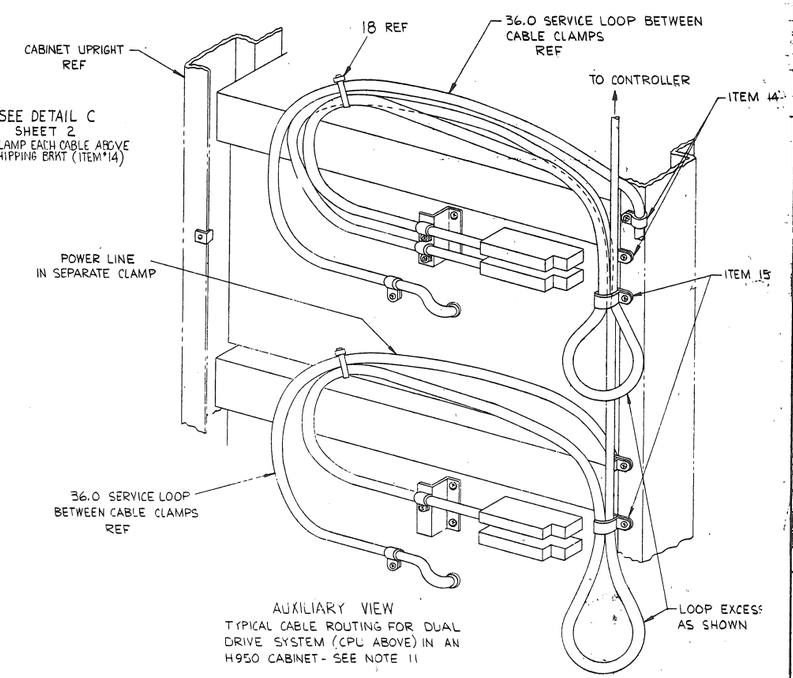

AUXILIARY VIEW
TYPICAL CABLE ROUTING FOR DUAL DRIVE SYSTEM (CPU ABOVE) IN AN H950 CABINET - SEE NOTE 11

REVISIONS		
CHK	CHANGE NO.	REV.

TITLE DISK DRIVE MTG. KIT & CARTRIDGE	SIZE E	CODE UA	NUMBER RL01-AK-0	REV. E
SCALE NONE	SHEET 4 OF 4	DIST.		

FIELD MAINTENANCE PRINT SET

TABLE OF CONTENTS

UNIT VARIATIONS COVERED BY THIS PRINT SET
RL01-A

RLØI

Field Maintenance Print Set

Digital Equipment Corporation

PRINT SET NO.
MPØØ347

REV. F

SIZE B | CODE TC | NUMBER RLØI-Ø-I

REVISIONS			
REV	D	E	F
CHG. NO.	REDRAWN # PER ECO RLØI-CXØ36 M.BROWN	RLØI-CXØ39 M.ZARICH	RLØI-CXØ4Ø M.ZARICH
DATE	W.G.M. 26 JUL 79	RPM 11 OCT 79	RPM 22 OCT 79

USED ON OPTION/MODEL

SHEET 1 OF 1

DRN. G.SCHNEIDER	DATE 20-OCT-77	TITLE: RL01 DISK DRIVE
CHK'D G.RICHENBERG	DATE 20-OCT-77	
PROJ. ENG. P. ARNOLD	DATE 20-OCT-77	
FIELD SERV. J. REED	DATE 21-OCT-77	

digital

SIZE	CODE	NUMBER	REV.
B	TC	RLØI-Ø-I	F

DIST.

DRB 124

NOTES:

1. LOWER HEAD (ITEM 65) SHALL BE POSITIONED REARWARDS AGAINST PIN IN CARRIAGE

2. ALL SCREWS TO BE TIGHTENED AS FOLLOWS:

4-40	SCREW,	TORQUE	3.5 ± 0.5	IN LBS
6-32	"	"	5.0 ± 1.0	"
8-32	"	"	10.0 ± 1.0	"
10-32	"	"	18.0 ± 2.0	"

3. DRIVE BELT TENSION 10.0 ± 1.0 LBS

4. 4-40 HEAD MTG BOLTS TO BE TIGHTENED TO 3.5 ± 0.5 IN LBS.

5. [illegible] RING HARDWARE (ITEM 70) [illegible] LBS.

6. [illegible] HARDWARE TO BE [illegible] OF THE DRIVING UNIT.

7. [illegible] BELTS [illegible] ON LOWEST POINT [illegible] OF PULLEY.

8. [illegible] BOLTS, SEE DRAWING 70-6846 [illegible]

9. DRIVING [illegible] TO BE WITHIN .004 AT BOTH [illegible] OF CARRIAGE TRAVEL.

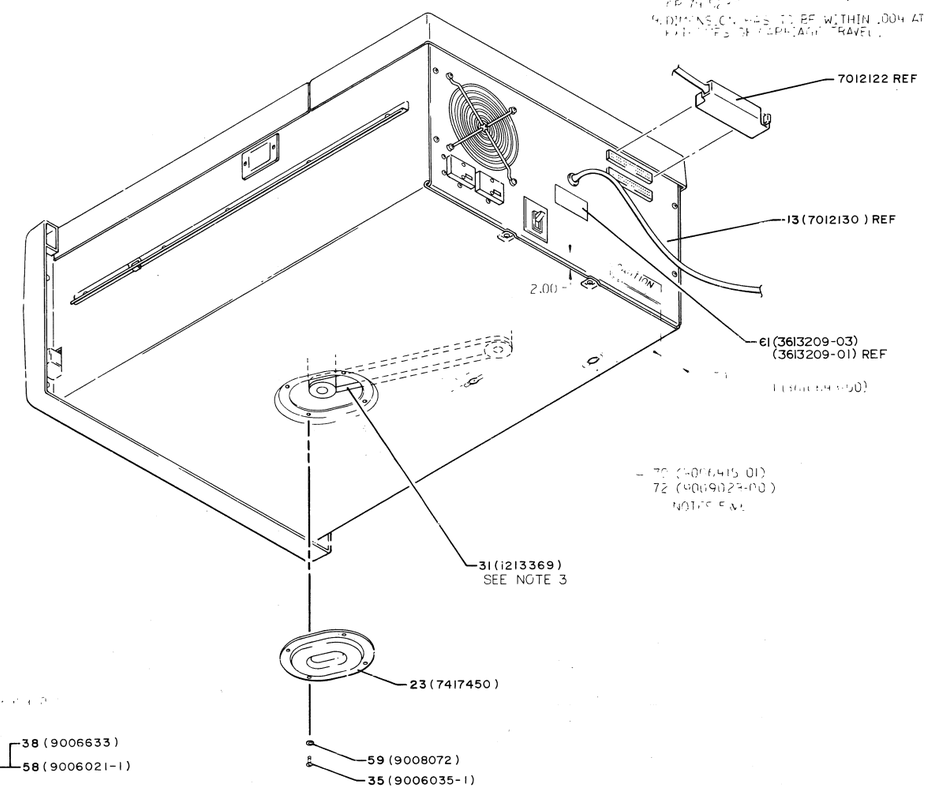

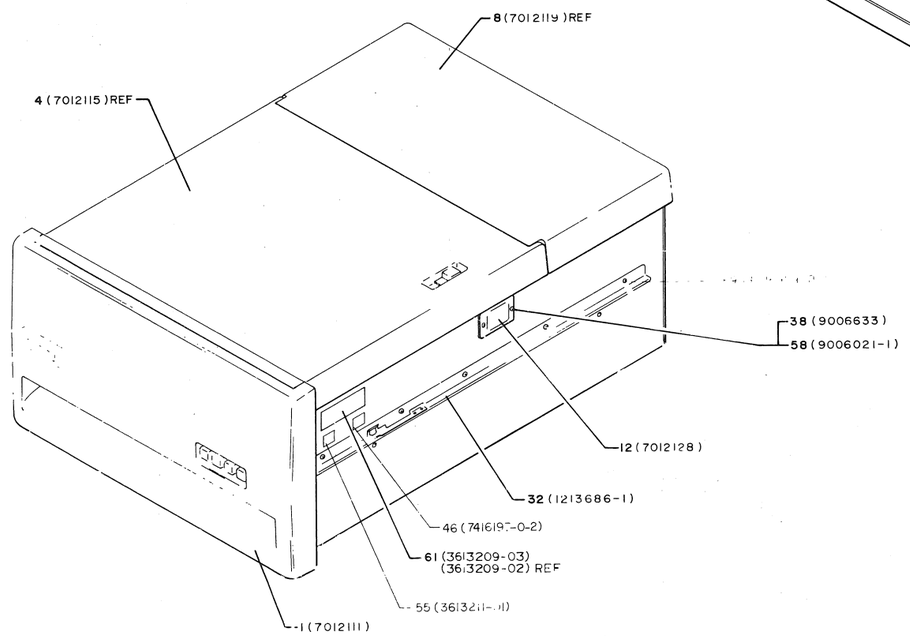

CAUTION: OFF SHEET PARTS LIST EXISTS.
SEE K-PL-RL01-0-DBP (Z0499)

A	RELEASED AT REV A		
B	RL01-0001 G.SCHNEIDER		
C	PL01-0009 G.SCHNEIDER		
D	RL01-CX010 K.GUENZEL		
E	RL01-AC002 G.DONOVAN		
F	RL01-CX012 P.ERT MILLER		
J	RL01-CZ021 K.GUENZEL		
K	RL01-CZ021 B.MILLER		
L	RL01-SZ022 K.GUENZEL		
M	RL01-CZ021 K.GUENZEL		
	RL01-CX037 F.MILLER		
	RL01-CX039 Z.MILLER		
	RL01-CX040 F.MILLER		
V	RL01-CX041 K.GUENZEL		

digital

RL01 DISK DRIVE ASSEMBLY

E UA RL01-0-0

4

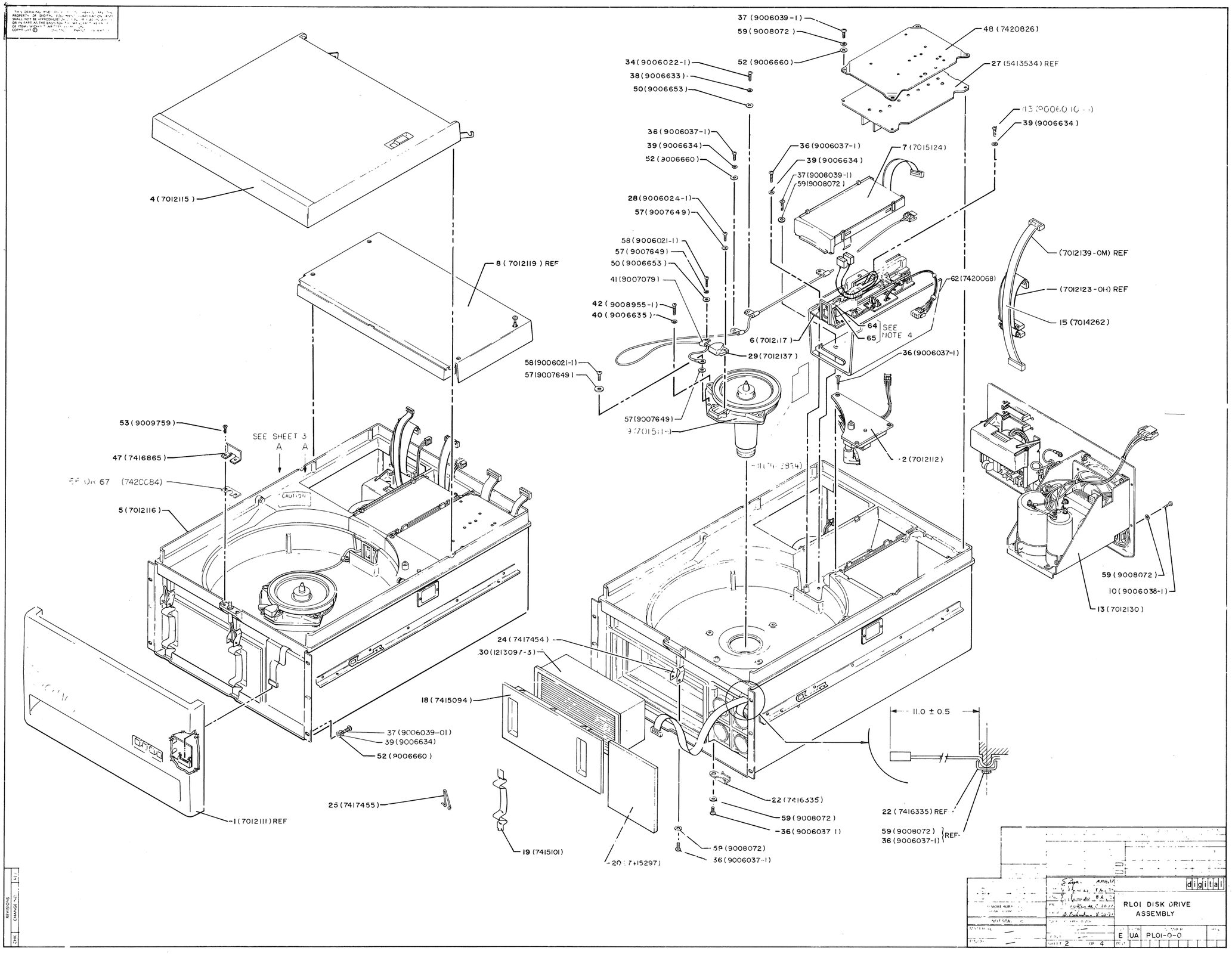
37 (9006039-1)
59 (9008072)
48 (7420826)
34 (9006022-1)
52 (9006660)
27 (5413534) REF
38 (9006633)
50 (9006653)
43 (9006010-1)
39 (9006634)
36 (9006037-1)
39 (9006634)
52 (9006660)
36 (9006037-1)
39 (9006634)
37 (9006039-1)
59 (9008072)
7 (7015124)
4 (7012115)
28 (9006024-1)
57 (9007649)
58 (9006021-1)
57 (9007649)
50 (9006653)
41 (9007079)
8 (7012119) REF
(7012139-0M) REF
62 (7420068)
(7012123-0H) REF
42 (9008955-1)
40 (9006635)
15 (7014262)
64
65
SEE NOTE 4
6 (7012117)
29 (7012137)
36 (9006037-1)
58 (9006021-1)
57 (9007649)
53 (9009759)
SEE SHEET 3
A A
57 (9007649)
2 (7012112)
47 (7416865)
CAUTION
5 (7012116)
59 (9008072)
10 (9006038-1)
13 (7012130)
24 (7417454)
30 (1213097-3)
18 (7415094)
11.0 ± 0.5
37 (9006039-01)
39 (9006634)
52 (9006660)
22 (7416335)
59 (9008072)
36 (9006037-1)
22 (7416335) REF
59 (9008072)
36 (9006037-1)
REF
25 (7417455)
1 (7012111) REF
19 (7415101)
20 (7415297)
59 (9008072)
36 (9006037-1)
digital
RL01 DISK DRIVE
ASSEMBLY
E UA RL01-0-0
SHEET 2 OF 4
REVISIONS

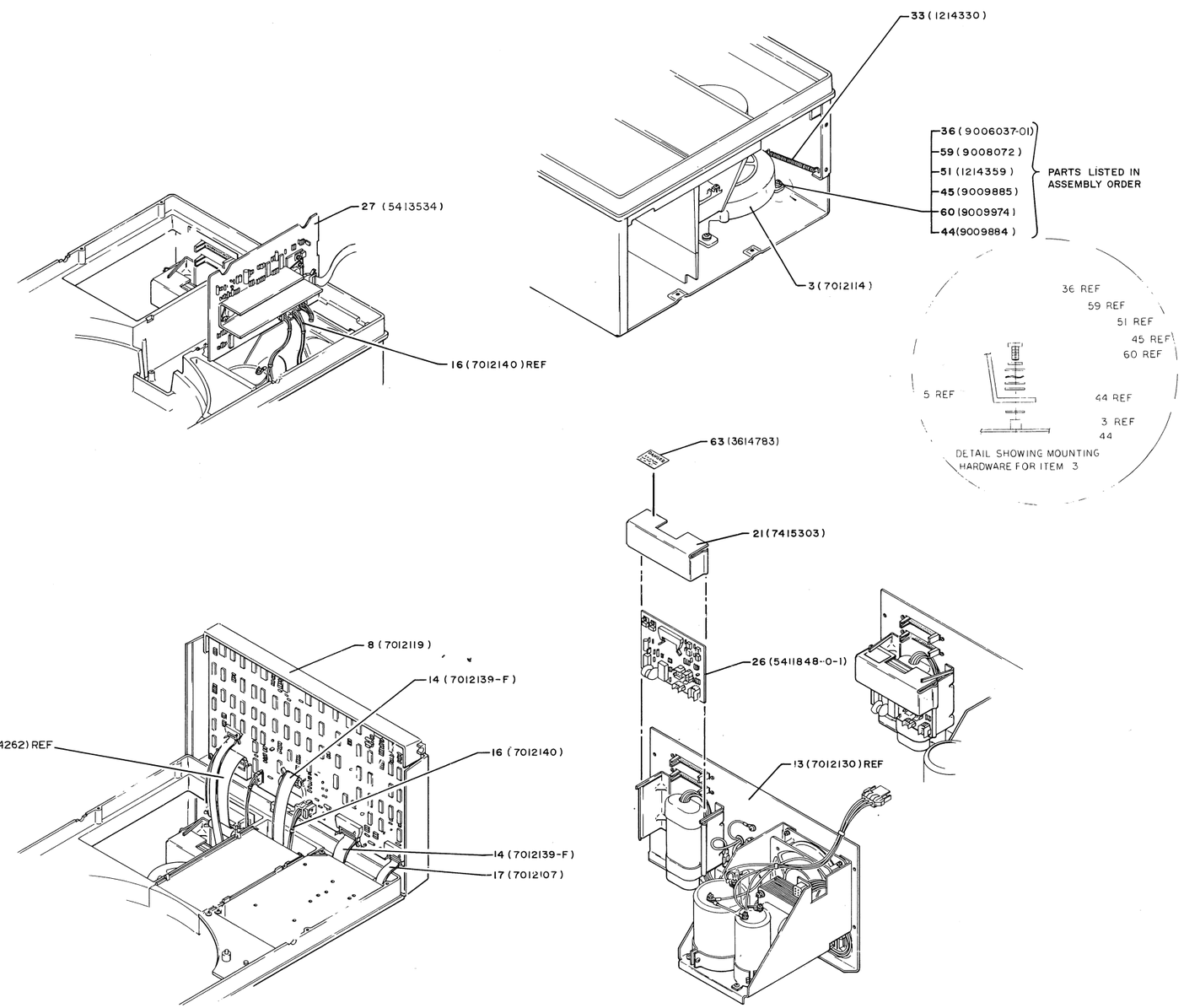

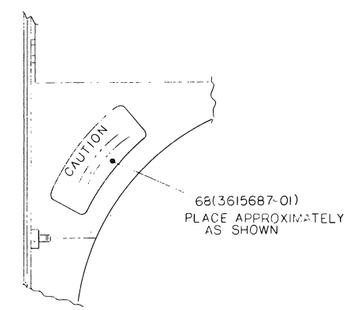

VIEW A-A

DESCRIPTION		DWG PART NO	ITEM NO
UNLESS OTHERWISE SPECIFIED DIMENSIONS ARE IN INCHES			
ANGULAR	CLASS OF ACCURACY	NOMINAL DIMENSION RANGE INCHES	
SURFACE QUALITY	CHECK AND		
QUANTITY & VARIATION	MINIMUM		
	PREFERRED		

THIRD ANGLE PROJECTION	DRN	FIRST USED ON
	CHK	digital
REMOVE BURRS AND BREAK SHARP CORNERS	ENG	TITLE RL01 DISK DRIVE ASSEMBLY
	PROJ ENG	
	PROD	
DO NOT SCALE DWG	NEXT HIGHER ASSY	
MATERIAL	SCALE	SIZE E · CODE UA · NUMBER RL01-0-0 · REV V
FINISH	SHEET 3 OF 4	DIST

REVISIONS		
CHK	CHANGE NO	REV

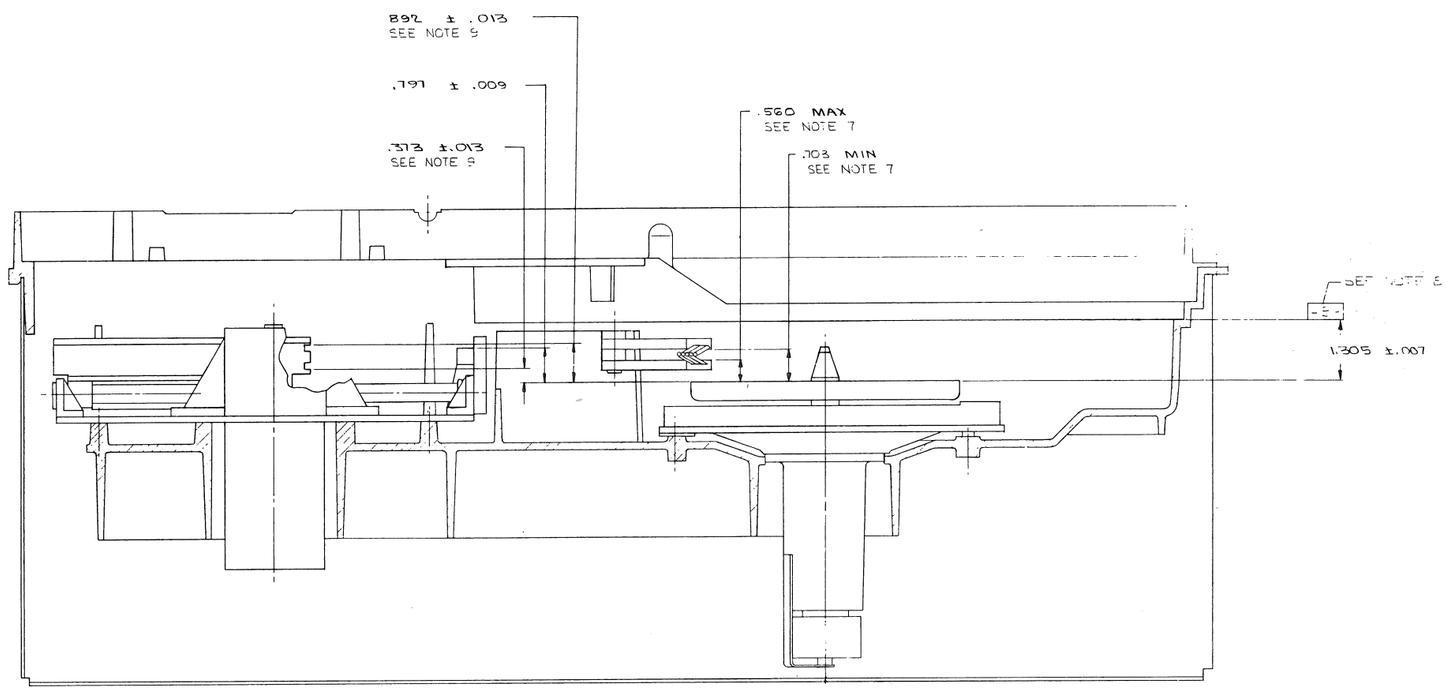

QUANTITY & VARIATION	DESCRIPTION	DWG./PART NO.	ITEM NO.

UNLESS OTHERWISE SPECIFIED DIMENSIONS ARE IN INCHES

ANGLES ±0° 30'	CLASS OF ACCURACY (CHECK ONE)	NOMINAL DIMENSION RANGE INCHES					
SURFACE QUALITY IN MICROINCHES		OVER 0 TO 0.2	OVER 0.2 TO 1.2	OVER 1.2 TO 4.0	OVER 4.0 TO 12.0	OVER 12.0 TO 40.0	OVER 40.0 TO 80.0
	MEDIUM ☐	±.004	±.008	±.012	±.016	±.024	±.04
	PREFERRED ☐	±.012	±.016	±.025	±.04	±.063	±0.1

THIRD ANGLE PROJECTION

REMOVE BURRS AND BREAK SHARP CORNERS

DO NOT SCALE DWG

MATERIAL

FINISH

DRN.
CHK'D.
ENG.
PROJ. ENG.
PROD.
NEXT HIGHER ASSY.
SCALE
SHEET 4 OF 2

FIRST USED ON

digital

TITLE
RL01 DISK DRIVE ASSEMBLY

SIZE	CODE	NUMBER	REV.
E	UA	RL01-[illegible]	V

DIST.

REVISIONS		
CHK.	CHANGE NO.	REV.

DEC FORM NO. DRE 100 B.

SIZE	CODE	NUMBER	REV.
E	UA	[illegible]	V

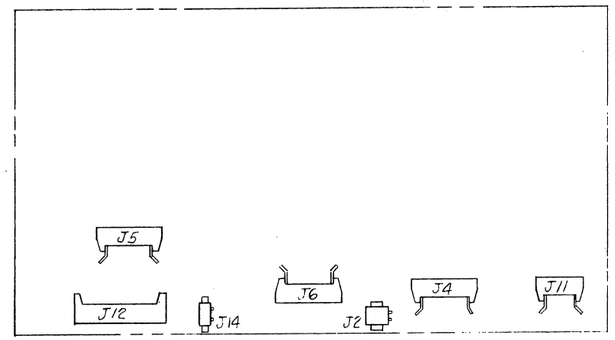

LOGIC BOARD

FIG 1

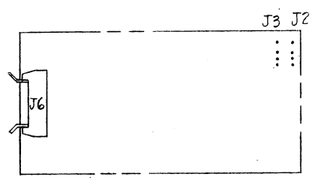

R/W BOARD

FIG 2

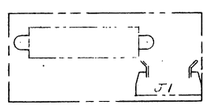

FRONT PANEL BOARD

FIG 3

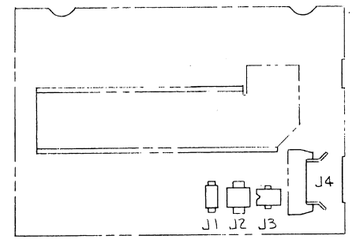

D.C. SERVO BOARD

FIG 4

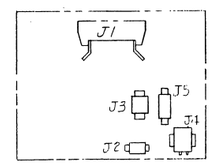

A.C. SERVO BOARD

FIG 5

REV.	CHANGE NO.	CHK
A	RELEASED AT REV A	
B	RL01-CX010 DWG-N°RL01-03 WAS RL01-0	
C	RL01-CZ034 B.MILLER	M.C.M. 9 JUN 79

REVISIONS

MAKEFACE P-1655

DESCRIPTION	DWG./PART NO.	ITEM NO

UNLESS OTHERWISE SPECIFIED DIMENSIONS ARE IN INCHES

ANGLES ±0° 30'	CLASS OF ACCURACY (CHECK ONE)	NOMINAL DIMENSION RANGE INCHES					
		OVER 0 TO 0.2	OVER 0.2 TO 1.2	OVER 1.2 TO 4.0	OVER 4.0 TO 12.0	OVER 12.0 TO 40.0	OVER 40.0 TO 80.0
SURFACE QUALITY IN MICROINCHES	MEDIUM ☐	±.004	±.008	±.012	±.016	±.024	±.04
	PREFERRED ☐	±.012	±.016	±.025	±.04	±.063	±0.1

QUANTITY & VARIATION

THIRD ANGLE PROJECTION

REMOVE BURRS AND BREAK SHARP CORNERS

DO NOT SCALE DWG

MATERIAL

FINISH

DRN.	9-27-77	
CHK'D	28-SEP-77	
ENG.	9-27-77	
PROJ. ENG.	10/11/77	
PROD.	11/11/77	
NEXT HIGHER ASSY.	B-DD-RL01-0	
SCALE	1/2	
SHEET	1 OF 2	

FIRST USED ON RL01

digital

TITLE

RL01
SYSTEM CABLING

SIZE	CODE	NUMBER	REV.
D	IC	RL01-0-3	C

DIST.

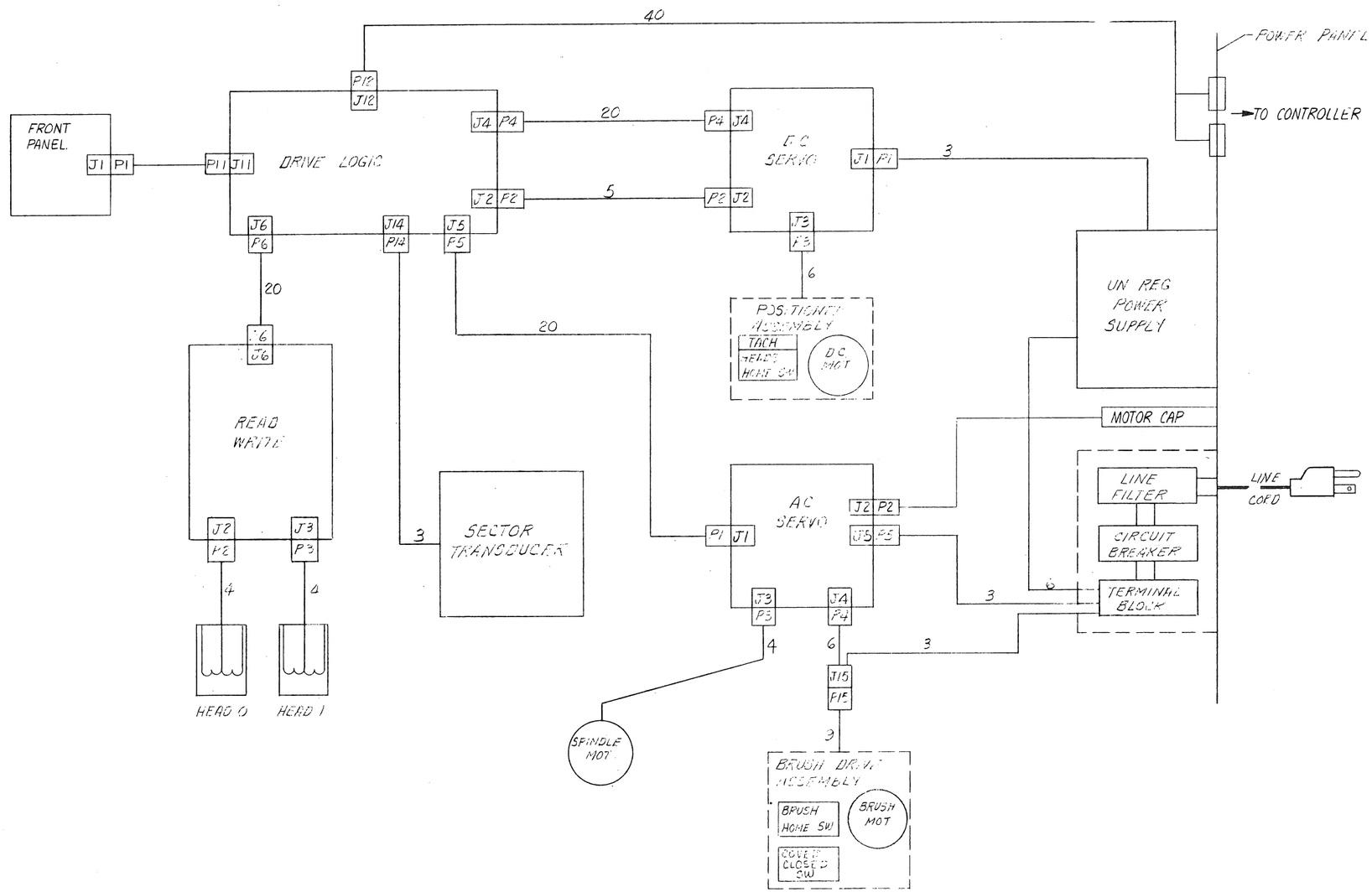

DESCRIPTION	DWG./PART NO.	ITEM NO.

UNLESS OTHERWISE SPECIFIED DIMENSIONS ARE IN INCHES

ANGLES ±0° 30'	CLASS OF ACCURACY (CHECK ONE)	NOMINAL DIMENSION RANGE INCHES					
		OVER 0 TO 0.2	OVER 0.2 TO 1.2	OVER 1.2 TO 4.0	OVER 4.0 TO 12.0	OVER 12.0 TO 40.0	OVER 40.0 TO 80.0
SURFACE QUALITY IN MICROINCHES	MEDIUM	±.004	±.008	±.012	±.016	±.024	±.04
	PREFERRED	±.012	±.016	±.025	±.04	±.063	±0.1

QUANTITY & VARIATION

THIRD ANGLE PROJECTION

REMOVE BURRS AND BREAK SHARP CORNERS

DO NOT SCALE DWG

MATERIAL

FINISH

DRN. R. Yuen 9-27-77
CHK'D
ENG. 9-27-77
PROJ. ENG.
PROD.
NEXT HIGHER ASSY.
B-DD-RLØ1-Ø
SCALE
SHEET 2 OF 2

FIRST USED ON RLØI

digital

TITLE
RLØI
SYSTEM CABLING

SIZE	CODE	NUMBER	REV.
D	IC	RLØI-Ø-3	C

DIST.

REV.	REVISIONS	CHK
	CHANGE NO.	

DEC FORM NO. ED 100-0

NOTES:
1. INT TOOTH LOCK WASHERS (ITEM 23) ARE USED OVER AND UNDER GROUND TERMINALS.
2. ORIENT TERMINALS AS SHOWN.

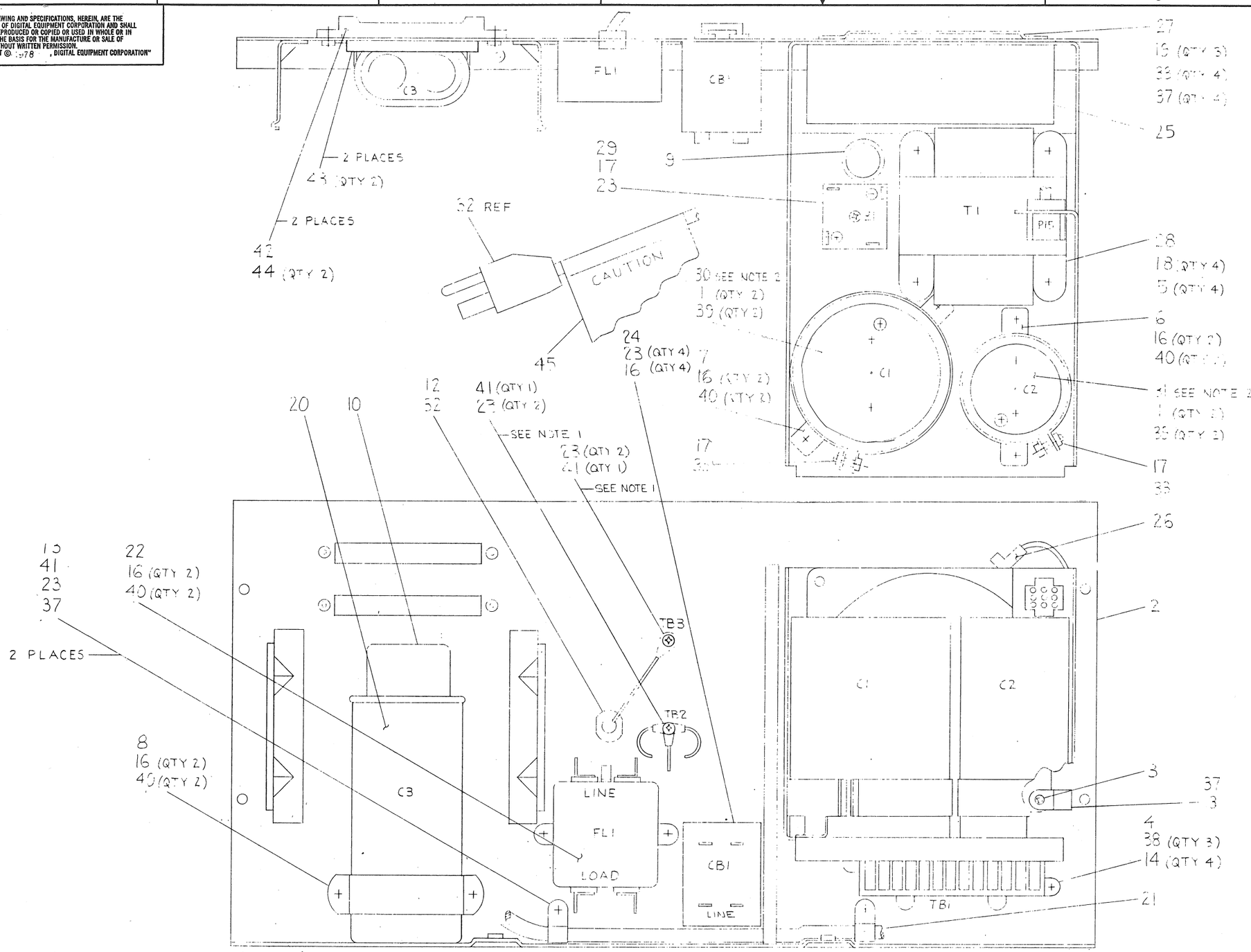

CAUTION OFF SHEET PARTS LIST EXISTS.
SEE K PL-7012130-0-DRP (Z0249)

REV.	CHK	CHANGE NO.	REVISIONS
A	AT	RELEASED AT REV A PREVIOUS REV X009	
B		7012130-0001 G.REICHENBERG	
C		7012130-0002 G.SCHNEIDER	
D		RL01-00009 G.SCHNEIDER	
E		7012130-CX003 K.GUENZEL	
F		7012130-CX004 G.REICHENBERG	
T		7012130-CX005 G.REICHENBERG	
J		RL01-CZ016 K.GUENZEL	
K		7012130-CZ006 K.GUENZEL	
L		7012130-CZ007 K.GUENZEL	
M		7012130-CZ008 K.GUENZEL	
N		7012130-CX009 K.GUENZEL	
P		7012130-CX010 K.GUENZEL	
R		RL02-CX008 K.GUENZEL	

DESCRIPTION	DWG./PART NO.	ITEM NO.

UNLESS OTHERWISE SPECIFIED DIMENSIONS ARE IN INCHES

ANGLES ±0° 30'	CLASS OF ACCURACY (CHECK ONE)	OVER 0 TO 0.2	OVER 0.2 TO 1.2	OVER 1.2 TO 4.0	OVER 4.0 TO 12.0	OVER 12.0 TO 40.0	OVER 40.0 TO 80.0
SURFACE QUALITY IN MICROINCHES	MEDIUM	±.004	±.008	±.012	±.016	±.024	±.04
	PREFERRED	±.012	±.016	±.025	±.04	±.063	±0.1

QUANTITY & VARIATION

THIRD ANGLE PROJECTION

REMOVE BURRS AND BREAK SHARP CORNERS

DO NOT SCALE DWG

MATERIAL: SEE PARTS LIST

FINISH: —/—/—

DRN.	D. MELCHIOR	12/AUG/78
CHK'D	G. SCHNEIDER	24/AUG/77
ENG.	G. SCHNEIDER	24/AUG/77
PROJ. ENG.	P. ARNOLD	30/AUG/77
PROD.	B. RYLANDER	30/AUG/77

NEXT HIGHER ASSY.

E-UA-RL01-0-0

SCALE: 1/1

SHEET 1 OF 3

FIRST USED ON: RL01

digital

TITLE: POWER PANEL ASSY

SIZE	CODE	NUMBER	REV.
D	AD	7012130-0-0	R

DIST.

DEC FORM NO. DBD 100-C

MASTERFACE P-2184

NOTES:

1. INPUT VOLTAGE 50 OR 60 HZ
   90 – 110, 105 – 128 VAC
   180 – 220, 210 – 256 VAC
2. OUTPUT VOLTAGE ± 11.5 VDC MIN AT MIN POINT OF THE RIPPLE. 18 VDC MAX AT HIGH LINE. (MAX OF 25 VDC AT HIGH LINE NO LOAD)
3. OUTPUT CURRENT: POSITIVE OUTPUT
   2.5 AMP CONTINUOUS
   3.5 AMP PULSE "25 MS"
   NEGATIVE OUTPUT
   .25 AMP CONTINUOUS
   3.5 AMP PULSE "25 MS"
   PULSE CURRENT ON ALTERNATE OUTPUT AT A 65 MS OUT CYCLE.
4. OUTPUT RIPPLE AT 110 VOLTS
   A. NO LOAD 100 mV P/P
   B. + 2.5 A 600 mV P/P
   – .25 A 300 mV P/P
   C. + 2.5 A 600 mV P/P
   – 3.75 A 1.5 V DURING PULSE
   RIPPLE AT 90 V RMS
   + 2.5 A 500 mV
   – 3.75 A 2 V
   + 6 A 900 mV
   – .25 A 400 mV
5. HIGH POT TEST PER UL 478
   CONNECT BOTH AC LEADS TO THE POSITIVE TERMINAL OF THE SUPPLY AND GRN WIRE GROUND TO THE NEGATIVE TERMINAL OF THE SUPPLY. CLOSE CIRCUIT BREAKER AND INCREASE VOLTAGE TO 1750 VDC, ANY CURRENT INDICATES FAILURE.

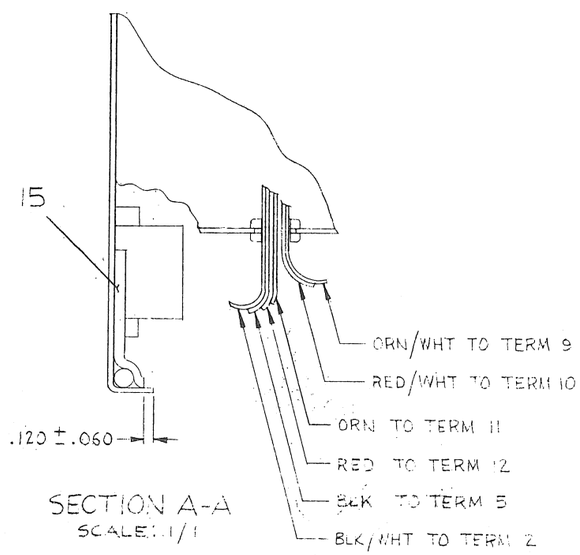

SECTION A-A
SCALE: 1/1

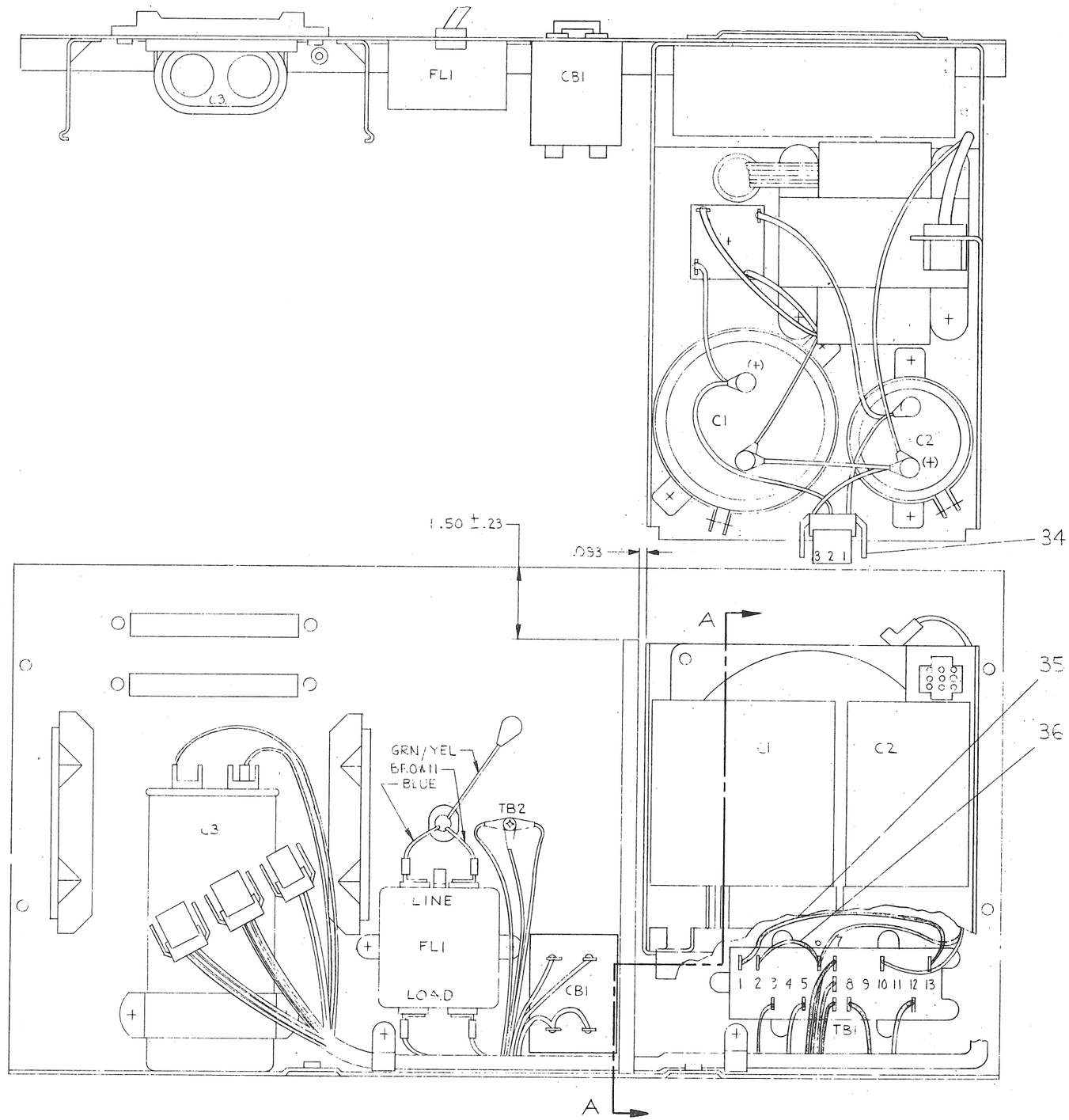

REVISIONS		
CHK	CHANGE NO.	REV.

TITLE	SIZE	CODE	NUMBER	REV.
POWER PANEL ASSY	D	AD	7012130 – 0 – 0	R
SCALE: 1/1 SHEET 2 OF 3	DIST.			

DEC FORM NO. 40 537

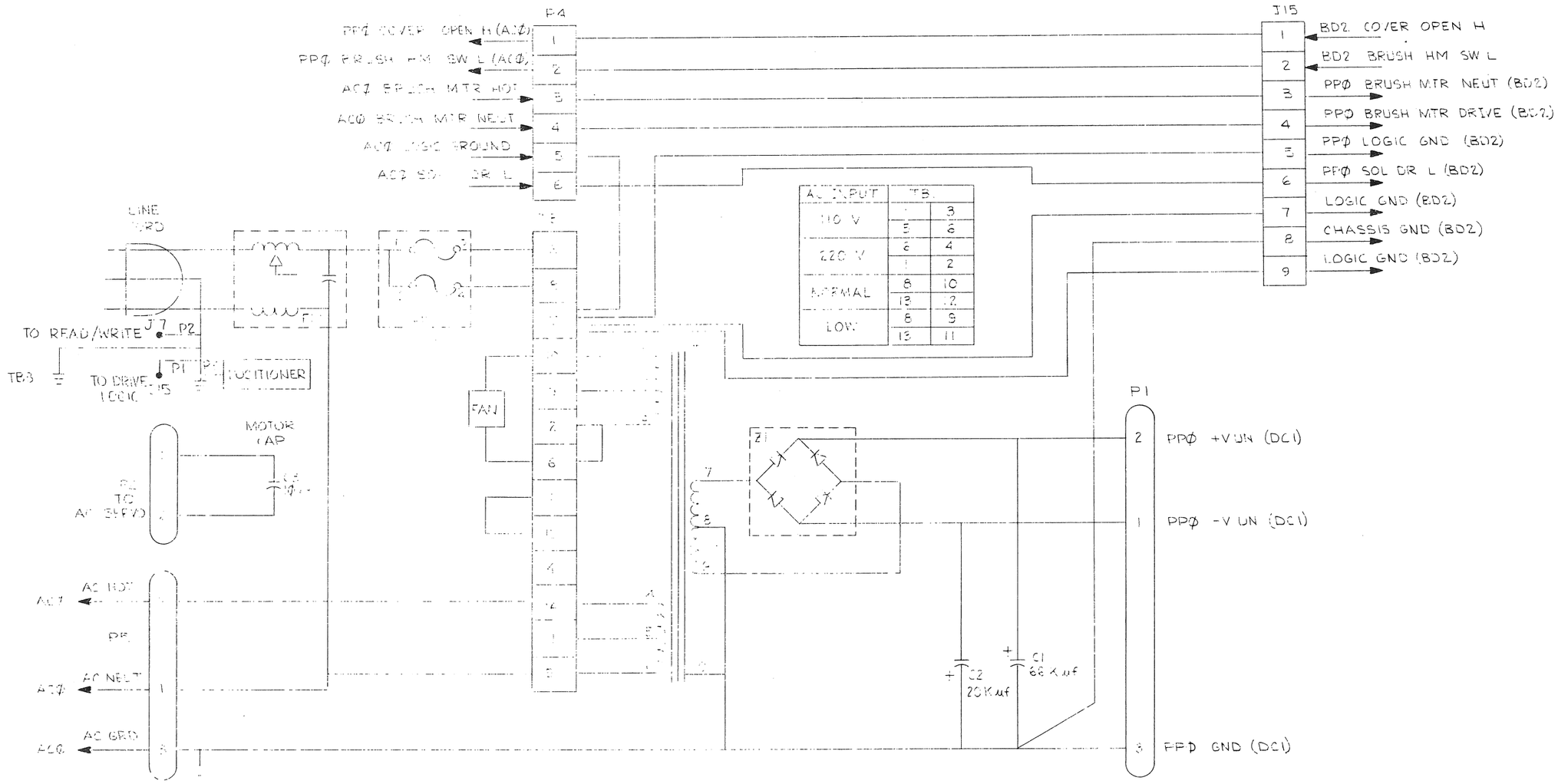

AC INPUT	TB
110 V	1 3
	5 6
220 V	6 4
	1 2
NORMAL	8 10
	13 12
LOW	8 9
	13 11

REVISIONS		
LTR	CHANGE NO.	DATE

TITLE	SIZE	CODE	NUMBER	REV.
POWER PANEL ASSY (PPO)	D	AD	7012130-0-0	R
SCALE: 1/1	SHEET 3 OF 3	DIST.		

NOTES:

1. [illegible] FREELY, WHEN ASSEMBLY IS [illegible] (FIG LH) A [illegible]
2. [illegible] (REF) BOND [illegible] TO COVER [illegible]
3. [illegible] TERNAL [illegible] OF BRACKET [illegible] TO OCCUR AT EITHER OF THE TWO [illegible] CRANK [illegible] (REF. 9).
4. [illegible] PAS 3 1 4 OF [illegible] TO PINS [illegible]
5. [illegible] AND REVISION [illegible]

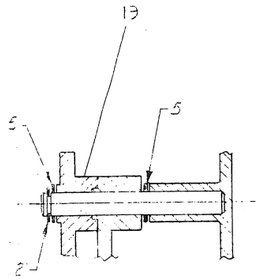

SECTION B-B

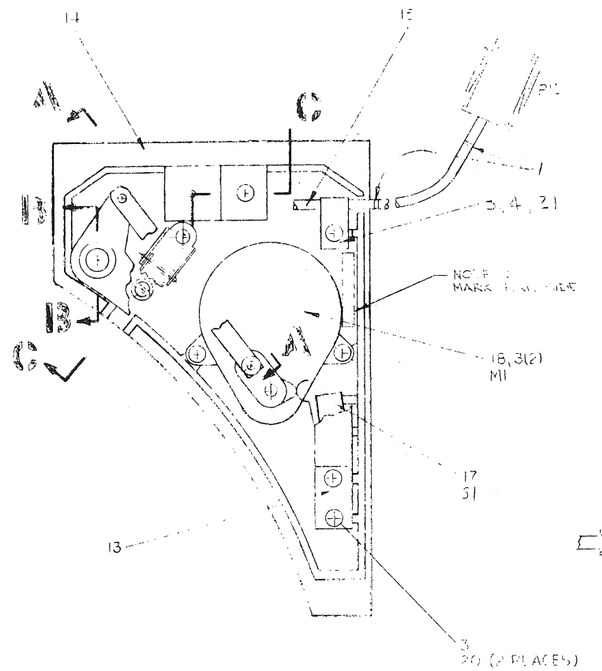

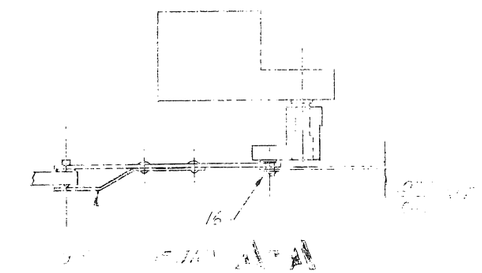

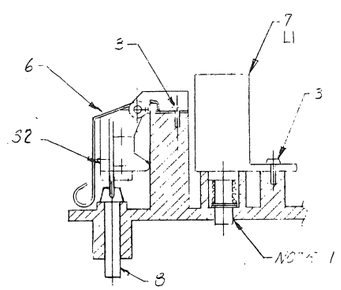

SECTION C-C

CAUTION: OFF SHEET PARTS LIST EXISTS.
SEE K-PL-7012112-0-DBP (Z0917)

REV.	CHANGE NO.	CHK	REVISIONS
A	RELEASED AT A PREVIOUS REV XCC		
B	[illegible]		
C	7012112-CX002 [illegible]		
D	7012112-CZ003 K. GUENZEL		
E	7012112-CZ004 KURT GUENZEL		
F	7012112-CZ005 KURT GUENZEL		
H	7012112-CX006 7012112-CX006A K. GUENZEL		

DESCRIPTION	DWG/PART NO.	ITEM NO.

UNLESS OTHERWISE SPECIFIED DIMENSIONS ARE IN INCHES

ANGLES ±0° 30'	CLASS OF ACCURACY (CHECK ONE)	NOMINAL DIMENSION RANGE INCHES					
		OVER 0 TO 0.2	OVER 0.2 TO 1.2	OVER 1.2 TO 4.0	OVER 4.0 TO 12.0	OVER 12.0 TO 40.0	OVER 40.0 TO 30.0
SURFACE QUALITY IN MICROINCHES	MEDIUM ☐	±.004	±.008	±.012	±.018	±.024	±.04
	PREFERRED ☐	±.012	±.016	±.025	±.04	±.063	±0.1

QUANTITY & VARIATION

THIRD ANGLE PROJECTION

REMOVE BURRS AND BREAK SHARP CORNERS

DO NOT SCALE DWG

MATERIAL: SEE PARTS LIST

FINISH

DRN.
CHK'D
ENG.
PROJ. ENG.
PROD.
NEXT HIGHER ASSY.
SCALE 1/1
SHEET 1 OF 3

FIRST USED ON RL4

digital

TITLE: BRUSH DRIVE ASSEMBLY

SIZE D | CODE AD | NUMBER 7012112-C-0 | REV. H

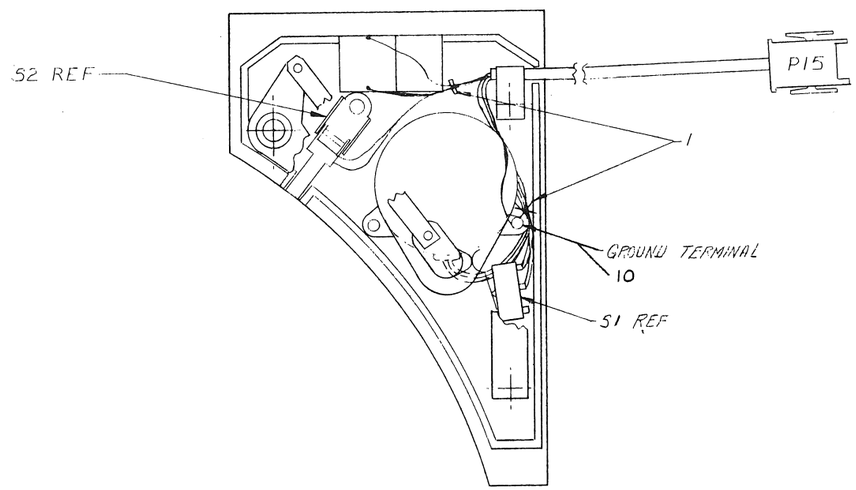

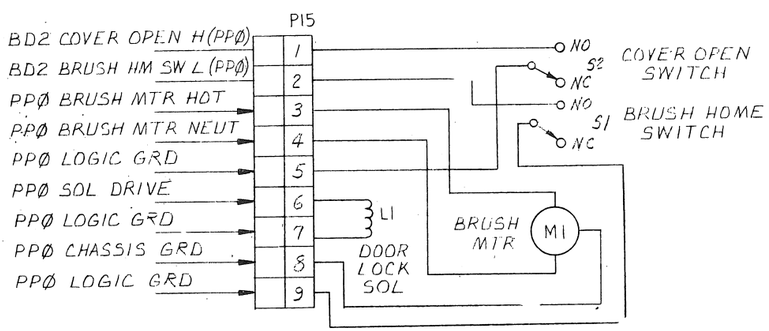

CIRCUIT SCHEMATIC

REVISIONS		
CHK	CHANGE NO.	REV.

TITLE	SIZE	CODE	NUMBER	REV.
BRUSH DRIVE ASSEMBLY (BD2)	D	AD	7012112-0-0	A
SCALE 1/1	SHEET 2 OF 2	DIST.		

COMPONENT SIDE VIEW

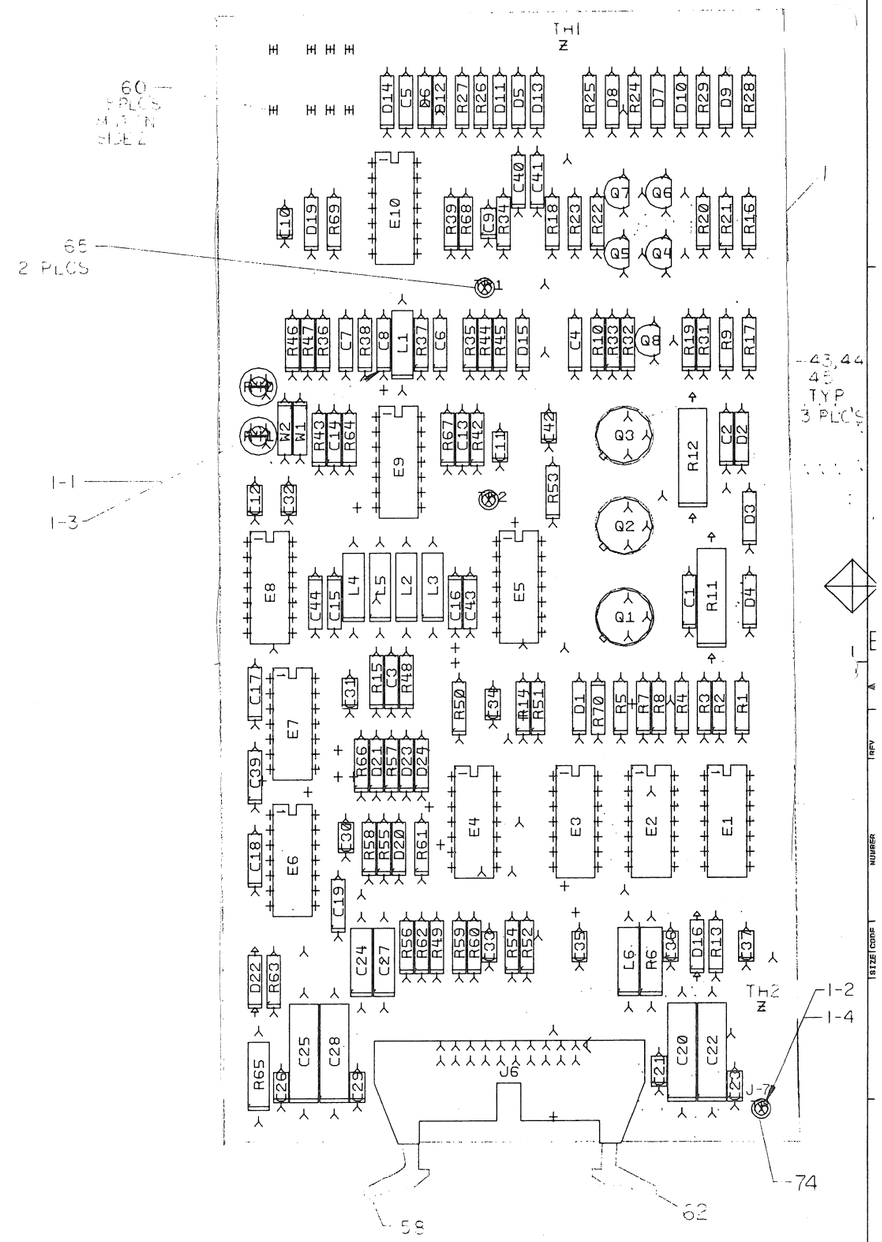

NOTES:

CHK	CHANGE NO	REV
	5413536-CX001 M.ZARICH	B

ETCH REV. B
P.C. DESIGN DATA BASE REV. BL

SIGNATURES	DATE
DRN.	
CHK'D.	
ENG.	
PROJ. ENG.	
PROD.	

SCALE 2/1
SHT. 1 OF 2
NEXT HIGHER ASSY. B-DD-5413536-0

digital

TITLE RL02 READ/WRITE BOARD

SIZE	CODE	NUMBER	REV
D	UA	5413536-0-0	B

AUTOMATED BY PRTLST.2E(3) — P A R T S L I S T — SHEET A1 OF A2

LINE	ITEM	DOCUMENT NUMBER	PART NUMBER	DESCRIPTION	QTY PER VARIATION *00	REFERENCE DESIGNATOR
1	1	D-MD-5013535-0-0	5013535-00	ETCHED CIRCUIT BD	1	
2	2		1001610-00	.01 MFD 50V -20+80 Z5U AXIAL	17	C9-C12,C21,C23,C26,C29-C37,C42
3	3		1005306-00	6.8MFD 35V 10% S.TANT	4	C20,C22,C25,C28
4	4		1013466-14	82.0 MMF 50V 5% CER	2	C16,C43
5	5		1013466-06	100.0 MMF 50V 5% CER,	1	C8
6	6		1013466-05	56.0 MMF 50V 5% CER,	1	C5
7	7		1013466-07	220.0 MMF 50V 5% CER,	5	C1,C2,C4,C17,C39
8	8		1013466-09	1000.0 MMF 50V 10% CER,	1	C18
9	9		1013466-11	.22 MFD 50V +80/-20% CER,	2	C24,C27
10	10		1013466-15	1200.0 MMF 50V 5% CER,	3	C19,C40,C41
11	11		1109943-00	1N 4733A VZ= 5.1 5% 1W Y	2	D16,D22
12	12		1113953-00	1N 5523D VZ= 5.1 1%	1	D1
13	13		1100122-00	1N 748A VZ= 3.9 5%	1	D19
14	14		1111577-00	1N 4454 TR= 4NS PIV= 50 S	11	D5-D10,D15,D20,D21,D23,D24
15	15		1300250-00	150.0 .25 W 5.0 % CC	1	R5
16	16		1300229-00	100.0 .25 W 5.0 % CC	5	R39,R52,R54,R59,R69
17	17		1300232-00	100.0 1.0 W 5.0 % CC	2	R11,R12
18	18		1300247-00	120.0 .25 W 5.0 % CC	1	R56
19	19		1300365-00	1.0 K .25 W 5.0 % CC	8	R13,R14,R35,R36,R48,R49,R66,R70
20	20		1300444-00	3.90 K .25 W 5.0 % CC	1	R46
21	21		1300447-00	4.70 K .25 W 5.0 % CC	3	R9,R10,R32
22	22		1301775-00	820.0 .25 W 5.0 % CC	1	R31
23	23		1301317-00	10.0 .25 W 5.0 % CC	1	R63
24	24		1302612-00	1.78 K 1/4W 1% RN55D-F 100PPM	2	R50,R51
25	25		1300195-00	33.0 .50 W 5.0 % CC	2	R6,R65
26	26		1304725-00	300 1/4W 1% RN55D-F 100PPM	1	R62
27	27		1312930-00	5.10 K .25 W 5.0 % CC	2	R55,R58
28	28		1301424-00	680.0 .25 W 5.0 % CC	4	R16,R18,R21,R23
29	29		1302391-00	20.0 K .25 W 5.0 % CC	1	R60
30	30		1300426-00	2.70 K .25 W 5.0 % CC	1	R33

REVISION HISTORY			BASIC PART NO: 13536			
ENG	ECO NUMBER	REV	SECTION A OF A	DRN: JERRY BEST	DATE: 14-AUG-78	D I I G I T A L
---	INIT	A	SECTION.VARIATION INDEX	CHK'D: L. ROOHR	DATE: 14-AUG-78	TITLE PARTS LIST
MZ	5413536-CX001	B	[A] 00			READ/WRITE BOARD
	M. ZARICH W.C.M. 17 JAN 80		[B]			
			[C]	DES.ENG: B. NOGUCHI	DATE:	
			[D]			
			[E]			DOCUMENT NUMBER
			[F]	RESP.ENG.: B. NOGUCHI	DATE: 14-AUG-78	
			[H]			SIZE CODE NUMBER REV
			[J]			
			[K]	MFG.ENG.: P. CHURCH	DATE:	K PL 5413536-0-DBP B
			[L]			
			[M]	ASSEMBLY NUMBER:	TOP DOCUMENT NUMBER:	FILE NAME: EDIT #
			[N]	D-UA-5413536-0-0	RL02	Z1091B.PLS 7

AUTOMATED BY PRTLST.2E(3) — P A R T S L I S T — SHEET A2 OF A2

LINE	ITEM	DOCUMENT NUMBER	PART NUMBER	DESCRIPTION	QTY PER VARIATION *00	REFERENCE DESIGNATOR
31	31		1302956-00	196 1/4W 1% RN55D-F 100PPM	3	R2,R3,R4
32	32		1300439-00	3.30 K .25 W 5.0 % CC	2	R20,R22
33	33		1305143-00	825 1/4W 1% RN55D-F 100PPM	2	R44,R45
34	34		1303303-00	2.61 K 1/4W 1% RN55D-F 100PPM	4	R24,R25,R28,R29
35	35		1302645-00	1.1 K 1/4W 1% RN55D-F 100PPM	1	R61
36	36		1301477-00	82.0 .25 W 5.0 % CC	1	R68
37	37		1301322-00	180.0 .25 W 5.0 % CC	2	R37,R38
38	38		1313469-00	240.0 .25 W 5.0 % CC	1	R34
39	39		1303045-00	3.16 K 1/4W 1% RN55D-F 100PPM	2	R26,R27
40	40		1501913-00	2N 2904A PNP 600MW SI 60 40 Y	3	Q1-Q3
41	41		1513489-00	2N 4401 NPN 350MW SI 40 20	3	Q6-Q8
42	42		1513490-00	2N 4403 PNP 350MW SI-40 30	2	Q4,Q5
43	43		1210001-00	HEAT SINK BLACK	3	
44	44		9007201-00	TRANSIPADS $10253	3	
45	45		9008268-00	COMPOUND, THERMAL JOINT $	A/R	
46	46		1611257-01	CHOKE(CERAMIC BEAD)AXIAL LEAD,ON	1	L6
47	47		1613898-01	33.0 UH INDUCTOR	4	L2-L5
48	48		1613898-02	39.0 UH INDUCTOR	1	L1
49	49		1910268-00	DEC 75107B RECEIVER,LINE,DUAL,	1	E8
50	50		1909686-00	7404 INVERTER GATE-HEX 1I	1	E3
51	51		1910544-00	74S74 FF-D DUAL,EDGE TRIGG	1	E2
52	52		1910644-00	733 DIFFERENTIAL AMP,WID	2	E9,E10
53	53		1910741-00	7406 INVERTER GATE-HEX 1I	1	E7
54	54		1911521-00	7432 OR GATE-QUAD 2IN, PO	1	E1
55	55		1910268-01	DEC 75107B-01 RECEIVER,LINE,DUA	2	E5,E4
56	56		1910725-00	75108B RECEIVER,LINE,DUAL,	1	E6
57	57		1209941-06	HEADER,100 20POS RT ANGLE	1	J6
58	58		1209941-03	HEADER RT ANGLE LEFT L	1	
59	59		1209941-04	HEADER RT ANGLE,RIGHT	1	
60	60		1210385-01	PIN 1POS WIRE WRAP	8	
61	61		9007791-00	TERM PCB 2POS SOLDER,TURRET	2	TP1,TP2
62	62		1303067-00	422 1/4W 1% RN55D-F 100PPM	2	R42,R43
63	63		1300219-00	68.0 .25 W 5.0 % CC	4	R7,R8,R47,R57
64	64		1301423-00	6.80 K .25 W 5.0 % CC	3	R15,R64,R67
65	65		1300391-00	1.50 K .25 W 5.0 % CC	2	R17,R19
66	66		1114117-00	1N 4152 PIV=450 I=75M	3	D2-D4
67	67		1113003-00	IN 5282 PIV=55 I=500M DO35	4	D11-D14
68	68		1015573-01	5600.0 MMF 50V 5% CER, $	5	C3,C6,C7,C13,C14
69	69		1304857-00	237 1/4W 1% RN55D-F 100PPM	1	R1
70	70		1300309-00	390.0 .25 W 5.0 % CC	1	R53
71	71		1013466-17	150 MMF 50V 5% CER	2	C15,C44
72	72		1309150-07	2 K 1/2W10% POT 100PPM	2	R40,R41
73	73		9009185-00	JUMPER, WIRE, INSULATED, BLACK B	2	W1,W2
74	74		1217377-00	TERM QUICK 1POS TAB PC MNT	1	J7

UNDERGOING CHANGE

D	I	I	G	I	T	A	L	TITLE	SECTION A OF A	SIZE	CODE	DOCUMENT NUMBER	REV
								READ/WRITE BOARD		K	PL	5413536-0-DBP	B

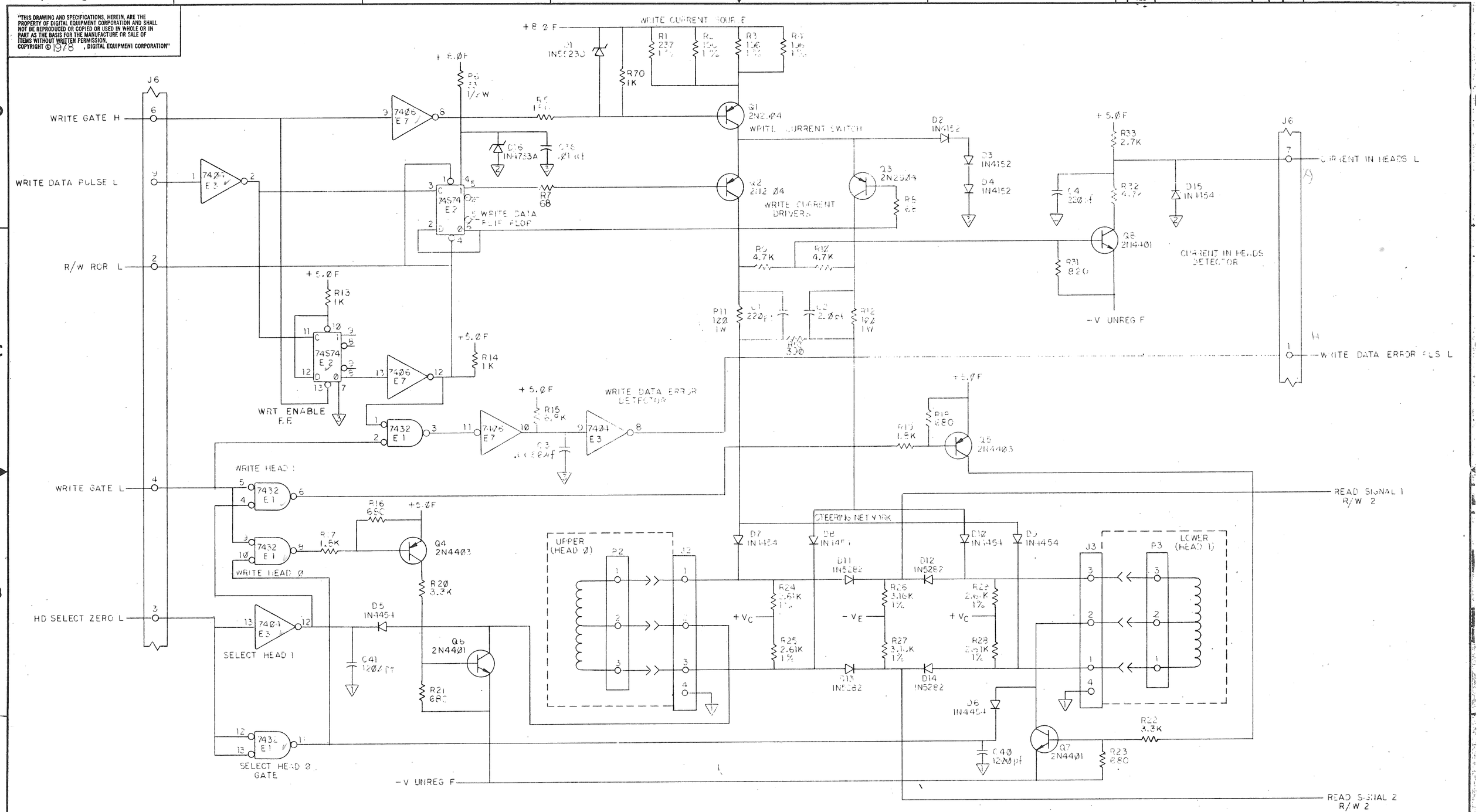

NOTE:
1. FOR RL01 CUT W2 AND LEAVE IN W1.
FOR RL02 CUT W1 AND LEAVE IN W2.

REVISIONS		
CHK	CHANGE NO.	REV.
	5413536-CX001 M.ZARICH	B
	M.ZARICH W.C.M.	

DRN. B. Nichols	4/3/78	FIRST USED ON RL02
CHK'D L. Rosh	5/5/78	digital
ENG. R. Zajac	5/8/78	TITLE READ/WRITE BOARD
PROJ. ENG.	5/8/78	
PROD. P. Schuder / P. Brennan	9/27/78	
NEXT HIGHER ASSY.		
SCALE —		SIZE D · CODE CS · NUMBER 5413536-Ø-1 · REV. B
SHEET 1 OF 2		DIST.

DEC FORM NO. 2089-102-0

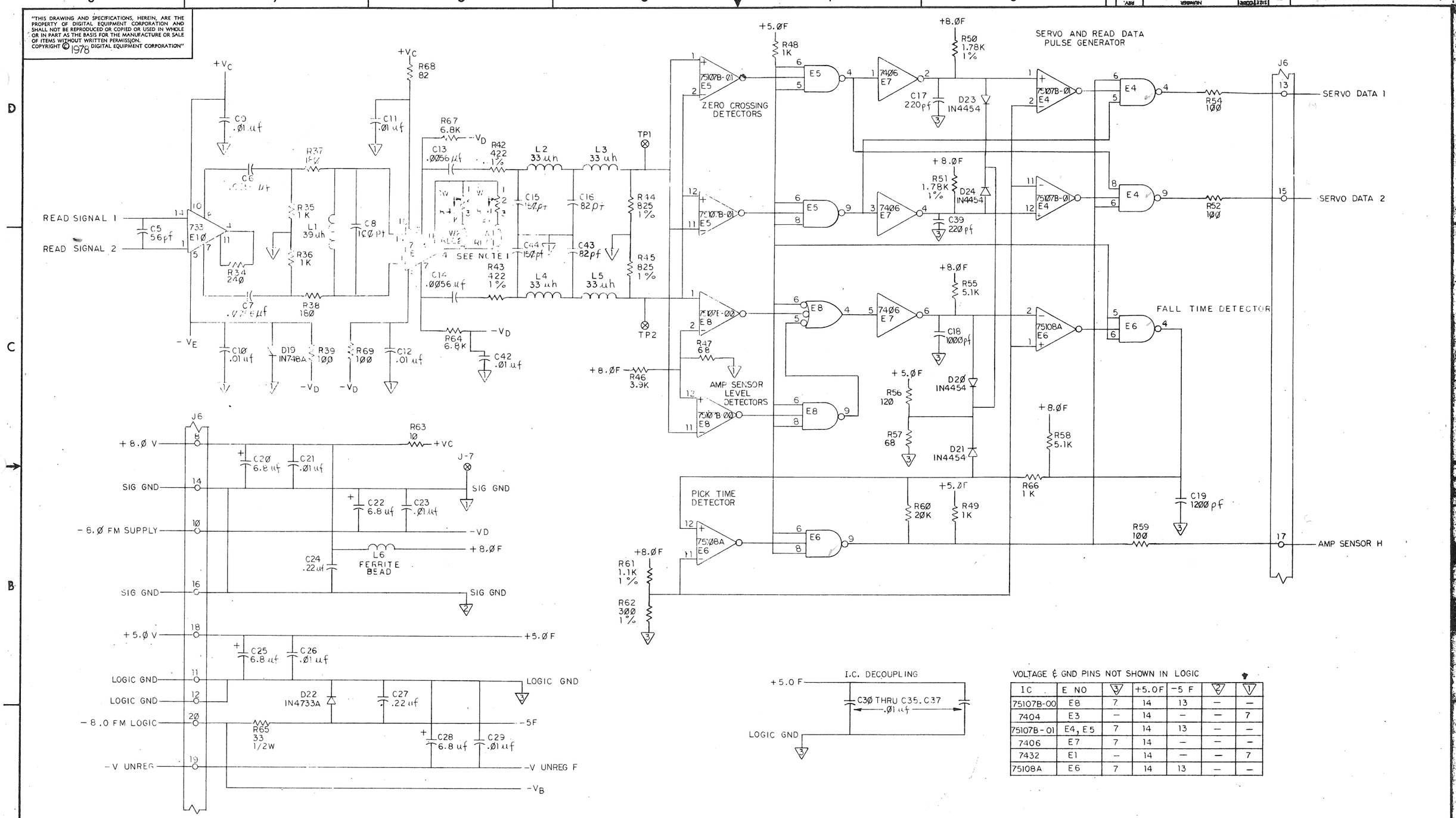

VOLTAGE & GND PINS NOT SHOWN IN LOGIC

IC	E NO	3	+5.0F	-5 F	2	1
75107B-00	E8	7	14	13	—	—
7404	E3	—	14	—	—	7
75107B-01	E4, E5	7	14	13	—	—
7406	E7	7	14	—	—	—
7432	E1	—	14	—	—	7
75108A	E6	7	14	13	—	—

REVISIONS		
CHK	CHANGE NO.	REV.

TITLE	SIZE	CODE	NUMBER	REV.
READ/WRITE BOARD	D	CS	5413536-0-1	B
SCALE — / — / — SHEET 2 OF 2	DIST.			

COMPONENT SIDE VIEW

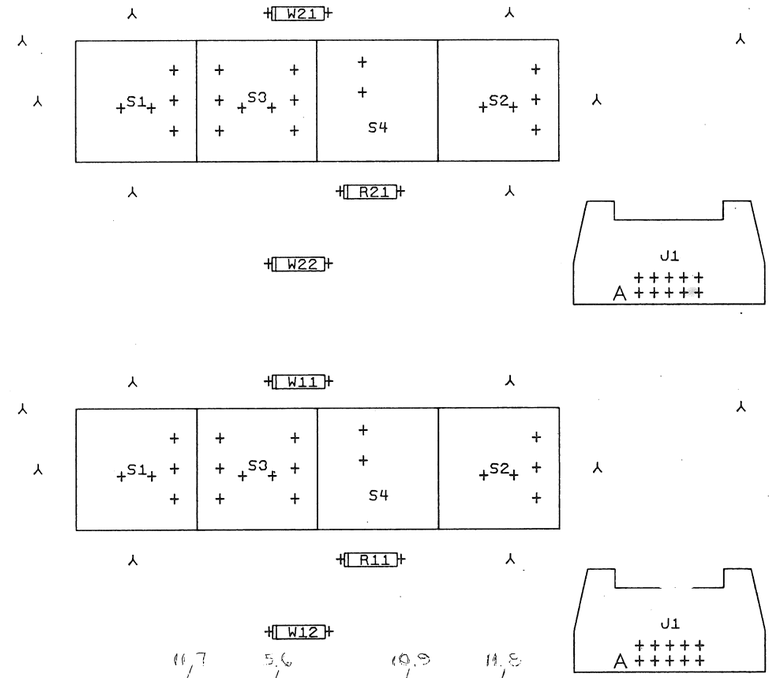

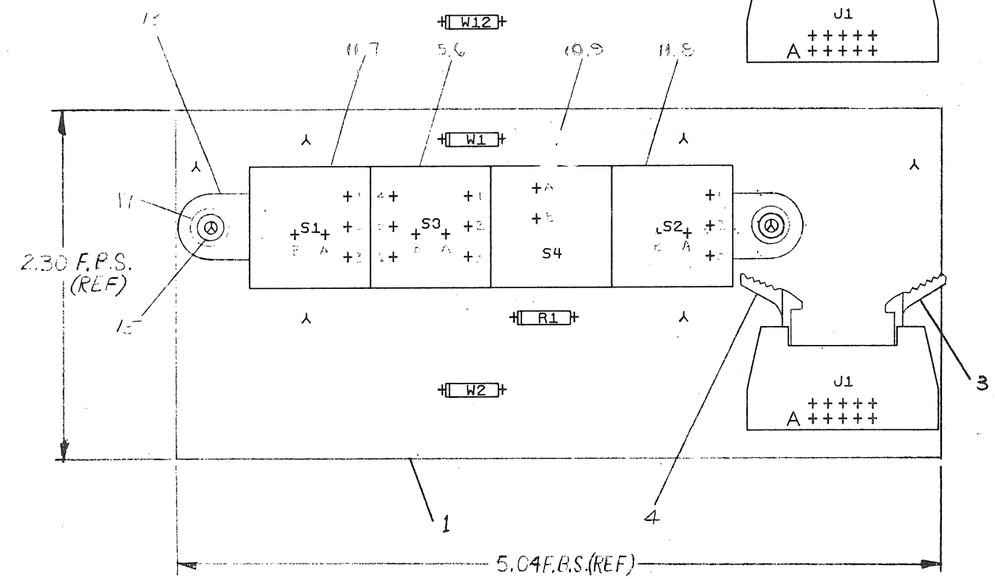

NOTES:

1. ALL MANUFACTURING INFORMATION, DATE CODE, CIRCUIT SCHEMATIC REV, QUALITY CONTROL STAMPS, ETC. ARE TO BE STAMPED ON ETCH SIDE (SIDE 2) OF MODULE.

CHK	CHANGE NO	REV
		E
	5411346-0001	
		E

ETCH REV. D
P.C. DESIGN DATA BASE REV. D

SIGNATURES	DATE
DRN. M. Riley	11/5/76
CHK'D.	1-11-77
ENG.	
PROJ.ENG.	3/14/77
PROD.	
SCALE 2/1	
SHT. 1 OF 2	
NEXT HIGHER ASSY. B-DD-5411846-0	

digital

TITLE FRONT PANEL

SIZE	CODE	NUMBER	REV
D	UA	5411846-0-0	E

MS#

DIGITAL EQUIPMENT CORPORATION
PARTS LIST

MADE BY S. MARLOW DATE 7 MAR 76	CHECKED P. BURNELL DATE 10 JAN 77	SECTION	
ENG G. REICHENBERG DATE 7 MAR 77	PROD L. KIRK DATE 9 MAR 77	ISSUED SECTION	

NOTES:

ITEM NO.	DRAWING NO.	PART NO.	DESCRIPTION	QUANTITY / VARIATION 5411846-0-0	REF DESIGNATION
1	D-MD-5011845-0-0	5011845	ETCH BOARD	1	
2		1209941-05	CONN., 10 PIN BERG	1	J1
3		1209941-04	CONN., LATCH-LEFT	1	
4		1209941-03	CONN., LATCH-RIGHT	1	
5		1212690-02	SWITCH, UNIT SELECT	1	S3
6		1212691-00	SWITCH CAP., DRIVE SELECT UNIT 0	1	S3
7		1212714-05	SWITCH CAP., LOAD	1	S1
8		1212714-01	SWITCH CAP., WRITE PROTECT	1	S2
9		1212714-02	SWITCH CAP., FAULT	1	S4
10		1212715-02	INDICATOR, FAULT DISPLAY	1	S4
11		1212717-05	SWITCH, PB	2	S1, S2
12		1212716-01	BULB, 14V	1	
13		1213188-01	SWITCH MOUNTING BRACKET, 4 POS.	1	
14		1300365	RES., 1K, ¼W, 5%	1	R1
15		9006732	EYELET, GS4-7	2	
16		9107560-01	BUS WIRE, JUMPER	2	W1, W2
17		9006655	WASHER	2	

E.C.O. NO.	
5411846-C2SP5 FEB 79	5411846-C2SP4 21-MAR-79 W.C.M.

TITLE	ASSY NO.	SIZE	CODE	NUMBER	REV.
FRONT PANEL	D-UA-5411846-0-0	B	PL	5411846-0-0	H
	SHEET 1 OF 1	INSERTION PARTS LIST DATA BASE REV			

DRB 125

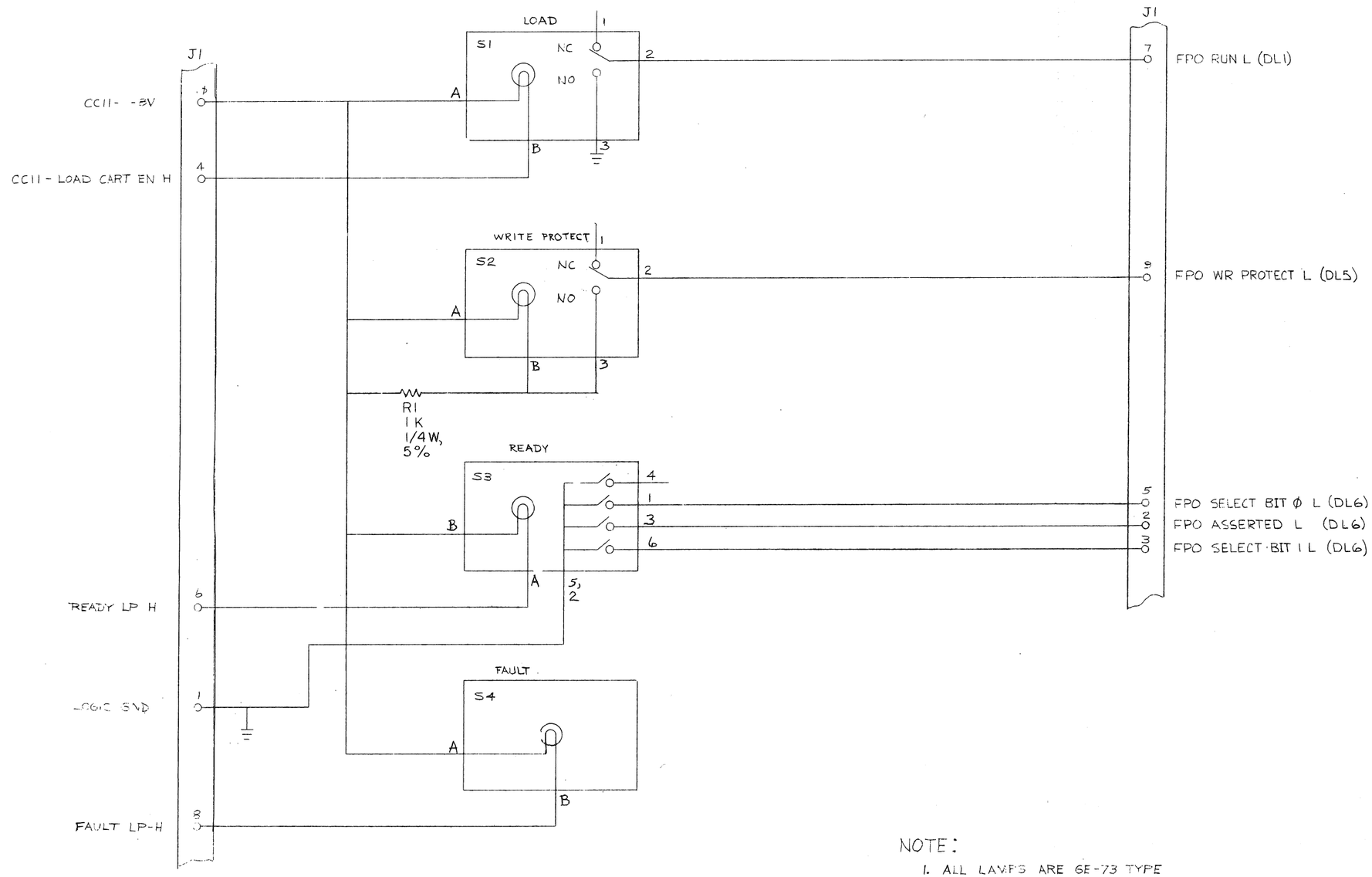

NOTE:
1. ALL LAMPS ARE GE-73 TYPE

REVISIONS			
CHK	CHANGE NO.	REV.	
G.B.	5411846-0001	E	G. REICHENBERG 7-26-77
	5411846-C2002	F	G. REICHENBERG 7-26-77
	5411846-C2003	H	M. ZARICH 3-8-78

DRN.		27-Feb-76
CHK'D		1-11-77
ENG.		3-7-77
PROJ. ENG.		3-10-77
PROD.		3-9-77
NEXT HIGHER ASSY.		
SCALE		
SHEET	1 OF 1	

FIRST USED ON

digital

TITLE
FRONT PANEL

SIZE	CODE	NUMBER	REV.
D	CS	5411846-0-1	H

DIST.

DEC FORM NO. 1485-102-D

COMPONENT SIDE VIEW

ACTUAL REF DESIGNATOR	SUPERFICIAL REF DESIGNATORS
C1,C2,C3,C4,C5,C6,C7	C101,C102,C103,C104,C105,C106,C107
D1,D2,D3,D4,D5,D6,D7,D8,D9,D10 D11,D12,D13	D101,D102,D103,D104,D105,D106,D107,D108,D109,D110,D111,D112, D113
E1,E2,E3	E101,E102,E103
K1,K2,K3	K101,K102,K103
J1,J2,J3,J4,J5	J101,J102,J103,J104,J105
Q1,Q2,Q3,Q4,Q5,Q6	Q101,Q102,Q103,Q104,Q105,Q106
R1,R2,R3,R4,R5,R6,R7,R8,R9,R10 R11,R12,R13,R14,R15,R16,R17,R18,R19, R20,R21,R22	R101,R102,R103,R104,R105,R106,R107,R108,R109,R110,R111,R112, R113,R114,R115,R116,R117,R118,R119,R120,R121,R122

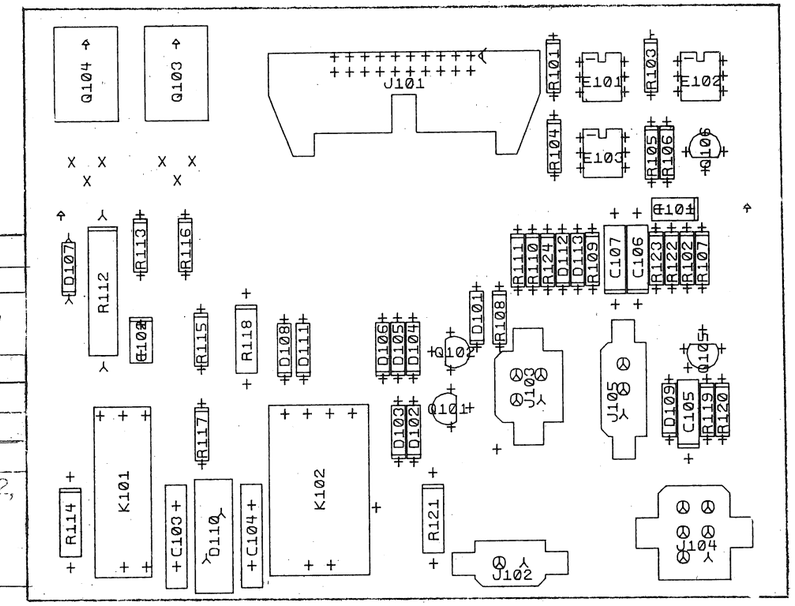

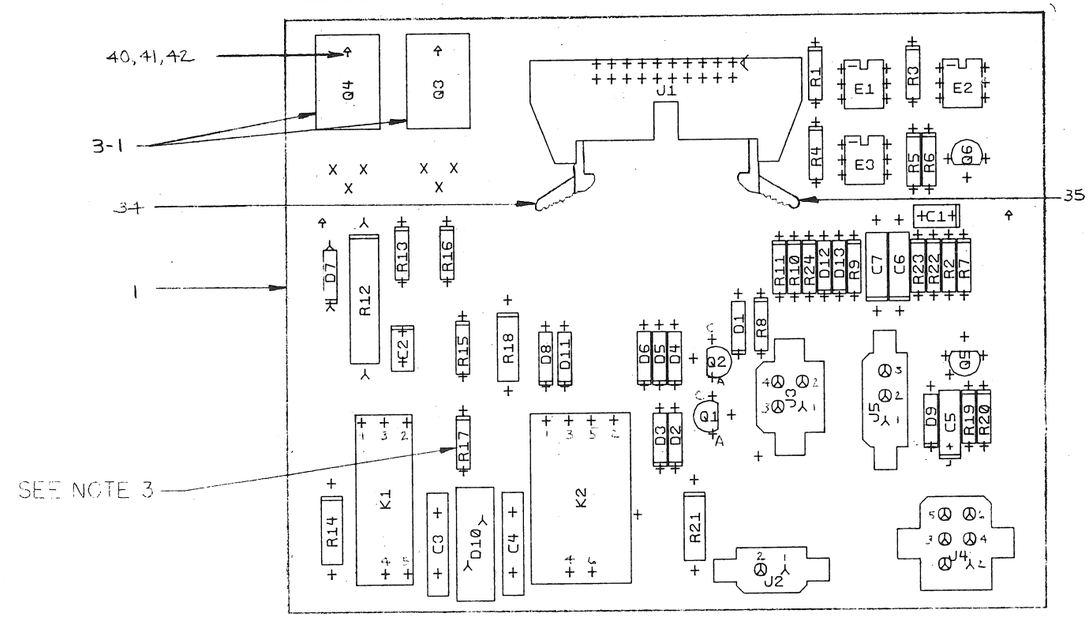

NOTES:
1. 8 HOLES .0465 [+.000-.0045] MAYNARD ONLY
2. U/L APPROVAL REQUIRED
3. REWORK INSTRUCTIONS:
   1. REMOVE R17 (330Ω, 1/4W, 5%)
   2. INSTALL R17 (330Ω 1/2W, 5%)

CHK	CHANGE NO	REV
	5411848-0001 P. BURNELL	A
	G. FEUGENBERG 5411848-0X0001 P. BURNELL	E
	5411848-C20003 16 Apr M. ZARICH	F

ETCH REV.
P.C. DESIGN DATA BASE REV.

SIGNATURES	DATE
DRN.	
CHK'D.	
ENG.	26 Sept 77
PROJ.ENG.	26 Sept 77
PROD.	26 Sept 77
SCALE 2/1	
SHT. 1 OF 4	
NEXT HIGHER ASSY. 8-DD-5411848-0	

digital

TITLE AC SERVO

SIZE	CODE	NUMBER	REV
D	UA	5411848-0-0	F

MS#260235

AUTOMATED BY PRTLST.3K(27) P A R T S L I S T SHEET A1 OF A2

LINE	ITEM	DOCUMENT NUMBER	PART NUMBER	DESCRIPTION	QTY PER VARIATION 00	REFERENCE DESIGNATOR
1	1	D-MD-5011847-0-0	5011847-00	ETCH CRKT BRD	1	
2	2		1011683-00	.022 MFD 50V 1\. 67 CER.	1	C1
3	3		1012312-01	.47 MFD 50V X%	1	C2
4	4		1013682-00	.1 MFD 500V +80 -20% CER.	2	C3,C4
5	5		1001776-00	1 MFD 35V 10% S.TANT	2	C5,C7
6	6		1110856-00	1N 970B VZ= 24.0 5% .40W Y	1	D1
7	7		1111577-00	1N 4454 TR= 4NS PIV= 50 S	10	D2-D6,D8,D9,D11-D13
8	8		1105796-00	1N 4004 PIV=400 I= 1A D041 SP	1	D7
9	9		1510727-01	OPTO COUPLED ISOLATOR	3	E1-E3
10	10		1213917-00	RLY,REED 5V COIL,DPDT	1	K2
11	11		1213915-00	RLY,REED, 5V COIL,SPDT	1	K1
12	12		1110997-00	VP 130A10 VOLT. SUPRESS.130VAC	1	D10
13	13		1209941-06	HEADER.100 20POS RT ANGLE	1	J1
14	14		1213922-00	HEADER 2POS	1	J2
15	15		1213922-01	HEADER 3POS	1	J5
16	16		1213922-03	HEADER 4POS	1	J3
17	17		1213922-04	HEADER 6POS	1	J4
18	18		1300315-00	470 1/2W 5% CC	2	R14,R21
19	19		1300271-00	220 1/4W 5% CC	3	R1,R3,R4
20	20		1311220-00	5.1 1/2W 5% CC	1	R18
21	21		1301327-00	68 K 1/4W 5% CC	1	R6
22	22		1302466-00	100 K 1/4W 5% CC	2	R5,R8
23	23		1300444-00	3.9 K 1/4W 5% CC	1	R20
24	24		1314516-00	200 K 1/4W 5% CC	2	R7,R23
25	25		1300496-00	15 K 1/4W 5% CC	1	R10
26	26		1300479-00	10 K 1/4W 5% CC	2	R11,R24
27	27		1300482-00	10 K 2W 10% CC	1	R12
28	28		1312927-00	16 1/4W 5% CC	2	R15,R16
29	29		1314649-00	430 K 1/4W 5% CC	1	R22

REVISION HISTORY			BASIC PART NO: 5411848			
ENG	ECO NUMBER	REV	SECTION A OF A	DRN: H. RICHER	DATE: 23 MAR 76	TITLE PARTS LIST
	INITIAL	E	SECTION.VARIATION INDEX	CHK'D: P. BURNELL	DATE: 10 JAN 77	AC SERVO
MZ	5411848-CZ003	F	[A] 00			
			[B]			
			[C]	DES.ENG: P. BADUM	DATE: 7 JUN 77	
			[D]			
			[E]			DOCUMENT NUMBER
			[F]	RESP.ENG.: P. BADUM	DATE: 7 JUN 77	SIZE / CODE / NUMBER / REV
			[H]			
			[J]			
			[K]	MFG.ENG.: D. LESAGE	DATE: 7 JUN 77	K / PL / 5411848-0-DBP / F
			[L]			
			[M]	ASSEMBLY NUMBER:		FILE NAME: / EDIT #
			[N]	D-UA-5411848-0-0		Z0491.PLS / 3

AUTOMATED BY PRTLST.3K(27) P A R T S L I S T SHEET A2 OF A2

LINE	ITEM	DOCUMENT NUMBER	PART NUMBER	DESCRIPTION	QTY PER VARIATION 00	REFERENCE DESIGNATOR
30	30		1300296-00	330 1/2W 5% CC	1	R17
31	31		1302388-00	2 K 1/4W 5% CC	1	R13
32	32		1309595-00	1 M 1/4W 5% CC	1	R9
33	33		1303176-00	1.6 K 1/4W 5%	1	R19
34	34		1209941-03	HEADER RT ANGLE LEFT L	1	J1
35	35		1209941-04	HEADER RT ANGLE,RIGHT	1	J1
36	36		1510877-00	2N 6028 UJT 300MW R67B	2	Q1,Q6
37	37		1110968-00	2N 5062 SCR@100V I=.8A T092	1	Q2
38	38		1510070-00	TRIAC@400V,I> 8A #RCA40669 M	2	Q3,Q4
39	39		1513489-00	2N 4401 NPN 350MW SI 40 20	1	Q5
40	40		9006557-00	NUT,KEP , 4-40X 1/4 AF	2	Q3,Q4
41	41		9006010-01	SCREW,PAN ,PHIL, 4-40X 5/16	2	Q3,Q4
42	42		9006655-00	WASHER, FLAT, .312 O.D. X .125 I	2	Q3,Q4
43	43			*** THIS ITEM IS NOT USED ***	-	
44	44		1000002-04	.33 MFD 35V 10% .150D S.TA	1	C6
45	45		1314650-00	91 K 1/4W 5% CC	1	R2

D	I	G	I	T	A	L	TITLE	SECTION A OF A	SIZE	CODE	DOCUMENT NUMBER	REV
							AC SERVO		K	PL	5411848-0-DBP	F

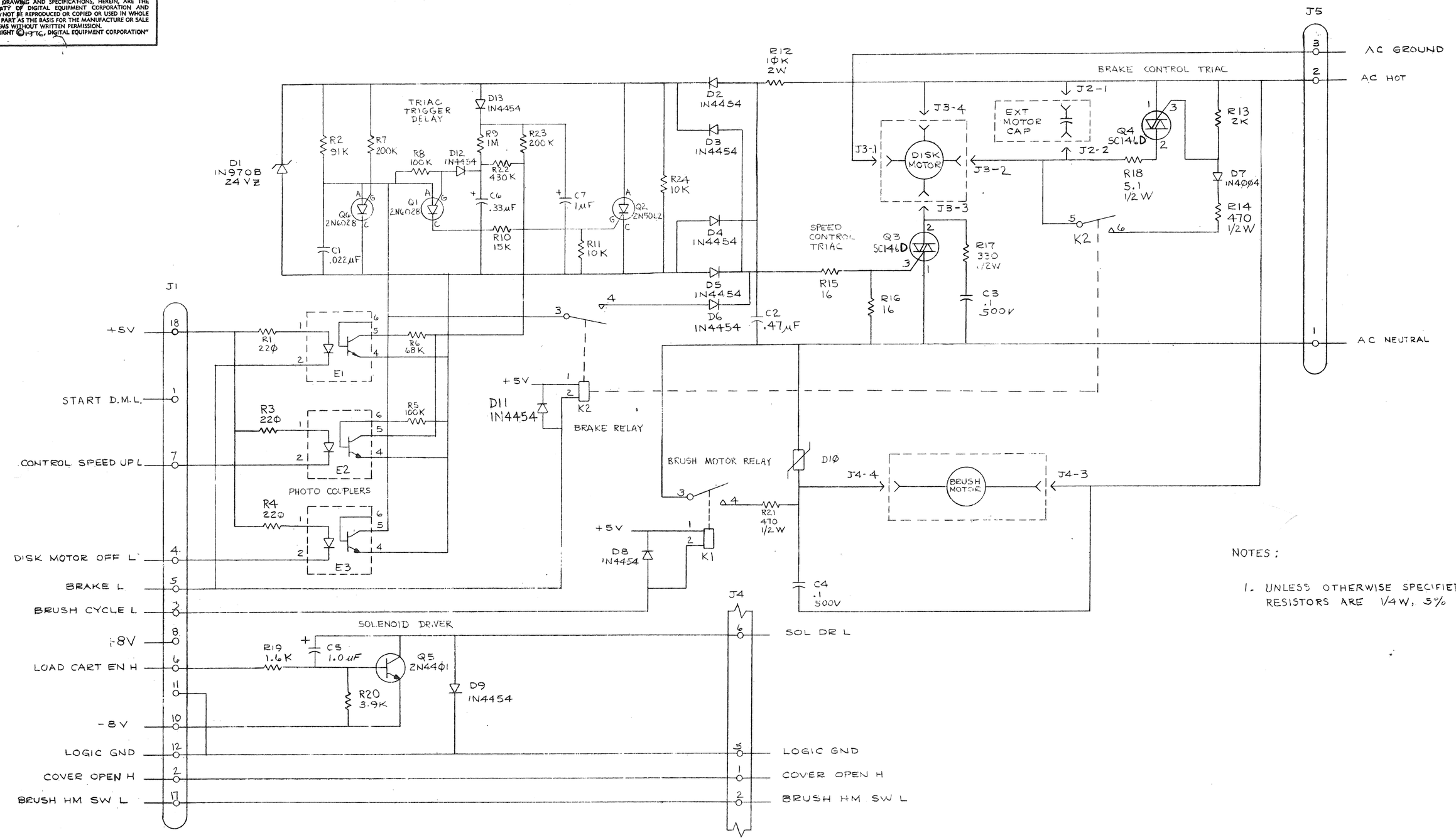

NOTES:

1. UNLESS OTHERWISE SPECIFIED: RESISTORS ARE 1/4W, 5%

REVISIONS				
REV.	CHANGE NO.			
U	RELEASED AT REV C. EQUAL TO C1 PLUS FIELD SERVICE MODIFICATION	5411848-0001	PHYLLIS BURNELL	D
		5411848-CX002	P. BURNELL	C
		5411848-CZ003	M. ZARICH	F

DRN.	3/16/76	FIRST USED ON RL01
CHK'D	1-14-77	digital
ENG.	6-8-77	TITLE AC SERVO
PROJ. ENG.	6/7/77	
PROD.	6/7/77	
NEXT HIGHER ASSY.	D-UA-5411848-0-0	SIZE D CODE CS NUMBER 5411848-0-1 REV. F
SCALE	—	
SHEET 1 OF 1		DIST.

COMPONENT SIDE VIEW

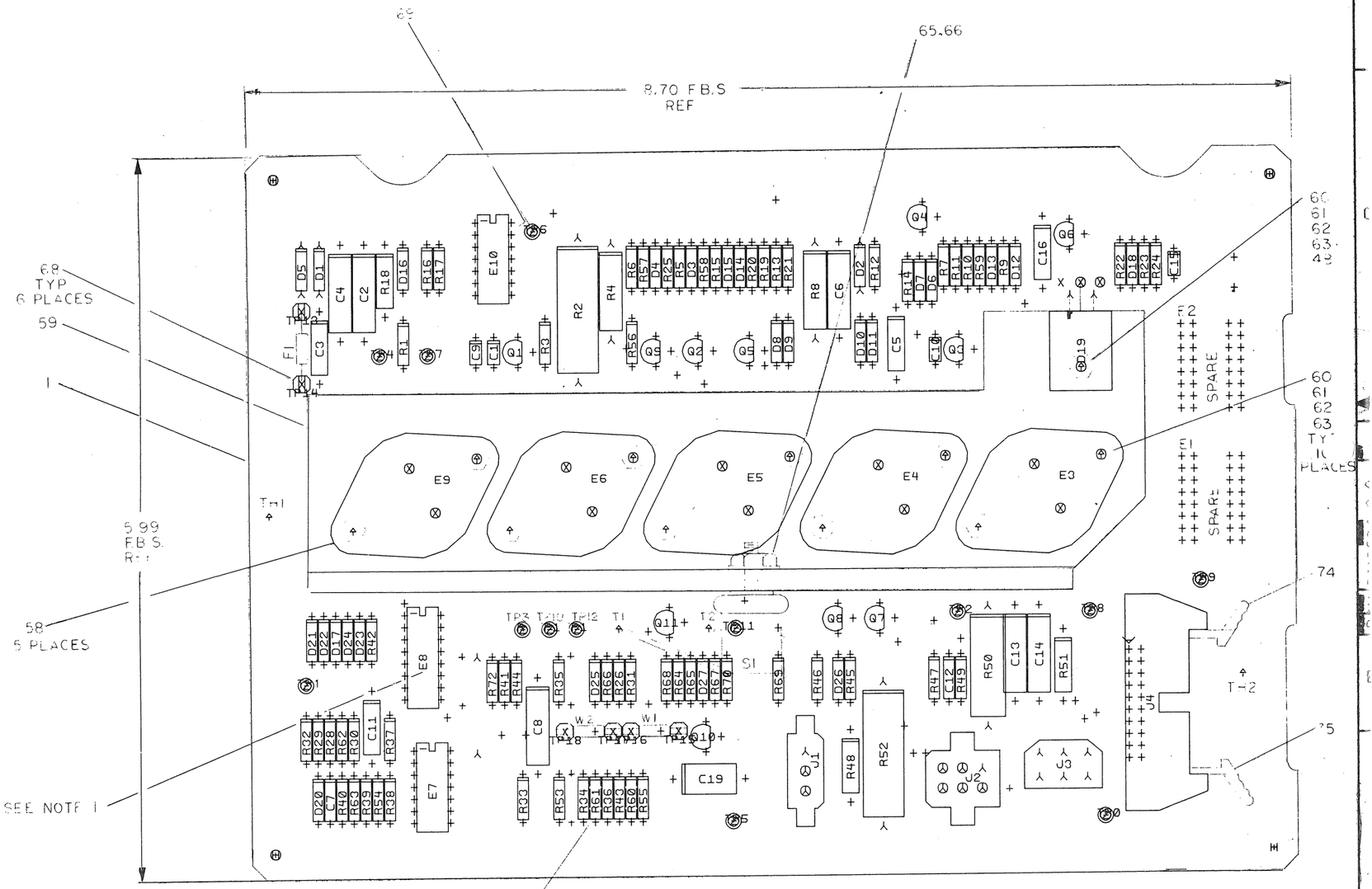

NOTES:

1. TP3, TP11, & TP12 ARE MOUNTED ON SIDE 2
2. R60 AND R61 ARE TO BE INSTALLED AFTER FINAL TEST.
3. INSTALL W1 AND W2 FOR RL01. INSTALL W2 ONLY FOR RL02.

CHK	CHANGE NO	REV
	5413337-00	B
	B08 NOV 81	

ETCH REV. B
P.C. DESIGN DATA BASE REV. H

SIGNATURES	DATE
DRN.	
CHK'D.	
ENG.	
PROJ. ENG.	
PROD.	
SCALE 2/1	
SHT. 1 OF 3	
NEXT HIGHER ASSY. B-DD-5413534-0	

digital

TITLE DC SERVO & POWER SUPPLY

SIZE	CODE	NUMBER	
D	U4	5413534-0-0	E

.1 MS#291-021

AUTOMATED BY PRTLST.2E(2)

P A R T S L I S T

LINE	ITEM	DOCUMENT NUMBER	PART NUMBER	DESCRIPTION	QTY PER VARIATION 00	REFERENCE DESIGNATOR
1	1	D-MD-5013533-0-0	5013533-00	ETCHED CIRCUIT BOARD	1	
2	2		1013466-08	680.0 MMF 50V 10% CER.	1	C12
3	3		1016009-00	2200 MMF 50V 5% CER.	1	C7
4	4		1001610-00	.01 MFD 50V -20+80 Z5U AXIAL	4	C1,C9,C10,C15
5	5		1002630-00	.015 MFD 100V 10% 663UW MYLR	1	C8
6	6		1013466-11	.22 MFD 50V +80/-20% CER.	4	C3,C5,C11,C16
7	7		1005306-00	6.8MFD 35V 10% S.TANT	4	C4,C6,C13,C14
8	8		1000076-00	39 MFD 10V 10% 150D S.TA	1	C2
9	9		1309422-00	5.1 1/4W 5% CC	1	R58
10	10		1312929-00	62 1/4W 5% CC	2	R3,R23
11	11		1311523-00	110 1/4W 5% CC	1	R22
12	12		1300247-00	120 1/4W 5% CC	1	R13
13	13		1300271-00	220 1/4W 5% CC	1	R59
14	14		1301425-00	300 1/4W 5% CC	1	R55
15	15		1303178-00	620 1/4W 5% CC	1	R6
16	16		1300365-00	1 K 1/4W 5% CC	5	R1,R7,R39,R44,R57
17	17		1300391-00	1.5 K 1/4W 5% CC	1	R5
18	18		1302388-00	2 K 1/4W 5% CC	2	R31,R43
19	19		1300426-00	2.7 K 1/4W 5% CC	2	R46,R47
20	20		1302389-00	4.3 K 1/4W 5% CC	1	R53
21	21		1300447-00	4.7 K 1/4W 5% CC	10	R10-R12,R14,R15,R19,R20,R24,R49,
					CONT	R68
22	22		1303179-00	8.2 K 1/4W 5% CC	3	R9,R16,R17
23	23		1300488-00	12 K 1/4W 5% CC	4	R25,R26,R45,R56
24	24		1305346-00	27 K 1/4W 5% CC	1	R21
25	25		1305131-00	*** THIS ITEM IS NOT USED ***	-	
26	26		1312923-00	2.10 K 1/4W 1% RN55D-F 100PPM	1	R41
27	27		1305114-00	3.48 K 1/4W 1% RN55D-F 100PPM	1	R34
28	28		1314763-00	4.12 K 1/4W 1% RN55D-F 100PPM	1	R36
29	29		1303312-00	10.0 K 1/4W 1% RN55D-F 100PPM	3	R28,R29,R62

REVISION HISTORY				
ENG	ECO NUMBER	REV		
BN	INIT 5413534-CZ001	A		
		B		

BASIC PART NO: 5413534

SECTION A OF A

SECTION.VARIATION INDEX 00
[A]
[B]
[C]
[D]
[E]
[F]
[H]
[J]
[K]
[L]
[M]
[N]

DRN: JERRY BEST
DATE: 26-JUL-78
CHK'D: JERRY BEST
DATE: 26-JUL-78
DES.ENG: R. NOGUCHI
DATE:
RESP.ENG.: R. NOGUCHI
DATE: 26-JUL-78
MFG.ENG.: P. CHURCH
DATE:
ASSEMBLY NUMBER: D-UA-5413534-0-0
TOP DOCUMENT NUMBER: RL02

D I G I T A L

TITLE: D.C. SERVO AND POWER SUPPLY PARTS LIST

DOCUMENT NUMBER: SIZE K, CODE PL, NUMBER 5413534-0-DBP, REV B

FILE NAME: Z0494B.PLS
EDIT # 13

AUTOMATED BY PRTLST.2E(2)

P A R T S L I S T

LINE	ITEM	DOCUMENT NUMBER	PART NUMBER	DESCRIPTION	QTY PER VARIATION 00	REFERENCE DESIGNATOR
30	30		1312924-00	10.7 K 1/4W 1% RN55D-F 100PPM	1	R32
31	31		1309412-00	18.2 K 1/4W 1% RN55D-F 100PPM	1	R33
32	32		1315436-00	52.3 K 1% RN55D-F 100PPM	1	R54
33	33		1304843-00	243 K 1/4W 1% RN55D-F 100PPM	1	R72
34	34		1315437-00	237 K 1% RN55D-F 100PPM	1	R38
35	35		1302378-00	51 1/2W 5% CC	1	R51
36	36		1300364-00	1 K 1/2W 5% CC	2	R18,R48
37	37		1314068-00	360 1W 5% CC	1	R4
38	38		1300368-00	1 K 1W 5% CC	1	R8
39	39		1301494-00	200 2W 5% CC	1	R50
40	40		1313358-00	.2 5W 3% WW	2	R2,R52
41	41		1105796-00	1N 4004 PIV=400 I= 1A D041 SP	3	D1,D2,D5
42	42		1113953-00	1N 5523D VZ= 5.1 1%	8	D4,D6,D8,D9,D16,D18,D21,D22
43	43		1109990-00	1N 757A VZ= 9.1 5% .40W P	2	D23,D24
44	44		1110994-00	1N 751A VZ= 5.1 5% .40W	1	D14
45	45		1114117-00	1N 4152 PIV=450 I=75M	6	D3,D7,D10,D11,D12,D13
46	46		1111577-00	1N 4454 TR= 4NS PIV= 50 S	6	D15,D17,D20,D25-D27
47	47		1513698-00	TRIAC@200V,I>14A	1	D19
48	48		9009597-00	INSULATOR, THERMA-FILM $	1	
49	49		1513489-00	2N 4401 NPN 350MW SI 40 20	4	Q2,Q4,Q8,Q9
50	50		1513490-00	2N 4403 PNP 350MW SI-40 30	6	Q1,Q3,Q5-Q7,Q11
51	51		1511282-00	MJ2500 PNP 150WC SI 60 5 1K 5A	2	E4,E6
52	52		1511349-00	TIP 640 (OR MJ3000) NPN DARLINGT	1	E3
53	53		1911706-00	5012 ANALOG SWITCH,4CHNL	1	E8
54	54		1912818-00	LS38 NAND BUFFER-QUAD 2IN	1	E10
55	55		1912107-01	324ANOP AMP,QUAD	1	E7
56	56		1913695-00	7808 VOLT.REG.FIX +	1	E9
57	57		1913694-00	7908 VOLT.REG.FIX -	1	E5
58	58		9008419-00	WASHER, FLAT, THERMAFILM .002THK	5	
59	59		7418595-00	HEATSINK ASSEMBLY	1	
60	60		9008033-01	SCREW,PAN ,PHIL, 4-40X 9/16	11	
61	61		9006557-00	NUT,KEP , 4-40X 1/4 AF	11	
62	62		9006655-00	WASHER, FLAT, .312 O.D. X .125 I	11	
63	63		9008268-00	COMPOUND, THERMAL JOINT $	A/R	
64	64		1210824-00	THERMOSTAT,O@215,C@156,SPST	1	S1
65	65		9008185-00	NUT,KEP , 6-32X1/4 AF	1	
66	66		9006653-00	WASHER, FLAT, .375 O.D. X .156 I	1	
67	67		1205747-00	FUSE, SUB-MINI, 5.000A, 125V, A	1	F1
68	68		9006735-00	EYELET, FUNNEL FLANGE, .059 OD X	6	TP13-TP18
69	69		9007791-00	TERM PCB 2POS SOLDER,TURRET	13	TP0-TP12
70	70		1213922-01	HEADER 3POS	1	J1
71	71		1213922-04	HEADER 6POS	1	J2
72	72		1213900-00	CONN,RCPT 6PIN	1	J3
73	73		1209941-06	HEADER,100 20POS RT ANGLE	1	J4
74	74		1209941-04	HEADER RT ANGLE,RIGHT	1	
75	75		1209941-03	HEADER RT ANGLE LEFT L	1	
76	76		1305324-00	4.99 K 1/4W 1% RN55D-F 100PPM	2	R37,R30
77	77		1300250-00	150 1/4W 5% CC	1	R42

D I G I T A L

TITLE: D.C. SERVO AND POWER SUPPLY

SECTION A OF A

SIZE K, CODE PL, DOCUMENT NUMBER 5413534-0-DBP, REV B

LINE	ITEM	DOCUMENT NUMBER	PART NUMBER	DESCRIPTION	QTY PER VARIATION 00	REFERENCE DESIGNATOR
78	78		1312618-00	16.9 K 1/4W 1% RN55D-F 100PPM	1	R40
79	79		1300229-00	100 1/4W 5% CC	1	R63
80	80		1305336-00	*** THIS ITEM IS NOT USED ***	-	
81	81		1309416-00	31.6 K 1/4W 1% RN55D-F 100PPM	1	R65
82	82		1015574-01	*** THIS ITEM IS NOT USED ***	-	
83	83		9009185-00	JUMPER, WIRE, INSULATED, BLACK B	2	W1,W2
84	84		1303044-00	100 K 1/4W 1% RN55D-F 100PPM	1	R64
85	85		1015574-00	*** THIS ITEM IS NOT USED ***	-	
86	86		1315435-00	25.5 K 1/4W 1% RN55D-F 100PPM	1	R66
87	87		1312930-00	5.1 K 1/4W 5% CC	1	R67
88	88		1015520-00	1 MFD 100V 5% M.POLYESTER	1	C19
89	89		1513697-00	2N 5640 FET N CHNNL	1	Q10
90	90		1300479-00	10 K 1/4W 5% CC	1	R69
91	91		1302466-00	100 K 1/4W 5% CC	1	R70

D	I	G	I	T	A	L	TITLE	SECTION A OF A	SIZE	CODE	DOCUMENT NUMBER	REV
							D.C. SERVO AND POWER SUPPLY		K	PL	5413534-0-DBP	B

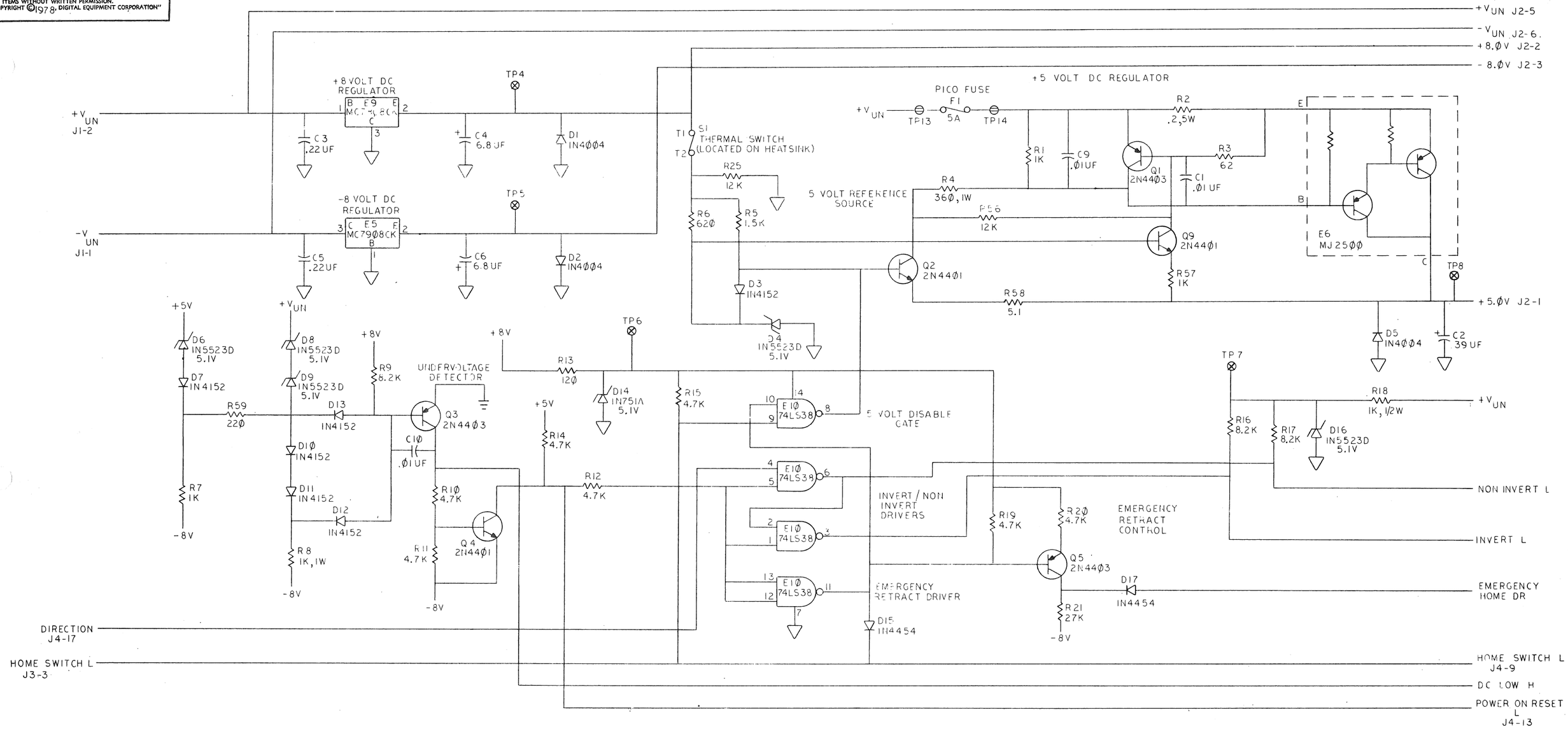

NOTES:

1. ALL RESISTORS TO BE 1/4W, 5%; UNLESS OTHERWISE SPECIFIED.
2. E1 AND E2 ARE SPARES.
3. VALUE OF R6Ø OR R61 WILL BE DETERMINED IN TESTING.
4. INSTALL W1 AND W2 FOR RLØ1.
   INSTALL W2 ONLY FOR RLØ2.

DESCRIPTION	DWG./PART NO.	ITEM NO.

UNLESS OTHERWISE SPECIFIED DIMENSIONS ARE IN INCHES

ANGLES ±0° 30'	CLASS OF ACCURACY (CHECK ONE)	NOMINAL DIMENSION RANGE INCHES					
		OVER 0 TO 0.2	OVER 0.2 TO 1.2	OVER 1.2 TO 4.0	OVER 4.0 TO 12.0	OVER 12.0 TO 40.0	OVER 40.0 TO 80.0
SURFACE QUALITY IN ✓	MEDIUM ☐	±.004	±.008	±.012	±.016	±.024	±.04
MICROINCHES	PREFERRED ☐	±.012	±.016	±.025	±.04	±.063	±0.1

QUANTITY & VARIATION

THIRD ANGLE PROJECTION

REMOVE BURRS AND BREAK SHARP CORNERS

DO NOT SCALE DWG

MATERIAL

FINISH

DRN. R. Richard 8/15/78
CHK'D
ENG. R. Nakanishi
PROJ. ENG. 9/27/78
PROD. 9/27/78
NEXT HIGHER ASSY. D-UA-5413534-0-0
SCALE
SHEET 1 OF 2

FIRST USED ON

digital

TITLE
DC SERVO AND POWER SUPPLY

SIZE	CODE	NUMBER	REV.
D	CS	5413534-0-1	R

DIST.

REVISIONS			
CHANGE N	CHK		REV.
5413534-CZØØ1 BOB NOGUCHI			B

DEC FORM NO. DNO 100-C

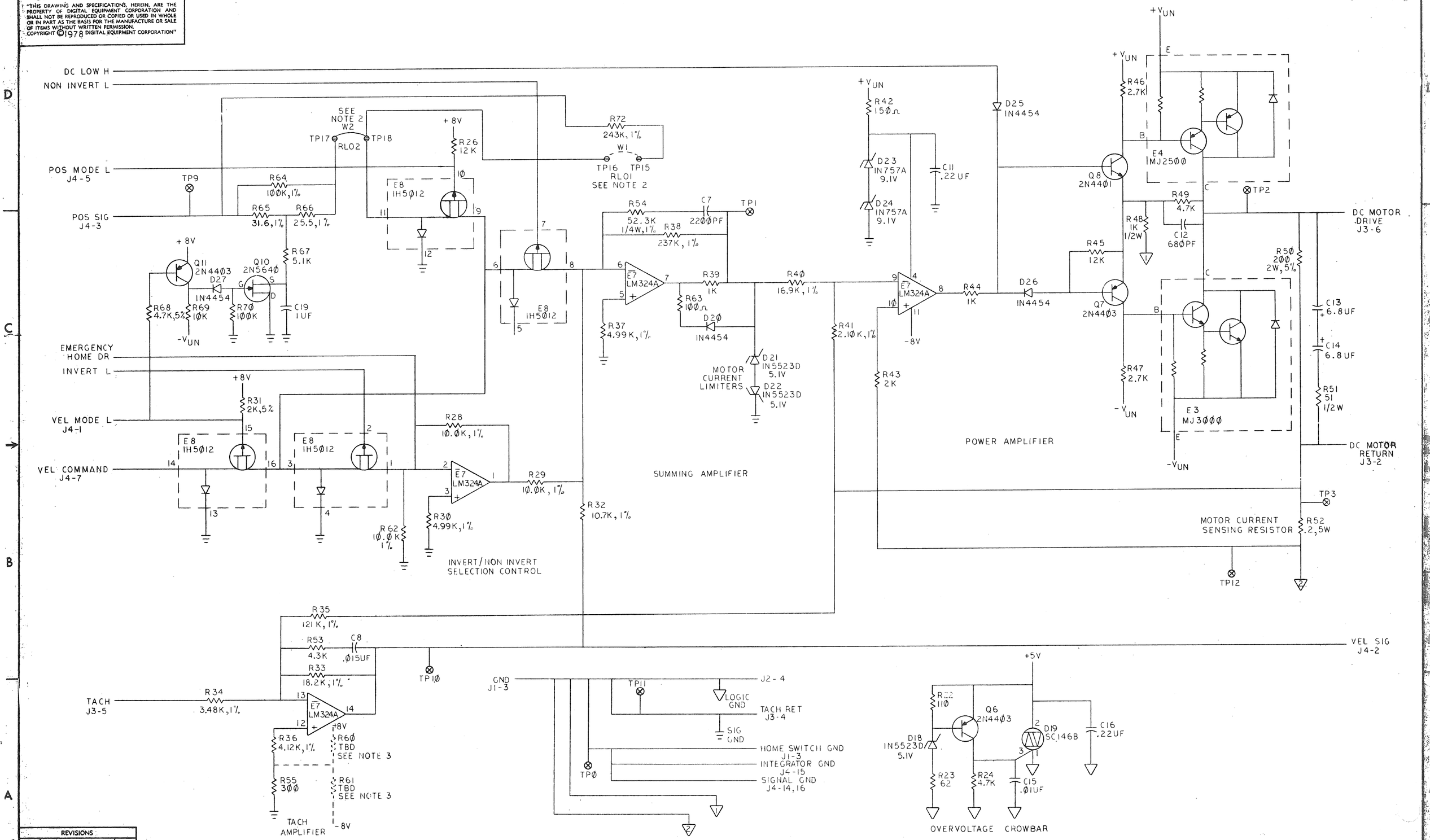

REVISIONS		
CHK	CHANGE NO.	REV.

TITLE	SIZE	CODE	NUMBER	REV.
DC SERVO AND POWER SUPPLY	D	CS	5413534-0-1	B
SCALE	SHEET 2 OF 2	DIST.		

DSC FORM NO. DSD 132

COMPONENT SIDE VIEW

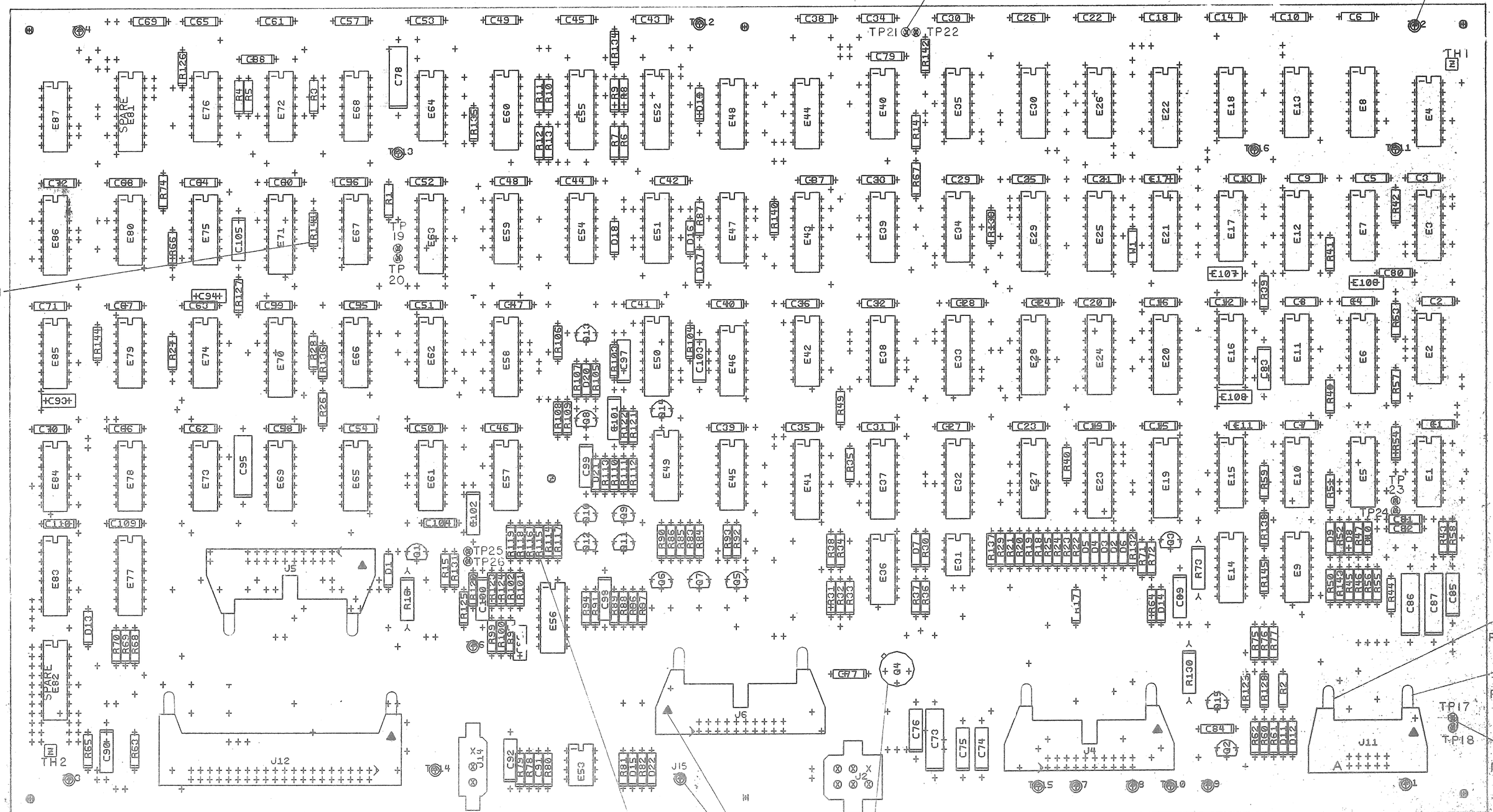

NOTES:

1. INSTALL ITEM 106 AFTER TEST (BETWEEN TP17 & TP18 ONLY).
2. VALUE OF ITEM 2 TO BE DETERMINED AT NEXT HIGHER ASSEMBLY.
3. STAMP ORIENTATION TRIANGLES ON CONNECTORS AS SHOWN WITH INDELIBLE RED INK.

CHK	CHANGE NO	REV	
	5414025-CX001 M.BROWN	B	
	5414025-CX003 M. ZARICH	C	

ETCH REV. B
P.C. DESIGN DATA BASE REV. BL

SIGNATURES	DATE
DRN.	9-27-79
CHK'D.	9-27-79
ENG.	5/22/79
PROJ. ENG.	5/22/79
PROD.	

SCALE 2/1
SHT. 1 OF 2

digital

TITLE DRIVE LOGIC

SIZE D | CODE UA | NUMBER 5414025-0-0 | REV

NEXT HIGHER ASSY. B-DD-5414025-0

AUTOMATED BY PRTLST,3H(20) P A R T S L I S T PAGE 01 OF 03

LINE	ITEM	DOCUMENT NUMBER	PART NUMBER	DESCRIPTION	QTY PER VARIATION 00	REFERENCE DESIGNATORS
1	1	D-MD-5014024-0-0	5014024-00	DRILL AND ETCH BRD	1	
2	2	EWS		RESISTOR,FINAL TEST, 1/4W, 1%	4	R115,R116,R118,R119
3	3		1000023-00	330.0 MMF 100V 5%200PPM DM15S	4	C93,C106-C108
4	4		1000024-00	470.0 MMF 100V 5%200PPM DM15S	1	C94
5	5		1000064-00	3.9MFD 10V 10% 150D S.TA	2	C76,C85
6	6		1000076-00	39 MFD 10V 10% 150D S.TA	4	C73,C78,C86,C95
7	7		1001610-00	.01 MFD 50V -20+80 Z5U AXIAL	74	C1-C6,C8-C39,C40-C45,C47-C49,
					CONT	C51-C53,C55-C68,C70-C71,C77,
					CONT	C79-C82,C84,C88,C104
8	8		1001776-00	1 MFD 35V 10% S.TANT	4	C74,C75,C92,C97
9	9		1004812-00	15 MFD 20V 10% S.TANT	1	C87
10	10		1005784-00	.01 MFD 100V 10% 663VW MYLR	1	C101
11	11		1010978-32	.047 MFD 50V 10% 2C067CER.	1	C96
12	12		1013466-07	220.0 MMF 50V 5% CER.	1	C91
13	13		1013466-08	680.0 MMF 50V 10% CER.	2	C89,C90
14	14		1013466-09	1000.0 MMF 50V 10% CER.	1	C83
15	15		1013466-10	3300.0 MMF 50V 5% CER.	4	C98,C100-C103,C105
16	16		1013466-11	.22 MFD 50V +80/-20% CER.	2	C99,C102
17	17		1111577-00	1N 4454 TR= 4NS PIV= 50 S	16	D1,D7-D20,D22
18	18		1113953-00	1N 5523D VZ= 5.1 1%	1	D21
19	19		1114117-00	1N 4152 PIV=450 I=75M	5	D2-D6
20	20		1209941-02	HEADER 100 40POS RT ANGLE	1	J12
21	21		1209941-03	HEADER RT ANGLE LEFT L	5	
22	22		1209941-04	HEADER RT ANGLE,RIGHT	5	
23	23		1209941-05	HEADER.100 10POS RT ANGLE	1	J11
24	24		1209941-06	HEADER.100 20POS RT ANGLE	3	J4-J6
25	25		1210385-01	PIN 1POS WIRE WRAP	10	TP17-TP26
26	26		1213922-02	HEADER 3POS	1	J14
27	27		1213922-04	HEADER 6POS	1	J2
28	28		1300229-00	100.0 .25 W 5.0 % CC	5	R48,R133-R136

REVISION HISTORY			BASIC PART NO: 5414025											
ENG	ECO NUMBER	REV	SECTION A OF A	DRN: ART SIMM	DATE: 18-APR-79	D	I	G	I	T	A	L
---	INITIAL	A	SECTION,VARIATION INDEX	CHKD: P. KENDRICK	DATE: 18-APR-79	TITLE: DRIVE LOGIC — PARTS LIST						
MA	5414025-CX001	B	AA 00									
MB	5414025-CX002	C	BB									
MZ	5414025-CX003	D	CC	DES.ENG: MIKE BROWN	DATE: 18-APR-79							
	M. Zarich W.C.M. 17 JAN 80		DD									
			EE			DOCUMENT NUMBER						
			FF	RESP.ENG.: MIKE BROWN	DATE: 18-APR-79							
			HH			SIZE: K	CODE: PL	NUMBER: 5414025-0-DBP	REV: D			
			JJ									
			KK	MFG.ENG.: D. LICK	DATE: 18-APR-79							
			LL									
			MM	ASSEMBLY NUMBER:	TOP DOCUMENT NUMBER:	FILE NAME: Z0496D.PLS	EDIT #: 22					
			NN	D-UA-5414025-0-0	#RL02							

AUTOMATED BY PRTLST,3H(20) P A R T S L I S T PAGE 02 OF 03

LINE	ITEM	DOCUMENT NUMBER	PART NUMBER	DESCRIPTION	QTY PER VARIATION 00	REFERENCE DESIGNATORS
29	29		1300271-00	220.0 .25 W 5.0 % CC	4	R3,R14,R41,R143
30	30		1300315-00	470.0 .50 W 5.0 % CC	3	R16,R73,R130
31	31		1300316-00	470.0 .25 W 5.0 % CC	4	R1,R2,R79,R142
32	32		1300365-00	1.0 K .25 W 5.0 % CC	16	R5,R15,R39,R40,R42,R47,R52,R54,
					CONT	R56,R61,R72,R74,R101,R106,R129,
					CONT	R140
33	33		1300411-00	2 K 1/4W 1% 100PPM	1	R144
34	34		1300439-00	3.30 K .25 W 5.0 % CC	3	R93,R124,R126
35	35		1300447-00	4.70 K .25 W 5.0 % CC	36	R4,R6-R13,R26-R28,R34,R35,R38,
					CONT	R43,R44,R49,R53,R57,R58,R62,
					CONT	R75-R78,R80,R82,R92,R102,R105,
					CONT	R123,R125,R127,R138,R145
36	36		1300479-00	10.0 K .25 W 5.0 % CC	2	R70,R107
37	37		1302388-00	2.0 K .25 W 5.0 % CC	13	R18-R21,R45,R50,R66,R67,R71,R87,
					CONT	R122,R128,R131
38	38		1302391-00	20.0 K .25 W 5.0 % CC	1	R59
39	39		1302394-00	30.0 K .25 W 5.0 % CC	1	R95
40	40		1302398-00	470.0 K .25 W 5.0 % CC	1	R55
41	41		1302466-00	100.0 K .25 W 5.0 % CC	1	R121
42	42		1302514-00	39.0 K .25 W 5.0 % CC	2	R91,R120
43	43		1302666-00	10.0 M .25 W 5.0 % CC	1	R94
44	44		1302871-00	1.21 K 1/4W 1% RN55D-F 100PPM	1	R88
45	45		1303044-00	100 K 1/4W 1% RN55D-F 100PPM	1	R25
46	46		1303047-00	464 1/4W 1% RN55D-F 100PPM	5	R64,R65,R83,R85,R113
47	47		1303114-00	1.0 K 1/4W 1% RN55D-F 100PPM	2	R89,R117
48	48		1303312-00	10.0 K 1/4W 1% RN55D-F 100PPM	7	R17,R29-R31,R36,R60,R63
49	49		1304693-00	562 1/4W 1% RN55D-F 100PPM	1	R108
50	50		1304841-00	75.0 K .25 W 5.0 % CC	1	R81
51	51		1304862-00	1.62 K 1/4W 1% RN55D-F 100PPM	1	R110
52	52		1304870-00	6.81 K 1/4W 1% RN55D-F 100PPM	1	R33
53	53		1305124-00	287 1/4W 1% RN55D-F 100PPM	2	R84,R86
54	54		1305265-00	39.2 K 1/4W 1% RN55D-F 100PPM	1	R24
55	55		1305266-00	365 K 1/4W 1% RN55D-F 100PPM	2	R96,R99
56	56		1305405-00	24.9 K 1/4W 1% RN55D-F 100PPM	1	R23
57	57		1309595-00	1.0 M .25 W 5.0 % CC	3	R46,R51,R132
58	58		1310632-00	2.37 K 1/4W 1% RN55D-F 100PPM	1	R109
59	59		1311594-00	30.1 K 1/4W 1% RN55D-F 100PPM	2	R97,R100
60	60		1312929-00	62.0 .25 W 5.0 % CC	2	R111,R112
61	61		1312930-00	5.10 K .25 W 5.0 % CC	3	R68,R69,R137
62	62		1312989-00	17.8 K 1/4W 1% RN55D-1782F	3	R22,R103,R104
63	63		1313589-00	1.4 K 1/4W 1% RN55D-F 100PPM	1	R90
64	64		1313846-00	2.26 K 1/4W 1% RN55D-F 100PPM	1	R32
65	65		1314041-00	3.01 K 1/4W 1% RN55D-F	1	R37
66	66		1314491-00	1.02 K 1/4W 1% RN55D-F 100PPM	1	R114
67	67		1513489-00	2N 4401 NPN 350MW SI 40 20	3	Q7,Q10,Q12
68	68		1513490-00	2N 4403 PNP 350MW SI-40 30	10	Q1-Q3,Q5,Q6,Q8,Q9,Q11,Q13,Q15
69	69		1513697-00	2N 5640 FET N CHNNL	1	Q14
70	70		1909928-00	7416 INVERTER GATE-HEX 1I	4	E9,E10,E68,E85

D	I	G	I	T	A	L	TITLE: DRIVE LOGIC	SECTION A OF A	SIZE: K	CODE: PL	DOCUMENT NUMBER: 5414025-0-DBP	REV: D

AUTOMATED BY PRTLST.3H(20) P A R T S L I S T SHEET A3 OF A3

LINE	ITEM	DOCUMENT NUMBER	PART NUMBER	DESCRIPTION	QTY PER VARIATION CO	REFERENCE DESIGNATOR
71	71		1910046-00	7442 DECODER-1 OF 10,BCD	1	E35
72	72		1910268-00	DEC 75107B RECEIVER,LINE,DUAL,	4	E57,E61,E65,E87
73	73		1910298-00	741 OP AMP GEN PURP. COM	1	E31
74	74		1910363-00	7496 SHIFT REG.,5BIT	1	E63
75	75		1910536-00	74S10 NAND GATE-TRIPLE 3IN	1	E45
76	76		1910655-00	74157 MUX 2 TO 1 QUAD	2	E23,E24
77	77		1911341-00	75113 DRIVER,LINE,DUAL,MA	3	E77,E83,E86
78	78		1912107-01	324ANOP AMP,QUAD	1	E49
79	79		1912108-00	339 VOLT CMPRTR,QUAD	3	E5,E36,E56
80	80		1912541-00	79M05 VOLT REG,FIX -5V	1	Q4
81	81		1912697-00	LS174 FF-D HEX W/CLEAR	2	E37,E41
82	82		1912799-00	LS00 NAND-GATE-QUAD 2IN,P	4	E7,E15,E44,E67
83	83		1912801-00	LS02 NOR-GATE-QUAD 2IN	4	E1,E30,E39,E54
84	84		1912803-00	LS04 INVERTER GATE-HEX 1I	2	E79,E80
85	85		1912805-00	LS08 AND GATE-QUAD 2IN,PO	6	E14,E34,E38,E[illegible]9,E72,E76
86	86		1912807-00	LS10 NAND GATE-TRIPLE 3IN	1	E18
87	87		1912810-00	LS20 NAND GATE-DUAL 4IN	1	E2
88	88		1912813-00	LS27 NOR GATE-TRIPLE 3IN	1	E73
89	89		1912816-00	LS32 OR GATE-QUAD 2IN,POS	4	E17,E35,E59,E84
90	90		1912824-00	LS74 FF-D DUAL,EDGE TRIGG	9	E3,E11,E16,E26,E42,E46,E47,E62,
					CONT	E75
91	91		1912829-00	LS86 X-OR GATE-QUAD 2IN	3	E51,E66,E78
92	92		1912837-00	LS123 ONE SHOT-DUAL,RETRIG	1	E50
93	93		1912854-00	LS193 COUNTER,SYNCHR,4BIT,	3	E27,E28,E43
94	94		1912855-00	LS195 SHIFT REG.,4BIT PARA	5	E19-E22,E25
95	95		1912857-00	LS197 COUNTER,BINARY,PRESET	4	E4,E8,E13,E74
96	96		1912864-00	LS279 LATCH,QUAD-S-R	6	E6,E12,E29,E33,E58,E71
97	97		1913414-00	LS14 INVERTER GATE-HEX SC	2	E40,E48
98	98		1914156-00	LM 393 VOLT.COMPARATOR DUAL	1	E53
99	99		23368A2-00	A2-02,A2-04	1	E52
100	100		23371A2-00	A2-02,A2-04	1	E60
101	101		23444A2-00	A2-02,A2-04	1	E70
102	102		23445A2-00	A2-02,A2-04	1	E32
103	103		9007201-00	TRANSIPADS #10253	1	
104	104		9007791-00	TERM PCB 2POS SOLDER,TURRET	15	TP1-TP4,TP6-TP16
105	105		9J09185-00	JUMPER, WIRE, INSULATED, BLACK B	1	W1
106	106		9105740-55	WIRE(WRAP)30AWG UL1423	A/R	
107	107		1012784-00	.047 MFD 50V -20+80 CER	8	C7,C46,C50,C54,C69,C72,C109,C110
108	108		1911324-00	7414 INVERTER,HEX 1IN SCH	1	E64
109	109		1217377-00	TERM QUICK 1POS TAB PC MNT	1	J15

RELEASABLE

D	I	G	I	T	A	L	TITLE	SECTION A OF A	SIZE	CODE	DOCUMENT NUMBER	REV
							DRIVE LOGIC		K	PL	5414025-0-DBP	D

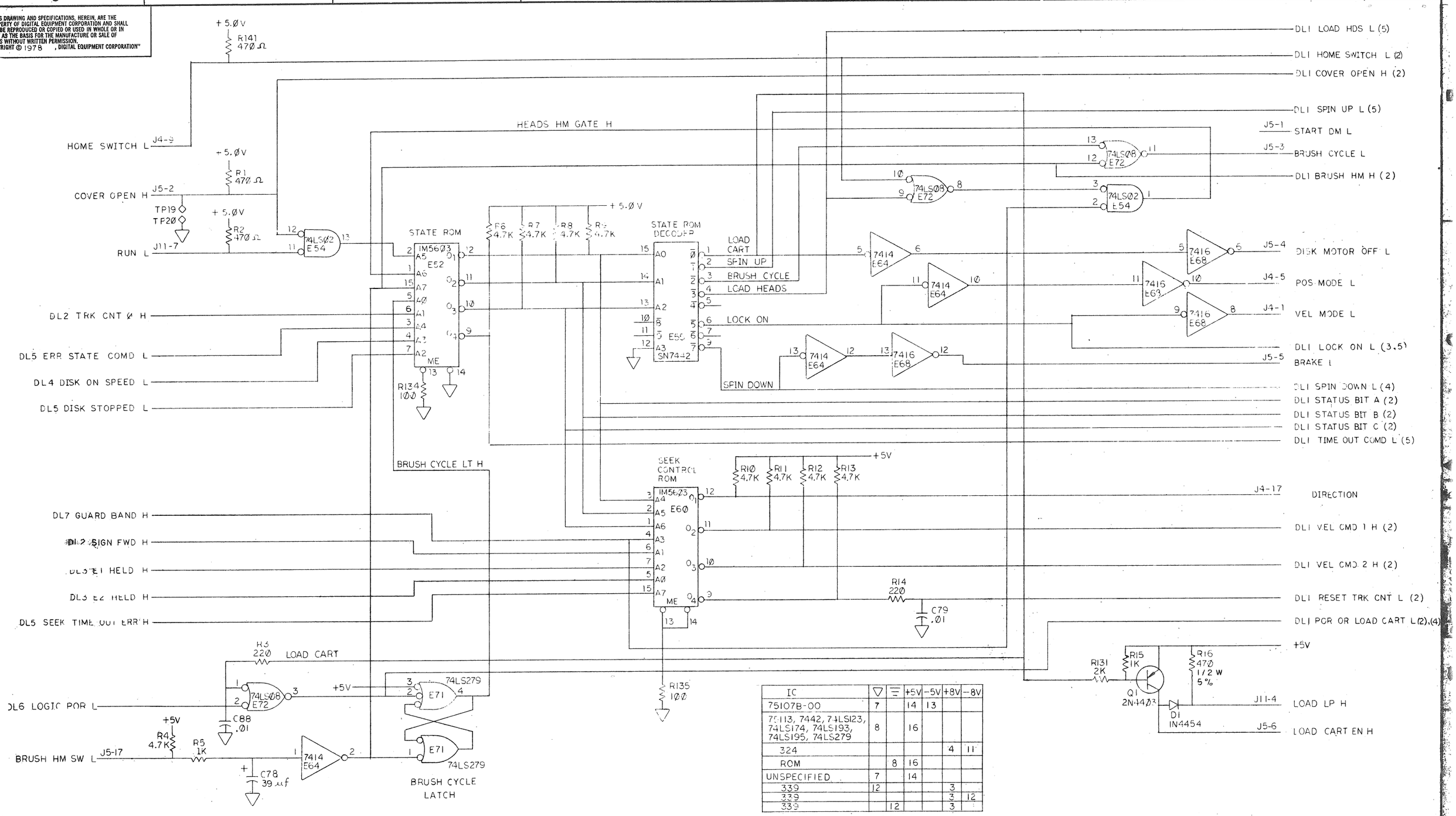

IC	▽	▽̄	+5V	-5V	+8V	-8V
75107B-00	7		14	13		
7413, 7442, 74LS123, 74LS174, 74LS193, 74LS195, 74LS279	8		16			
324					4	11
ROM		8	16			
UNSPECIFIED	7		14			
339	12				3	
339					3	12
339		12			3	

REVISIONS			
REV.	B	C	D
DRAWING NO.	5414025-CX0001	5414025-CX0002	5414025-CX0003
CHK	M. BROWN	M. BROWN	M. ZARICH
DRN			
ENG			
PROD			

DRN.		5 JUNE 79
CHK'D		3 MAY 79
ENG.		5 June 79
PROJ. ENG.		5 June 79
PROD.		
NEXT HIGHER ASSY.	B-DD-5414025-0	
SCALE	—	
SHEET	1 OF 8	

FIRST USED ON

digital

TITLE DRIVE LOGIC (STATE CONTROL LOGIC) (DL1)

SIZE	CODE	NUMBER	REV.
D	CS	5414025-0-1	D

DIST.

CMD 2	CMD 1	MODE	VEL
Ø	Ø	OFF	Ø
Ø	1	GUARD BAND	3 IPS
1	Ø	HEAD LOAD	6 IPS
1	1	HEAD UNLOAD	15 IPS

NOTES:

1. W1 IN FOR RLØ1.
   W1 OUT FOR RLØ2.
2. W2 NOT FOR FIELD USE
   (W2 IS ON DL5 PAGE)

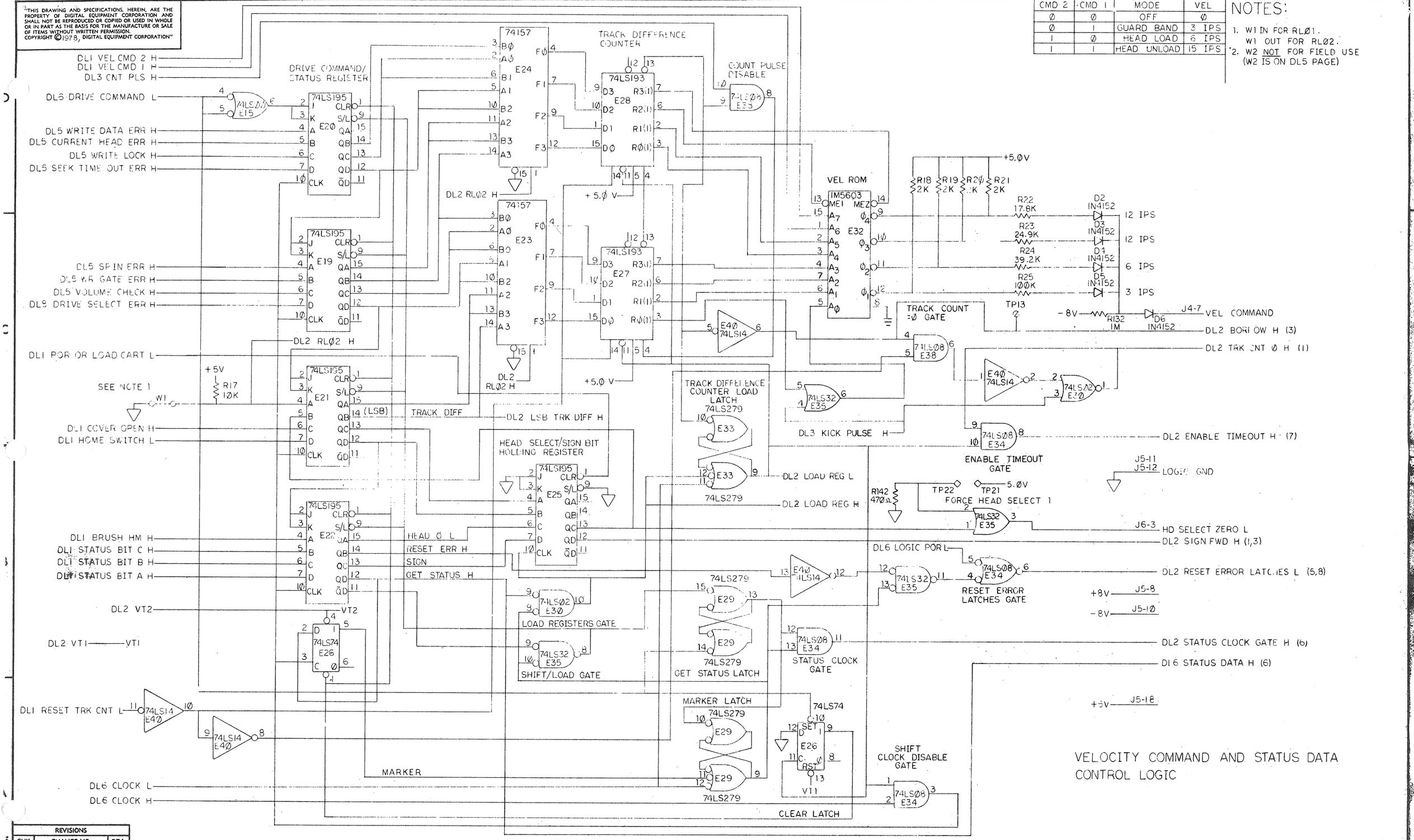

VELOCITY COMMAND AND STATUS DATA CONTROL LOGIC

REVISIONS		
CHK	CHANGE NO.	REV.

TITLE	SIZE	CODE	NUMBER	REV.
DRIVE LOGIC (DL2)	D	CS	5414025-0-1	D
SCALE — / — SHEET 2 OF 8	DIST.			

DEC FORM NO. DRD 127

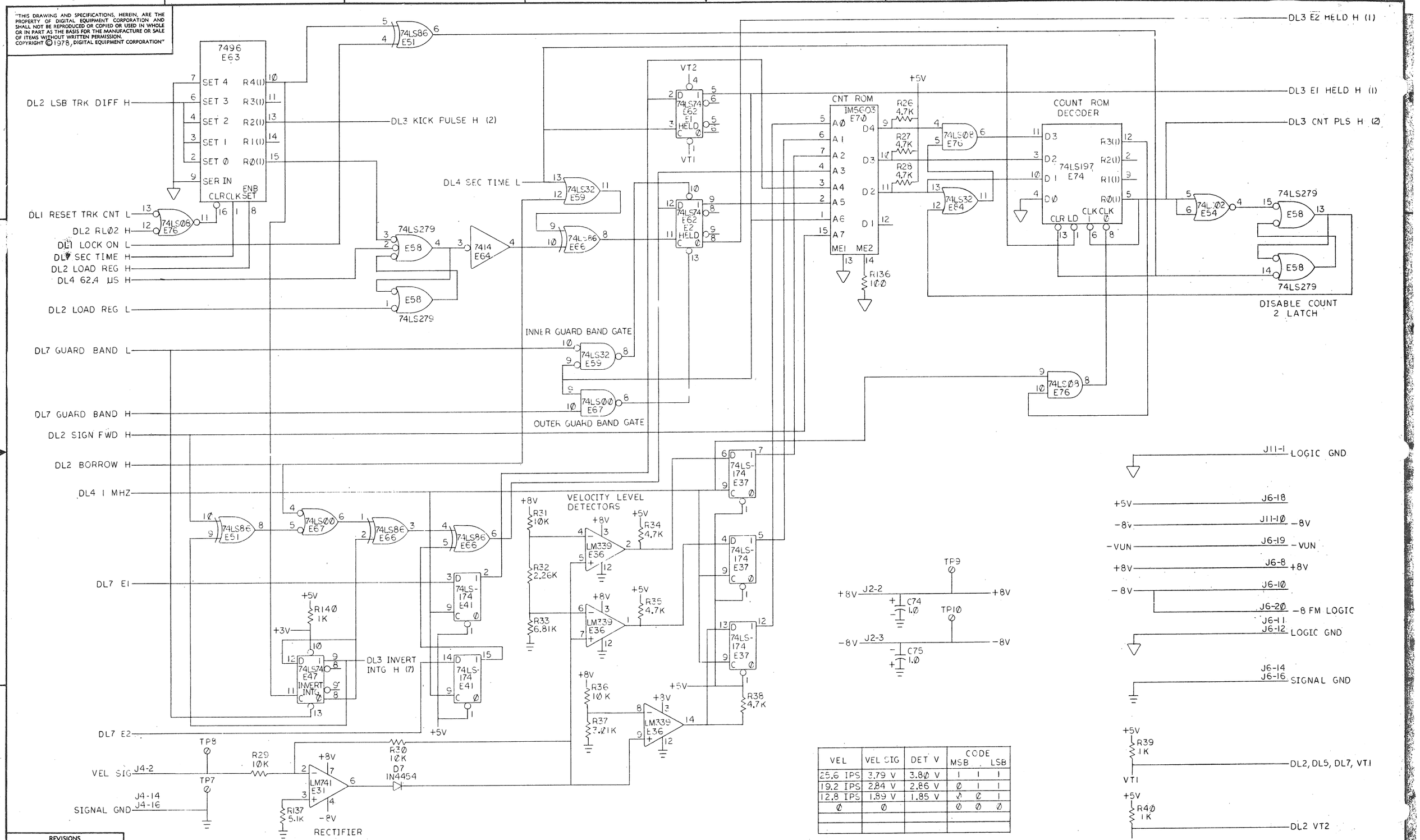

VEL	VEL SIG	DET V	CODE MSB		LSB
25.6 IPS	3.79 V	3.8Ø V	1	1	1
19.2 IPS	2.84 V	2.86 V	Ø	1	1
12.8 IPS	1.89 V	1.85 V	Ø	Ø	1
Ø	Ø		Ø	Ø	Ø

REVISIONS		
CHK	CHANGE NO.	REV.

TITLE	SIZE	CODE	NUMBER	REV.
DRIVE LOGIC (COUNT LOGIC) (DL3)	D	CS	5414025-0-1	D
SCALE — / —	SHEET 3 OF 8	DIST.		

MAKEPAGE P-2574

DEC FORM NO. DRD 137

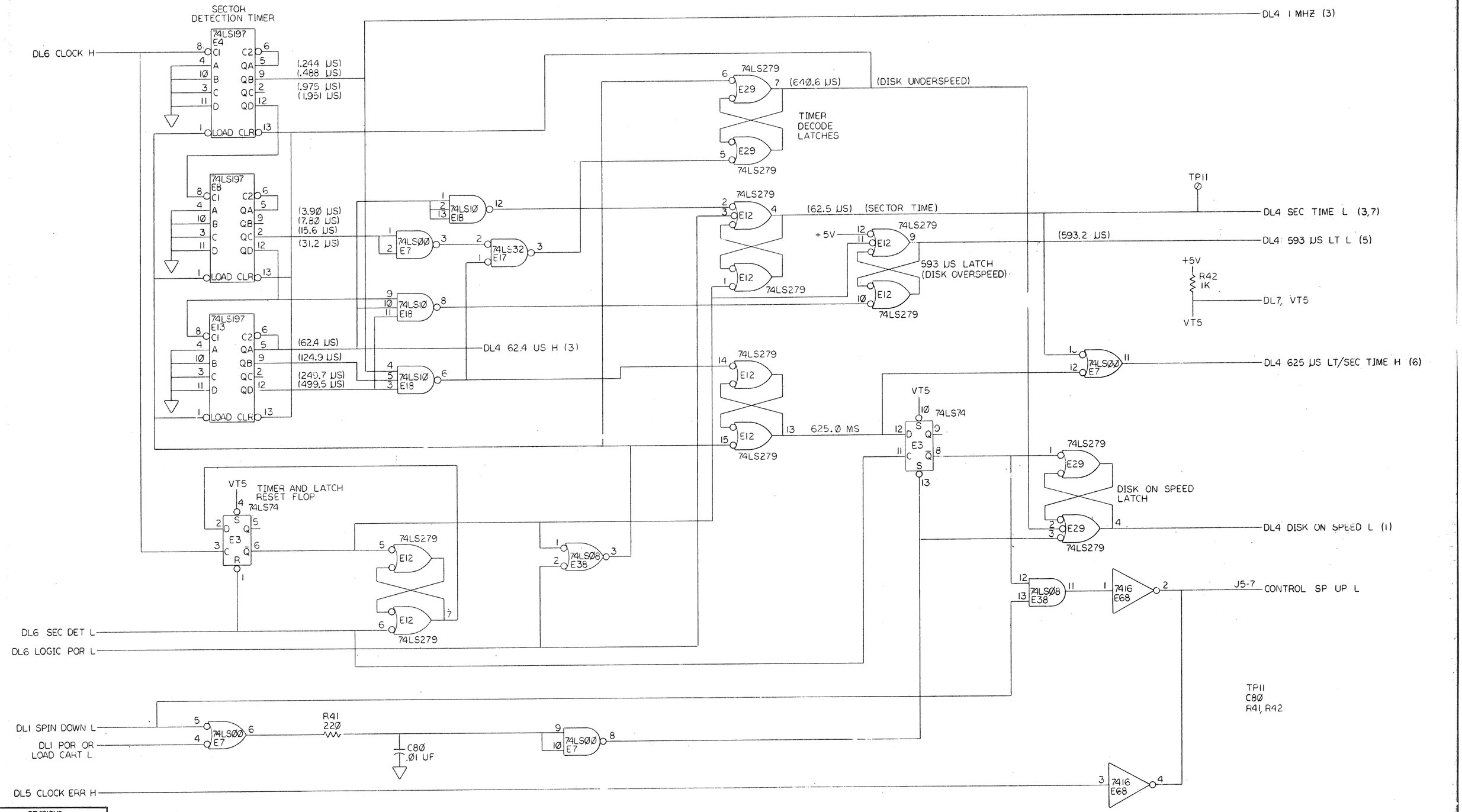

REVISIONS		
CHK	CHANGE NO.	REV.

TITLE	SIZE	CODE	NUMBER	REV.
DRIVE LOGIC (DISK SPEED CONTROL) (DL4)	D	CS	5414025-0-1	D
SCALE —	SHEET 4 OF 8	DIST.		

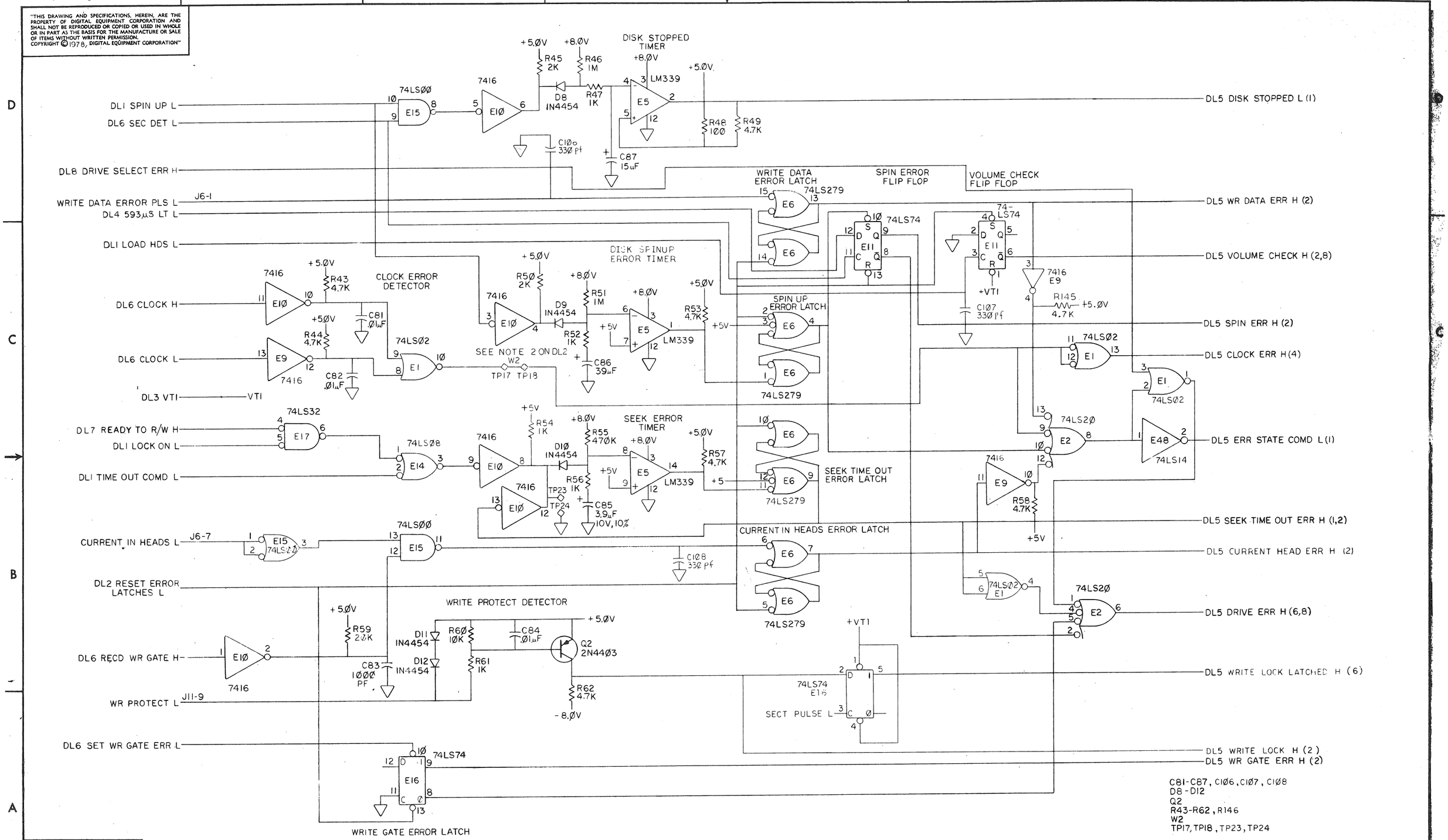

REVISIONS		
CHK	CHANGE NO.	REV.

TITLE	SIZE	CODE	NUMBER	REV.
DRIVE LOGIC (ERROR LOGIC) (DL5)	D	CS	5414025-0-1	D
SCALE — / —	SHEET 5 OF 8	DIST.		

DEC FORM NO. BRO 137

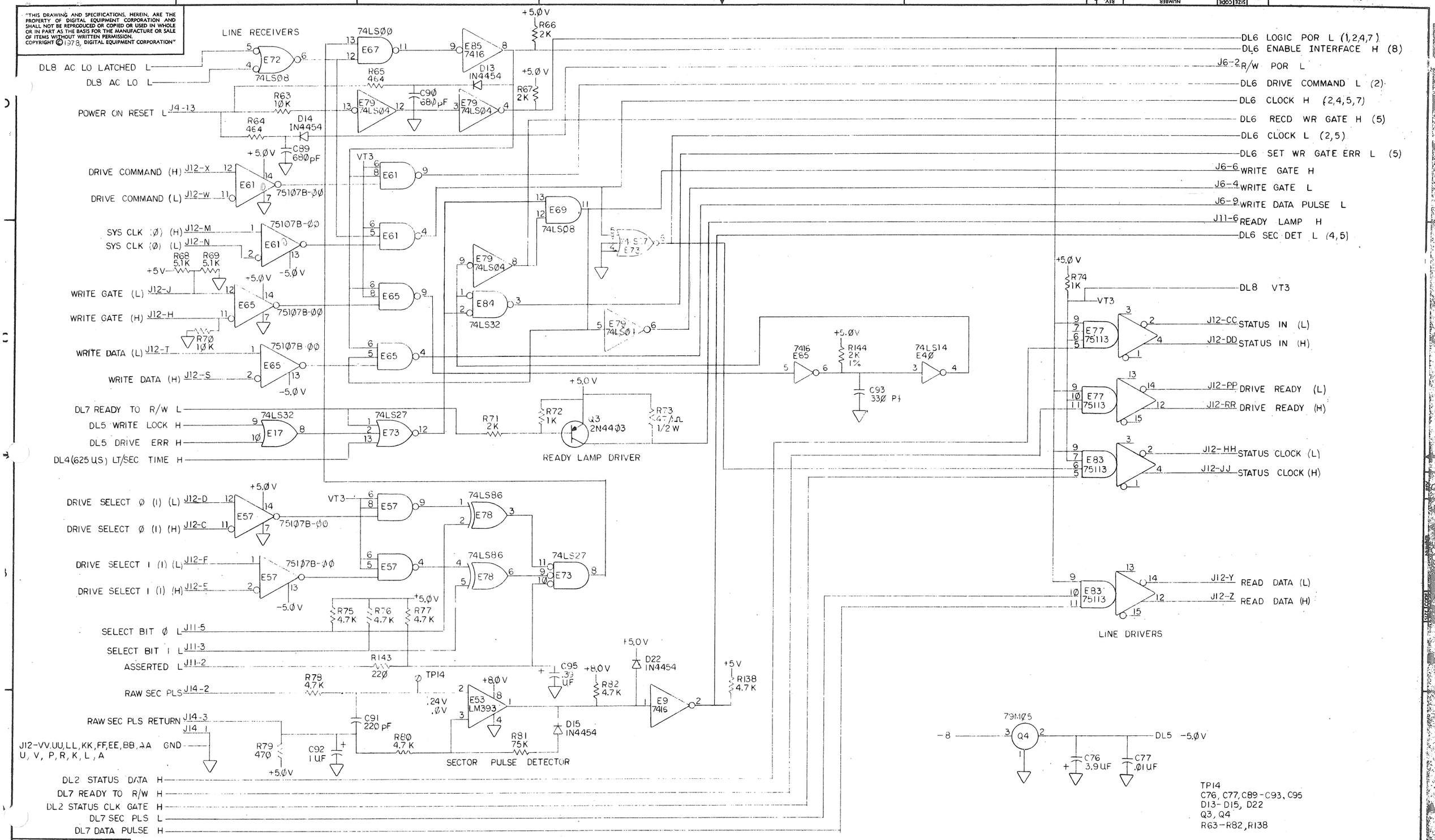

REVISIONS		
CHK	CHANGE NO.	REV.

TITLE	SIZE	CODE	NUMBER	REV.
DRIVE LOGIC (INTERFACE LOGIC) (DL6)	D	CS	5414025-0-1	D
SCALE —	SHEET 6 OF 8	DIST.		

DEC FORM NO. BRD 137

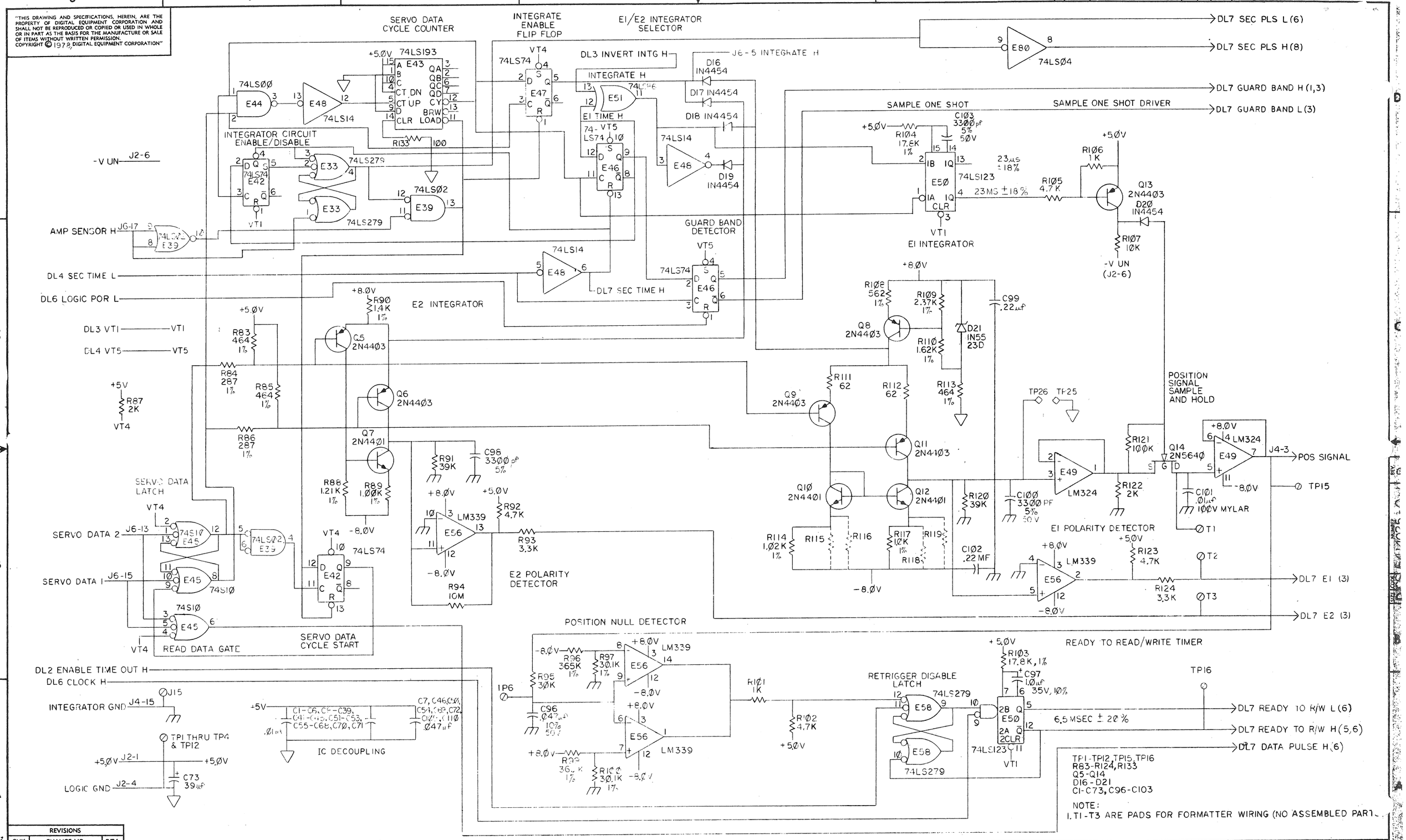

REVISIONS		
CHK	CHANGE NO.	REV.

TITLE	SIZE	CODE	NUMBER	REV.
DRIVE LOGIC (INTEGRATOR LOGIC) (DL7)	D	CS	5414025-0-1	D
SCALE	SHEET 7 OF 8	DIST.		

DEC FORM NO. DRD 537

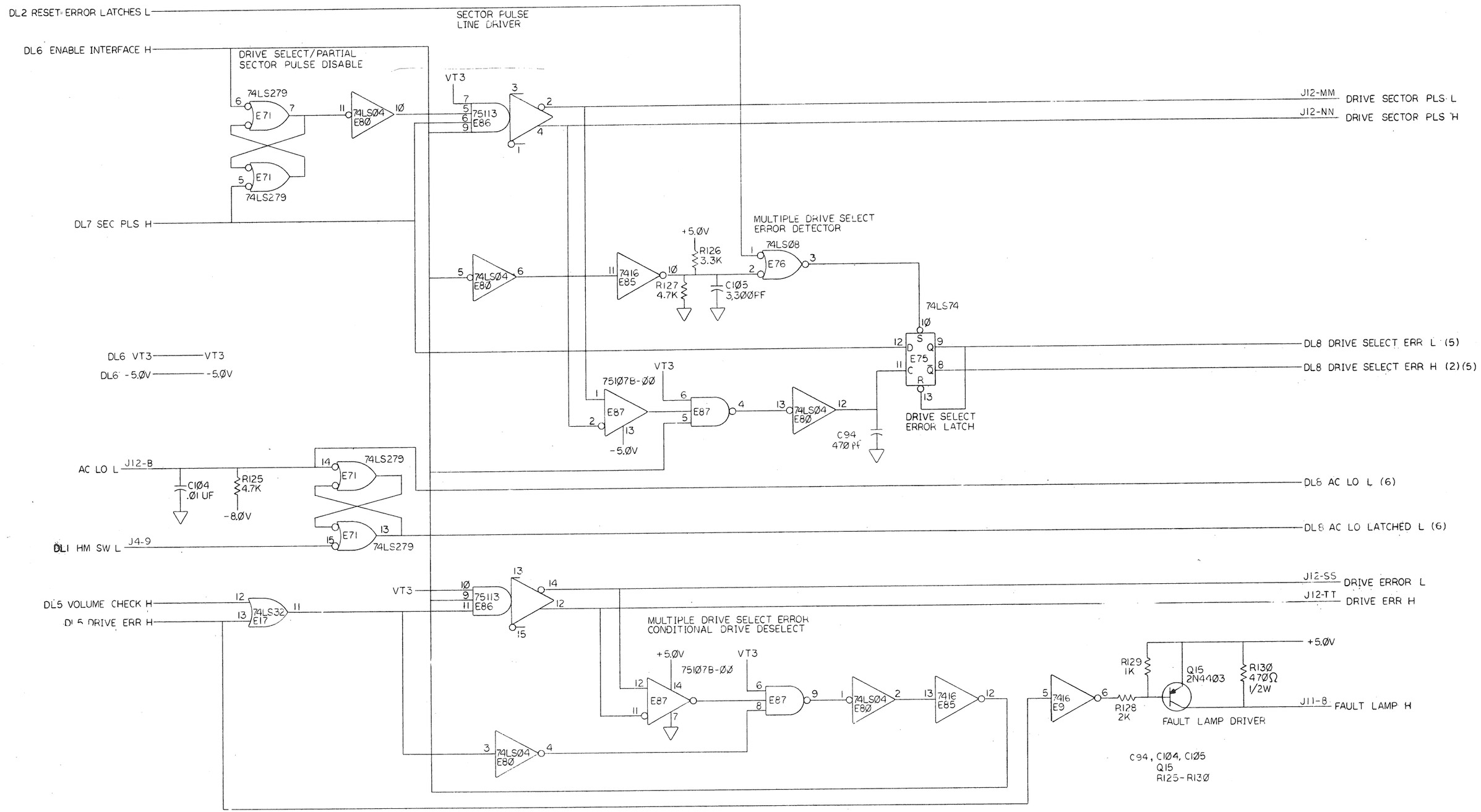

REVISIONS		
CHK	CHANGE NO.	REV.

TITLE	SIZE	CODE	NUMBER	REV
DRIVE LOGIC (DL8)	D	CS	5414025-0-1	D
SCALE — / —	SHEET 8 OF 8		DIST.	

DEC FORM NO. ORD 137