"THE MATERIAL HEREIN IS FOR INFORMATION PURPOSES ONLY AND IS SUBJECT TO CHANGE WITHOUT NOTICE. DIGITAL EQUIPMENT CORPORATION ASSUMES NO RESPONSIBILITY FOR ANY ERRORS WHICH MAY APPEAR HEREIN."

FIELD MAINTENANCE PRINT SET

"THIS DRAWING AND SPECIFICATIONS, HEREIN, ARE THE PROPERTY OF DIGITAL EQUIPMENT CORPORATION AND SHALL NOT BE REPRODUCED OR COPIED OR USED IN WHOLE OR IN PART AS THE BASIS FOR THE MANUFACTURE OR SALE OF ITEMS WITHOUT WRITTEN PERMISSION. COPYRIGHT © 1977 , DIGITAL EQUIPMENT CORPORATION."

TABLE OF CONTENTS

B-TC-DLV11-F-1	ASYN. LINE INTERFACE (TC)
A-PL-DLV11-F-Ø	ASYN. LINE INTERFACE (PL)
D-UA-M8Ø28-Ø-Ø	DLV11-F ASYN. LINE INTERFACE, M8Ø28
B-PL-M8Ø28-Ø-Ø	DLV11-F ASYN. LINE INTERFACE, M8Ø28
D-CS-M8Ø28-Ø-1	DLV11-F ASYN. LINE INTERFACE, M8Ø28
A-PL-DLV11-F	SHIPPING LIST, DLV11-F
B-UA-BCØ5M-Ø-Ø	CABLE ASSEMBLY, BCØ5M
D-UA-BCØ3L-Ø-Ø	CABLE ASSEMBLY, BCØ3L

UNIT VARIATIONS COVERED BY THIS PRINT SET
DLV11-F
DLV11-FA
DLV11-FB

DLV11-F

Field Maintenance Print Set

Digital Equipment Corporation

PRINT SET ORDER NO.
MPØØ461

REVISIONS		
REV.	A	
CHG. NO.	DLV11F-1	
DATE	3-78	

USED ON OPTION/MODEL	
11/Ø3	

SHEET I OF 1

DRN. MIKE MICHAUD	DATE 11 AUG 77	TITLE: ASYN. LINE INTERFACE	digital
CHK'D D. HEALY	DATE 11 AUG 77		
PROJ. ENG. M.D. Michaud	DATE 18 Aug. 77	SIZE B / CODE TC / NUMBER DLV11-F-1	REV. A
FIELD SERV. B. Z.	DATE 22-Aug-77	DIST.	

EN-01124-16 N675 (327)

DEC 124

DIGITAL EQUIPMENT CORPORATION
MAYNARD, MASSACHUSETTS
PARTS LIST

MADE BY	M. MICHAUD	CHECKED	D. HEALY	SECTION	1
DATE	11 AUG 77	DATE	11 AUG 77		
ENG	M D Michaud	PROD		ISSUED SECT.	1
DATE		DATE	8-19-77		

ITEM NO.	DWG NO./PART NO.	DESCRIPTION	QUANTITY VARIATION DLV11-F	DLV11-FA	DLV11-FB
1	D-UA-M8Ø28-Ø-Ø	DLV11-F ASYN LINE INTERFACE, M8Ø28	1	1	1
2	A-SP-3700297-40	PACKAGING INSTRUCTIONS	1	1	1
3	B-UA-BCØ5M-Ø4	CABLE ASSEMBLY, BCØ5M-Ø4	-	1	-
4	D-UA-BCØ3L-Ø5	CABLE ASSEMBLY, BCØ3L-Ø5	-	-	1

TITLE	ASSY NO.	SIZE	CODE	NUMBER	REV	ECO NO.
ASYN LINE INTERFACE (DLV11-F)	NONE	A	PL	DLV11-F-Ø	A	DLV11F-00001
	SHEET 1 OF 1	DIST				

DEC FORM
DRA 110

REWORK INSTRUCTIONS:

ECO #1

ETCH CUTS:

1-1 E5-5, SIDE 2.
1-2 E5-6, SIDE 1 (UNDER E5)
1-3 E5-6, SIDE 2 (RIGHT SIDE OF PIN)
1-4 E5-8, SIDE 1 (UNDER E5)
1-5 E5-4, SIDE 2 (2 PLACES)
1-6 E5-1, SIDE 2.
1-7 BOTTOM E21, SIDE 2 (LEFT SIDE)
1-8 E33-2, SIDE 2.

WIRE ADDS (SIDE 1 UNLESS OTHERWISE NOTED)

1-9 FEED THRU AT RIGHT OF E17-8 TO E6-15.
1-10 TOP OF C26 TO E5-8.
1-11 E5-8 TO FEED THROUGH BELOW E16-7.
1-12 E6-16 TO FEED THROUGH BELOW E16-7.
1-13 FEED THROUGH AT LEFT OF BOTTOM OF R21 TO FEED THROUGH BELOW C26.
1-14 FEED THROUGH AT RIGHT OF E5-4 TO E5-4.
1-15 FEED THROUGH AT RIGHT OF E5-4 TO E6-8.
1-16 E5-1 TO E6-6.
1-17 E5-2 TO E6-5.
1-18 E6-13 TO E6-12.
1-19 E6-9 TO E6-4.
1-20 E6-2 TO E11-10.
1-21 E6-14 TO E6-2.
1-22 TOP OF R21 TO TOP OF R22 (SEE NOTE 3)
1-23 BOTTOM OF R21 TO FEED THROUGH AT LEFT OF BOTTOM OF R21 (SEE NOTE 3).
1-24 FEED THROUGH BELOW E19-10 TO E24-8.
1-25 ("-") NEG. SIDE OF C2 TO ("+") POS. OF C27.
1-26 E10-9 TO E14-7.
1-27 E33-2 TO E28-3
1-28 E28-1 TO FEED THROUGH AT RIGHT OF E7-8.
1-29 E4-4 TO E11-11

ECO #2

COMPONENT DELETES SIDE 1:

2-1. DELETE R24 (PN 1303177)
2-2. DELETE I.C. E26 (PN 1911998-01)
2-3. DELETE I.C. E33 (PN 1911998-01)

COMPONENT ADDS SIDE 1:

2-4. ADD R24 (PN 1300345)
2-5. ADD E26 (PN 1911998-02)
2-6. ADD E33 (PN 1911998-02)

NOTES:

1. 8 HOLES .0465 (+.000-.0045) MAYNARD ONLY
2. R41 NOT INSERTED
3. THIS CONNECTION IS MADE ON SIDE 2 BY BENDING THE RESISTER LEAD OVER TO THE ADJACENT FEED THROUGH.

CHK	CHANGE NO	REV
JA	M8028-1	B
N MICHAUD		
	M8028-2	C
J. CURTIS		

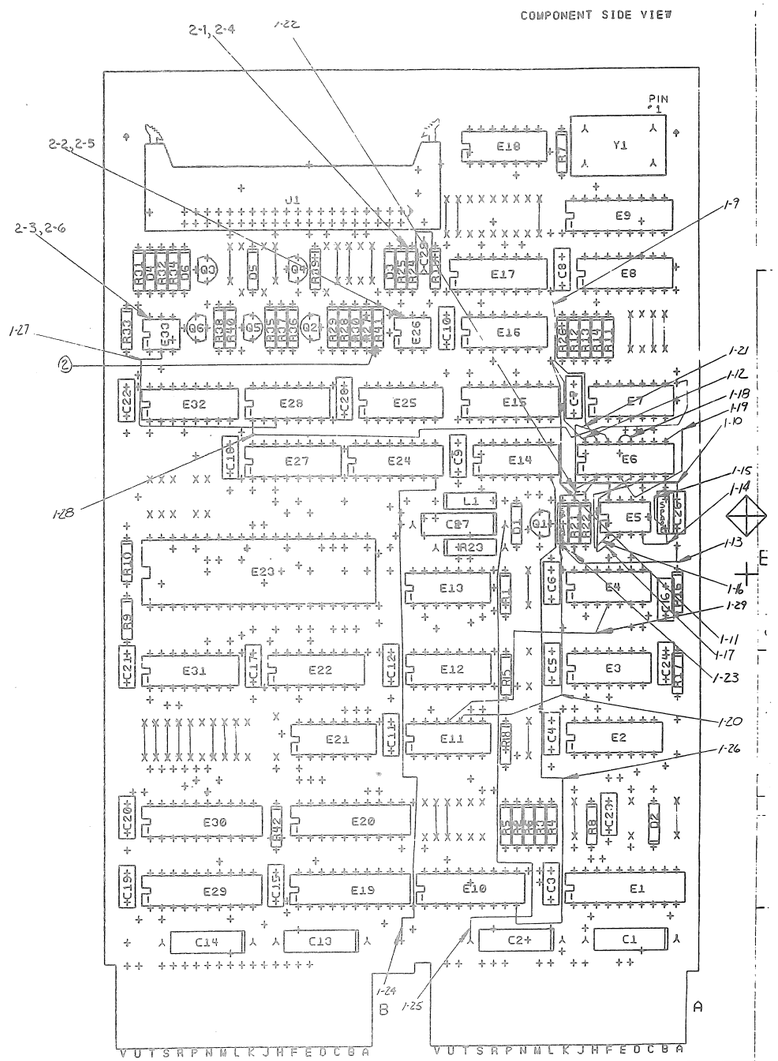

ETCH REV. B
P.C. DESIGN DATA BASE REV. B

SIGNATURES	DATE
DRN. Frank Smart	8-1-77
CHK. D. Frank Smart	8-1-77
ENG.	8-1-77
PROJ. ENG.	8-1-77
PROD.	
SCALE 1/2-1/1	
SHT. 1 OF 3	
NEXT HIGHER ASSY. B-DD-M8028-0-0	

digital

TITLE ASYNCHRONOUS LINE INTERFACE

SIZE	CODE	NUMBER	REV
0	UA	M8028-0-0	C

MC

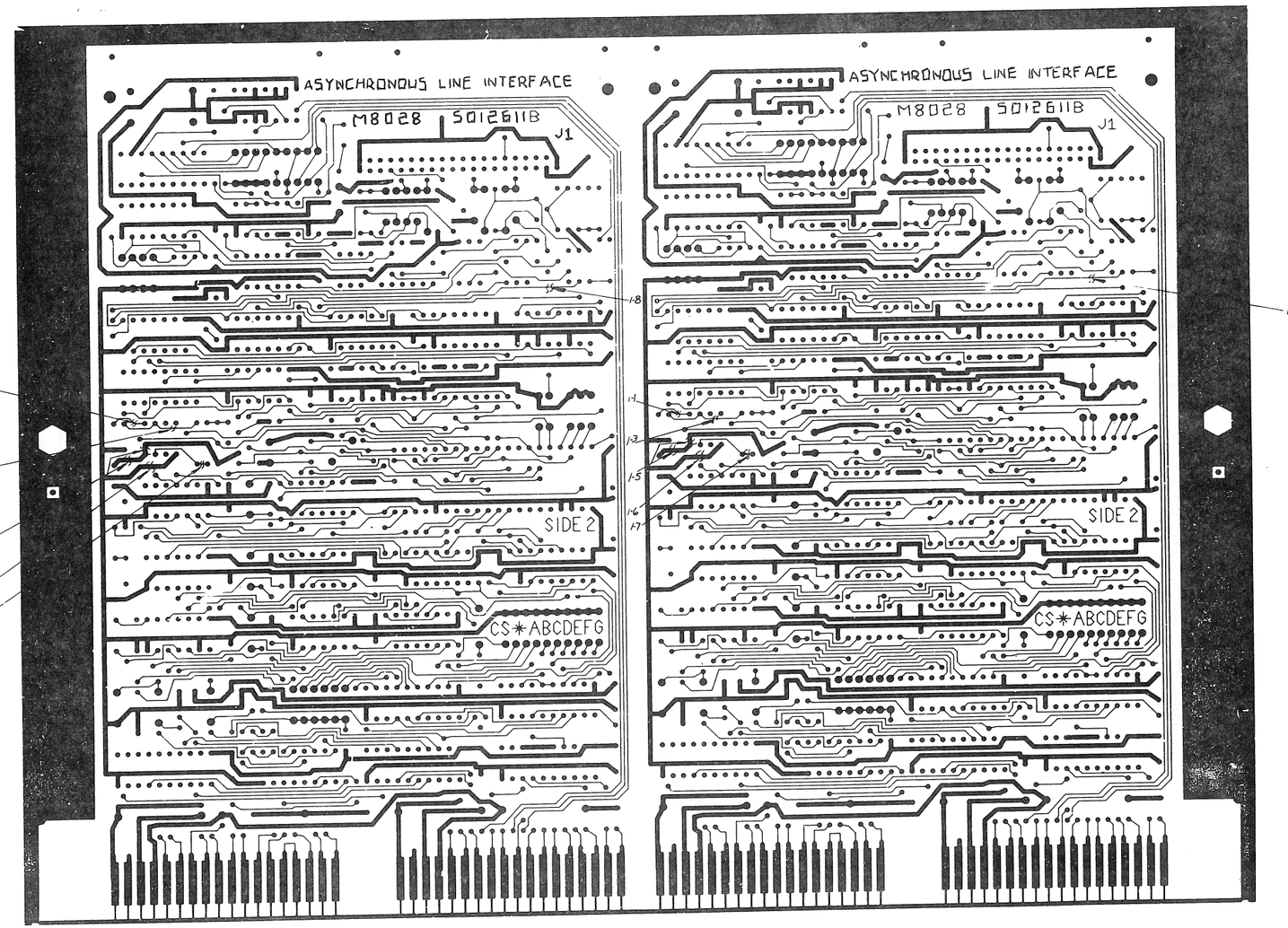
ASYNCHRONOUS LINE INTERFACE
M8028
5012611B
J1
1-8
1-1
1-3
1-5
1-6
1-7
SIDE 2
CS*ABCDEFG
ASYNCHRONOUS LINE INTERFACE
M8028
5012611B
J1
1-8
1-1
1-3
1-5
1-6
1-7
SIDE 2
CS*ABCDEFG

| | | |

THIS DRAWING AND SPECIFICATIONS, HEREIN, ARE THE PROPERTY OF DIGITAL EQUIPMENT CORPORATION AND SHALL NOT BE REPRODUCED OR COPIED OR USED IN WHOLE OR IN PART AS THE BASIS FOR THE MANUFACTURE OR SALE OF ITEMS WITHOUT WRITTEN PERMISSION.
COPYRIGHT © "DIGITAL EQUIPMENT CORPORATION"

REVISIONS		
LTR	CHANGE NO	REV

TITLE	SIZE	CODE	NUMBER	REV.
A L I	D	LA	M8028-0-0	C
SCALE 2 : 1	SHEET 3 OF 3	DIST		

P A R T S L I S T

LINE	ITEM	DOCUMENT NO.	PART NO.	DESCRIPTION	QTY	REFERENCE DESIGNATORS
1	1		1912729-00	DC 004 PROTOCOL,REG. SELECTOR	1	E1
2	2		1912730-00	DC 003 INTERRUPT,2 CIRCUIT	1	E10
3	3		1913040-00	DC 005 TRANSCEIVER 4BIT	4	E19,E20,E29,E30
4	4		1811660-02	OSCILLATOR, CRYSTAL, 5.0688MHZ, 14PIN DIP	1	Y1
5	5		1912805-00	LS08 AND GATE-QUAD 2IN,POSITIVE	2	E4,E13
6	6		1912803-00	LS04 INVERTER GATE-HEX 1IN	1	E11
7	7		1912799-00	LS00 NAND-GATE-QUAD 2IN,POSITIVE	1	E3
8	8		1911579-00	8641 TRANSCEIVER,BUS,QUAD,UNIBUS	1	E2
9	9		2112623-00	DUAL BAUD RATE GEN/PROG DIVIDER,MOS 18P	1	E9
10	10		1912867-00	LS298 MUX 1 OF 4,2IN W/STORAGE	1	E8
11	11	(SEE NOTE 66)	1913414-00	LS14 INVERTER GATE-HEX SCHMITT TRIG	1	E16
12	12		1912801-00	DEC LS02 NOR GATE-QUAD 2IN	1	E14
13	13		1912813-00	LS27 NOR GATE-TRIPLE 3IN	1	E7
14	14		1912816-00	LS32 OR GATE-QUAD 2IN,POSITIVE	1	E12
15	15		1912824-00	LS74 FF-D DUAL,EDGE TRIGGER,POS	2	E25,E21
16	16		1912845-00	LS153 MUX 1 OF 4 (DUAL) & DATA SEL	1	E17
17	17		1911527-00	8097 BUFFER GATE-HEX 2INPUT TRI-STA	2	E22,E31
18	18		1912647-00	LS257 MUX 1 OF 2 (QUAD) TRI-STA	3	E24,E27,E32
19	19		1912849-00	LS161 COUNTER,SYNCHR,4BIT BINARY	1	E15
20	20		1910322-00	DEC 1488L DRIVER,LINE,QUAD,EIA RS-232C	1	E18
21	21		1910323-00	DEC 1489L RECEIVER,LINE,QUAD,EIA RS-232	1	E28
22	22		2111450-00	UART 40K BAUD VARIATION OF 19-10459-00	1	E23
23	23		1914432-00	75454 DRIVER,PERIPH,DUAL,NOR	1	E5
24	24		1911998-02	4N26-20PTO COUPLED ISLTR 6 P	2	E26,E33
25	25		1001765-00	5000.0 MMF 100V 20% Z5U DISC$	1	C29
26	26		1000024-00	470.0 MMF 100V 5%200PPM DM15S (10-00	3	C23,C24,C28
27	27		1001610-01	.01 MFD 100V OR 50V Z5U DISC/800PF MIN	18	C3-C12,C15,C17-C22,C26
28	28		1012084-01	8 MFD 25V 6% 30D AL EL (10-12	4	C1,C2,C13,C14
29	29		1005306-00	6.8MFD 35V 10% 150D S.TA (10-00	1	C27
30	30		1105275-00	D 672 TR= 15NS PIV= 60V SP	4	D1,D3-D5

REVISION HISTORY			VARIATIONS FOR THIS ASSY.
CHK	ECO NO	REV	
B.F	00002	C	00

FIRST USED ON:

MADE BY:	F SMART	DATE: 26-MAY-78
CHECKED:	F SMART	DATE: 26-MAY-78
DSN.ENG.:	M MICHAUD	DATE: 26-MAY-78
PROD.:	KM	DATE: 26-MAY-78
RESP.ENG.:	M MICHAUD	DATE: 26-MAY-78

DIGITAL EQUIPMENT CORPORATION
MAYNARD, MASSACHUSETTS

TITLE
PARTS LIST
ASYNCHCHRONOUS LINE INTERFACE

SIZE	CODE	DOCUMENT NUMBER	REV
K	PL	M8028-0-DBP	C

EDIT# 4

ASSY.NO.: D-UA-M8028-0-0

"THIS DRAWING AND SPECIFICATIONS HEREIN, ARE THE PROPERTY OF DIGITAL EQUIPMENT CORPORATION AND SHALL NOT BE REPRODUCED OR COPIED OR USED IN WHOLE OR IN PART AS THE BASIS FOR THE MANUFACTURE OR SALE OF ITEMS WITHOUT WRITTEN PERMISSION.
COPYRIGHT 1978, DIGITAL EQUIPMENT CORPORATION "

LINE	ITEM	DOCUMENT NO.	PART NO.	DESCRIPTION	QTY	REFERENCE DESIGNATORS
31	31		1105610-00	MCL1301 CL@1MA FROM10-80V	1	D6
32	32	(SEE NOTE 68)	1109502-01	Z 6214 VZ= 12.0 2% 1W	1	D2
33	33		1300479-00	10 K 1/4W 5% CC (13-00	9	R1,R11-R15,R18,R19,R42
34	34		1300365-00	1 K 1/4W 5% CC (13-00	7	R7,R8,R16,R35,R36,R38,R24
35	35		1300295-00	330 1/4W 5% CC (13-00	3	R2,R4,R5
36	36		1300229-00	100 1/4W 5% CC (13-00	1	R21
37	37		1301424-00	680 1/4W 5% CC (13-00	3	R3,R6,R29
38	38		1303177-00	2.4 K 1/4W 5% CC (13-00	2	R9,R10
39	39		1300391-00	1.5 K 1/4W 5% CC (13-00	1	R17
40	40		1915249-00	74390 COUNTER,DECADE-DUAL,4BIT	1	E6
41	41		1300316-00	470 1/4W 5% CC (13-00	1	R22
42	42		1312384-05	82 1W 5%	1	R23
43	43		1300271-00	220 1/4W 5% CC (13-00	1	R25
44	44		1301972-00	270 1/4W 5% CC (13-00	1	R26
45	45		1301322-00	180 1/4W 5% CC (13-00	2	R27,R33
46	46		1300316-00	470 1/4W 5% CC (13-00	1	R28
47	47		1300219-00	68 1/4W 5% CC (13-00	1	R30
48	48		1300202-00	47 1/4W 5% CC (13-00	4	R31,R32,R39,R40
49	49		1301327-00	68 K 1/4W 5% CC (13-00	1	R34
50	50		1300432-00	3 K 1/4W 5% CC (13-00	1	R37
51	51		1510706-00	XA 55 PNP 500MW SI 60 50 P	3	Q2-Q4
52	52		1515018-00	2N 2905A PNP 600MW SI 40 100	1	Q1
53	53		1510705-00	XA 05 NPN 500MW SI 60 50 P	2	Q5,Q6
54	54		1602723-02	270 UH 10% 260MA #WEE270	1	L1
55	55		1209941-02	HEADER 100 40POS RT ANGLE $	1	J1
56	56	(SEE NOTE 67)	9009149-01	PIN, STAKING, P.C.BOARD .025 SQUARE	100	
57	57		9008337-06	HANDLE, FLIP CHIP, MAGENTA	1	
58	58		1209941-04	HEADER RT ANGLE,RIGHT LATCH FOR	1	
59	59		1209941-03	HEADER RT ANGLE LEFT LATCH FOR	1	
60	60		1010279-00	.47 MFD 25V 20% 2C023 CER.$	1	C16
61	61		9009781-00	SPACER, MODULE, MAGENTA	1	
62	62		9105740-55	WIRE(WRAP)30AWG UL1423 (91-00 A/R		
63	63	D-MD-5012611-0-0	5012611-00	M8028	1	
64	64		9007201-00	TRANSIPADS #10253	1	
65	65		9006732-00	EYELET, ROLLED FLANGE, .121 OD X .219 LG	4	

66 NOTE: IF 1913414 IS NOT AVAILABLE, USE 1911324(7414)
67 NOTE: IF 9009149-01 IS NOT AVAILABLE, USE 9009149-00.
68 NOTE: THIS PART IDENTIFIES THE CATHODE WITH A SILVER BAR

DIGITAL EQUIPMENT CORPORATION MAYNARD, MASSACHUSETTS	TITLE PARTS LIST ASYNCHCHRONOUS LINE INTERFACE	SIZE K	CODE FL	DOCUMENT NUMBER M8028-0-DBF	REV C

"THIS DRAWING AND SPECIFICATIONS, HEREIN, ARE THE PROPERTY OF DIGITAL EQUIPMENT CORPORATION AND SHALL NOT BE REPRODUCED OR COPIED OR USED IN WHOLE OR IN PART AS THE BASIS FOR THE MANUFACTURE OR SALE OF ITEMS WITHOUT WRITTEN PERMISSION.
COPYRIGHT © 1977 , DIGITAL EQUIPMENT CORPORATION"

BAUD RATE SELECT JUMPERS					
RECEIVER	(R3)	(R2)	(R1)	(RØ)	BAUD
TRANSMITTER	(T3)	(T2)	(T1)	(TØ)	RATE
	I	I	I	I	50
	I	I	I	R	75
	I	I	R	I	110 * RECEIVER
	I	I	R	R	134.5
	I	R	I	I	150
	I	R	I	R	300
	I	R	R	I	600
	I	R	R	R	1200
	R	I	I	I	1800
	R	I	I	R	2000
	R	I	R	I	2400
	R	I	R	R	3600
	R	R	I	I	4800
	R	R	I	R	7200
	R	R	R	I	9600 * TRANSMITTER
	R	R	R	R	19200

I ; INSTALLED R ; REMOVED

SEE NOTE 2

DEVICE ADDRESS JUMPERS		
JUMPERS IN	JUMPERS OUT	ADDRESS
A4, A5, A6, A8 A9, A10, A11, A12	A3, A7	CONSOLE ADDRESS 17756X *
A3, A7, A8 A9, A11, A12	A4, A5, A6 A10	DLVII-F UNIT #1 17561X

ADDRESS SETUP DIAGRAM ← SEE NOTE #3

15	14	13	12	11	10	9	8	7	6	5	4	3	2	1	Ø

SEE NOTE 2

VECTOR ADDRESS JUMPERS		
JUMPERS IN	JUMPERS OUT	ADDRESS
V4, V5	V3, V6, V7 V8	CONSOLE 60, 64 *
V6, V7	V3, V4, V5 V8	DLVII-F UNIT #1 300, 304

VECTOR SETUP DIAGRAM ← SEE NOTE #3

15	14	13	12	11	10	9	8	7	6	5	4	3	2	1	Ø

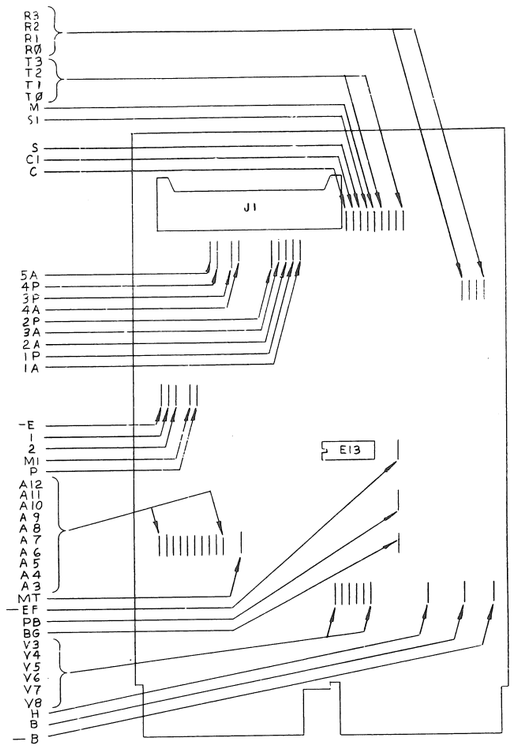

MISCELLANEOUS JUMPERS		
JUMPERS IN	JUMPERS OUT	FEATURE
1.2		5 DATA BITS
1	2	6 DATA BITS
2	1	7 DATA BITS
	1.2	8 DATA BITS *
P		PARITY CHECK
	P	NO PARITY CHECK *
-E		ODD PARITY
	-E	EVEN PARITY *
PB		PROG. BAUD RATES ENAB
	PB	PROG. BAUD RATES DISAB *
BG		BREAK GENERATION ENAB *
	BG	BREAK GENERATION DISAB
C,C1	S,S1	COMMON SPEED *
S,S1	C,C1	SPLIT SPEED
H		HALT ON FRAMING ERROR *
	H	NO HALT ON FRAMING ERROR
B	-B	BOOT ON FRAMING ERROR
-B	B	NO BOOT ON FRAMING ERROR *
-EF		ERROR FLAGS DISABLED *
	EF	ERROR FLAGS ENABLED
1A, 2A, 3A	1P, 2P	ACTIVE RECIEVE 20 MA CURRENT LOOP *
1P, 2P	1A, 2A, 3A	PASSIVE RECIEVE 20 MA CURRENT LOOP
4A, 5A	3P, 4P	ACTIVE TRANSMIT 20 MA CURRENT LOOP *
3P, 4P	4A, 5A	PASSIVE TRANSMIT 20 MA CURRENT LOOP
	M, M1	FACTORY USE ONLY *
MT		MAINTENANCE BIT ENABLED
	MT	MAINTENANCE BIT DISABLED *

NOTES:

1. * MODULE SHIPPED FROM FACTORY IN THIS CONFIGURATION.
2. CONFIGURATIONS SHOWN FOR DEVICE AND VECTOR ADDRESSES ARE ONLY A FEW EXAMPLES. FOR A COMPLETE LIST SEE DLVII-E/ DLVII-F USERS MANUAL.
3. ADDRESS SETUP DIAGRAMS PROVIDED FOR USERS CONVENIANCE.

REVISIONS			
CHK	CHANGE NO.	REV.	
JA	M8028-00001	B	
	M8028-00002	C	

M. MICHAUD
J. CURTIS

DRN.		
CHK'D	J. Smart	8-3-77
ENG.		
PROJ. ENG.		
PROD.		
NEXT HIGHER ASSY.		
SCALE	—	
SHEET 1 OF 6		

FIRST USED ON

digital

TITLE ASYN LINE INTERFACE

SIZE	CODE	NUMBER	REV.
D	CS	M8028-Ø-1	C

DIST.

"THIS DRAWING AND SPECIFICATIONS, HEREIN, ARE THE PROPERTY OF DIGITAL EQUIPMENT CORPORATION AND SHALL NOT BE REPRODUCED OR COPIED OR USED IN WHOLE OR IN PART AS THE BASIS FOR THE MANUFACTURE OR SALE OF ITEMS WITHOUT WRITTEN PERMISSION.
COPYRIGHT © 1976, DIGITAL EQUIPMENT CORPORATION"

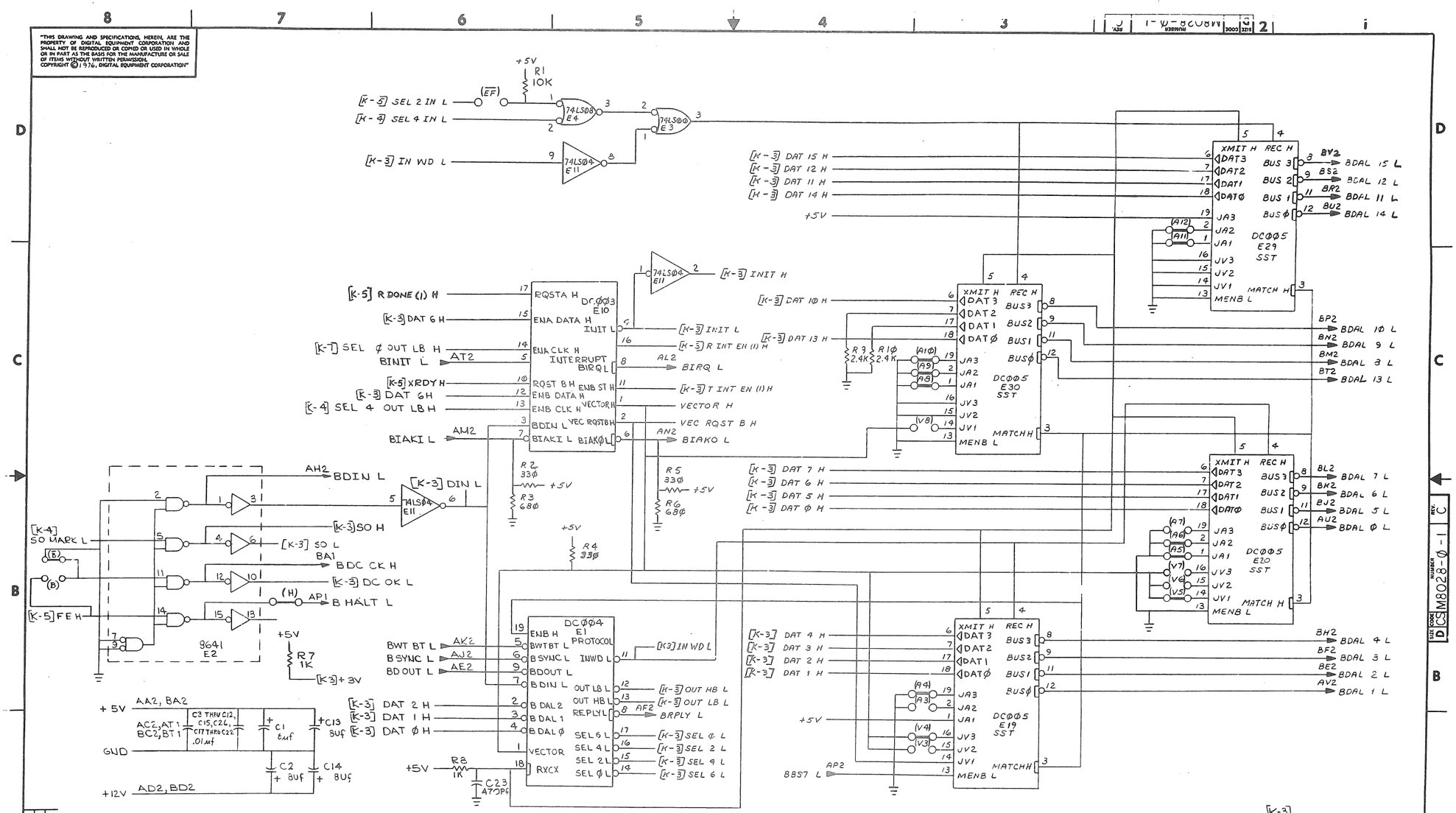

DRN.	FIRST USED ON [K-3]
CHK'D	digital
ENG.	TITLE ASYNC LINE INTERFACE (BUS RECEIVERS & DRIVERS)
PROJ. ENG.	
PROD.	
NEXT HIGHER ASSY.	
SCALE —	SIZE D CODE CS NUMBER M8028-0-1 REV. C
SHEET 2 OF 6	DIST.

REVISIONS — CHANGE NO. — REV. — CHK

DEC FORM NO. DRD 102-0

"THIS DRAWING AND SPECIFICATIONS, HEREIN, ARE THE PROPERTY OF DIGITAL EQUIPMENT CORPORATION AND SHALL NOT BE REPRODUCED OR COPIED OR USED IN WHOLE OR IN PART AS THE BASIS FOR THE MANUFACTURE OR SALE OF ITEMS WITHOUT WRITTEN PERMISSION. COPYRIGHT © 1976 DIGITAL EQUIPMENT CORPORATION"

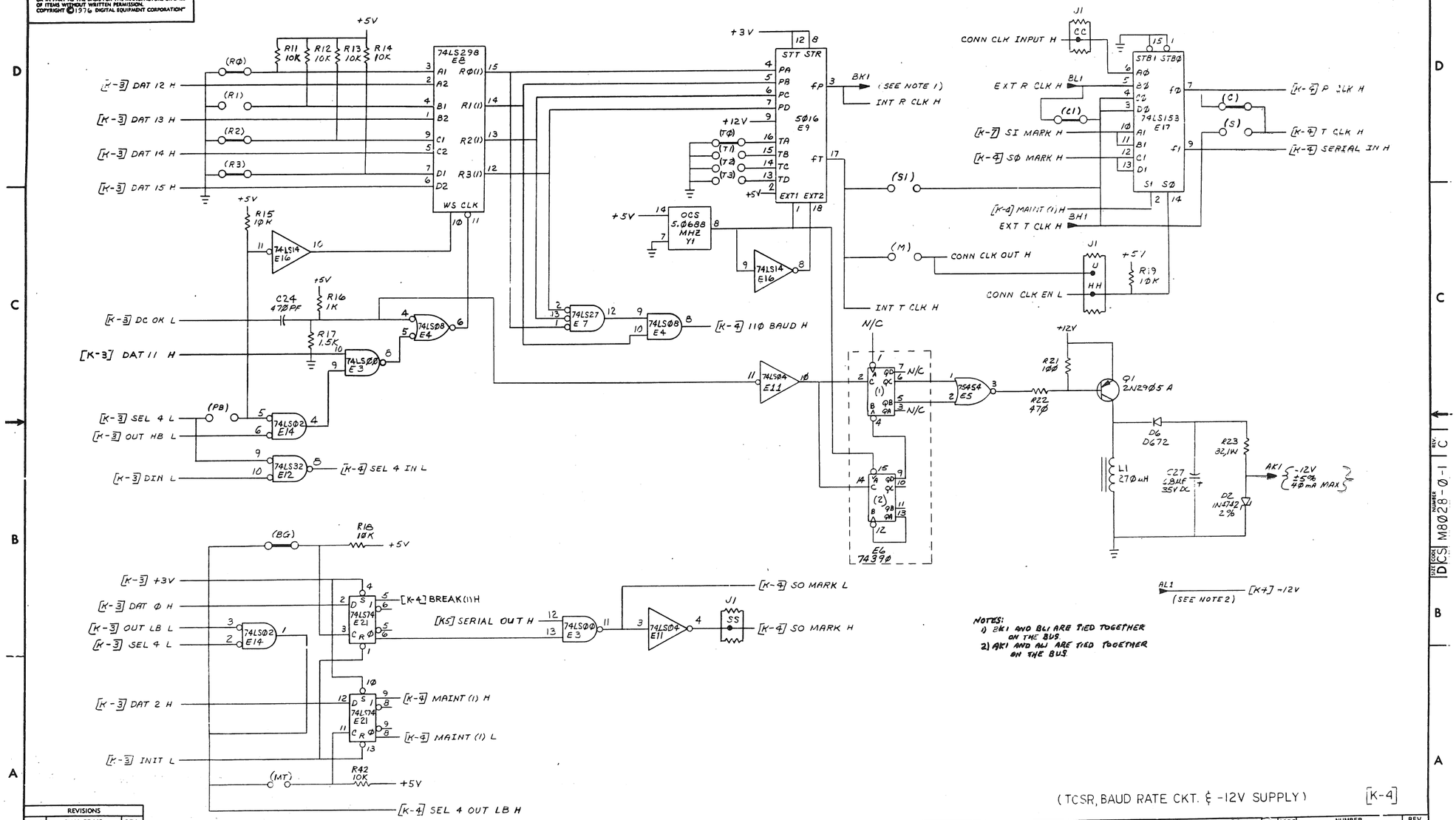

(TCSR, BAUD RATE CKT. & -12V SUPPLY) [K-4]

REVISIONS		
CHK	CHANGE NO.	REV.

TITLE	SIZE	CODE	NUMBER	REV.
ASYN LINE INTERFACE	D	CS	M8Ø28-Ø-1	C
SCALE —	SHEET 3 OF 6	DIST.		

DEC FORM NO. 6000 1Ø8

"THIS DRAWING AND SPECIFICATIONS, HEREIN, ARE THE PROPERTY OF DIGITAL EQUIPMENT CORPORATION AND SHALL NOT BE REPRODUCED OR COPIED OR USED IN WHOLE OR IN PART AS THE BASIS FOR THE MANUFACTURE OR SALE OF ITEMS WITHOUT WRITTEN PERMISSION. COPYRIGHT © 1976 DIGITAL EQUIPMENT CORPORATION"

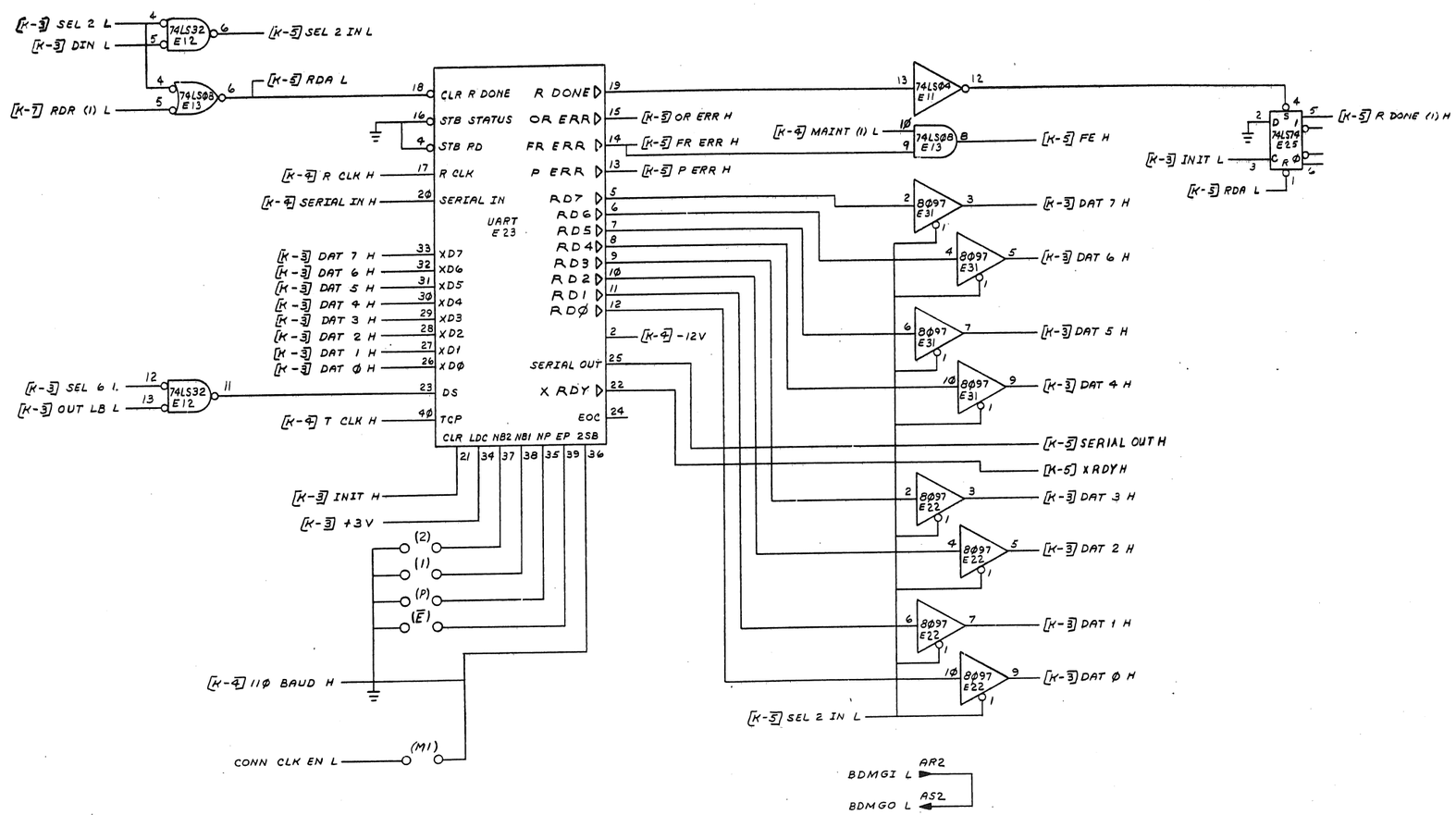

(UART CKT)

[K-5]

REVISIONS		
CHK	CHANGE NO.	REV.

TITLE	SIZE	CODE	NUMBER	REV.
ASYN LINE INTERFACE	D	CS	M8Ø28-Ø-1	C

SCALE — SHEET 4 OF 6 DIST.

"THIS DRAWING AND SPECIFICATIONS, HEREIN, ARE THE PROPERTY OF DIGITAL EQUIPMENT CORPORATION AND SHALL NOT BE REPRODUCED OR COPIED OR USED IN WHOLE OR IN PART AS THE BASIS FOR THE MANUFACTURE OR SALE OF ITEMS WITHOUT WRITTEN PERMISSION. COPYRIGHT © 1976 DIGITAL EQUIPMENT CORPORATION"

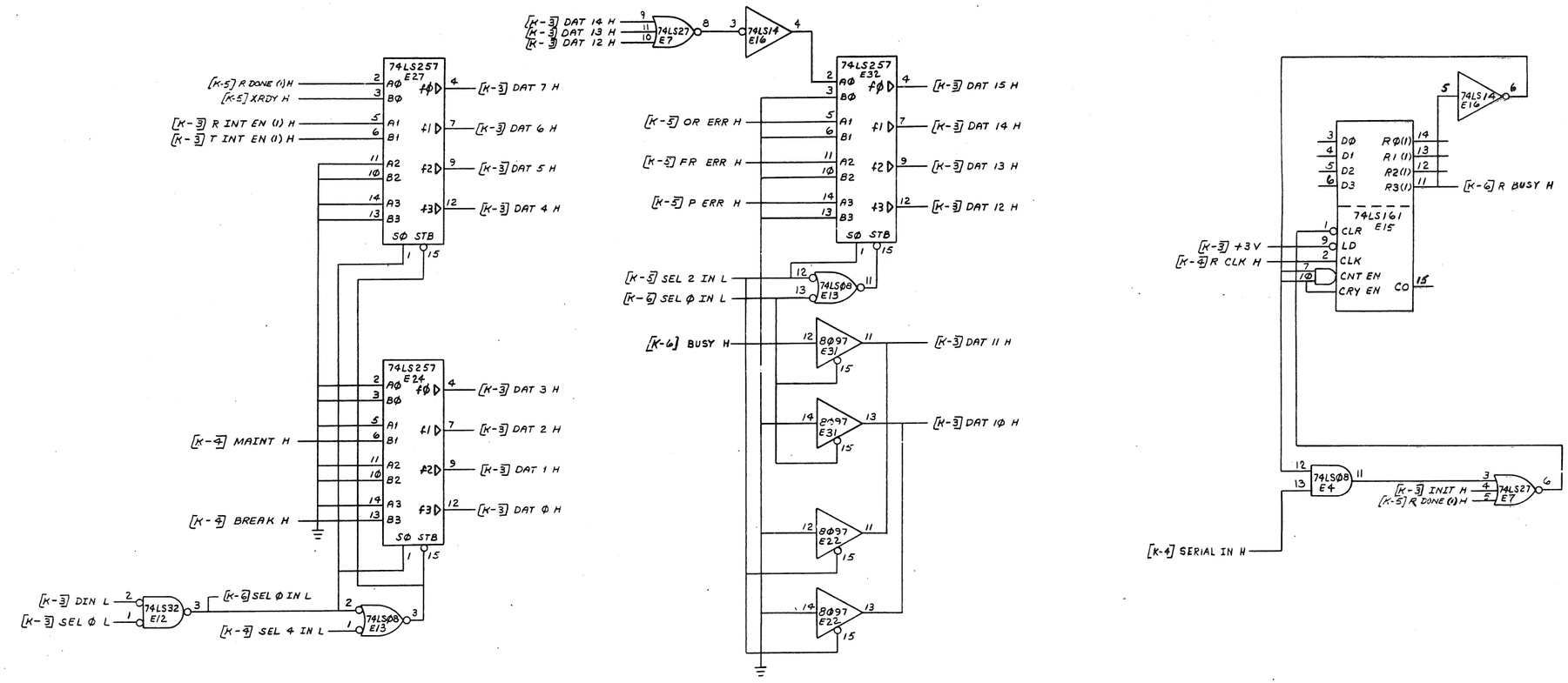

(INTERNAL BUS DRIVERS & RCVR BUSY CKT) [K-6]

REVISIONS		
CHK	CHANGE NO.	REV.

TITLE	SIZE	CODE	NUMBER	REV.
ASYN LINE INTERFACE	D	CS	M8Ø28-Ø-1	C
SCALE —	SHEET 5 OF 6	DIST.		

DEC FORM NO. DRD 130

"THIS DRAWING AND SPECIFICATIONS, HEREIN, ARE THE PROPERTY OF DIGITAL EQUIPMENT CORPORATION AND SHALL NOT BE REPRODUCED OR COPIED OR USED IN WHOLE OR IN PART AS THE BASIS FOR THE MANUFACTURE OR SALE OF ITEMS WITHOUT WRITTEN PERMISSION. COPYRIGHT © 1976 DIGITAL EQUIPMENT CORPORATION"

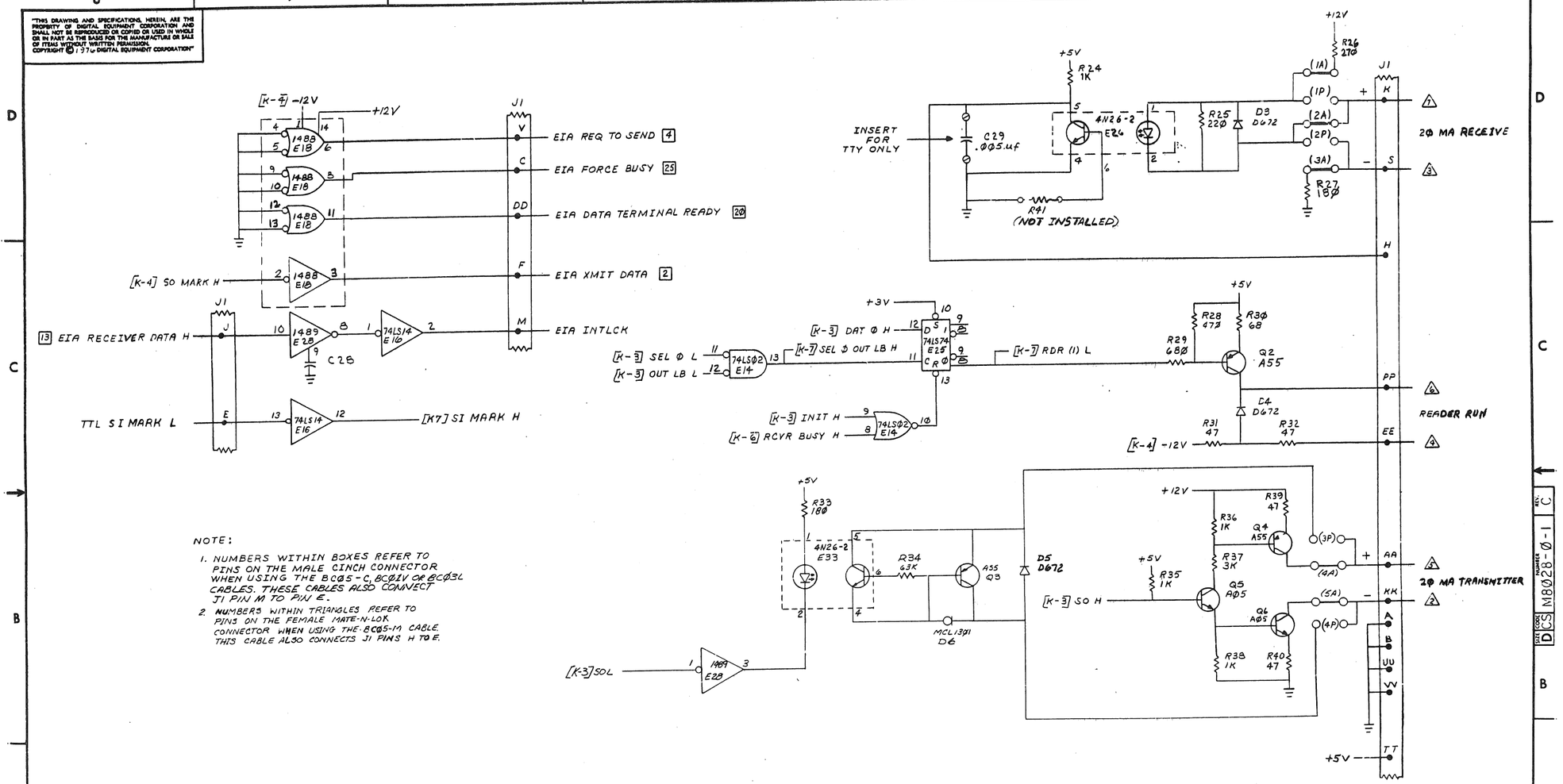

NOTE:

1. NUMBERS WITHIN BOXES REFER TO PINS ON THE MALE CINCH CONNECTOR WHEN USING THE BC05-C, BC01V OR BC03L CABLES. THESE CABLES ALSO CONNECT J1 PIN M TO PIN E.
2. NUMBERS WITHIN TRIANGLES REFER TO PINS ON THE FEMALE MATE-N-LOK CONNECTOR WHEN USING THE BC05-1A CABLE. THIS CABLE ALSO CONNECTS J1 PINS H TO E.

(CURRENT LOOP CKT) [K-7]

REVISIONS		
CHK	CHANGE NO.	REV.

TITLE	SIZE	CODE	NUMBER	REV.
ASYN LINE INTERFACE	D	CS	M8028-0-1	C
SCALE —H—	SHEET 6 OF 6	DIST.		

DEC FORM NO. 080 130

DIGITAL EQUIPMENT CORPORATION
MAYNARD, MASSACHUSETTS
PARTS LIST

MADE BY M. MICHAUD	CHECKED D. HEALY	SECTION 1
DATE 11 AUG 77	DATE 11 AUG 77	
ENG M D Michaud	PROD	ISSUED SECT. 1
DATE 18 Aug 77	DATE 8-19-77	

ITEM NO.	DWG NO./PART NO.	DESCRIPTION	DLV11-F	DLV11-FA	DLV11-FB
1	MP00461	PRINT SET, DLV11-F	1	1	1
2	ZJ-253-RB	DIAGNOSTIC KIT, DLV11-F (see note)	1	1	1
3	EK-DLV11-OP-001	DLV11-E & F USERS MANUAL (see note)	1	1	1

NOTE: For DCG and OEM customers, these Items are shipped on initial orders only.

TITLE	ASSY NO	SIZE	CODE	NUMBER	REV	ECO NO.
SHIPPING LIST, DLV11-F	NONE	A	PL	DLV11-F	A	DLV11F-00001
	SHEET 1 OF 1	DIST				

DEC FORM DRA 110

SIZE	CODE	NUMBER	REV.
B	UA	BCØ5M-Ø-Ø	A

This drawing and specifications, herein, are the property of Digital Equipment Corporation and shall not be reproduced or copied or used in whole or in part as the basis for the manufacture or sale of items without written permission. COPYRIGHT © 1973

DIGITAL EQUIPMENT CORPORATION

LEGEND		
NUMBER	VARIATION	
	LENGTH	ITEM #1
BCØ5M-2C	27 IN.	7008360
BCØ5M-04	48 IN.	7008360-1

NOTES:

1. FOR ASSEMBLY SEE D-IA-7008360-0-0.

SEE NOTE #1

QTY.	DESCRIPTION	PART NO.	ITEM NO.
1	CABLE ASSY.	SEE LEGEND	1

PARTS LIST

REVISIONS			
CHK	CHANGE NO.	REV.	
JS	BCØ5M-0000	A	
	J. Chador 1-19-76		
	M.E. LEWANDOWSKI		
	M.E. Lewandowski 1-22-76		

FIRST USED ON OPTION/MODEL: —#—

UNLESS OTHERWISE SPECIFIED DIMENSION IN INCHES

TOLERANCES

DECIMALS	ANGLES
.xxx = .005 .xx = .02 .x = .1	±0° 30'

REMOVE BURRS AND BREAK SHARP CORNERS SURFACE QUALITY √

MATERIAL: SEE PARTS LIST

FINISH: —/—/—

		DATE
DRN.	D. Williams	11-16-73
CHK'D.	R. Cook	1-9-74
ENG.	R. Regan	1/4/74
PROJ. ENG.	R. Regan	1/4/74
PROD.	S. Dione	1/4/74

NEXT HIGHER ASSY.: —#—

SCALE: —/—/—

SHEET 1 OF 1

digital EQUIPMENT CORPORATION
MAYNARD, MASSACHUSETTS

TITLE: BCØ5M CABLE ASSEMBLY (KL8-E, KL8-JA)

SIZE	CODE	NUMBER	REV.
B	UA	BCØ5M-Ø-Ø	A

DIST.

DEC 16-(325)-1080-1A-R373
DR8 100

"THIS DRAWING AND SPECIFICATIONS, HEREIN, ARE THE PROPERTY OF DIGITAL EQUIPMENT CORPORATION AND SHALL NOT BE REPRODUCED OR COPIED OR USED IN WHOLE OR IN PART AS THE BASIS FOR THE MANUFACTURE OR SALE OF ITEMS WITHOUT WRITTEN PERMISSION. COPYRIGHT © 1975, DIGITAL EQUIPMENT CORPORATION"

WIRE TABLE

ITEM NO	DESCRIPTION AWG	COLOR	FROM CONNECTION	WITH	TO CONNECTION	WITH
3	22	BLK	P1-VV	7	P2-7	SOLDER
		GRN/WHT	P1-C		P2-25	
		GRN/BLK	P1-JJ		P2-12	
		ORN/BLK	P1-FF		P2-11	
		RED	P1-DD		P2-20	
		GRN	P1-BB		P2-8	
		BLU/WHT	P1-Z		P2-6	
		ORN	P1-X		P2-22	
		BLU	P1-V		P2-4	
		WHT	P1-T		P2-5	
		BLU/BLK	P1-R		P2-17	
		BLK/WHT	P1-N		P2-15	
		RED/WHT	P1-L		P2-24	
		WHT/BLK	P1-J		P2-3	
3		RED/BLK	P1-F		P2-2	SOLDER
8		BLK	P1-E	7	P1-M	7
8	22	BLK	P2-1	SOLDER	P2-7	SOLDER

LEGEND

NUMBER	VARIATION DIM "X"	DIM "Y" PRECUT
BCØ3L-1Ø	1ØFT ± 2IN	1ØFT, 5IN
BCØ3L-5	5FT ± 2IN	5FT, 5IN
BCØ3L-1K	1FT 9IN ± 1IN	2FT
BCØ3L-Ø1	1FT ±1IN	1FT, 3IN

NOTES:

1. EACH SOLDERED CONN ON P2 SHALL BE INSULATED WITH A .25 PIECE OF SHRINK TUBING (ITEM #5)
2. PLACE ITEM #9 (THIS SIDE UP STICKER) ON LETTERED SIDE OF ITEM #4 (CONN HOUSING) AS SHOWN.
3. FOR STRAIN RELIEF WRAP 2 TURNS OF TAPE (ITEM #6) AROUND CABLE (ITEM #3) AS SHOWN.
4. PINS MARKED * IN VIEW B-B ARE NOT USEABLE
5. *WIRES COMING FROM CENTER OF PLUG CONN SHOULD BE 5/8" LG., ALL OTHERS SHOULD BE CONFINED INTO HOOD OF CONN. SO THAT THEY'RE NOT BUNCHED.*
6. PLACE LOCKWASHER (SUPPLIED WITH ITEM #10) BETWEEN SPACER AND CONNECTOR FLANGE. DISCARD NUT (QTY.2) SUPPLIED WITH ITEM #10

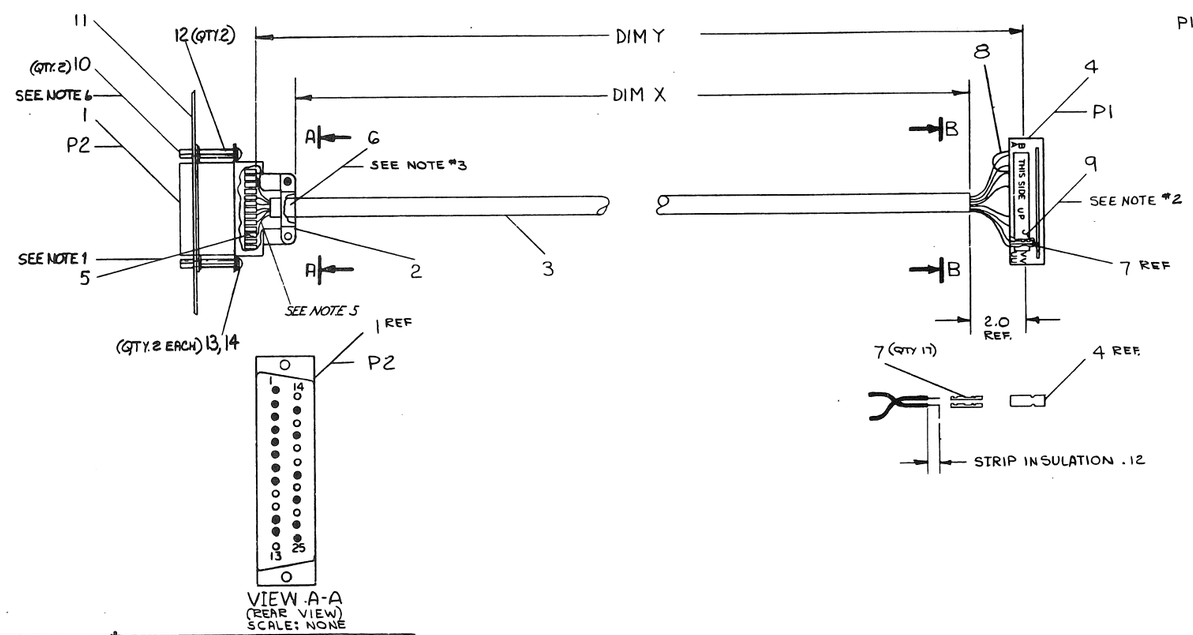

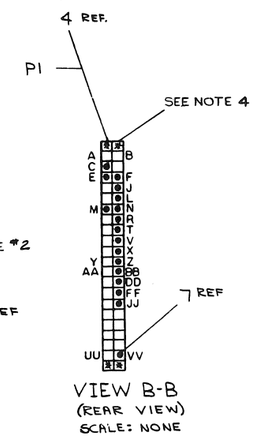

2	WASHER, LOCK #4	9006688	14
2	SCR, PHL PAN HD #4-40 X .25	9008301-1	13
2	SPACER, THREADED, HEX	9008833	12
1	PLATE, CONN. MTG.	B-MD-7414072-00	11
2	SCREW LOCK ASSY	9008451-00	10
1	LABEL (THIS SIDE UP)	3611567	9
3IN	WIRE, STRANDED #22 AWG IPVC (BLK)	9107350-00	8
17	SOCKET, CRIMP	1210089-07	7
A/R	TAPE, DOUBLE SIDED .50 W D.	9007834	6
16	TUBING, HEAT SHRINK .12	9107255-09	5
1	CONN, 44 POS, HSG.	1210918-15	4
A/R	CABLE, 15 COND., 22 AWG.	9107672-00	3
1	HOOD, CONN.	1212516-00	2
1	CONNECTOR, PLUG, FILTERED	1214031-00	1

DESCRIPTION	DWG./PART NO.	ITEM NO.

UNLESS OTHERWISE SPECIFIED DIMENSIONS ARE IN INCHES

ANGLES 10' 30'	CLASS OF ACCURACY (CHECK ONE)	NOMINAL LENGTH RANGE INCHES OVER 0 TO 0.3	OVER 0.3 TO 1.2	OVER 1.2 TO 4.0	OVER 4.0 TO 12.0	OVER 12.0 TO 40.0	OVER 40.0 TO 80.0
SURFACE QUALITY IN MICROINCHES	MEDIUM ☐	±.004	±.008	±.012	±.016	±.024	±.04
	PREFERRED ☐	±.012	±.016	±.025	±.04	±.063	±0.1

QUANTITY & VARIATION

THIRD ANGLE PROJECTION

REMOVE BURRS AND BREAK SHARP CORNERS

DO NOT SCALE DWG

MATERIAL SEE PARTS LIST

FINISH

DRN
CHK
ENG
PROJ ENG
PROD

FIRST USED ON

NEXT HIGHER ASSY.

SCALE 1/1

SHEET 1 OF 1

digital

TITLE FILTERED CABLE ASSY BCØ3L

SIZE D | CODE UA | NUMBER BCØ3L-Ø Ø | REV. F

DIST.

REVISIONS	CHANGE NO.	REV.
	BCØ3L-00002	A
	BCØ3L-00003	B
	BCØ3L-00004	C
	BCØ3L-00005	D
	BCØ3L-00006	E
	BCØ3L-MK0007	F

CHK

OSC FORM NO.

B. SAMPSON 10-13-75
M.E. WANDOWSKI
R. SAMPSON 5-Oct-76
T. ORR 22-Mar-77
T. ORR 2 Sept 77
T. ORR 18 Sept 77
T. ORR 3 Sept 78
T. ORR 9 Oct 78