FIELD MAINTENANCE PRINT SET

TABLE OF CONTENTS

B-TC-FP11-AU-2	FLOATING POINT OPTION UPGRADE KIT (TC)
E-UA-FP11-AU-Ø	FLOATING POINT OPTION UPGRADE KIT
D-MU-FP11-AU-1	FLOATING POINT OPTION UPGRADE KIT
MPØØ192	PRINT SET KD11-EA (COMPLETE SET)
MPØØ189	PRINT SET FP11-A (COMPLETE SET)
MPØØ271	PRINT SET H7441 (COMPLETE SET)
D-CS-5410864-0-1	POWER DISTRIBUTION BOARD
A-SP-3700270-0-0	FP11-AU SHIPPING PACKAGING SPECIFICATION
A-PL-FP11-AU-3	SHIPPING LIST (FP11-AU)

UNIT VARIATIONS COVERED BY THIS PRINT SET
FP11-AU

FP11-AU

Field Maintenance Print Set

Digital Equipment Corporation

PRINT SET ORDER NO.
MPØØ188

REVISIONS		
REV.		
CHG. NO.		
DATE		

USED ON OPTION/MODEL	
1134A	

SHEET I OF 1

DRN.	D. HEALY	DATE	OCT 76
CHK'D	D. HEALY	DATE	OCT 76
PROJ. ENG.		DATE	20 DEC 76
FIELD SERV		DATE	12-22-76

digital

TITLE: FLOATING POINT OPTION UPGRADE KIT

SIZE	CODE	NUMBER	REV.
B	TC	FP11-AU-2	

DIST.

DRB 124

NOTES:

1. THE CABLES AND M7859 CONTROL BD. ARE PART OF THE KY11-LB OPTION AND MAY NOT BE PRESENT IN SOME 11/34 CONFIGURATIONS.
2. THE W9042 EXTENDER BD. ASSEMBLY IS STORED IN THE BACKPLANE AND IS USED FOR SOME MAINTENANCE OPERATIONS; SEE D-UA-FP11-A-Ø.
3. THE CABLES ARE INSTALLED DURING MAINTENANCE ONLY AND ARE CLIPPED TO THE W9042 FOR STORAGE.
4. ITEMS #3 & 4 NOT SHOWN ON THIS ASSY.

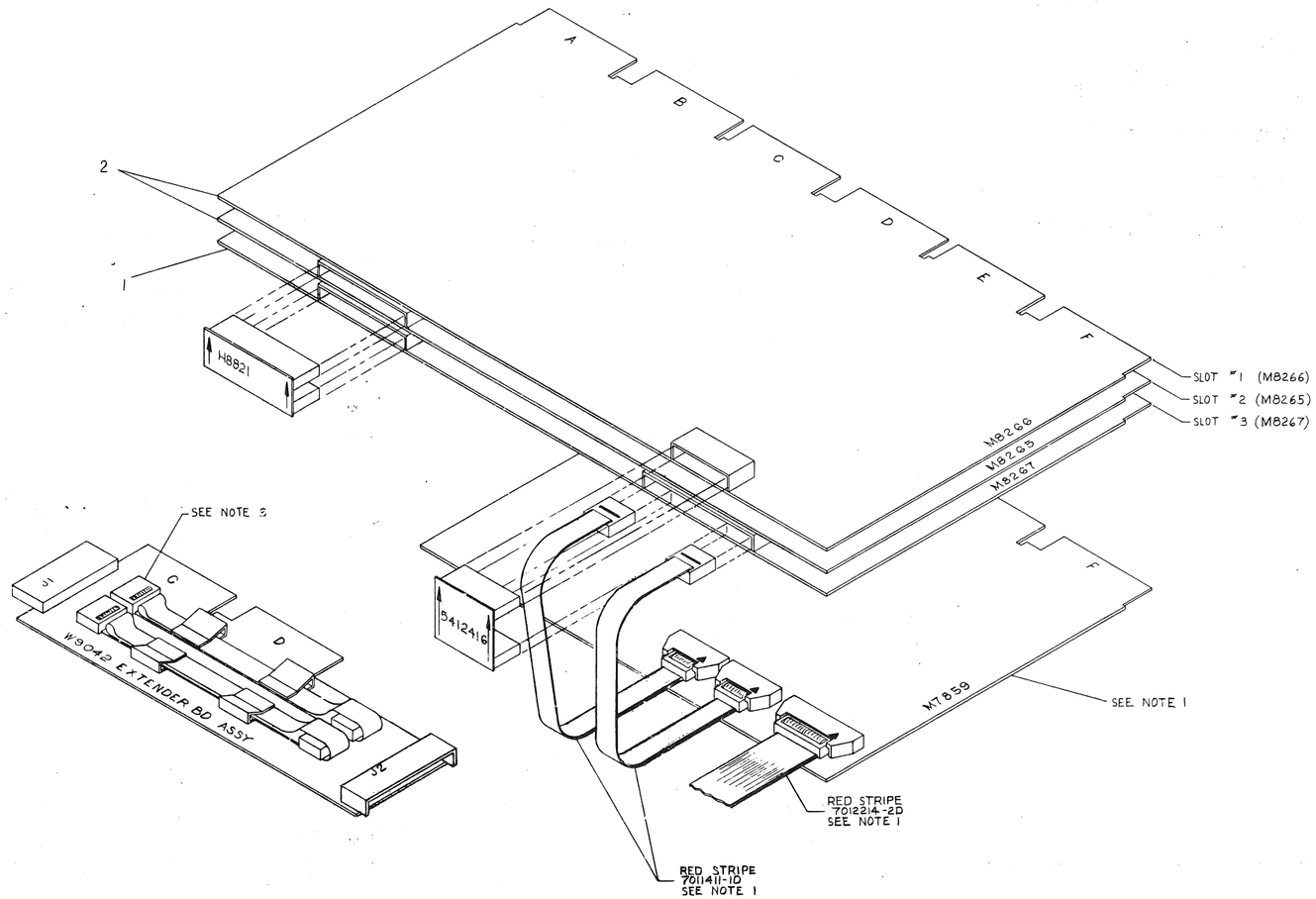

REF	DESCRIPTION	DWG/PART NO	ITEM NO
	MODULE UTILIZATION	D-MU-FP11-AU-1	5
1	POWER DISTRIBUTION BOARD	D-CS-5410(2)-A-1A-1	4
1	+5V REGULATOR	D-UA H7444-Ø-Ø	3
1	1134A PROCESSOR	A-PL-KD11-EA-Ø	2
1	FLOATING POINT OPTION	D-UA-FP11-A-Ø	1

QUANTITY & VARIATION

UNLESS OTHERWISE SPECIFIED DIMENSIONS ARE IN INCHES

ANGLES ±0°30' — SURFACE QUALITY IN MICROINCHES — ALL OF ACCURACY (CHECK ONE): MEDIUM ☐ PREFERRED ☐

NOMINAL DIMENSION RANGE INCHES	OVER 0 TO 2.0	OVER 2.0 TO 7.0	OVER 7.0 TO 12.0	OVER 12.0 TO 48.0	OVER 48.0 TO 96.0
MEDIUM	±.005	±.008	±.012	±.016	±.024	±.04
PREFERRED	±.012	±.016	±.04	±.005	±.01

THIRD ANGLE PROJECTION

REMOVE BURRS AND BREAK SHARP EDGES

DO NOT SCALE DRAWING

MATERIAL: SEE PARTS LIST

FINISH

DRN. [illegible] 4-Dec-76
CHKT [illegible] 4-Dec-76
ENG [illegible] 15-Dec-76
PRODUCT [illegible] 30-Dec-76
PRODUCTION [illegible] 11-Mar-77

FIRST USED ON: 1134A

digital

TITLE: FLOATING POINT OPTION UPGRADE KIT

D-UA-FP11-A-Ø

SCALE 1/1

SHEET 1 OF 1

SIZE B | CODE UA | NUMBER FP11-AU-Ø | REV.

DIST.

DEC FORM NO. DNE 320-0

REVISIONS: REV. | CHANGE NO. | CHK

NOTE:

THIS MODULE UTILIZATION DRAWING SHOULD BE USED AS A CONFIGURATION GUIDE ONLY FOR 11/34 SYSTEMS THAT REQUIRE THE FP11-AU (eg. 10.50 BOX 11/34 SYSTEMS' WITH A KD11-E PROCESSOR (M7265 AND M7266) THAT CAN SUPPLY ONLY 25A @+5VDC TO THE DD11-P BACKPLANE). THE M8266 (WHICH REPLACES THE M7266 , M8265 (WHICH REPLACES THE M7265), AND THE M8267 (FP11-A) , MUST OCCUPY THE FIRST THREE HEX SLOTS, WHILE THE M9301 MUST OCCUPY AN ADJACENT MODIFIED UNIBUS SLOT. THESE MODULES CONSUME 20.5 @+5VDC LEAVING ONLY 4.5A @+5VDC FOR OTHER SYSTEM AND USER OPTIONS. IT IS FOR THIS REASON THAN AN H7441 REGULATOR 32A @+5VDC AND 5410864-YA POWER DISTRIBUTION BOARD ARE INCLUDED IN THE FP11-AU. THE INCREASED AVAILABILITY OF CURRENT DUE TO THE H7441 REGULATOR ONLY PARTIALLY MITIGATES THE INCREASED CONSUMPTION OF CURRENT BY M8265, M9266, AND M8267 MODULES.

THE EXISTANCE OF ADDITIONAL MODULES MAY REQUIRE THAT THE MEMORIES, M9302, AND M7850 MODULES BE MOVED TO AN ADDITIONAL BACKPLANE.

NOTES

1. NO VARIATION OF THE FP11-AU IS AVAILABLE FOR USE WITH 5.25" BOX 11/34 SYSTEMS.
2. CONSULT D-MU-DD11-P-2 TO DETERMINE HOW THE DD11-P SLOTS ARE WIRED.
3. THE CURRENTS LISTED ARE FOR REFERENCE ONLY. ACTUAL CURRENT CONSUMPTION MAY VARY
4. NO MAJOR CONFIGURATION CHANGES ARE NECESSARY ADDITIONAL MODULES MAY REQUIRE ANOTHER BACKPLANE
5. THE W9042 EXTENDER BOARD SHOULD BE STORED IN THE BACKPLANE IN PLACE OF ONE OF THE G727 GRANT CONTINUITY CARDS
6. BATI-K'S THAT USE THE 5410864-YA-1 POWER DISTRIBUTION (I.E. 11/34A, 11/34 WITH FP11-AU, AND SOME 11/04'S) AND HAVE ONE DD11-DK OR AN ADDITIONAL DD11-DK) CAN ONLY HAVE THE +5 TO +5B JUMPER IN ONE OF THE BACK PANELS IF TWO OF THE BACK PANELS HAVE THE JUMPER IN, THE +5V REGULATORS MAY BE CONNECTED TOGETHER TYPICALLY THIS JUMPER IS IN THE FIRST BACK PANEL BUT IT MAY BE PLACED IN ONE OF THE OTHER BACK PANELS IF DEEMED NECESSARY FOR POWER REQUIREMENTS
7. EITHER M9301 OR M9312 MAY BE USED BUT NOT BOTH.

		M7265/M7266 (10.5 A)	M8265/M8266 (11.5 A)	M8267 (7.0 A)	M9301 (2.0 A) SEE NOTE 7	M9302 (1.2 A)	M7850 (1.0 A)	DL11-W (2.0 A)	KY11-LB (3.0 A)	MS11-E (2.0 A)	MM11-D (3.0 A)	G727 (0.0 A)	TOTAL +5VDC CURRENT WITH M7265, M7266	TOTAL +5VDC CURRENT WITH M8265, M8266, M8267	NOTE: TOTAL +5VDC CURRENT WITH M9302, M7850, AND MEMORIES MOVED TO ANOTHER BACKPLANE.
5.25" BOX	11/34-DC(D)	1	-	-	1	1	1	-	-	1	-	6	16.7	-	1 -
	11/34-HC(D)	1	-	-	1	1	1	-	-	-	1	6	17.7	-	1 -
	11/34-LC(D)	1	-	-	1	1	1	-	-	2	-	5	18.7	-	1 -
	11/34-MC(D)	1	-	-	1	1	1	-	-	-	2	5	20.7	-	1 -
10.5" BOX	11/34-LH(J)	1	-	-	1	1	1	-	-	2	-	5	18.7	26.7	4 20.5
	11/34-DH(J)	1	-	-	1	1	1	-	-	1	-	6	16.7	24.7	4 20.5
	11/34-MH(J)	1	-	-	1	1	1	-	-	-	2	5	20.7	28.7	4 20.5
	11/34-HH(J)	1	-	-	1	1	1	-	-	-	1	6	17.7	25.7	4 20.5
	11/34-LM(N)	1	-	-	1	1	1	1	-	2	-	4	20.7	28.7	4 22.5
	11/34-DM(N)	1	-	-	1	1	1	1	-	1	-	5	18.7	26.7	4 22.5
	11/34-MM(N)	1	-	-	1	1	1	1	-	-	2	4	22.7	30.7	4 22.5
	11/34-HM(N)	1	-	-	1	1	1	1	-	-	1	5	19.7	27.7	4 22.5

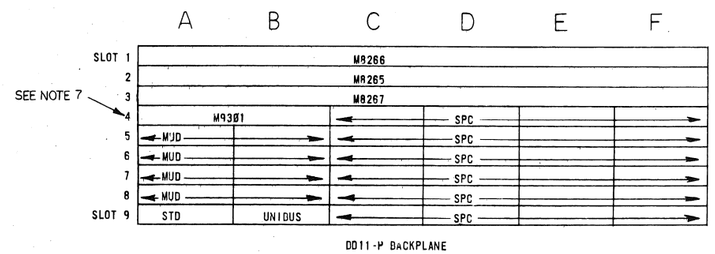

REVISIONS			
CHK	CHANGE NO.	REV.	
	FP11-AU-00002	A	
		B	

DEC FORM NO. BRB 180-C

	DESCRIPTION	DWG./PART NO.	ITEM NO.
QUANTITY & VARIATION	UNLESS OTHERWISE SPECIFIED DIMENSIONS ARE IN INCHES		

ANGLES ±0° 30'	CLASS OF ACCURACY (CHECK ONE)	NOMINAL DIMENSION RANGE INCHES: OVER 0 TO 0.2	OVER 0.2 TO 1.2	OVER 1.2 TO 4.0	OVER 4.0 TO 12.0	OVER 12.0 TO 40.0	OVER 40.0 TO 80.0
SURFACE QUALITY IN MICROINCHES	MEDIUM	±.004	±.008	±.012	±.016	±.024	±.04
	PREFERRED	±.012	±.016	±.025	±.04	±.063	±.1

THIRD ANGLE PROJECTION

REMOVE BURRS AND BREAK SHARP CORNERS

DO NOT SCALE DWG

MATERIAL

FINISH

DRN. J. Blackstone	14 DEC 76	
CHK'D J. Hardy	16 DEC 76	
ENG.	16 DEC 76	
PROJ. ENG.		
PROD.	21 Dec 76	
NEXT HIGHER ASSY.	B-DD-FP11-AU	
SCALE NONE		
SHEET 1 OF 2		

FIRST USED ON 1134

digital

TITLE MODULE UTILIZATION FP11-AU

SIZE	CODE	NUMBER	REV.
D	MU	FP11-AU-1	B

DIST.

3

FLOATING POINT

FP11-AU FLOATING POINT OPTION UPGRADE KIT
POWER SUPPLY COMPONENTS INSTALLATION PROCEDURE

THE FP11-AU FLOATING POINT OPTION UPGRADE KIT PROVIDES AN H7441 REGULATOR AND 541086Y-YA POWER DISTRIBUTION BOARD IN ORDER TO INCREASE THE AMOUNT OF CURRENT AT +5VDC AVAILABLE FROM THE 10.5" BOX. THE FOLLOWING IS AN INSTALLATION PROCEDURE FOR THESE COMPONENTS.

TOOLS REQUIRED

LARGE PHILLIPS SCREWDRIVER
LARGE STANDARD SCREWDRIVER
MEDIUM PHILLIPS SCREWDRIVER
90° OFFSET PHILLIPS SCREWDRIVER

DEFINITIONS

BOX	BA11-K BOX
CHASSIS	MODULE ENCLOSURE PORTION OF A BA11-K BOX
P/S	H7861 POWER SUPPLY ASSEMBLY PORTION OF A BA11-K BOX
TOP OF BOX	MODULE HANDLES SIDE OF A BA11-K BOX
BOTTOM OF BOX	BACKPLANE PINS SIDE OF A BA11-K BOX
SIDE OF BOX	WHERE CHASSIS SLIDES MOUNT TO A BA11-K BOX
BACK OF P/S	SURFACE OF P/S WHERE THE LINE CORD ENTERS
FRONT OF P/S	SURFACE OF P/S WHERE THE OUTPUT MATE-N-LOKS ARE LOCATED

WARNING: TURN OFF COMPUTER SYSTEM AND DISCONNECT IT FROM POWER LINE BEFORE ATTEMPTING TO WORK ON THE SYSTEM.

1. EXTEND THE BOX OUT OF THE CABINET TO THE LIMITS OF THE CHASSIS SLIDES
2. REMOVE THE CHASSIS TOP COVER TO GAIN ACCESS TO THE P/S TOP COVER.
3. LOOSEN THE CLAMP HOLDING THE CABLES THAT RUN ACROSS THE P/S AND THEN REMOVE THE P/S TOP COVER.
4. ROTATE THE BOX 90° SO THAT THE BOTTOM OF THE BOX NOW FACES AWAY FROM THE CABINET.
5. REMOVE THE CHASSIS BOTTOM COVER. THIS WILL REVEAL THE POWER DISTRIBUTION BOARD LOCATED OVER THE FAN AND BETWEEN THE P/S AND BACKPLANES.

WARNING: DO NOT REMOVE THE TWO HINGE SCREWS (ONE ON EACH SIDE OF THE BOX LOCATED NEAR TOP OF THE BOX AT JUNCTION OF THE P/S AND CHASSIS).

6. REMOVE FOUR FLATHEAD SCREWS (NO WASHERS) LOCATED (TWO ON EACH SIDE OF THE BOX) APPROXIMATELY FOUR INCHES FROM THE BOTTOM EDGE OF THE BOX AT THE JUNCTION OF THE P/S AND CHASSIS. THIS WILL ALLOW THE P/S TO SWING AWAY FROM THE CHASSIS.
7. LOCATE THE H744 +5VDC REGULATOR THAT POWERS THE CPU BACKPLANE. THIS REGULATOR (SHOWN AS REGULATOR #2 ON THE E-UA-11/34-0-0 DRAWING) IS THE SECOND ONE FROM THE RIGHT WHEN FACING THE UPTURNED BOX FROM THW WIRE-WRAP SIDE OF THE BACKPLANE.
8. REMOVE THE TWO MOUNTING SCREWS (AND WASHERS) LOCATED JUST TO THE LEFT OF MATE-N-LOK CONNECTOR FOR THAT H744. THERE WILL BE A GREEN SAFETY GROUND WIRE UNDER ONE OF THEM. THE 90° OFFSET PHILLIPS SCREWDRIVER WILL BE NEEDED FOR THIS OPERATION.
9. REMOVE THE MATE-N-LOK FOR THE H744 AND THE ONE REMAINING HOLDING SCREW (AND WASHER) LOCATED ON THE BACK OF THE P/S TO THE LEFT OF THE H744 DECAL.
10. REMOVE THE H744 BY SLIDING IT OUT THROUGH THE TOP OF THE P/S (YOU MAY HAVE TO ROTATE THE BOX FOR THIS OPERATION).
11. REPLACE THE H744 WITH THE H7441 INCLUDED IN THE FP11-AU.
12. RETURN THE BOX TO THE POSITION OF STEP #3 IF NECESSARY.
13. REPLACE THE MOUNTING SCREWS, WASHERS, AND GREEN SAFETY GROUND WIRE THAT ARE COMMON TO THE H7441 REGULATOR, BUT DO NOT RECONNECT THE MATE-N-LOK.
14. REMOVE THE THREE REMAINING MATE-N-LOKS CONNECTING THE REGULATORS TO THE POWER DISTRIBUTION BOARD FLYING LEADS.
15. LOCATE THE BLACK GROUND WIRE SOLDERED TO THE POWER DISTRIBUTION BOARD NEAR J16. REMOVE THIS CONNECTION FROM THE P/S (NO WASHER) AND THE CHASSIS (WASHER).
16. REMOVE THE +5V AND GND FASTONS FROM THE POWER DISTRIBUTION BOARD THAT ARE LOCATED NEAR J14.
17. REMOVE THE SIX PIN MATE-N-LOK FROM THE POWER DISTRIBUTION BOARD AT J8.
18. LOCATE AND REMOVE THE FOUR FLATHEAD MOUNTING SCREWS (NO WASHERS) HOLDING THE POWER DISTRIBUTION BOARD TO THE CHASSIS. THEY ARE LOCATED (TWO ON EACH SIDE OF BOX) 2" UP FROM THE BOTTOM OF THE BOX NEAR THE JUNCTION OF THE P/S AND CHASSIS. THIS WILL ALLOW THE POWER DISTRIBUTION BOARD TO BE MOVED TO FACILITATE REMOVAL OF ALL BACKPLANE MATE-N-LOK CONNECTORS.
19. REMOVE ALL BACKPLANE MATE-N-LOK CONNECTORS.
20. REMOVE THE TWO REMAINING MATE-N-LOKS CONNECTING THE POWER DISTRIBUTION BOARD TO THE P/S.
21. REMOVE THE POWER DISTRIBUTION BOARD FROM THE CHASSIS.
22. REVERSE PROCEDURE (STEPS #21 TO #14, #6 TO #1) TO INSTALL THE NEW POWER DISTRIBUTION BOARD. CAUTION: SEE NOTE #1

DESCRIPTION	DWG./PART NO.	ITEM NO.
UNLESS OTHERWISE SPECIFIED DIMENSIONS ARE IN INCHES		

ANGLES ±0° 30'	CLASS OF ACCURACY (CHECK ONE)	NOMINAL DIMENSION RANGE INCHES: OVER 0 TO 0.2	OVER 0.2 TO 1.2	OVER 1.2 TO 4.0	OVER 4.0 TO 12.0	OVER 12.0 TO 40.0	OVER 40.0 TO 80.0
SURFACE QUALITY IN MICROINCHES	MEDIUM	±.004	±.008	±.012	±.016	±.024	±.04
	PREFERRED	±.012	±.016	±.025	±.04	±.063	±0.1

QUANTITY & VARIATION

THIRD ANGLE PROJECTION

REMOVE BURRS AND BREAK SHARP CORNERS

DO NOT SCALE DWG

MATERIAL

FINISH

DRN.		16 DEC 76
CHK'D		16 DEC 76
ENG.		16 DEC 76
PROJ. ENG.		20 DEC 76
PROD.		21 DEC 76

NEXT HIGHER ASSY. B DD-FP11-AU

SCALE NONE

SHEET 2 OF 2

FIRST USED ON

digital

TITLE MODULE UTILIZATION FP11-AU

SIZE	CODE	NUMBER	REV.
D	MU	FP11-AU-1	B

DIST.

REVISIONS		
CHK	CHANGE NO.	REV.

DEC FORM NO. 5009 1006-C

FIELD MAINTENANCE PRINT SET

TABLE OF CONTENTS

B-TC-FP11-A-4	FLOATING POINT OPTION (TC)
B-DD-FP11-A	FLOATING POINT OPTION
D-UA-FP11-A-Ø	FLOATING POINT OPTION
A-PL-FP11-A-Ø	FLOATING POINT OPTION (PL)
D-BD-FP11-A-1	BLOCK DIAGRAM
D-UA-M8267-Ø-Ø	FLOATING POINT OPTION
B-PL-M8267-Ø-Ø	FLOATING POINT OPTION (PL)
D-CS-M8267-Ø-1	FLOATING POINT OPTION (CS)
D-UA-H8821-Ø-Ø	BOARD INTERCONNECT 4Ø Pin
B-PL-H8821-Ø-Ø	BOARD INTERCONNECT 4Ø Pin (PL)
D-CS-H8821-Ø-1	BOARD INTERCONNECT 4Ø Pin (CS)
D-UA-5412416-Ø-Ø	BOARD INTERCONNECT 2Ø Pin
B-PL-5412416-Ø-Ø	BOARD INTERCONNECT 2Ø Pin (PL)
D-CS-5412416-Ø-1	BOARD INTERCONNECT 2Ø Pin (CS)
D-UA-W9Ø42-Ø-Ø	EXTENDER BOARD ASSY.
B-PL-W9Ø42-Ø-Ø	EXTENDER BOARD ASSY. (PL)
D-CS-W9Ø42-Ø-1	EXTENDER BOARD ASSY. (CS)
A-PL-FP11-A-3	SHIPPING LIST
D-FD-FP11-A-2	FLOW DIAGRAM

UNIT VARIATIONS COVERED BY THIS PRINT SET
FP11-A

FP11-A

Field Maintenance Print Set

Digital Equipment Corporation

PRINT SET ORDER NO.
MPØØ189

REVISIONS		
REV.	A	
CHG. NO.	FP11-A-1	
DATE	7-77	

USED ON OPTION/MODEL	
1134A	

SHEET I OF 1

DRN. D. HEALY	DATE OCT 76	TITLE: FLOATING POINT OPTION	digital
CHK'D D. HEALY	DATE OCT 76		
PROJ. ENG.	DATE 12-0-76		
FIELD SERV.	DATE 12-22-76		

SIZE	CODE	NUMBER	REV.
B	TC	FP11-A-4	A

DIST.

EN-01124-18-N678(321)

DRB 124

digital EQUIPMENT CORPORATION MAYNARD MASSACHUSETTS

DRAWING DIRECTORY

CUSTOMER PRINT SET INDEX

SEQUENCE

SEQUENCE

THIS IS PRINT SET

UNIT VARIATIONS		PRINT SET
VAR	TITLE	
FP11-A	FLOATING POINT OPTION	

REVISIONS		
DATE	CHG. NO.	REV
7-77	FP11-A-1	A
9-77	FP11-A-2	B

USED ON OPTION/MODEL	
1134A	

SHEET 1 OF 2

DRN. D. HEALY	DATE OCT 76	TITLE FLOATING POINT OPTION
CHK'D. D. HEALY	DATE OCT 76	
PROJ ENG. J.W. Mitchell	DATE 12-1-76	
PROD.	DATE	SIZE B / CODE DD / NUMBER FP11-A / REV B
~~FIELD SERV.~~	~~DATE~~	DIST

EN-01062-1A-16-R972-(325)

DRB 106

68

FIND NO.	DRAWING NO.	DESCRIPTION	TYPE	FIND NO.	DRAWING NO.	DESCRIPTION	TYPE
1	B-TC-FP11-A-4	FLOATING POINT OPTION (FIELD MAINT. PR. SET)	-				
	MPØØ189	FLOATING POINT OPTION (PR SET ORDER NO.)	-				
	D-UA-FP11-A-Ø	FLOATING POINT OPTION	M/E				
	A-PL-FP11-A-Ø	FLOATING POINT OPTION (PL)	M/E				
	D-BD-FP11-A-1	BLOCK DIAGRAM	E				
	D-FD-FP11-A-2	FLOW DIAGRAM					
	A-PL-FP11-A-3	SHIPPING LIST	M/E				
2	B-DD-M8267-Ø	FLOATING POINT PROCESSOR	M/E				
	B-PL-M8267-0-8	ROM LISTING					
3	B-DD-H8221-Ø	BOARD INTERCONNECT 4Ø Pin	M/E				
4	B-DD-5412416-0	BOARD INTERCONNECT 2Ø Pin	M/E				
5	B-DD-W9Ø42-Ø	EXTENDER BOARD ASSY.	M/E				

TYPE: E ELECTRICAL
M MECHANICAL
E/M ELECTRO/MECHANICAL

digital

TITLE FLOATING POINT OPTION

SHEET	SIZE	CODE	NUMBER	REV
2 OF 2	B	DD	FP11-A	B

DRB 108A

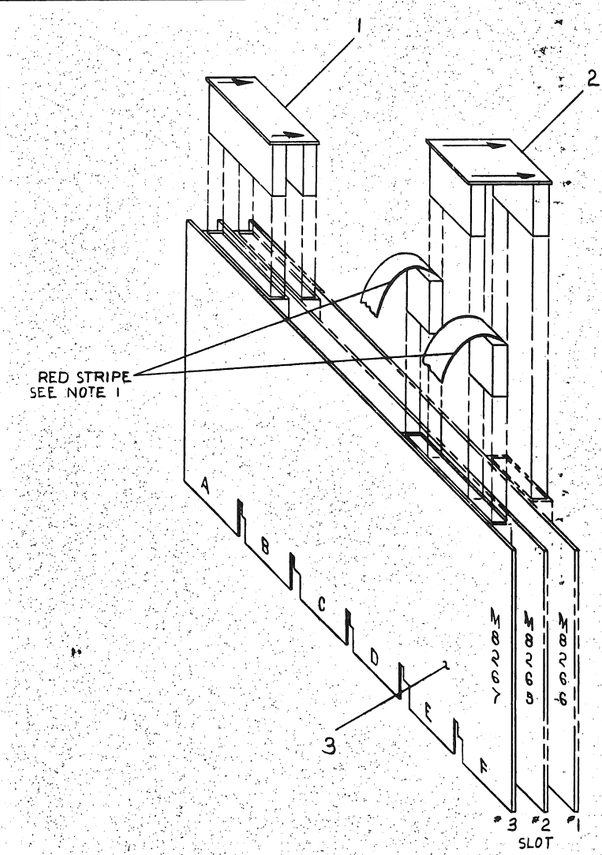

CONFIGURATION "A"

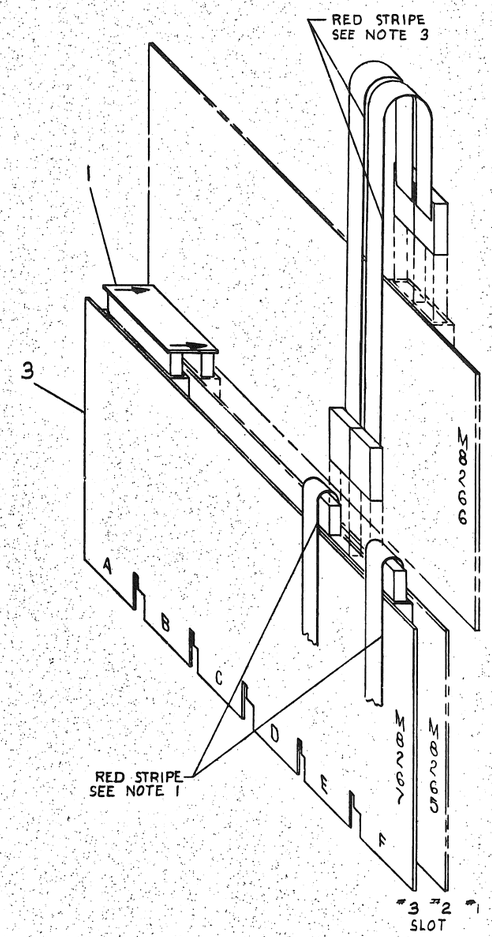

CONFIGURATION "B"

NOTES:

1. THESE CABLES #7011411-ID ARE PART OF KY11-LB OPTION AND MAY NOT BE PRESENT IN SOME CONFIGURATIONS.
2. THE W9042 EXTENDER BD. ASSY. IS STORED IN THE BACKPLANE AND IS USED FOR SOME MAINTENANCE OPERATIONS.
3. THESE CABLES ARE INSTALLED DURING MAINTENANCE ONLY, AND ARE CLIPPED TO THE W9042 FOR STORAGE. THESE CABLES #7011411-ID ARE PART OF W9042.
4. MODULES M8265 & M8266 ARE PART OF KD11-EA & SHOWN FOR REF ONLY.

ITEM NO.	DESCRIPTION	DWG./PART NO.
4	EXTENDER BD. ASSY.	D-UA-W9042-0-0
3	FLOATING POINT (FP11-A)	D-UA-M3267-0-0
2	BOARD, INTERCONN 20 PIN	D-UA-5412416-0-0
1	BOARD, INTERCONN 40 PIN	D-UA-H8821-0-0

UNLESS OTHERWISE SPECIFIED DIMENSIONS ARE IN INCHES

ANGLES ±0° 30'	CLASS OF ACCURACY (CHECK ONE)	NOMINAL DIMENSION RANGE INCHES: OVER 0 TO 0.2	OVER 0.2 TO 1.2	OVER 1.2 TO 4.0	OVER 4.0 TO 12.0	OVER 12.0 TO 40.0	OVER 40.0 TO 80.0
SURFACE QUALITY IN MICROINCHES	MEDIUM ✓	±.005	±.008	±.012	±.016	±.024	±.04
	PRESSFITTED	±.012	±.016	±.020	±.04	±.063	±0.1

QUANTITY & VARIATION

THIRD ANGLE PROJECTION

REMOVE BURRS AND BREAK SHARP CORNERS

DO NOT SCALE DWG

MATERIAL: SEE PARTS LIST

FINISH

DRN. B.O.	11 OCT 76	
CHK'D D. Olson	29 OCT 76	
ENG.	16 DEC 76	
PROJ. ENG. MITCHELL	11 OCT 76	
PROD.	11 OCT 76	

NEXT HIGHER ASSY.: B-DD-FP11-A

SCALE: NONE

SHEET 1 OF 2

FIRST USED ON: 1139

digital

TITLE: FLOATING POINT OPTION

SIZE	CODE	NUMBER	REV.
D	UA	FP11-A-0	

DIST.

REVISIONS: REV. / CHANGE NO. / CHK.

70

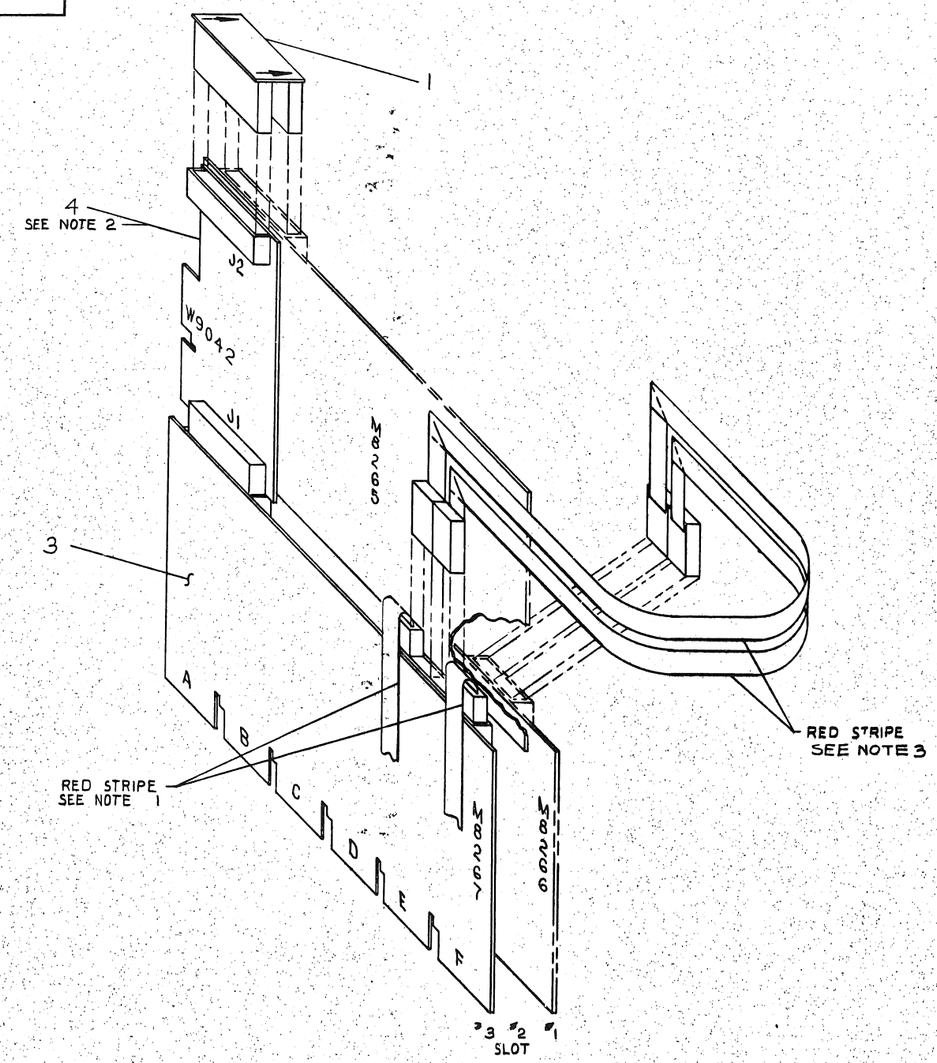

CONFIGURATION "C"

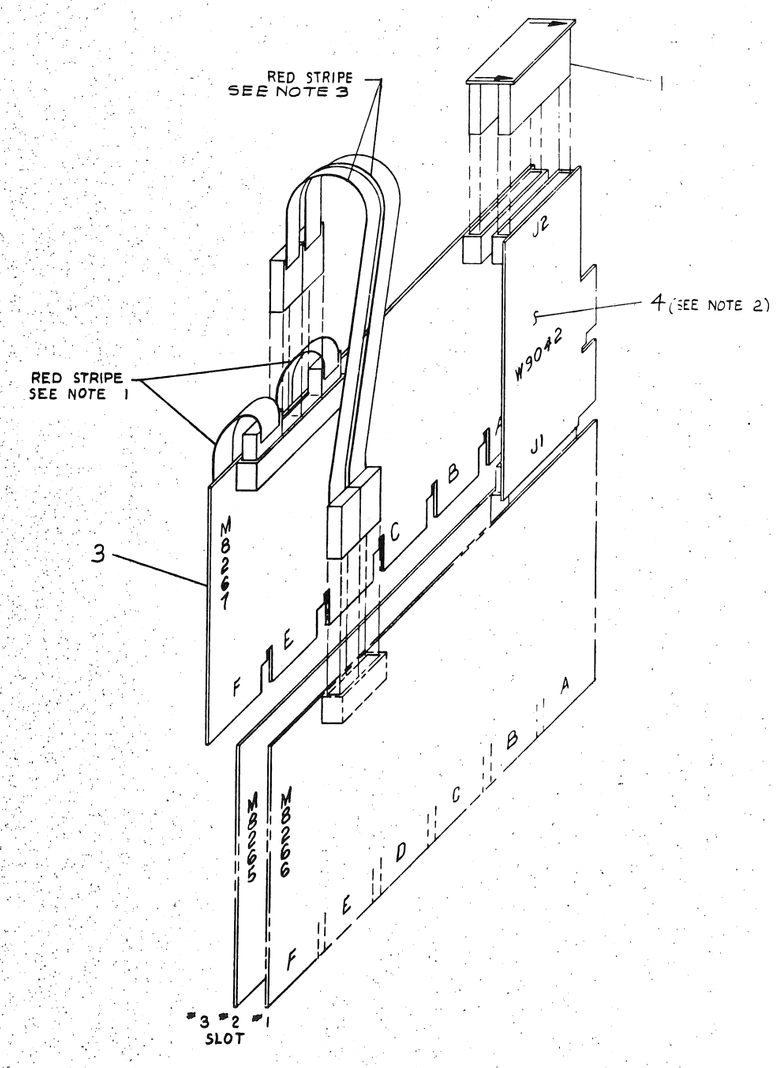

CONFIGURATION "D"

REVISIONS		
CHK	CHANGE NO.	REV.

TITLE	SIZE	CODE	NUMBER	REV.
FLOATING POINT OPTION	D	UA	FP11-A-Ø	
SCALE NONE	SHEET 2 OF 2		DIST.	

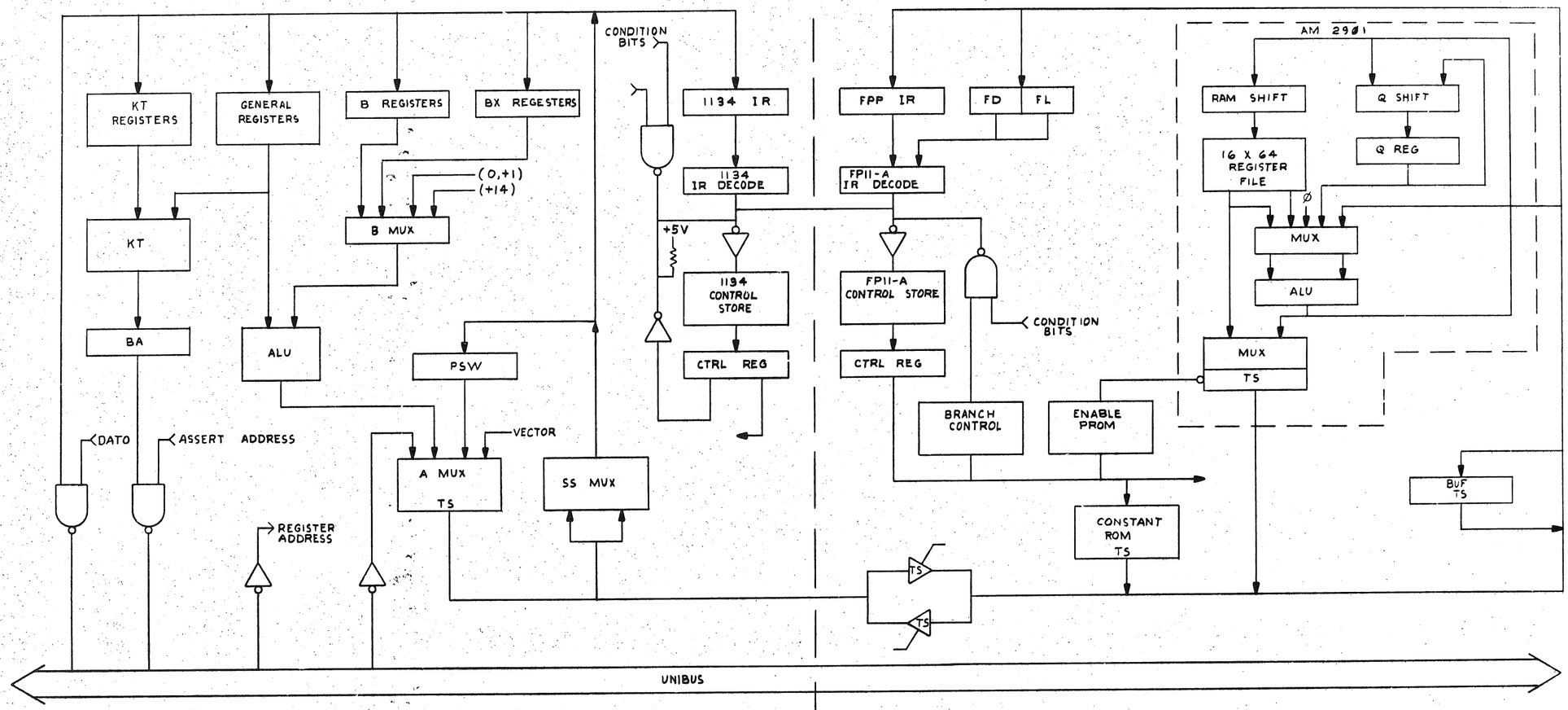

DRN.		
CHK'D		
ENG.		20 Jan 76
PROJ. ENG.		
PROD.		
NEXT HIGHER ASSY.	B-DD-FP11-A	
SCALE	—	
SHEET	1 OF 1	

FIRST USED ON: 1134 A digital

TITLE: 1134 FLOATING POINT PROCESSOR FP11-A

SIZE	CODE	NUMBER	REV.
D	BD	FP11-A-1	

DIST.

REVISIONS: REV. | CHANGE NO. | CHK.

DEC FORM NO. 600 1120-0

72

COMPONENT SIDE VIEW

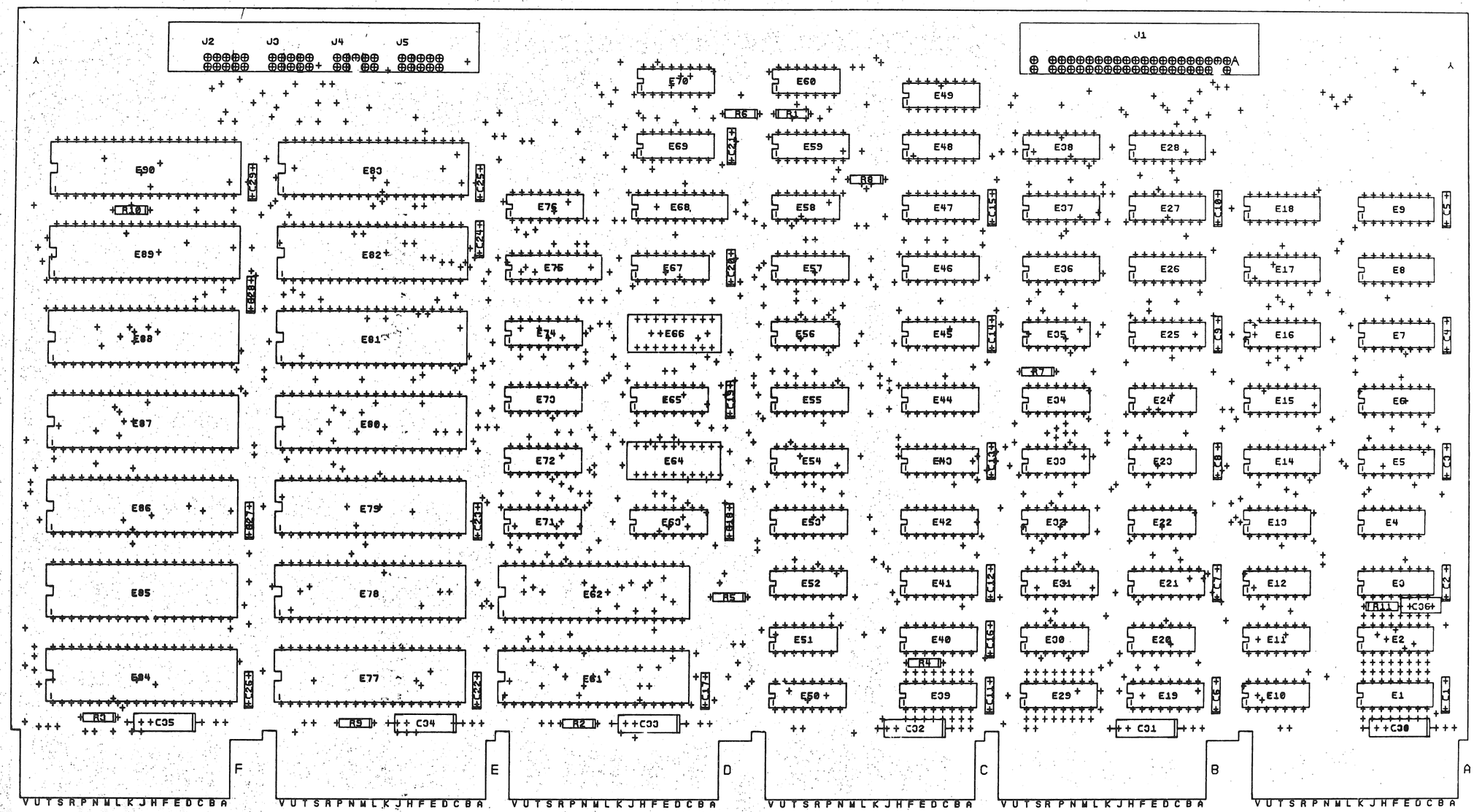

NOTES:

CHK	CHANGE NO	REV

ETCH REV.
P.C. DESIGN DATA BASE REV.

SIGNATURES	DATE
DRN. Floyd Conway	3-4-77
CHK'D. Joseph E. Smart	4-26-77
ENG.	7-19-77
PROJ.ENG.	7-19-77
PROD.	10-Jul-77

digital

TITLE 11/34 FLOATING PT OPTION

SCALE 2/1
SHT. 1 OF 3
NEXT HIGHER ASSY. B-DD-M8267-0

SIZE	CODE	NUMBER	REV
D	UA	M8267-0-C	C

M.S# 116365

L1

LAYER 1

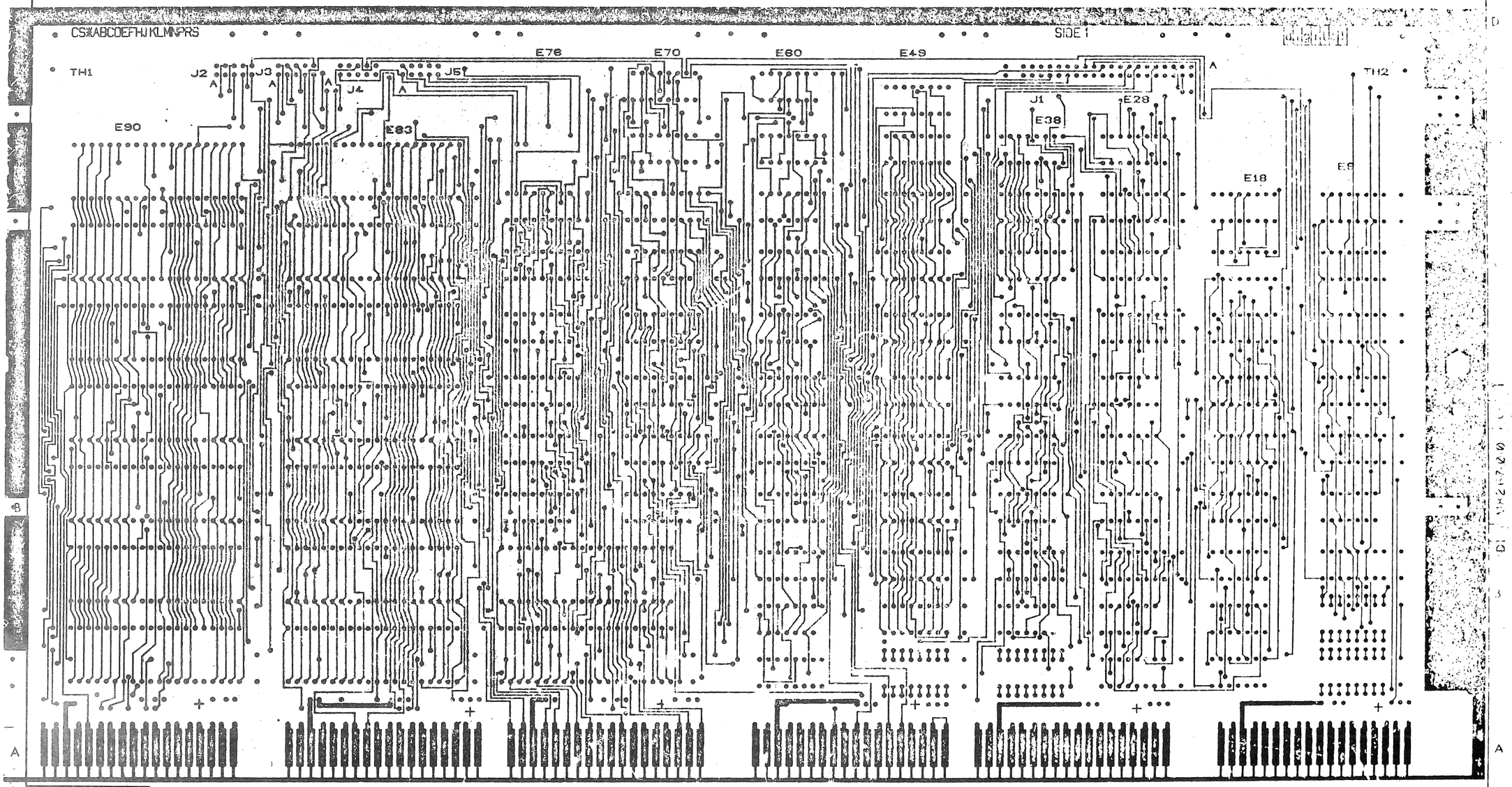

REVISIONS		
CHK	CHANGE NO	REV

TITLE 11/34 FLOATING PT OPTION

SIZE D | CODE 1A | NUMBER M8267-00 | REV. C

SCALE 2/1 | SHEET 2 OF 3 | DIST

74

LAYER 4

L4

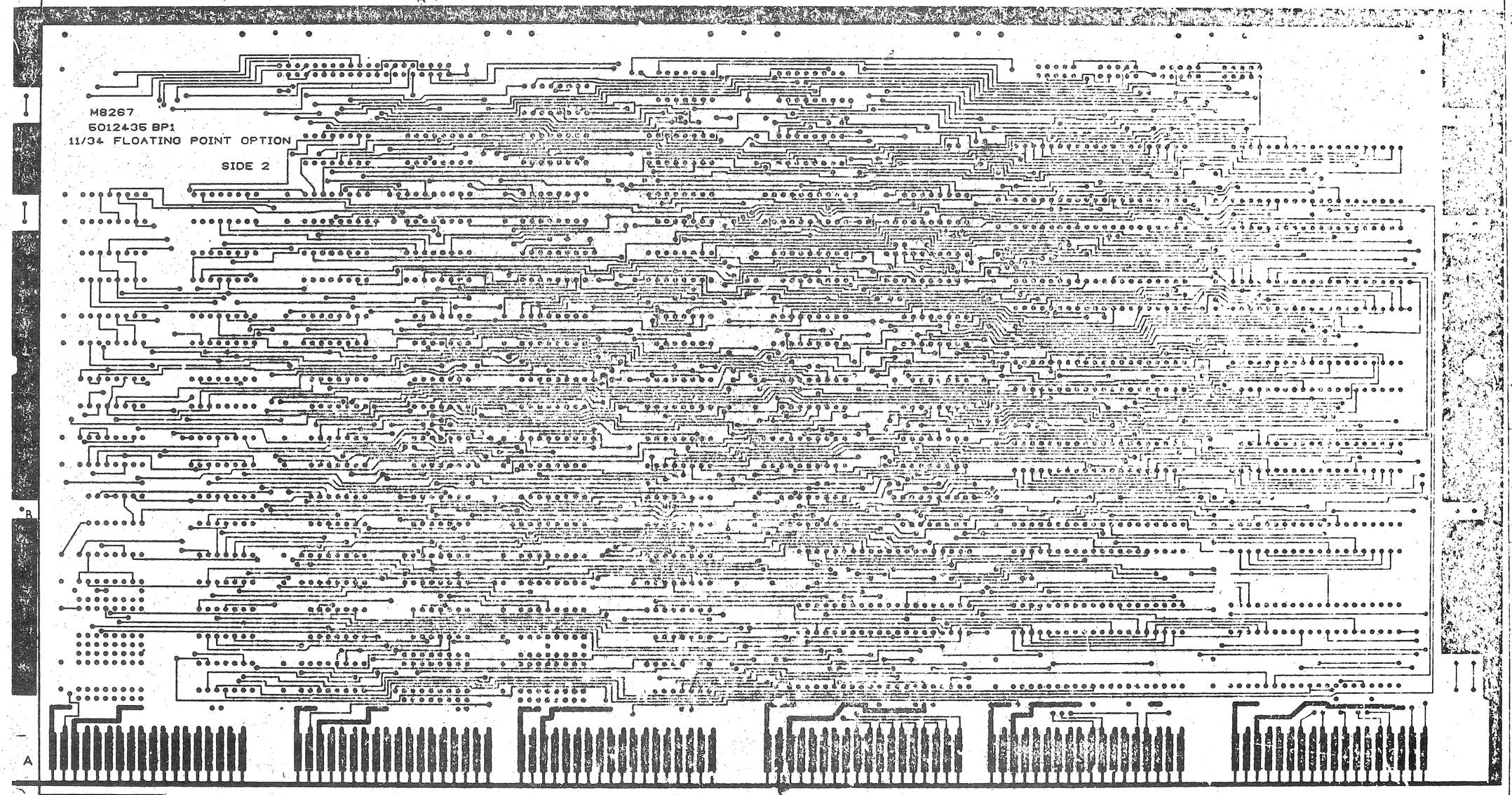

REVISIONS		
CHK	CHANGE NO.	REV.

TITLE 11/34 FLOATING PT. OPTION	SIZE D	CODE UA	NUMBER M8267-0-0	REV. C
SCALE 2/1	SHEET 3 OF 3	DIST		

75

DIGITAL EQUIPMENT CORPORATION
PARTS LIST

MADE BY D. J. SIREEN	CHECKED F. SEIDMAN	SECTION	
DATE 12 JULY 76	DATE 18 AUG 76		
ENG M. Sullivan	PROD R. B. KING	ISSUED SECTION	
DATE 7/18/77	DATE 15 JUL 77		

NOTES:

ITEM NO.	DRAWING NO.	PART NO.	DESCRIPTION	QUANTITY / VARIATION M8267-Ø-Ø	REF DESIGNATION
1	D-MD-5012435-0-0	5012435	ETCHED BOARD	1	
2		1005306	CAPACITOR, 6.8 uf, 35V, 10% TANT	6	C30 thru C35
3		1012784	CAPACITOR, .047 uf 50V, CER	29	C1 thru C29
4		1213506-01	RT. ANGLE HEADER 40 POS.	1	J1
5		1213506-02	RT. ANGLE HEADER 52 POS.	1	J2 thru J5 (ONE CONNECTOR)
6					
7		1300271	RESISTOR, 220, 1/4W, 5%	1	R1
8		1300295	RESISTOR, 330, 1/4W, 5%	2	R7,R8
9		1300316	RESISTOR, 470, 1/4W, 5%	5	R2,R3,R9,R10,R4
10		1300229	RESISTOR, 100, 1/4W, 5%	1	R11
11		1301401	RESISTOR, 750, 1/4W, 5%	1	R6
12		1910533	I.C. DEC 74SØ3	4	E11,E20,E23 E32
13		1910535	I.C. DEC 74SØ5	1	E33
14		1910532	I.C. DEC 74SØØ	2	E22,E60
15		1910534	I.C. DEC 74SØ4	2	E35,E34
16		1910536	I.C. DEC 74S1Ø	1	E30
17		1910539	I.C. DEC 74S2Ø	1	E10
18		1910544	I.C. DEC 74S74	1	E13
19		1910547	I.C. DEC 74S153	2	E59,E69
20		1910548	I.C. DEC 74S157	1	E70
21		1910550	I.C. DEC 74S174	9	E27,E31,E28,E49,E52,E53,E57,E65 E67

E.C.O. NO.

TITLE	ASSY NO.	SIZE	CODE	NUMBER	REV.
11/34 FLOATING POINT OPTION	D-UA-M8267-Ø-Ø	B	PL	M8267-Ø-Ø	C
	SHEET 1 OF 3	INSERTION PARTS LIST DATA BASE REV			

DRB 125

76

DIGITAL EQUIPMENT CORPORATION
PARTS LIST

MADE BY D. J. SIREEN DATE 12 JULY 76	CHECKED F. SEIDMAN DATE 18 AUG 76	SECTION
ENG M Sullivan DATE 7/18/77	PROD R. B. KING DATE 15 Jul 77	ISSUED SECTION

NOTES:

ITEM NO.	DRAWING NO.	PART NO.	DESCRIPTION	QUANTITY / VARIATION M8267-Ø-Ø	REF DESIGNATION
22		1910837	I.C. DEC 8Ø93	3	E51 E56,E58
23		1910957	I.C. DEC 74S175	2	E18,E26
24		1911527	I.C. DEC 8Ø97	6	E5 thru E9,E16
25		1912097	I.C. DEC 74S182	6	E50,E63,E71 thru E74
26		1912388	I.C. DEC 74SØ2	1	E24
27		1912746	I.C. DEC 74S37	1	E12
28		1911330	I.C. DEC 74173	4	E3,E14,E15,E25
29		1913245	I.C. DEC AM 29Ø1	16	E61 E62,E77 thru E90
30		1911637	I.C. DEC 74132	1	E4
31		1212385	40 PIN SOCKET	16	E61,E62 E77 thru E90
32		1000015	CAPACITOR, 82 pf, 5%	1	C36
33		7417214	HANDLE, MODIFIED	1	
34			I.C. SPARES	4	E1,E2,E29,E39
35		9000024-01	EYELET	9	
36		23157A1	I.C. DEC PROM 32 x 8 T.S.	1	E17
37		23153A1	I.C. DEC PROM 32 x 8 T.S.	1	E19
38		23154A1	I.C. DEC PROM 32 x 8 T.S.	1	E21
39		23155A1	I.C. DEC PROM 32 x 8 T.S.	1	E54
40		23158A1	I.C. DEC PROM 32 x 8 T.S.	1	E55
41		23156A1	I.C. DEC PROM 32 x 8 T.S.	1	E76
42		23Ø14F1	I.C. DEC PROM 1K x 4 O.C.	1	E64

E.C.O. NO

DRB 125

TITLE	ASSY NO.	SIZE	CODE	NUMBER	REV.
11/34 FLOATING POINT OPTION	D-UA-M8267-Ø-Ø	B	PL	M8267-Ø-Ø	C
	SHEET 2 OF 3	INSERTION PARTS LIST DATA BASE REV			

DIGITAL EQUIPMENT CORPORATION
PARTS LIST

MADE BY	D. J. SIREEN	CHECKED	F. SEIDMAN
DATE	12 JULY 76	DATE	18 AUG 76
ENG	M. Sullivan	PROD	R.B. KING
DATE	7/18/77	DATE	15 Jul 77

SECTION

ISSUED SECTION

NOTES:

ITEM NO.	DRAWING NO.	PART NO.	DESCRIPTION	QUANTITY / VARIATION M8267-Ø-Ø												REF DESIGNATION
43		23Ø15F1	I.C. DEC PROM 1K x 4 O.C.	1												E66
44		23435A9	I.C. DEC PROM 512 x 4 T.S.	1												E45
45		23436A9	I.C. DEC PROM 512 x 4 T.S.	1												E44
46		23437A9	I.C. DEC PROM 512 x 4 T.S.	1												E43
47		23438A9	I.C. DEC PROM 512 x 4 T.S.	1												E38
48		23439A9	I.C. DEC PROM 512 x 4 T.S.	1												E42
49		2344ØA9	I.C. DEC PROM 512 x 4 T.S.	1												E41
50		23441A9	I.C. DEC PROM 512 x 4 T.S.	1												E40
51		23442A9	I.C. DEC PROM 512 x 4 T.S.	1												E37
52		23443A9	I.C. DEC PROM 512 x 4 T.S.	1												E36
53		23444A9	I.C. DEC PROM 512 x 4 T.S.	1												E48
54		23445A9	I.C. DEC PROM 512 x 4 T.S.	1												E47
55		23446A9	I.C. DEC PROM 512 x 4 T.S.	1												E46
56		23Ø1ØB1	I.C. DEC PROM 256 x 8 T.S.	1												E75
57		23Ø11B1	I.C. DEC PROM 256 x 8 T.S.	1												E68
58		1300365	RESISTOR, 1K, 1/4W, 5%	1												R5

E.C.O. NO.

TITLE 11/34 FLOATING POINT OPTION

ASSY NO. D-UA-M8267-Ø-Ø

SHEET 3 OF 3

SIZE B | CODE PL | NUMBER M8267-Ø-Ø | REV. C

INSERTION PARTS LIST DATA BASE REV

DRB 125

78

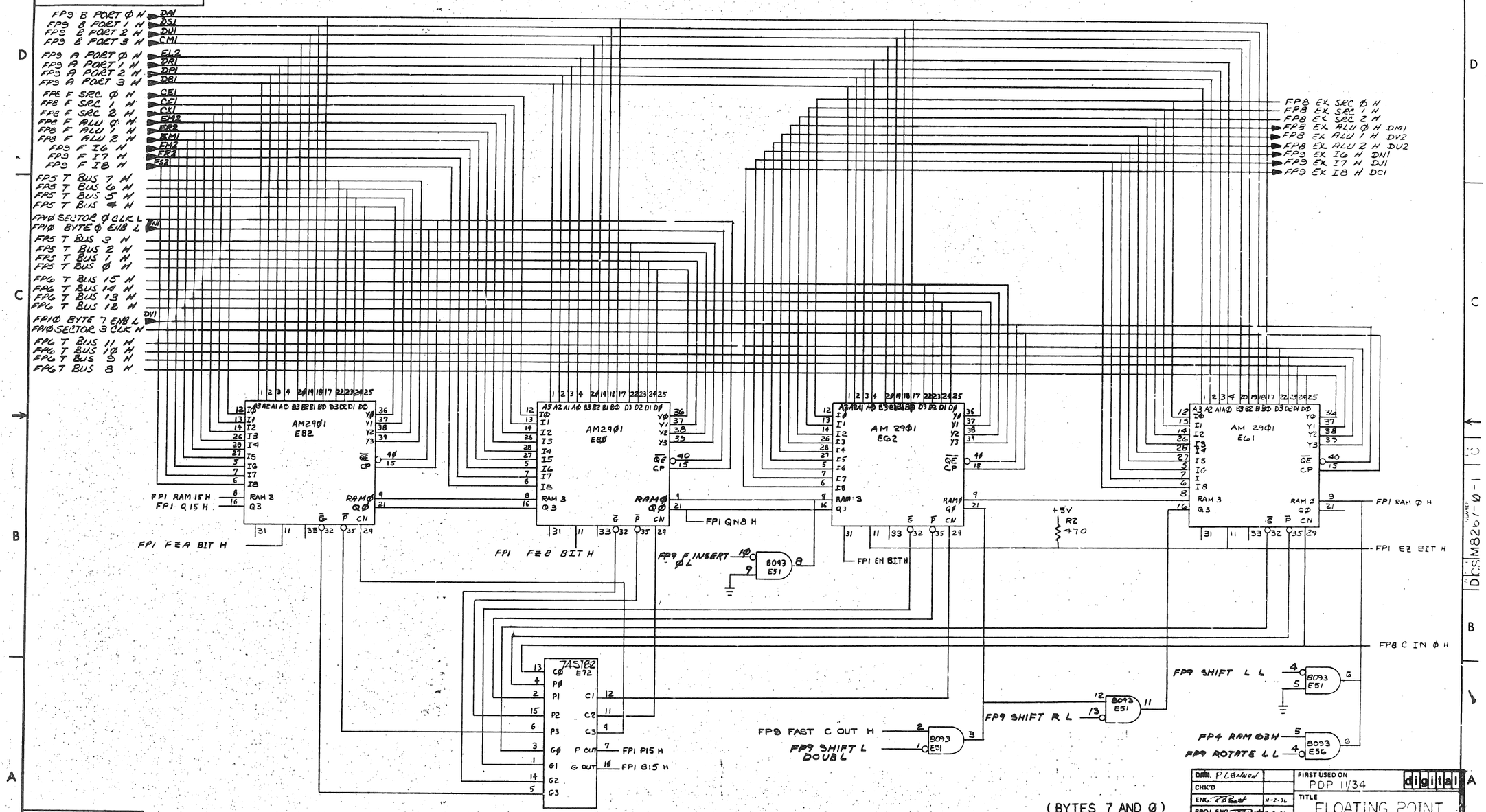

REVISIONS					
CHK	CHANGE NO.	REV.	M8267-00002 B	M8267-00003 C	
M8267-00001	A				
B. Chisson 20 Jan. 77			P. Trager 9MAY77	J. Richard 6 SEP 77	
B. PRATT			B. PRATT	M. SULLIVAN	
Robert Pratt 25-Jan-77			Bob Pratt 5/26/77	M. Sullivan	

DRN. P. Clawson		FIRST USED ON PDP 11/34
CHK'D		digital
ENG. R.B. Pratt	4-2-76	TITLE FLOATING POINT PROCESSOR (FPI)
PROJ. ENG. R.B. Pratt	4-2-76	
PROD. R.B. Pratt	Aug 20 76	
NEXT HIGHER ASSY.		SIZE D CODE CS NUMBER M8267-D-1 REV.
SCALE		
SHEET 1 OF 10		DIST.

79

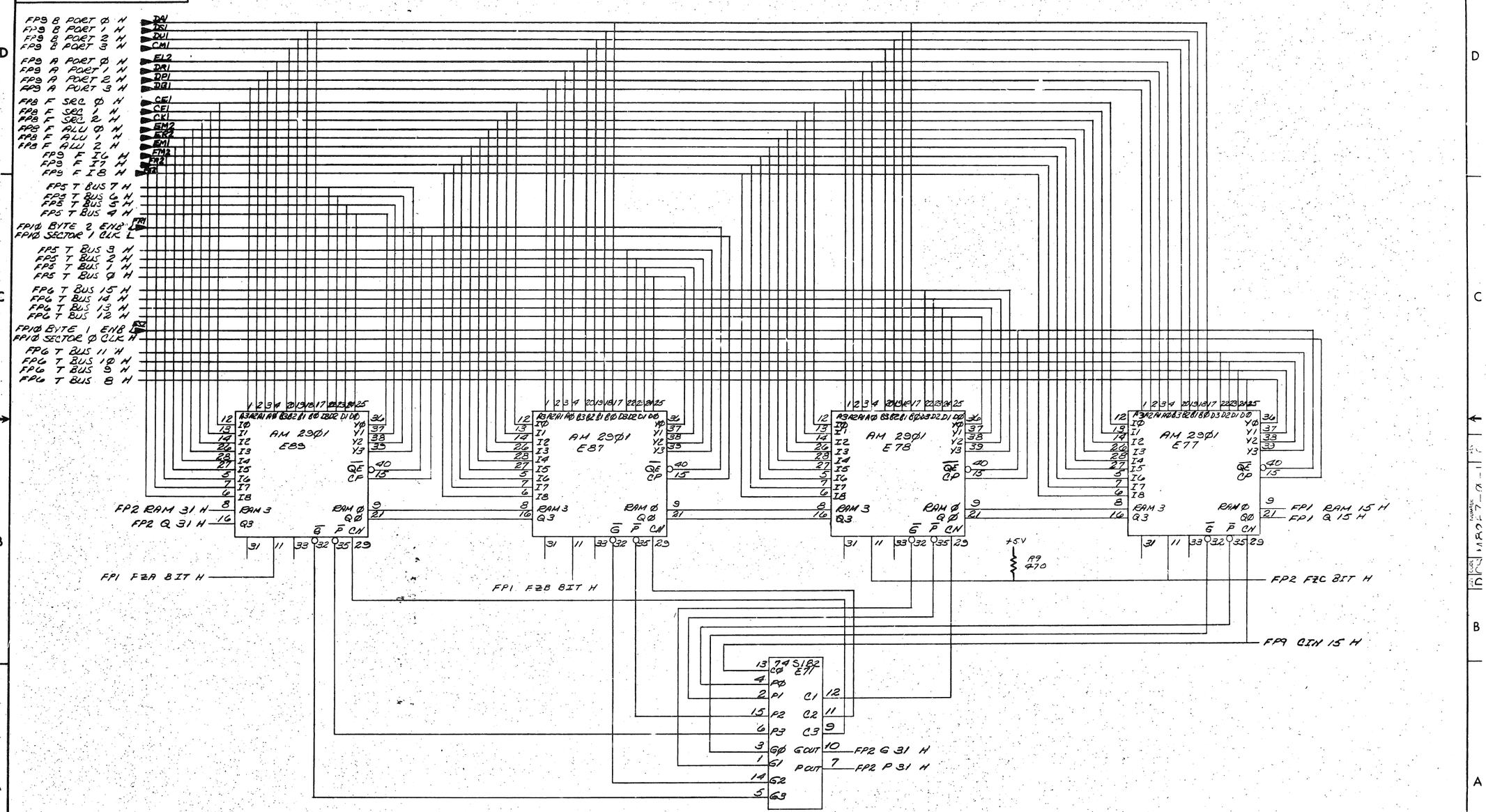

(BYTES 1 AND 2)

REVISIONS		
CHK	CHANGE NO.	REV.

TITLE	SIZE	CODE	NUMBER	REV.
FLOATING POINT PROCESSOR (FP2)	D	CS	M8267-Ø-1	C
SCALE	SHEET 2 OF 1Ø		DIST.	

80

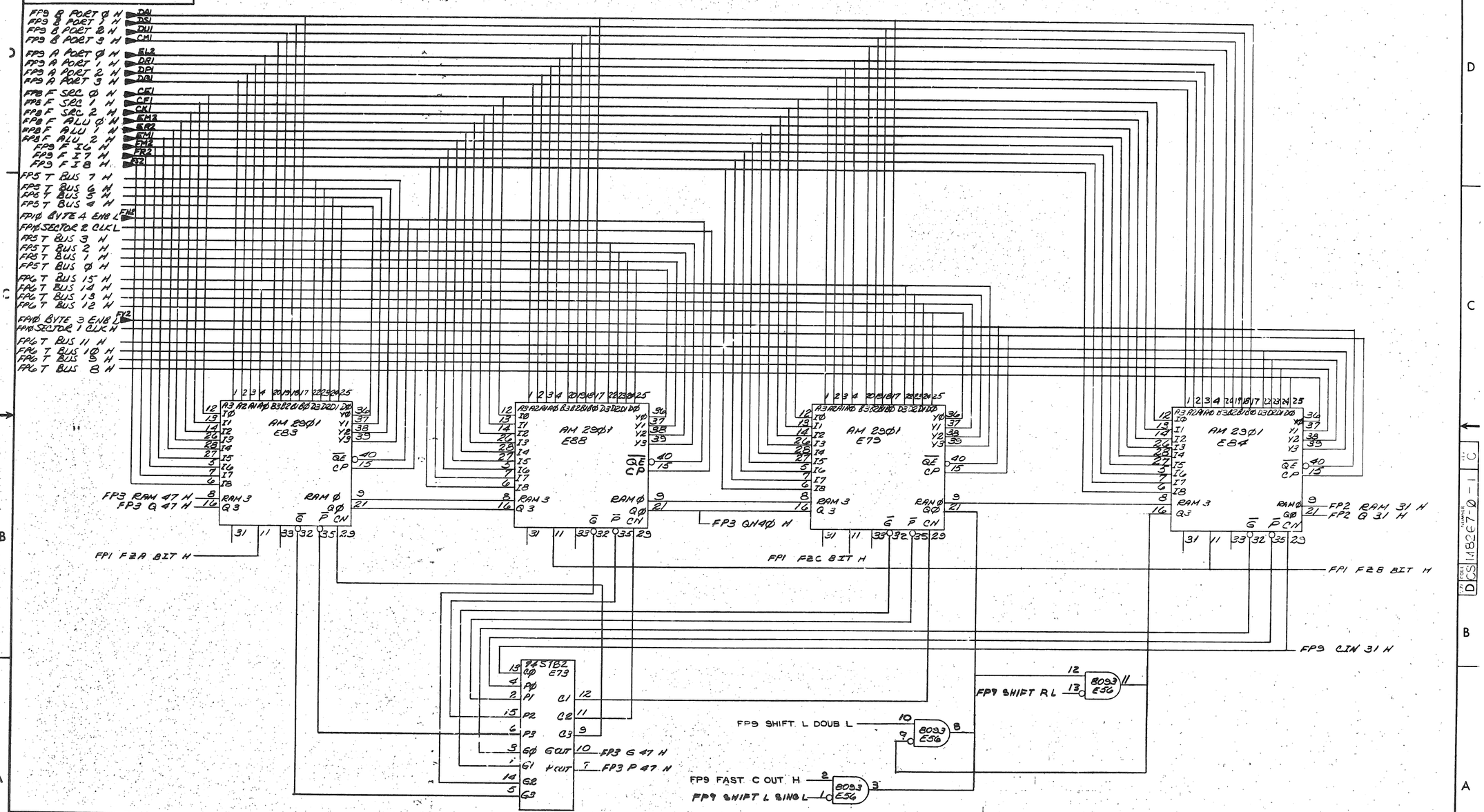

(BYTES 3 AND 4)

REVISIONS		
CHK	CHANGE NO.	REV.

TITLE	SIZE	CODE	NUMBER	REV.
FLOATING POINT PROCESSOR (FP3)	D	CS	M8267-Ø-1	C
SCALE —	SHEET 3 OF 1Ø	DIST.		

81

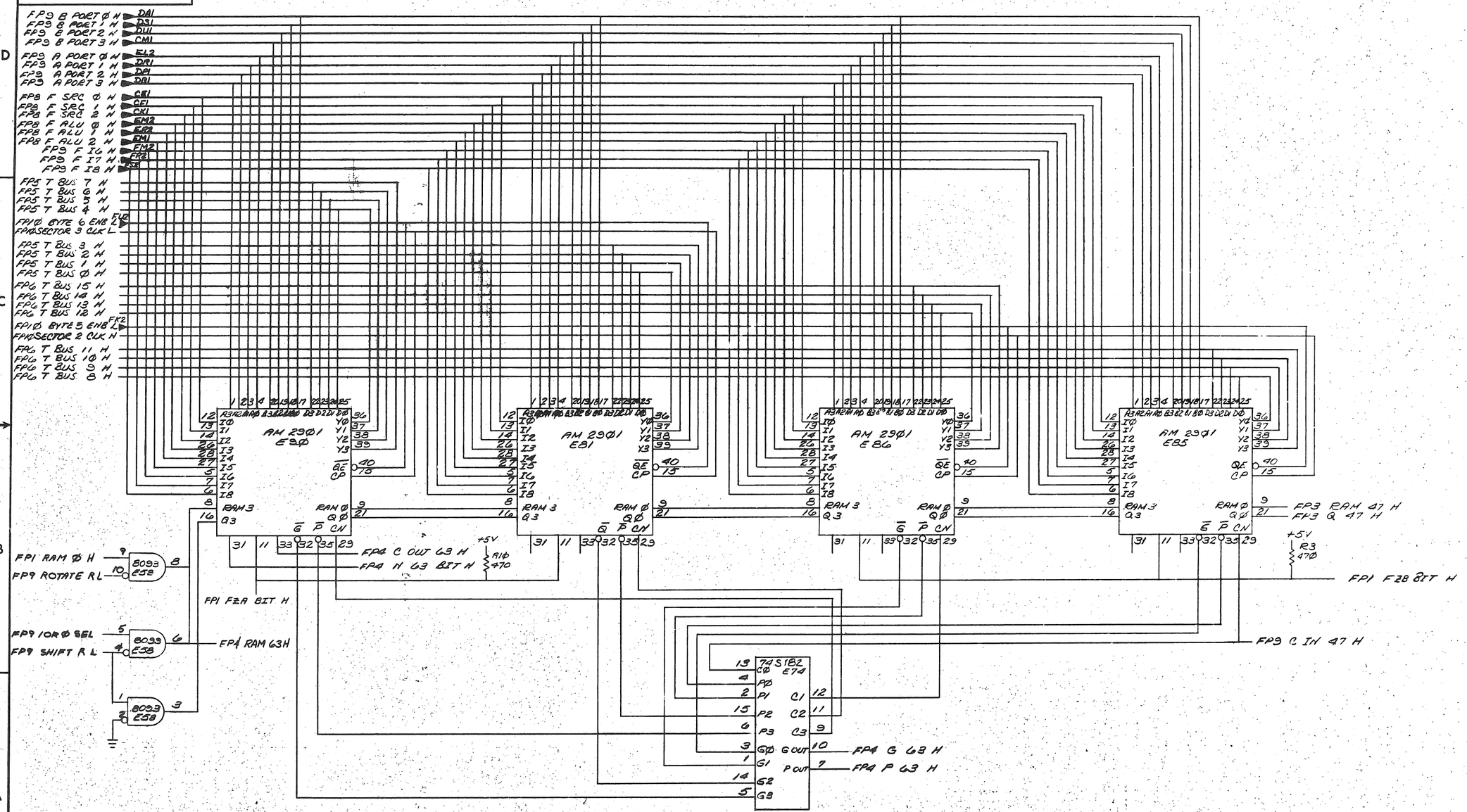

(BYTES 5 AND 6)

REVISIONS		
CHK	CHANGE NO.	REV.

TITLE	SIZE	CODE	NUMBER	REV.
FLOATING POINT PROCESSOR (FP4)	D	CS	M8267-Ø-1	C
SCALE — / —	SHEET 4 OF 1Ø		DIST.	

DEC FORM NO. DDS 120

82

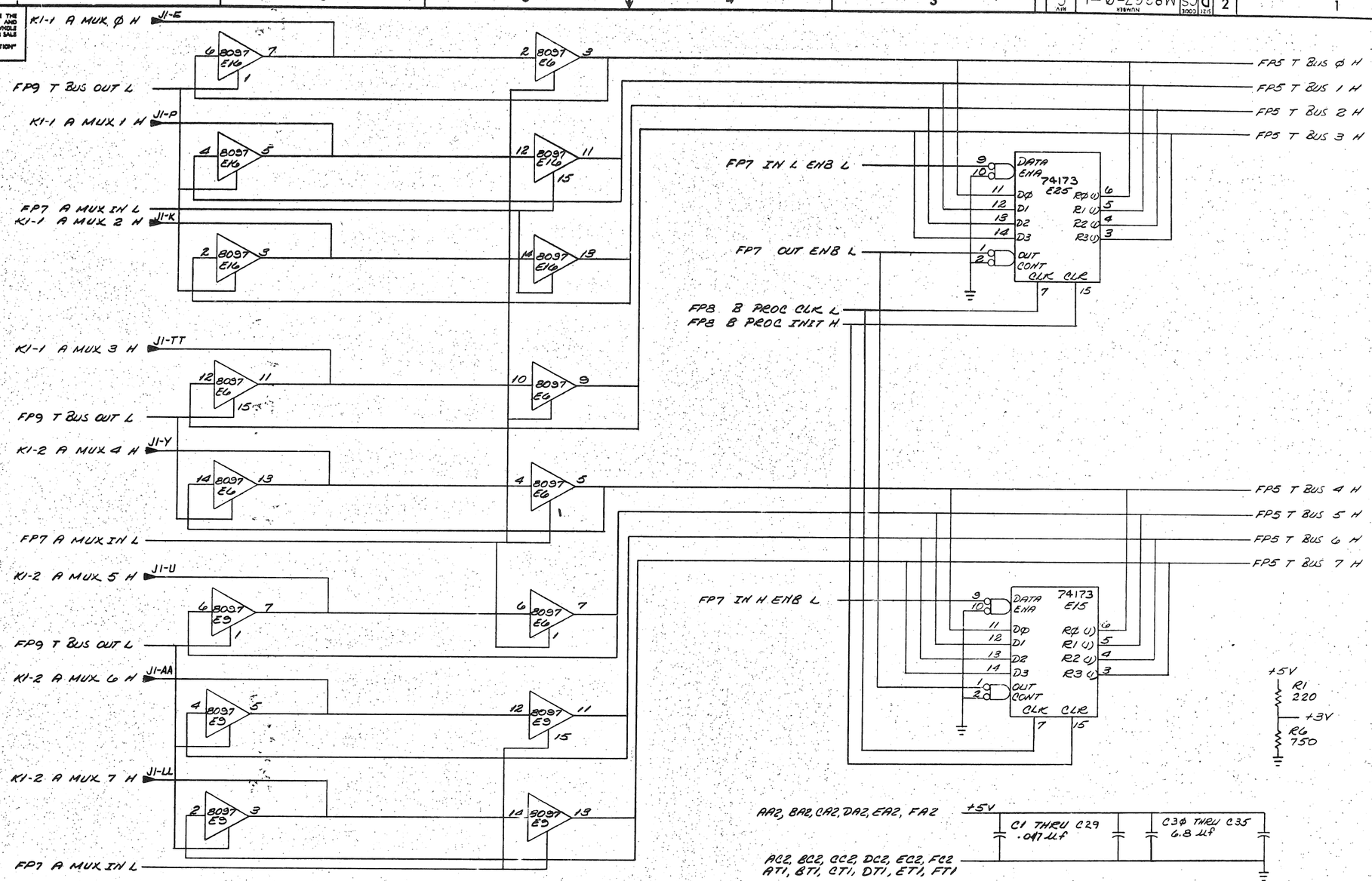

(LOW BYTE BUFFER)

REVISIONS		
CHK	CHANGE NO.	REV.

TITLE	SIZE	CODE	NUMBER	REV.
FLOATING POINT PROCESSOR (FP5)	D	CS	M8267-Ø -1	C
SCALE —	SHEET 5 OF 1Ø		DIST.	

83

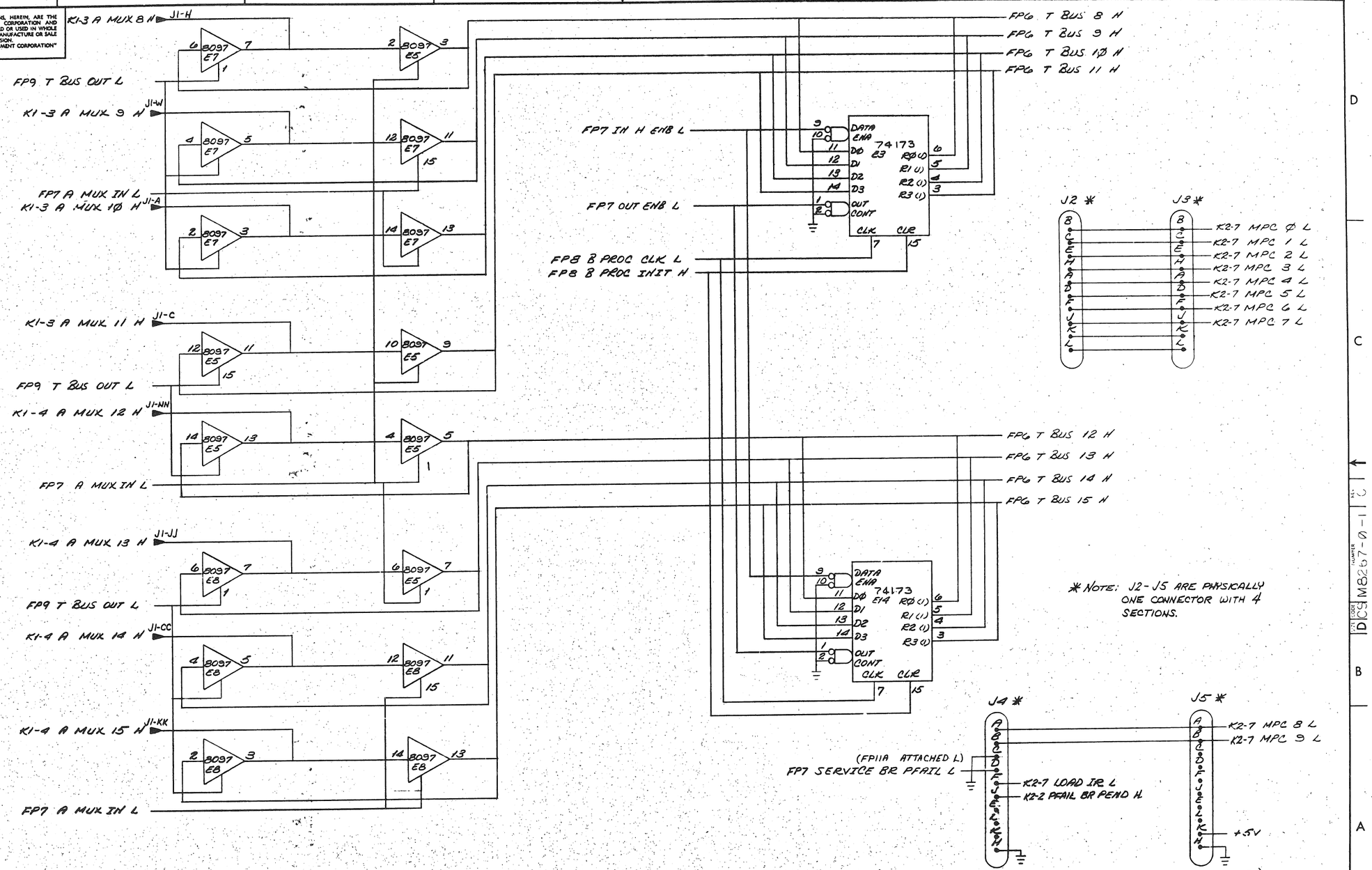

REVISIONS		
CHK	CHANGE NO.	REV.

TITLE	SIZE	CODE	NUMBER	REV.
FLOATING POINT PROCESSOR (FP6)	D	CS	M8267-0-1	C
SCALE —	SHEET 6 OF 10	DIST.		

DEC FORM NO. 2050 120

84

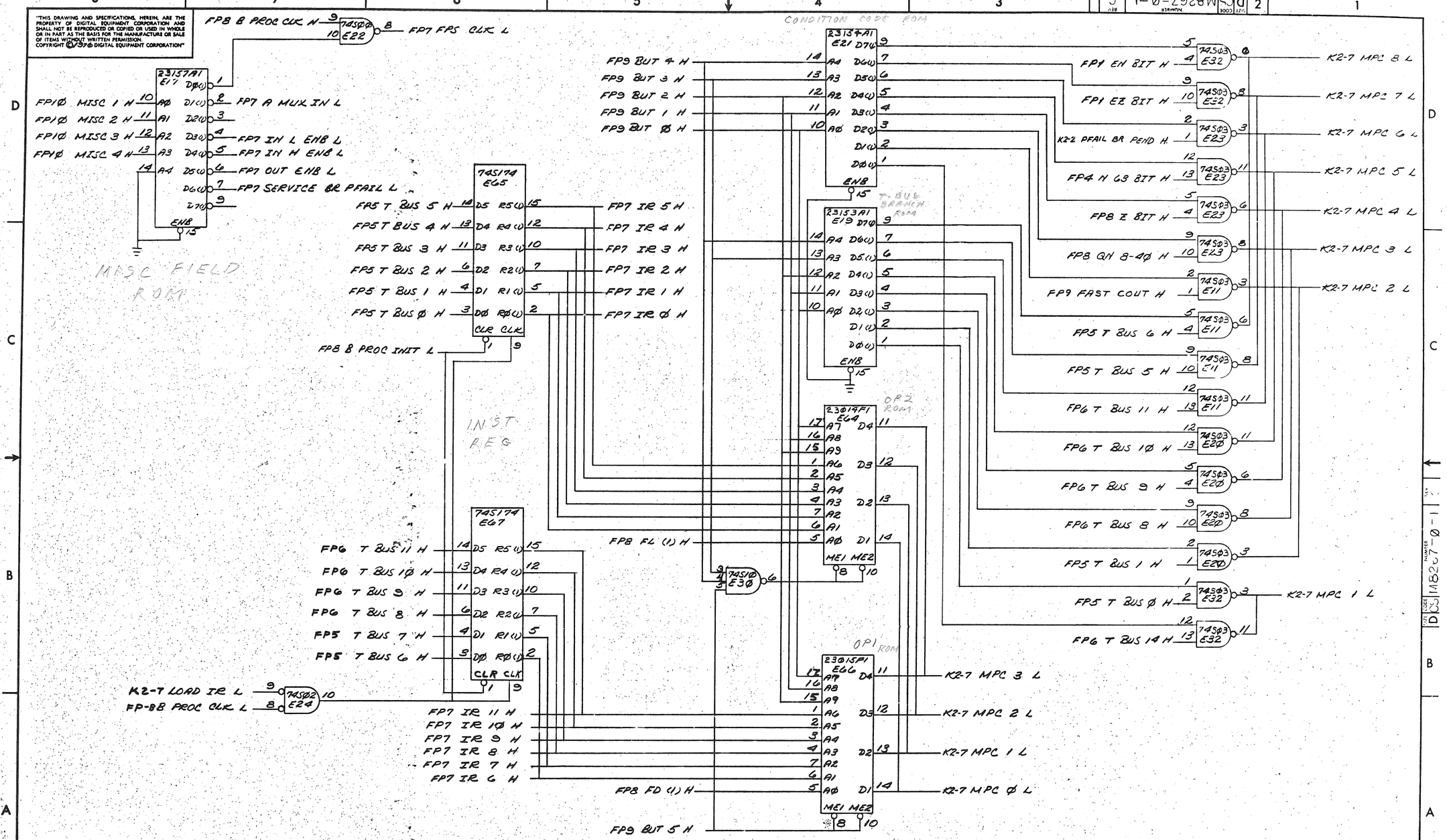

(IR REGISTER & DECODE, BRANCH LOGIC)

REVISIONS		
CHK	CHANGE NO.	REV.

TITLE	SIZE	CODE	NUMBER	REV.
FLOATING POINT PROCESSOR (FP7)	D	CS	M8267-Ø-1	C

SCALE — SHEET 7 OF 1Ø DIST.

85

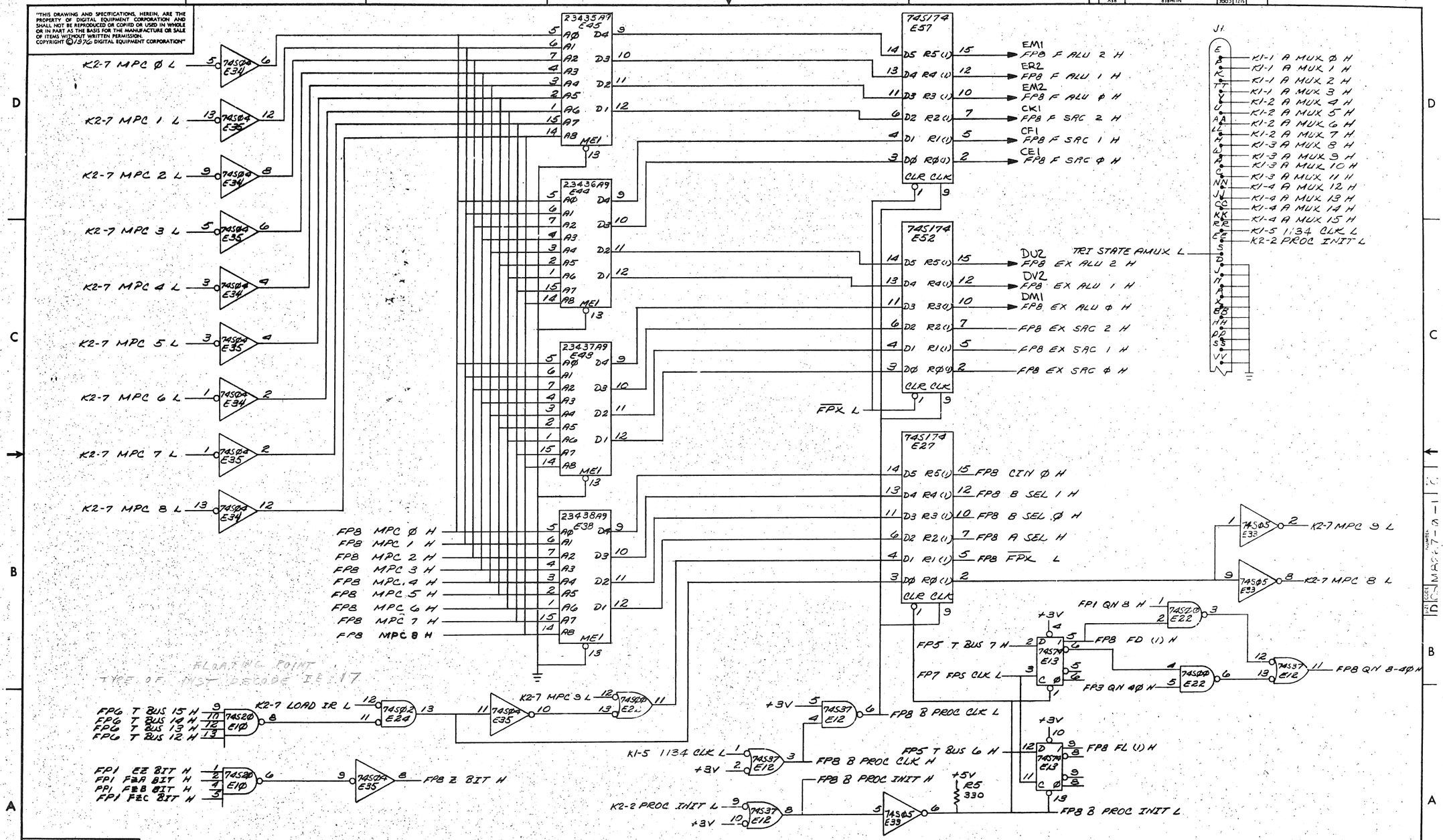

REVISIONS		
CHK	CHANGE NO.	REV.

TITLE	SIZE	CODE	NUMBER	REV.
FLOATING POINT PROCESSOR (FP8)	D	CS	M8267-Ø-1	C

SCALE — SHEET 8 OF 1Ø DIST.

DEC FORM NO. 000 120

86

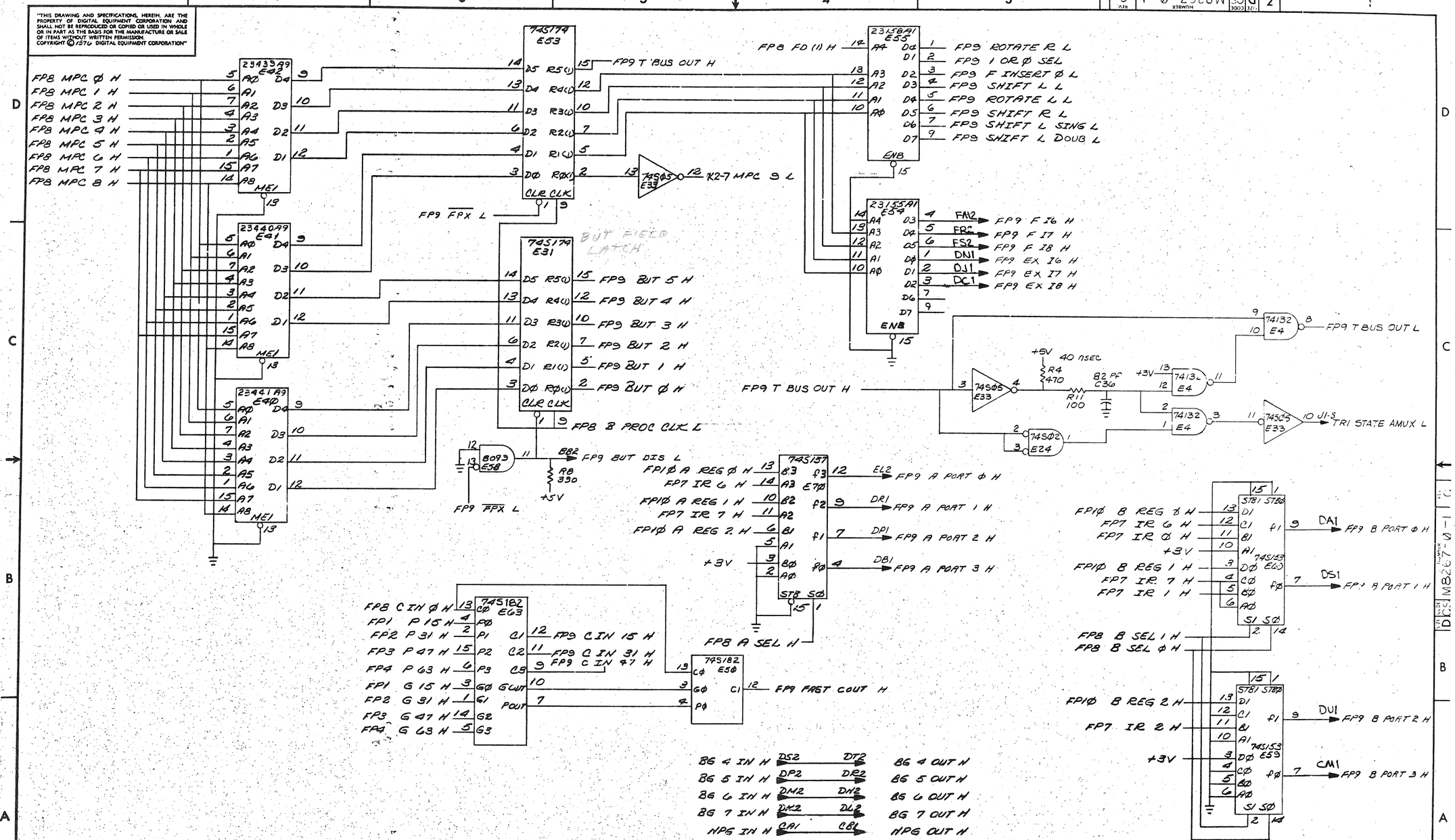

(A PORT MUX, B PORT MUX, BUT)

REVISIONS		
CHK	CHANGE NO.	REV.

TITLE	SIZE	CODE	NUMBER	REV.
FLOATING POINT PROCESSOR (FP9)	D	CS	M8267-0-1	C
SCALE H	SHEET 9 OF 10	DIST.		

87

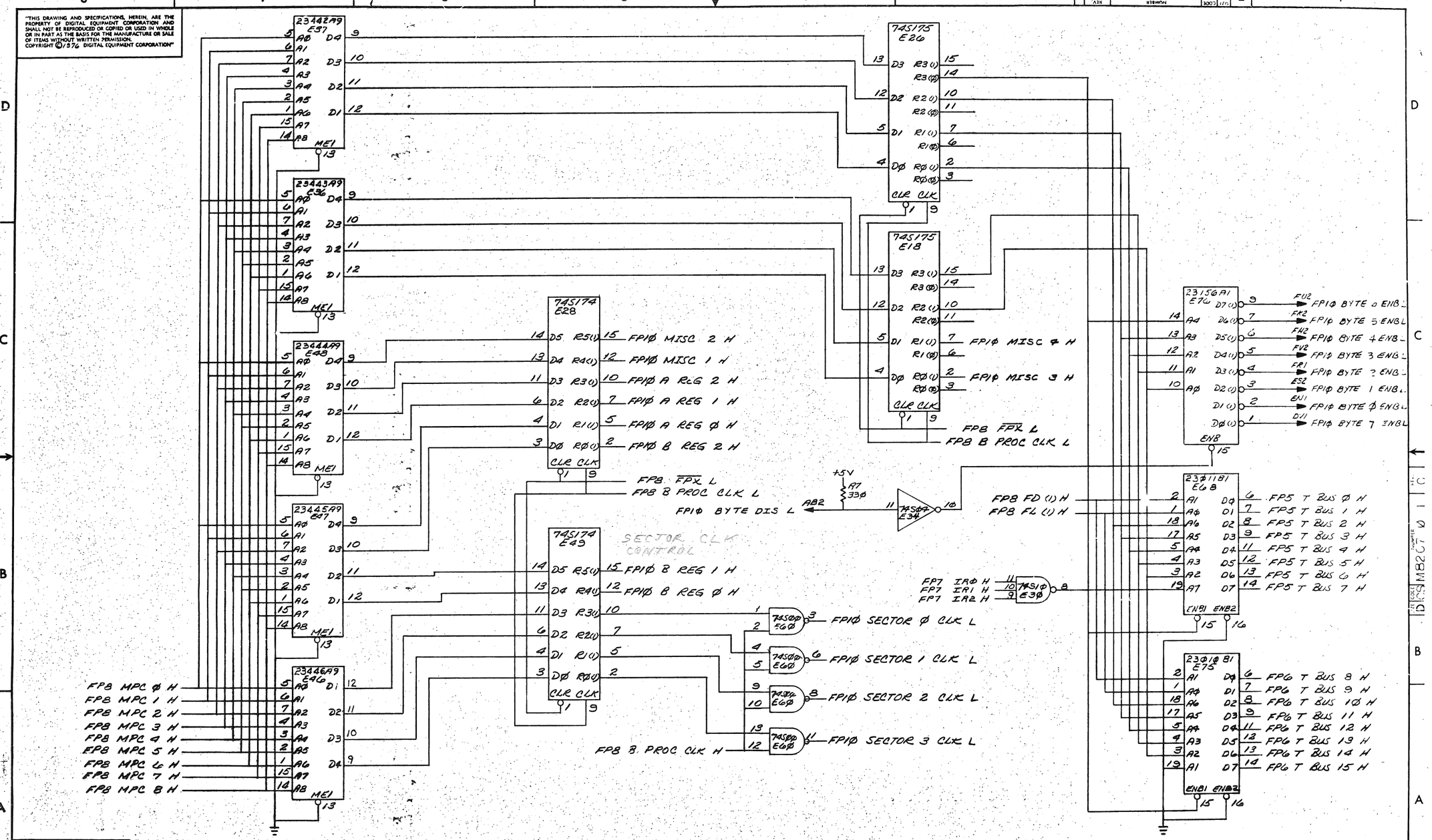

(CONSTANTS, BYTE ENABLE, CLOCKS)

REVISIONS		
CHK	CHANGE NO.	REV.

TITLE FLOATING POINT PROCESSOR (FPIØ)

SIZE D CODE CS NUMBER M8267-Ø-1 REV. C

SCALE — SHEET 1Ø OF 1Ø DIST.

88

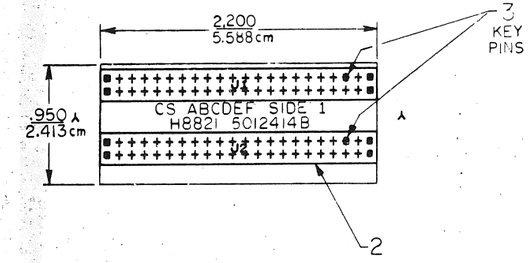

NOTES:

CHK	CHANGE NO	REV

ETCH REV. B
P.C. DESIGN DATA BASE REV. B

SIGNATURES	DATE
DRN. [illegible]	[illegible]
CHK'D. F SEIDMAN	12-3-76
ENG. R Barry	3DEC76
PROJ.ENG. R Barry	3DEC76
PROD. R Barry	6Dec76
SCALE 2/1	
SHT. 1 OF 3	
NEXT HIGHER ASSY. B-DD-H8821-0	

digital

TITLE 40 P.J. INTERCONNECT BOARD

SIZE	CODE	NUMBER	REV
D	[illegible]	[illegible]	A

1 MS# -0955

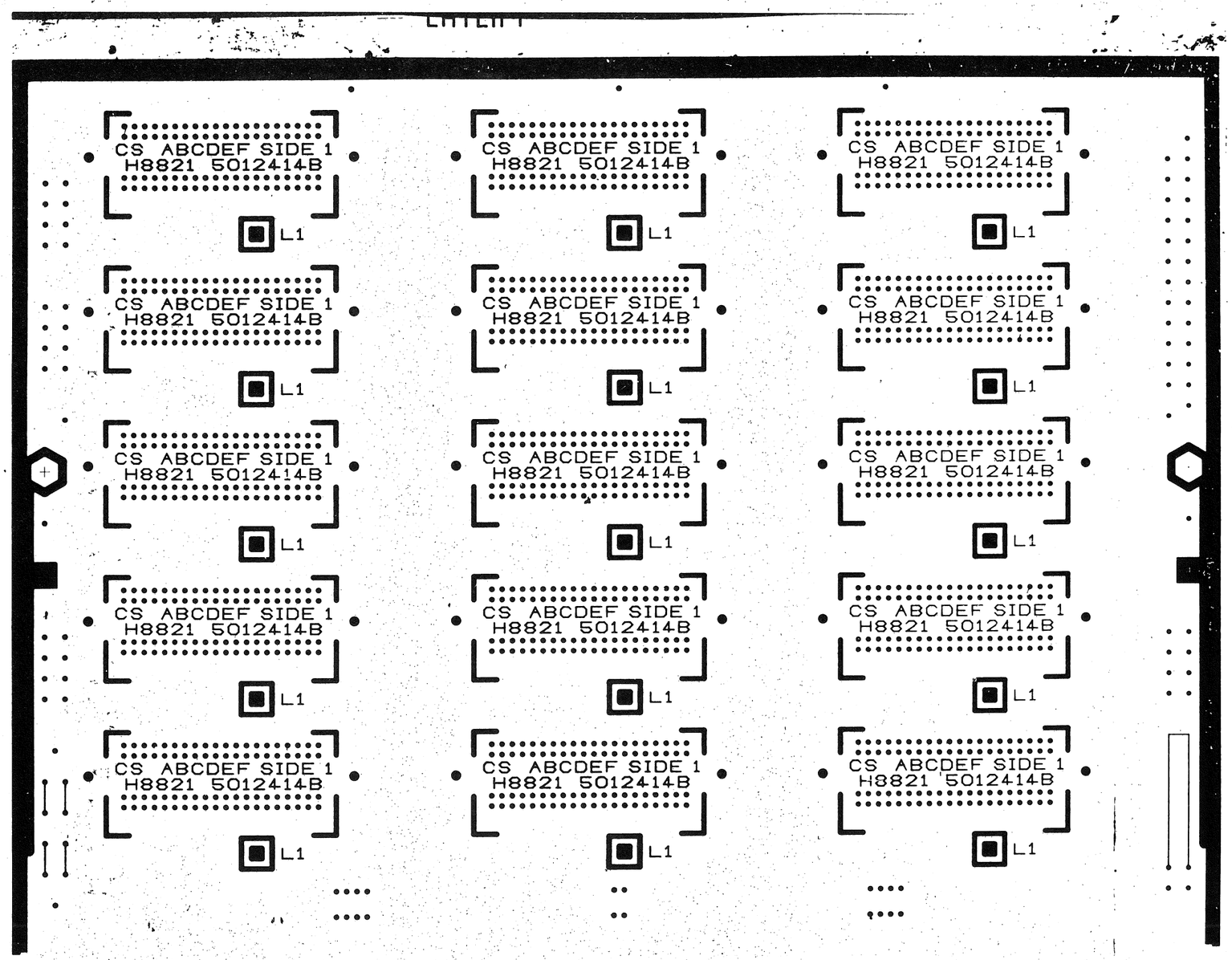

REVISIONS		
CHK	CHANGE NO.	REV.

TITLE	SIZE	CODE	NUMBER	REV.
40 PIN INTERCONNECT BOARD	D	UA	H8821-Ø-Ø	A
SCALE 2/1	SHEET 2 OF 3		DIST.	

DEC FORM NO. DRD 137

90

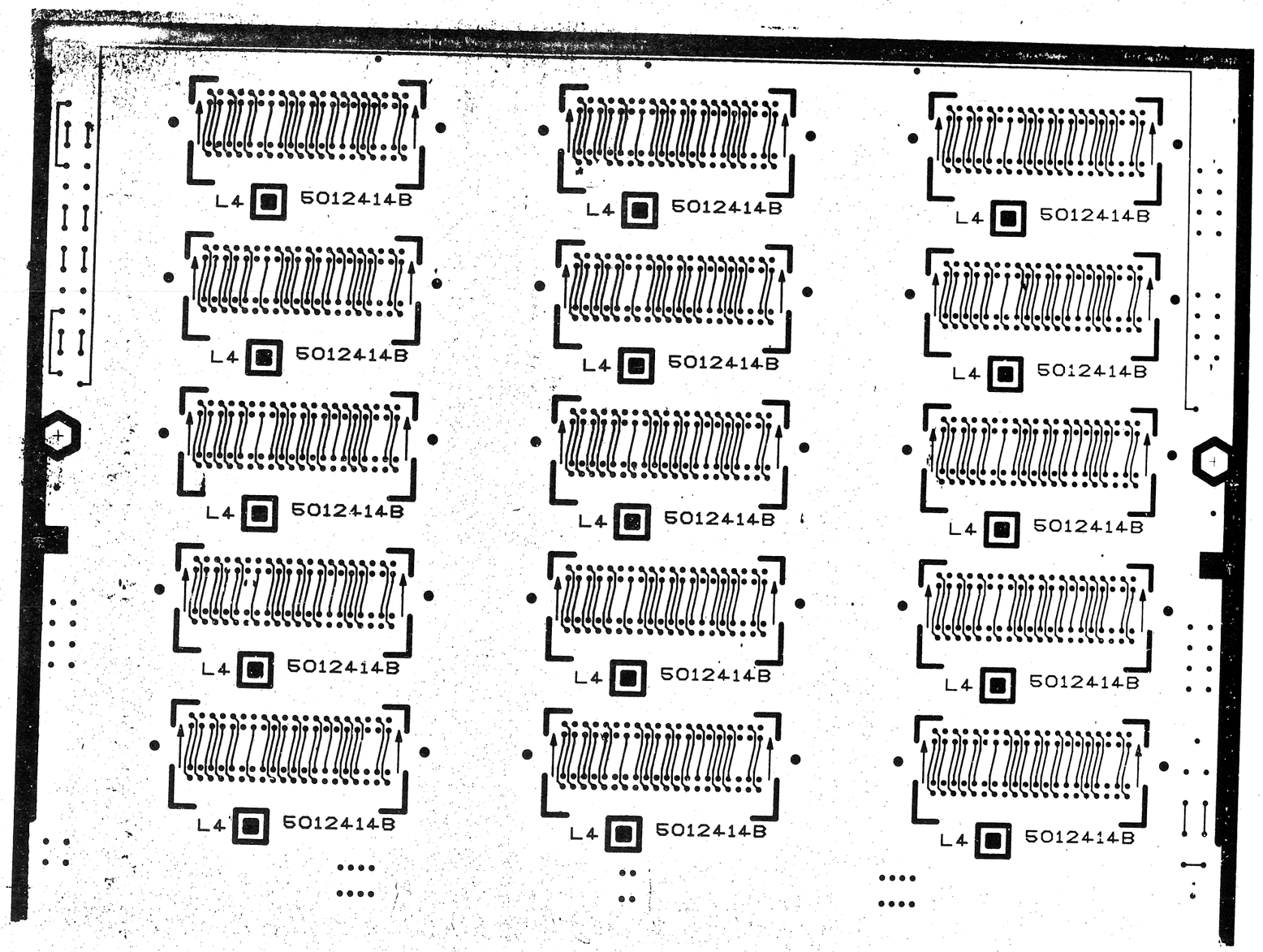

REVISIONS		
CHK	CHANGE NO.	REV.

TITLE	SIZE	CODE	NUMBER	REV.
40 PIN INTERCONNECT BOARD	D	UA	H8821-0-0	A
SCALE 2/1 SHEET 3 OF 3	DIST.			

DEC FORM NO. 050 137

91

DIGITAL EQUIPMENT CORPORATION
PARTS LIST

MADE BY [illegible] DATE [illegible]	CHECKED [illegible] DATE 5/12/76	SECTION
ENG R. Barry 3DEC76 DATE	PROD [illegible] DATE 6Dec76	ISSUED SECTION

ITEM NO.	DRAWING NO.	PART NO.	DESCRIPTION	QUANTITY/VARIATION H8821-Ø-Ø												REF DESIGNATION
1	D-MD-5Ø12414-Ø-Ø	5012414	ETCH BOARD	1												
2		12-13508-01	CONNECTOR, 44 PIN REWORKED	2												J1-J2
3		12-13508-03	KEY PINS	2												

NOTES:

E.C.O. NO.

TITLE 40 PIN INTERCONNECT BOARD

ASSY NO. D-UA-H6821-Ø-Ø

SHEET 1 OF 1

SIZE B | CODE PL | NUMBER H6821-Ø-Ø | REV. A

INSERTION PARTS LIST DATA BASE REV 11

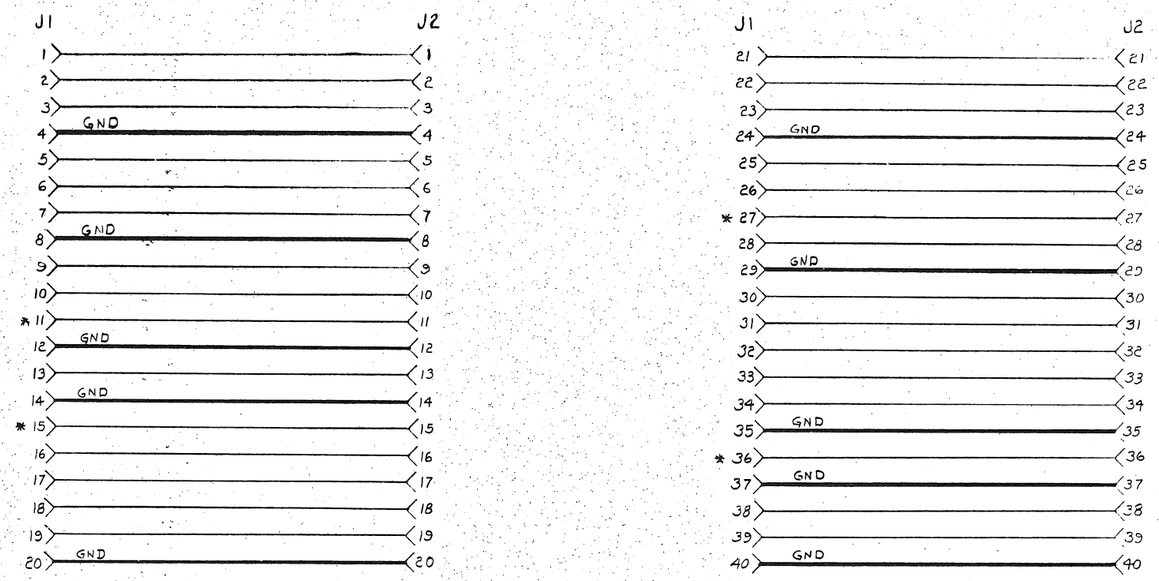

NOTES:

1. * DESIGNATES CONDUCTORS TO BE LOCATED ON LAYER 2
2. GND WILL BE ON LAYER 3 & REMAINING ETCH ON LAYER 4
3. LAYER 1 (SIDE 1) WILL BE FREE OF ALL CIRCUITRY

SIZE	CODE	NUMBER	REV.
C	CS	H8821-Ø-1	A

FIRST USED ON OPTION/MODEL	QTY.	DESCRIPTION	PART NO.	ITEM NO.
		PARTS LIST		

UNLESS OTHERWISE SPECIFIED DIMENSION IN INCHES

TOLERANCES

DECIMALS	ANGLES
.xxx = .005 .xx = .02 .x = .1	±0° 30'

REMOVE BURRS ANL BREAK SHARP CORNERS SURFACE QUALITY √

MATERIAL

FINISH

DRN. F. MULLIGAN	DATE 8/3/76	digital EQUIPMENT CORPORATION MAYNARD MASSACHUSETTS
CHK'D. L. Sedman	DATE 8/4/76	
ENG. R Barry	DATE 3 DEC 76	TITLE
PROJ. ENG. R Barry	DATE 3 DEC 76	40 PIN INTERCONNECT BOARD
PROD. [illegible]	DATE 6 DEC 76	
NEXT HIGHER ASSY.		
SCALE NA		
SHEET 1 OF 1		DIST.

SIZE	CODE	NUMBER	REV.
C	CS	H8821-Ø-1	A

REVISIONS		
CHK	CHANGE NO.	REV.

DEC FORM NO. DRC 111

93

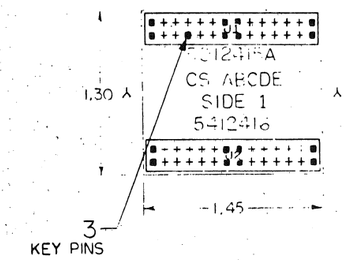

NOTES:

CHK	CHANGE NO	REV

ETCH REV. A
P.C. DESIGN DATA BASE REV. A

SIGNATURES	DATE
DRN.	
CHK'D.	
ENG.	
PROJ.ENG.	
PROD.	
SCALE 2/1	
SHT. 1 OF 3	
NEXT HIGHER ASSY. B-DD-5412416-0	

digital

TITLE MODULE INTERCONNECT BOARD

SIZE	CODE	NUMBER	REV
D		5412416-0	

94

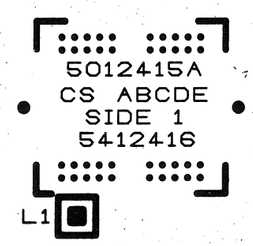

REVISIONS		
CHK	CHANGE NO.	REV.

TITLE	SIZE	CODE	NUMBER	REV.
MODULE INTERCONNECT BOARD	D	UA	5412416-Ø-Ø	*
SCALE 2/1 SHEET 2 OF 3	DIST.			

95

5012415A

5412416 L4

REVISIONS		
CHK	CHANGE NO. *	REV.

TITLE	SIZE	CODE	NUMBER	REV.
MODULE INTERCONNECT BOARD	D	UA	5412416-0-0	*
SCALE 2/1 SHEET 3 OF 3	DIST.			

DEC FORM NO. DRD 137

96

DIGITAL EQUIPMENT CORPORATION
PARTS LIST

MADE BY F. MULLIGAN	CHECKED F SEIDMAN	SECTION
DATE 8 AUG 76	DATE 9 AUG 76	
ENG R Barry 3 DEC 76	PROD RB King	ISSUED SECTION
DATE	DATE 6 DEC 76	

ITEM NO.	DRAWING NO.	PART NO.	DESCRIPTION	QUANTITY/VARIATION 5412416-0-0												NOTES: REF DESIGNATION
1	D-MD-5Ø12415-Ø-Ø	5012415	ETCH BOARD	1												
2		12-13508-00	CONNECTOR, 28 PIN REWORKED	2												J1-J2
3		12-13508-03	KEY PINS	1												

E.C.O. NO.

TITLE	ASSY NO.	SIZE	CODE	NUMBER	REV.
MODULE INTERCONNECT BOARD	D-UA-5412416-Ø Ø	B	PL	5412416-Ø-Ø	*
	SHEET 1 OF 1	INSERTION PARTS LIST DATA BASE REV —//—			

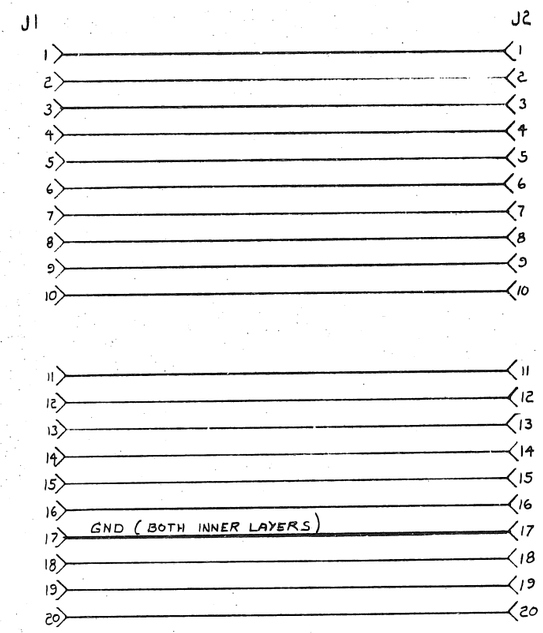

NOTE:
1- ALL ETCH ON SIDE 2 ONLY EXCEPT GND PLANES.

FIRST USED ON OPTION/MODEL	QTY.	DESCRIPTION	PART NO.	ITEM NO.
		PARTS LIST		

UNLESS OTHERWISE SPECIFIED
DIMENSION IN INCHES
TOLERANCES

DECIMALS	ANGLES
.xxx = .005 .xx = .02 .x = .1	±0° 30'

REMOVE BURRS AND BREAK SHARP CORNERS SURFACE QUALITY √

MATERIAL

FINISH

DRN. F. MULLIGAN	DATE 8/2/76	digital EQUIPMENT CORPORATION MAYNARD MASSACHUSETTS
CHK'D. F. Sudlman	DATE 8/4/76	
ENG. R Barry	DATE 3 Dec 76	TITLE
PROJ. ENG. R Barry	DATE 3 Dec 76	MODULE INTERCONNECT BOARD
PROD. R Bhing	DATE 6 Jan 76	
NEXT HIGHER ASSY.		
SCALE NA	SIZE C	CODE CS	NUMBER 5412416-Ø-1	REV. *
SHEET 1 OF 1	DIST.			

REVISIONS
REV.
CHANGE NO.
CHK

SIZE C CODE CS NUMBER 5412416-Ø-Ø REV *

DEC FORM NO. DRC 111

98

COMPONENT SIDE VIEW

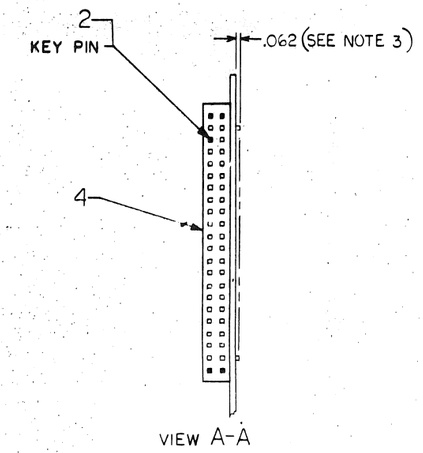

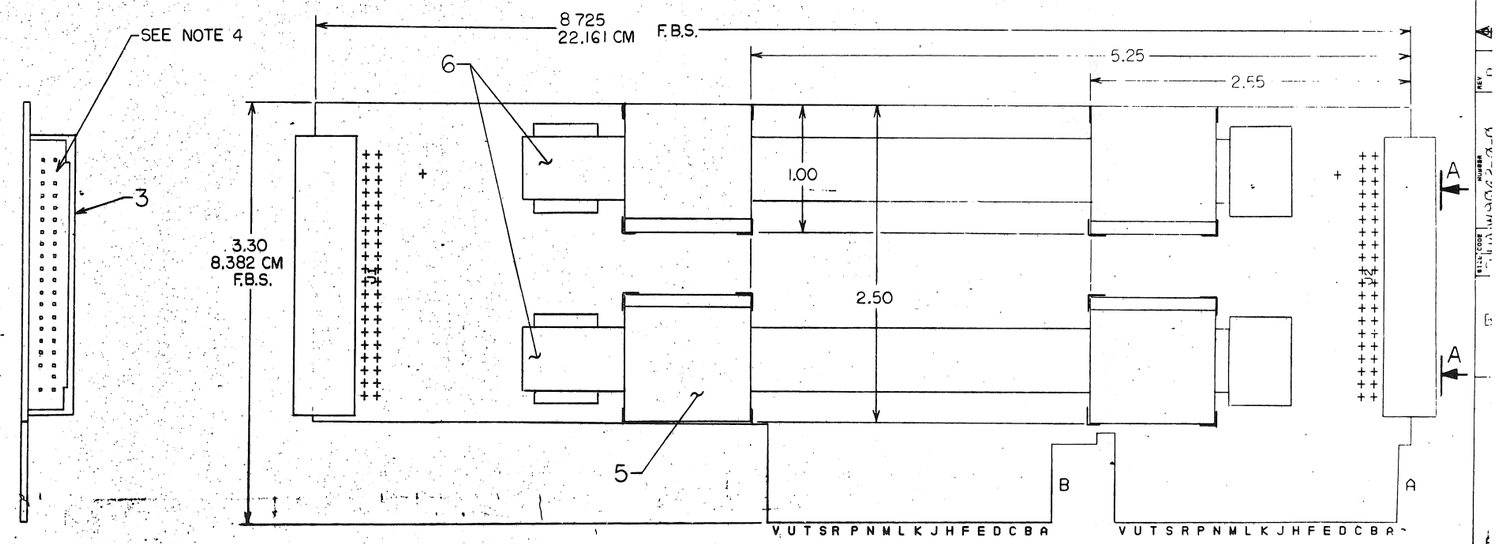

NOTES:
1. THIS MODULE CAN BE USED AS A JUMPER CONTINUITY CARD.
2. ITEM 6 CABLES ARE USED FOR MAINTENANCE PURPOSES. ON THE FP11A OPTIONS. SEE E-UA-FP11A-0-0.
3. TRIM ITEM 4 LEADS AFTER MOUNTING.
4. REMOVE PIN INDICATED. (TO REMOVE PIN, STRAIGHTEN BACK END AND PULL OUT FROM FRONT OF CONNECTOR.)
5. USE CABLE CLAMPS ITEM 5 TO STORE CABLES ITEM 6 WHEN NOT IN USE.

CHG	CHANGE NO	REV
	WORK ORDER	C
	TRIG.	
	R. BLANK	

ETCH REV. C
P.C. DESIGN DATA BASE REV. C-P1

SIGNATURES	DATE
DRN. F. MILLIGAN	7 DEC 76
CHK'D. R. PUZZO	11/9/76
ENG. R. Barry	8 DEC 76
PROJ. ENG. R. Barry	8 DEC 76
PROD. R. B. Kyle	8 DEC 76
SCALE 2/1	
SHT. 1 OF 3	
NEXT HIGHER ASSY. B-DD-W9Ø42-Ø	

digital

TITLE
EXTENDER BOARD ASSEMBLY

SIZE	CODE	NUMBER	REV
D	UA	W9Ø42-Ø-Ø	B

MS#

REVISIONS		
CHK	CHANGE NO.	REV.

TITLE EXTENDER BOARD ASSEMBLY

SCALE 2:1 SHEET 2 OF 3

D UAW9042-0-0 B

100

REVISIONS		
CHK	CHANGE NO.	REV.

EXTENDER BOARD ASSEMBLY	D	UA	W9042-0-0
SCALE 2:1	SHT 3 OF 3	DIST	B

101

DIGITAL EQUIPMENT CORPORATION
PARTS LIST

MADE BY F. MULLIGAN	CHECKED F. MALANSON	SECTION
DATE 12 AUG. 76	DATE 15 SEPT. 76	
ENG R. Barry	PROD RBKing	ISSUED SECTION
DATE 1 DEC 76	DATE 1 Dec 76	

NOTES:

ITEM NO.	DRAWING NO.	PART NO.	DESCRIPTION	QUANTITY/VARIATION W9042-0-0	REF DESIGNATION
1	D-MD-5Ø12447-Ø-Ø	5012447	ETCH BOARD	1	
2		1213508-03	KEY FOR SOCKET CONN., 40 PIN	1	
3		1213506-01	CONNECTOR, AMP, 40POS 39 PIN	1	J2
4		1213947-00	CONNECTOR, WINCHESTER, 44POS	1	J1
5		9009636-00	3M CABLE CLAMP	4	
6		7Ø11411-1D	10POS FLAT CABLE	2	

E.C.O. NO. 00001

TITLE	ASSY NO.	SIZE	CODE	NUMBER	REV
EXTENDER BOARD ASSY	D-UA-W9Ø42-Ø-Ø	B	PL	W9Ø42-Ø-Ø	B
	SHEET 1 OF 1	INSERTION PARTS LIST DATA BASE REV A			

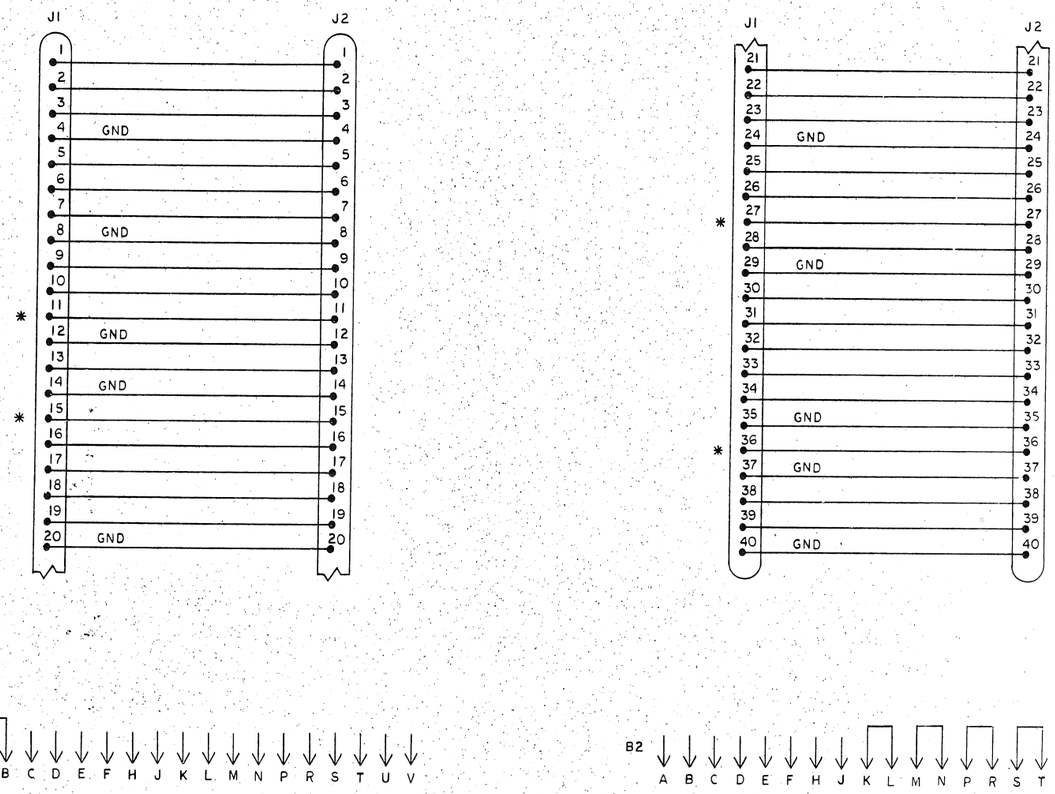

NOTE: 1. (*) DESIGNATES ETCH CONNECTION ON LAYER 2

REVISIONS		
CHG	CHANGE NO.	REV.
	W9042-00001	B
	D. MOBERLY	

DEC FORM NO. SRD 1024

DRN.		FIRST USED ON
CHK'D		digital
ENG. R Barry	1 DEC 76	TITLE EXTENDER BOARD ASSEMBLY
PROJ. ENG. R Barry	1 DEC 76	
PROD. R Barry	1 Dec 76	
NEXT HIGHER ASSY.		
SCALE		SIZE D / CODE CS / NUMBER W9042-00-1 / REV. B
SHEET 1 OF 1		DIST.

103

DIGITAL EQUIPMENT CORPORATION
MAYNARD, MASSACHUSETTS

PARTS LIST

MADE BY D. HEALY	CHECKED D. HEALY	SECTION 1
DATE 10 NOV. 76	DATE 10 NOV. 76	
ENG [illegible]	PROD [illegible]	ISSUED SECT. 1
DATE 11-26-76	DATE [illegible]	

ITEM NO	DWG NO./PART NO.	DESCRIPTION	QUANTITY/VARIATION FP11-A
	MPØØ189	FP11-A FIELD MAINTENANCE PRINT SET	1
	EK-FP11-A-TM-PRE	FP11-A FLOATING POINT MANUAL	1
	ZJ232-RB	SOFTWARE LIBRARY KIT (PAPER TAPE)	1

TITLE	ASSY NO.	SIZE	CODE	NUMBER	REV	ECO NO.
FP11-A SHIPPING LIST	NONE	A	PL	FP11-A-3		
	SHEET 1 OF 1	DIST.				

DEC FORM DEC 10 (325) 1031 N870
DRA 110

104

FPII-A CONTROL WORD (WITHIN M8266)

PROM DESIGNATION NUMBER	E110				E109				E108				E107				E106				E99				E97				E98				E100				E104				E103				E105			
PROM PIN NUMBER	11	12	13	14	11	12	13	14	11	12	13	14	11	12	13	14	11	12	13	14	11	12	13	14	11	12	13	14	11	12	13	14	11	12	13	14	11	12	13	14	11	12	13	14	11	12	13	14
MICRO FIELD BIT NUMBER	0	1	2	3	4	5	6	7	8	9	10	11	12	13	14	15	16	17	18	19	20	21	22	23	24	25	26	27	28	29	30	31	32	33	34	35	36	37	38	39	40	41	42	43	44	45	46	47
DEFAULT STATE OF MICRO FIELD	0	0	0	0	0	0	0	0	0	0	0	0	0	0	0	0	0	0	0	0	0	0	0	0	0	0	0	0	0	0	0	0	0	0	0	0	0	0	1	1	1	1	0	0	0	0	0	0
MPC BIT NUMBER	8	7	6	5	4	3	2	1	0																																							

JUMP

(NOP) MISC CTRL

(NOP) DATA TRAN

(DAT I) BUS CRTL

(NOP) ENAB MAINT

(NOP) LOAD BA

(SHORT) CYCLE

ALU BLEG (A)

BBX CTRL (HOLD)

SSMUX (STRT)

AMUX (ALU)

BUT BITS (NOP)

SRC SEL (ROM)

DST SEL (RBA)

BUT SERV (NOP)

RSPA (RI7)

(1) NOTE THAT BITS 18, 40, 43, AND 44 ARE NOT USED IN THE FLOATING POINT SECTION OF THE 1134 CONTROL STORE (UPPER 512 LOCATIONS)

FPII-A CONTROL WORD (WITHIN M8267)

	E45				E44				E43				E38				E42				E41				E40				E37				E36				E48				E47				E46			
	9	10	11	12	9	10	11	12	9	10	11	12	9	10	11	12	9	10	11	12	9	10	11	12	9	10	11	12	9	10	11	12	9	10	11	12	9	10	11	12	9	10	11	12	9	10	11	12
	48	49	50	51	52	53	54	55	56	57	58	59	60	61	62	63	64	65	66	67	68	69	70	71	72	73	74	75	76	77	78	79	80	81	82	83	84	85	86	87	88	89	90	91	92	93	94	95
	0	0	0	0	1	1	0	0	0	0	0	0	0	0	1	0	0	0	0	0	0	1	0	0	0	0	0	0	0	0	1	0	0	0	1	0	0	1	0	0	0	0	0	0	1	1	1	1
																						9																								3	2	1	0

SECTOR NUMBER

SECT (SI7)

BROM (BRIO)

AROM (ARIO)

MISC (NOP)

CONST (BYTE76)

BUT (NOP)

RET (STAY)

MPC BIT NUMBER

(BPLUS) FCTL

(BPLUS) ECTL

(ZERO) ECIN

(BROM) BSEL

(AROM) ASEL

(1134←TBUS) TOUT

DCTL (NOP)

MICRO FIELD DEFAULT OPERATION (IF ANY)

MICRO FIELD SYMBOLIC NAME

REVISIONS	REV.	CHANGE NO.	CHK

DRN.		
CHK'D		
ENG.		
PROJ. ENG.		17 Jun 77
PROD.		17 Jun 77
NEXT HIGHER ASSY.	B-DD-FPII-A	
SCALE		
SHEET	1 OF 40	

FIRST USED ON FPII-A

digital

TITLE FPII-A FLOW DIAGRAMS

SIZE	CODE	NUMBER	REV.
D	FD	FPII-A-2	

DIST.

DEC FORM NO. DRD 102-0

105

KEY TO MICRO FLOW SYMBOLOGY

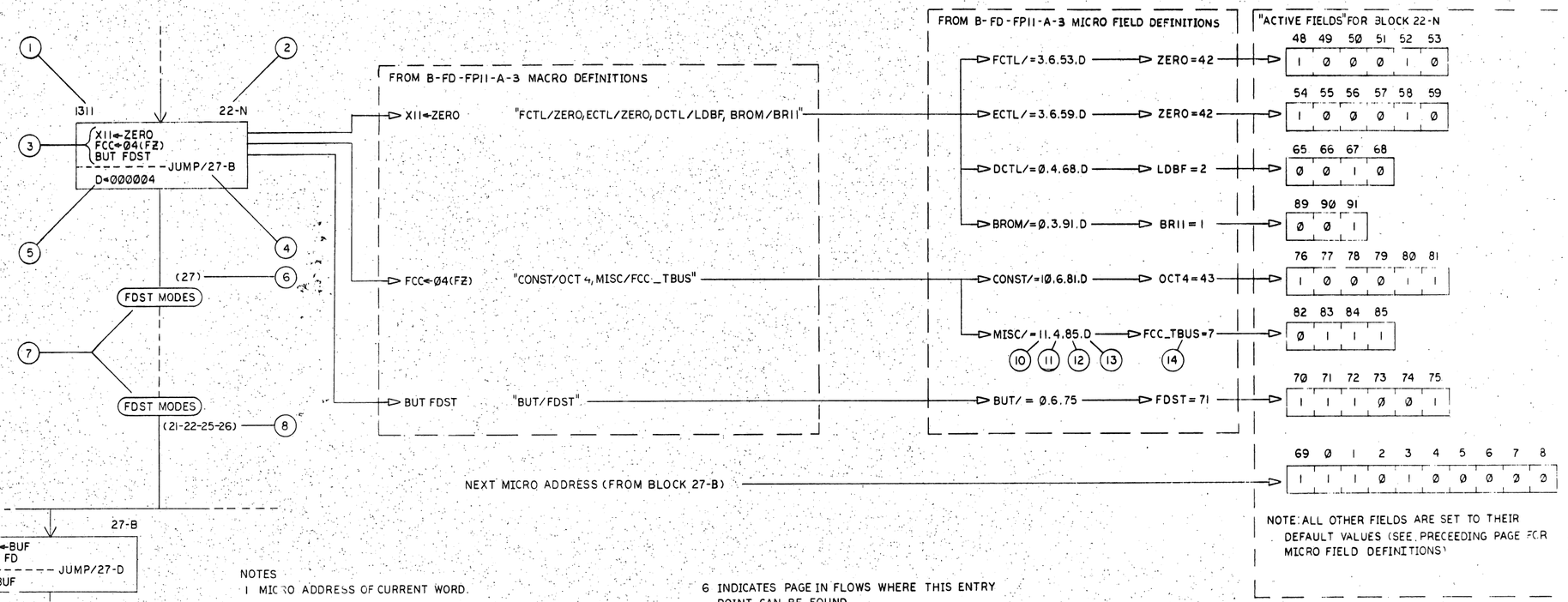

NOTES

1 MICRO ADDRESS OF CURRENT WORD.

2 SYMBOLIC TAG OF CURRENT WORD CONSISTS OF PAGE NUMBER AND BLOCK LABEL (PAGE-BLOCK)

3 MICRO OPERATIONS WHICH TAKE PLACE DURING THIS STATE. THE FIELDS WHICH ARE INVOLVED IN CARRYING OUT THESE OPERATIONS CAN BE DETERMINED USING:
FP11-A MACRO DEFINITIONS
FP11-A MICRO FIELD DEFINITIONS

4 27-B IS THE SYMBOLIC TAG OF THE NEXT MICRO WORD (TARGET) ASSUMING NO BRANCHING (DESTINATION MODE Ø) THIS CAN BE USED TO DETERMINE THE NEXT ADDRESS FIELD OF THE CURRENT MICRO WORD.

5 "D" STANDS FOR DISPLAY. IN THIS CASE, 000004 WILL APPEAR ON THE CONSOLE DISPLAY IF OPERATING IN MAINTENANCE MODE.

6 INDICATES PAGE IN FLOWS WHERE THIS ENTRY POINT CAN BE FOUND.

7 EXIT AND ENTRY LABELS ARE USED TO INDICATE LOGICAL FLOW FROM PAGE TO PAGE.

8 INDICATES PAGES IN FLOWS FROM WHICH ENTRY POINT IS CALLED.

9 THIS ADDRESS IS THE TARGET OF THE JUMP FIELD OF BLOCK 22-N

10 DEFAULT VALUE OF THIS FIELD

11 NUMBER OF BITS IN THIS FIELD

12 LOCATION OF RIGHT MOST BIT OF THIS FIELD WITHIN MICRO WORD.

13 INDICATES THAT THE DEFAULT IS TAKEN IF NOTHING ELSE IS SPECIFIED

14 OCTAL VALUE OF MICRO FIELD LITERAL

REVISIONS		
CHK	CHANGE NO.	REV.

TITLE: FP11-A FLOWS
SIZE: D CODE: FD NUMBER: FP11-A-2 REV.
SCALE: SHEET 2 OF 40 DIST.

DEC FORM NO. DRD 138

106

FPII-A TYPICAL REGISTER USAGE

17		FPS		
16			FCCR	
15			FEC	
14			ZERO	EFSRC
13			ZERO	EAC
12		FSRC	S	E
11		AC	S	E
10	E	FSRC (BECOMES SIGN)	S	E
7				
6				
5	E	AC5	S	E
4	E	AC4	S	E
3	E	AC3	S	E
2	E	AC2	S	E
1	E	AC1	S	E
Ø	E	ACØ	S	E

SECTOR3	SECTOR 2		SECTOR 1		SECTOR Ø		SECTOR 3
BYTE 6	BYTE 5	BYTE 4	BYTE 3	BYTE 2	BYTE 1	BYTE Ø	BYTE 7
F-REG							E-REG
X-REG							

FPII-A TS BUS ASSIGNMENT

TSØ		Y8
TS1		Y9
TS5	FT	Y61
TS6		Y62
TS8	FIC	
TS9	FIV	
TSIØ	[illegible]	
TS11	FIU	
TS14	FID	

FPII-A MPC BUTOFF BITS

MPC	1134	FPX TS BUT	FPX CONDITIONS	FPX BUT OP1	FPX BUT OP2
Ø	IRØ9	—	—	OPIØ	OP2Ø
1	ZBIT	TSØ	TS14	OPI1	OP21
2	CØ5	TS1	XOUT	OPI2	OP22
3	SPI5	TS8	Q8-Q4Ø	OPI3	OP23
4	BXØØ	TS9	XZBT	—	—
5	BXØ1	TSIØ	XNBT	—	—
6	NBIT	TS11	BUSRQ	—	—
7	COUT	TS5	EZBT	—	—
8		TS6	ENBT	—	—

FLOATING POINT STATUS REGISTER

15	14	13	12	11	10	9	8	7	6	5	4	3	2	1	Ø
FER	FID	X	X	FIUV	FIU	FIV	FIC	FD	FL	FT	X	FN	FZ	FV	FC
	INTERRUPT ENABLES							MODE BITS				CONDITION CODES			

REVISIONS		
CHK	CHANGE NO.	REV.

TITLE	SIZE	CODE	NUMBER	REV.
FPII-A FLOWS	D	FD	FPII-A-2	
SCALE	SHEET 3 OF 40	DIST.		

107

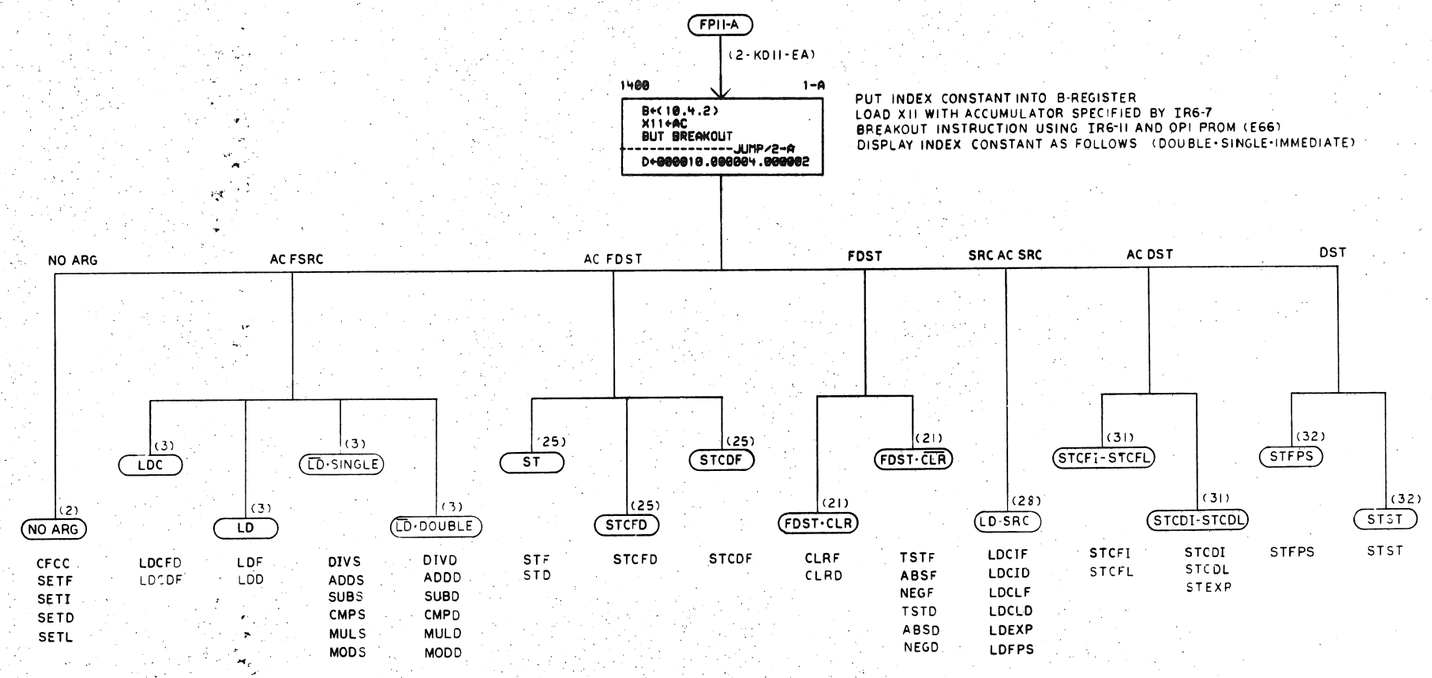

REVISIONS		
CHK	CHANGE NO.	REV.

TITLE	SIZE	CODE	NUMBER	REV.
FPII-A FLOWS (i)	D	FD	FPII-A-2	
SCALE —	SHEET 4 OF 42	DIST.		

108

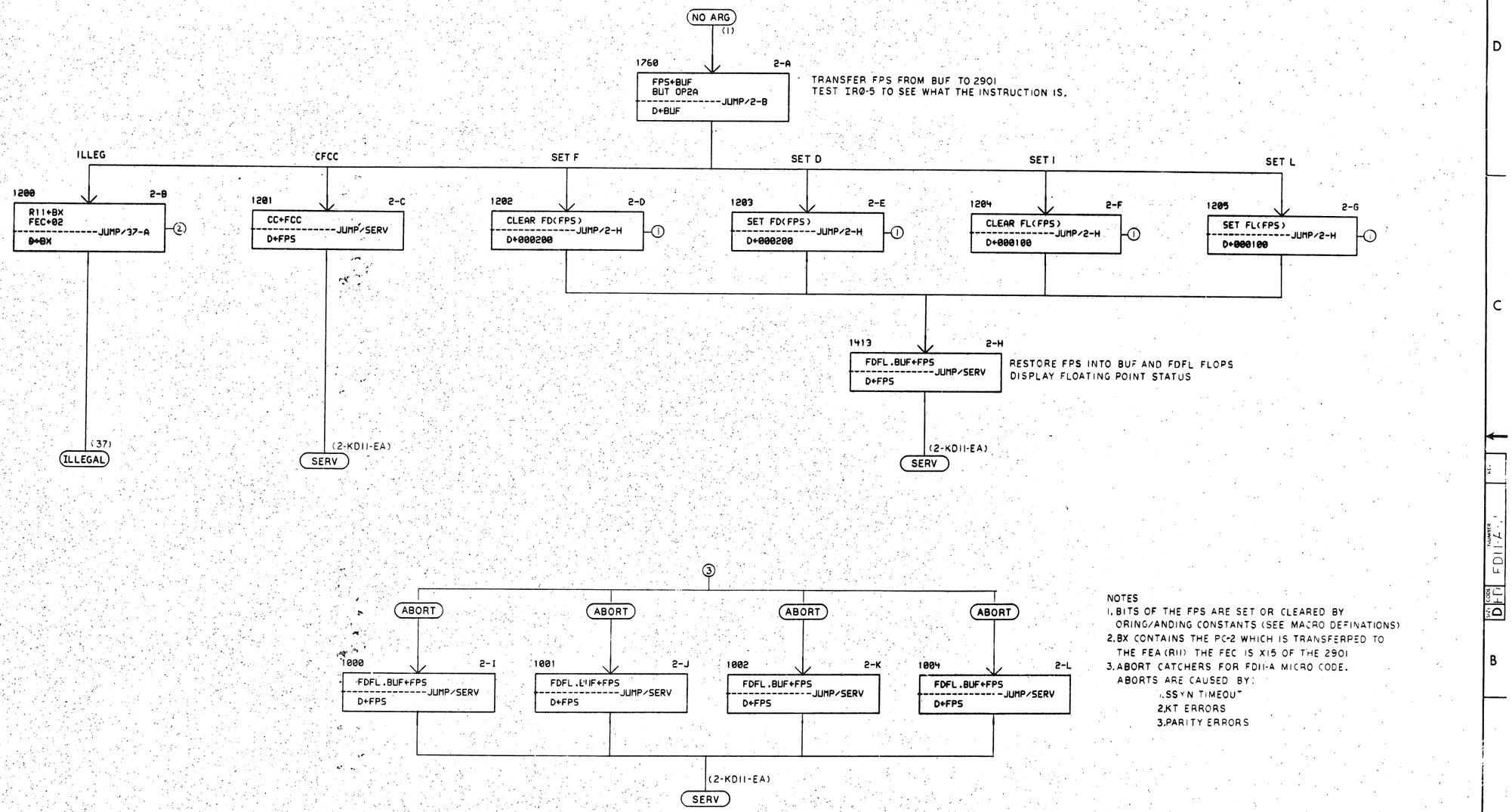

NOTES
1. BITS OF THE FPS ARE SET OR CLEARED BY ORING/ANDING CONSTANTS (SEE MACRO DEFINATIONS)
2. BX CONTAINS THE PC+2 WHICH IS TRANSFERPED TO THE FEA(R11) THE FEC IS X15 OF THE 2901
3. ABORT CATCHERS FOR FD11-A MICRO CODE.
   ABORTS ARE CAUSED BY:
   1. SSYN TIMEOUT
   2. KT ERRORS
   3. PARITY ERRORS

REVISIONS		
CHK	CHANGE NO.	REV.

TITLE	SIZE	CODE	NUMBER	REV.
FP11-A FLOWS (2)	D	FD	FP11-A-2	
SCALE	SHEET 2 OF 40		DIST.	

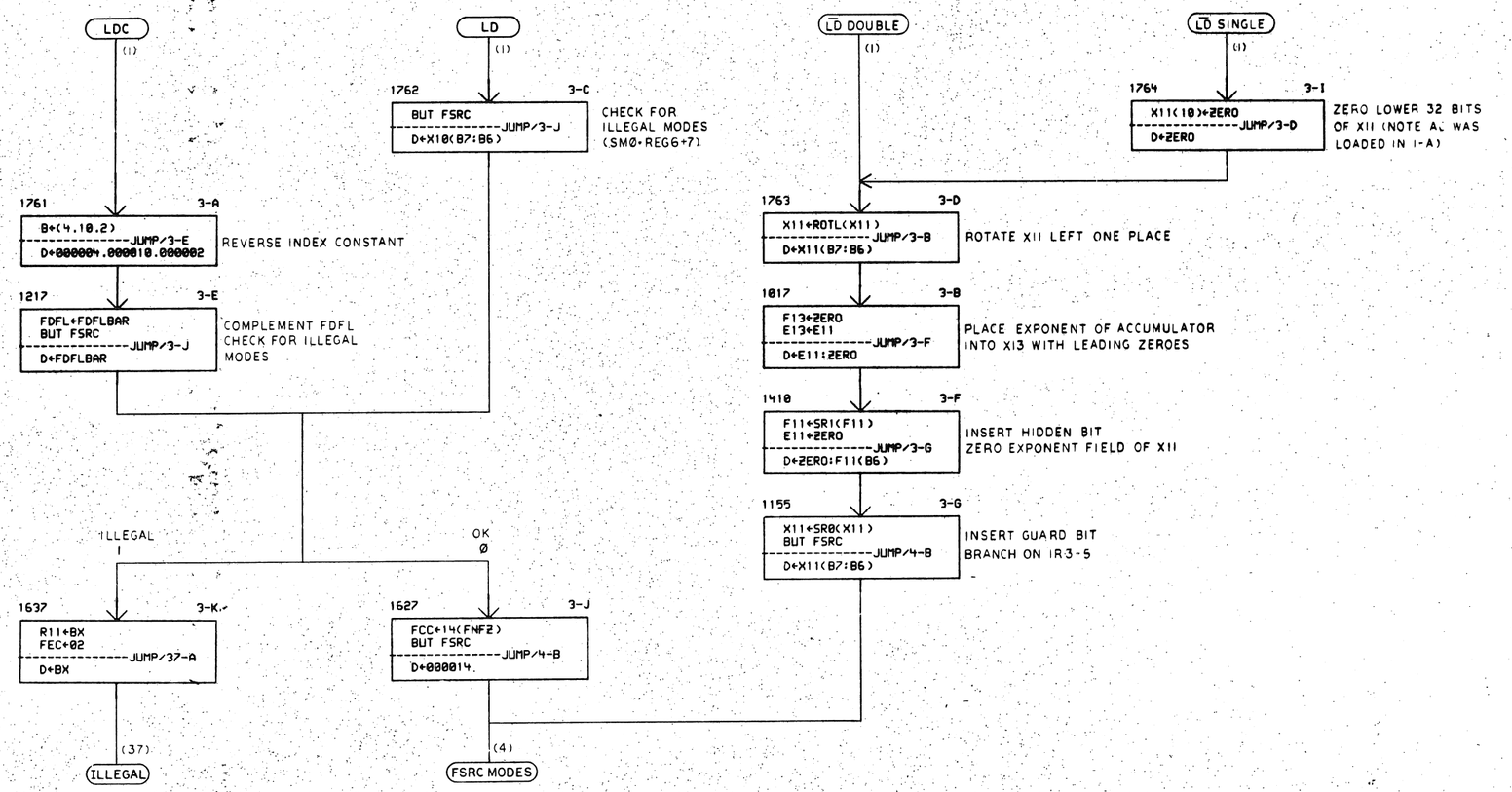

REVISIONS		
CHK	CHANGE NO.	REV.

TITLE	SIZE	CODE	NUMBER	REV.
FP11-A FLOWS (3)	D	FD	FP11-A-2	
SCALE	SHEET 6 OF 40	DIST.		

110

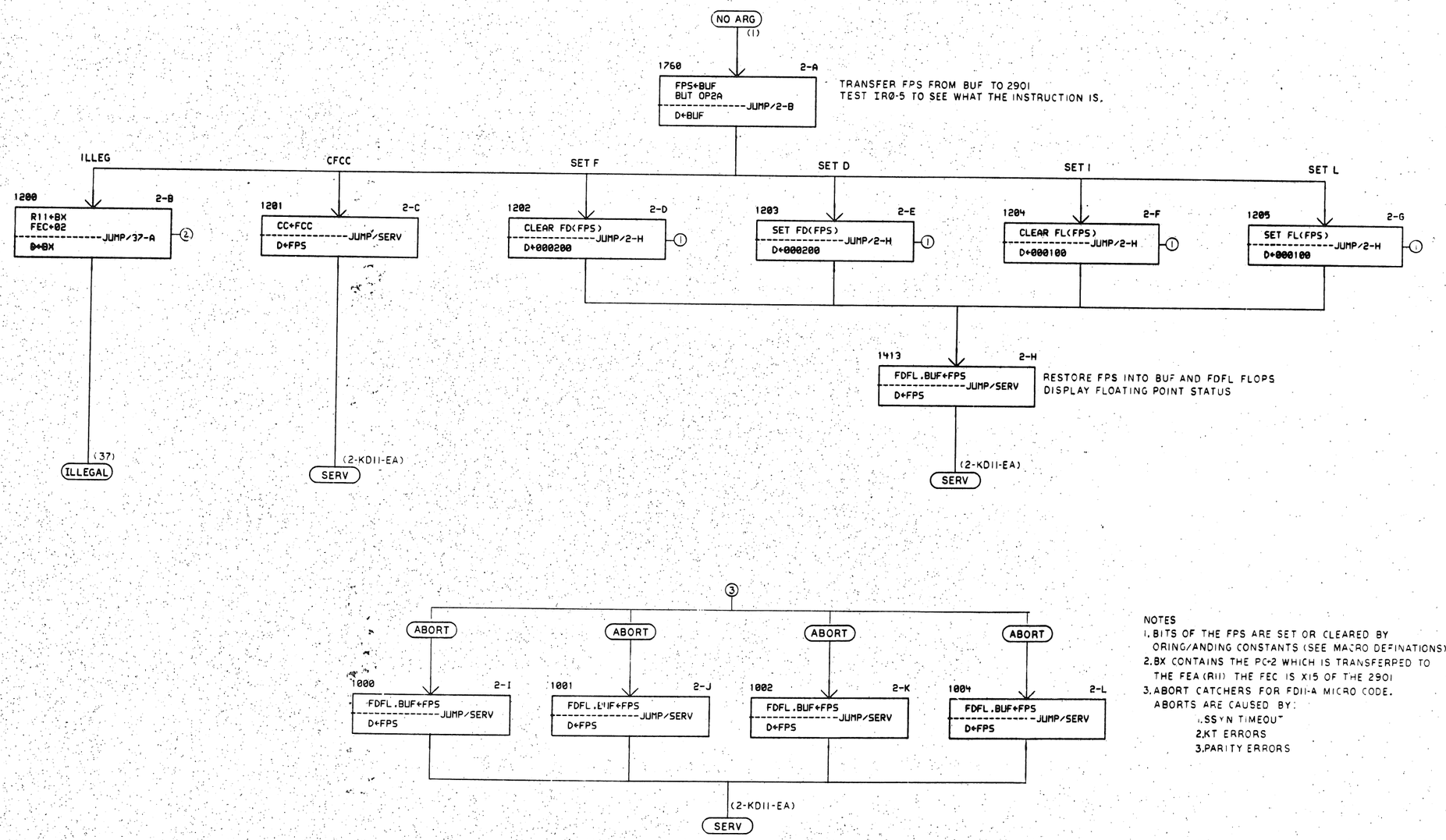

NOTES
1. BITS OF THE FPS ARE SET OR CLEARED BY ORING/ANDING CONSTANTS (SEE MACRO DEFINATIONS)
2. BX CONTAINS THE PC+2 WHICH IS TRANSFERPED TO THE FEA (R11) THE FEC IS X15 OF THE 2901
3. ABORT CATCHERS FOR FD11-A MICRO CODE.
   ABORTS ARE CAUSED BY:
   1. SSYN TIMEOUT
   2. KT ERRORS
   3. PARITY ERRORS

REVISIONS		
CHK	CHANGE NO.	REV.

TITLE	SIZE	CODE	NUMBER	REV.
FP11-A FLOWS (2)	D	FD	FP11-A-2	
SCALE	SHEET 2 OF 40	DIST.		

109

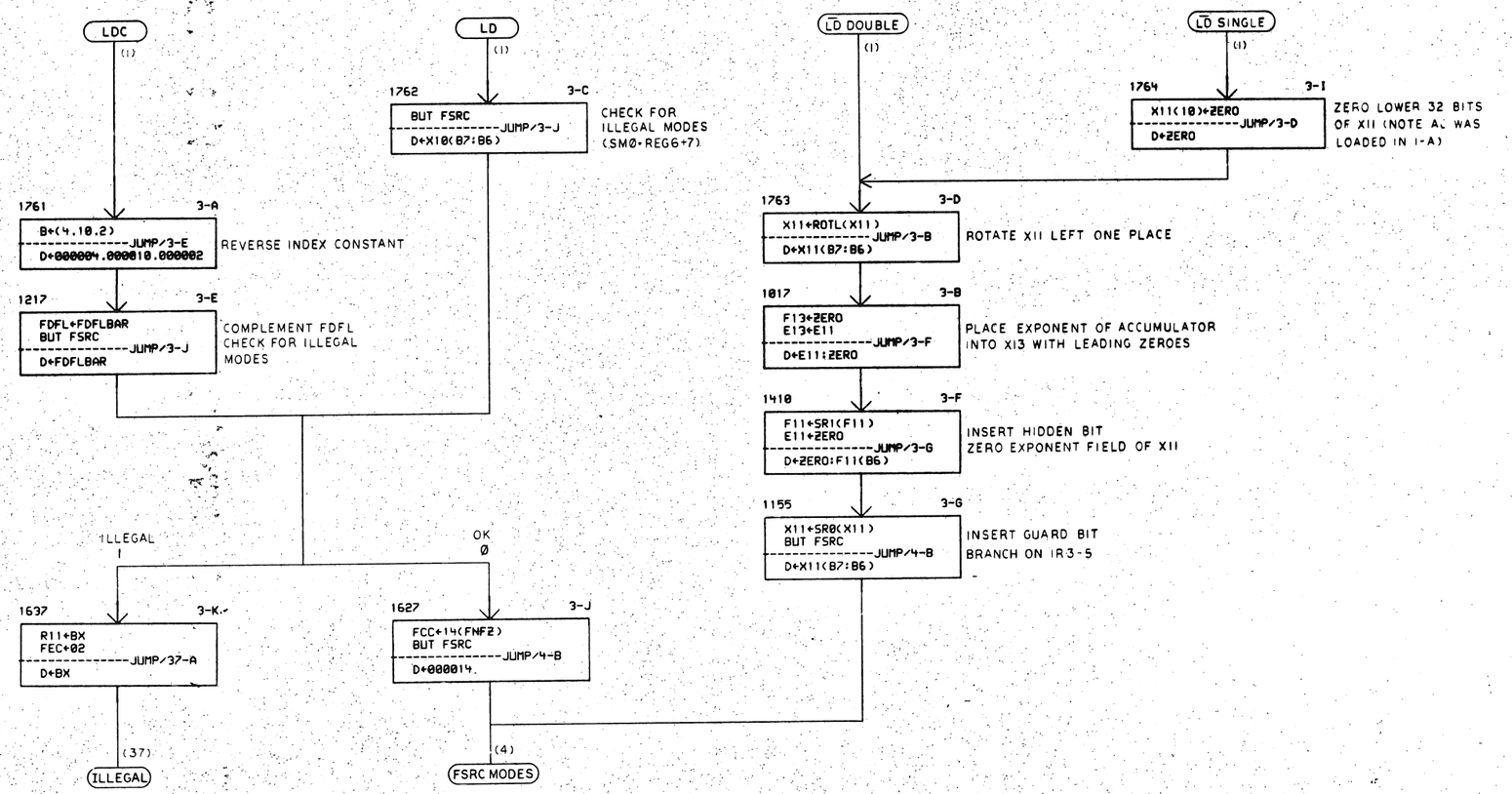

REVISIONS		
CHK	CHANGE NO.	REV.

TITLE	SIZE	CODE	NUMBER	REV.
FPII-A FLOWS (3)	D	FD	FPII-A-2	
SCALE	SHEET 6 OF 40	DIST.		

110

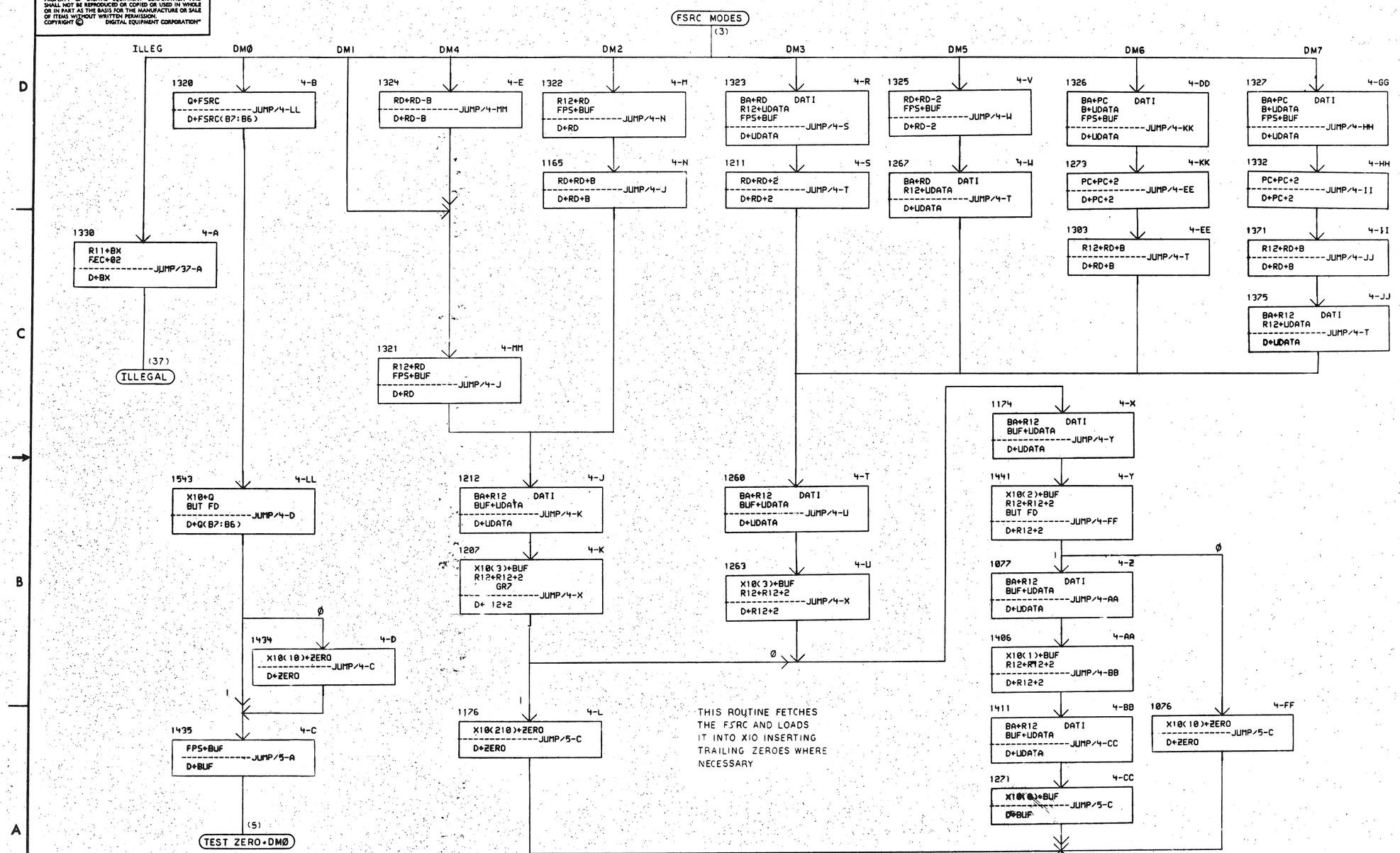

REVISIONS		
CHK	CHANGE NO.	REV.

TITLE	SIZE	CODE	NUMBER	REV.
FPII-A FLOWS (4)	D	FD	FPII-A-2	
SCALE	SHEET 7 OF 40	DIST.		

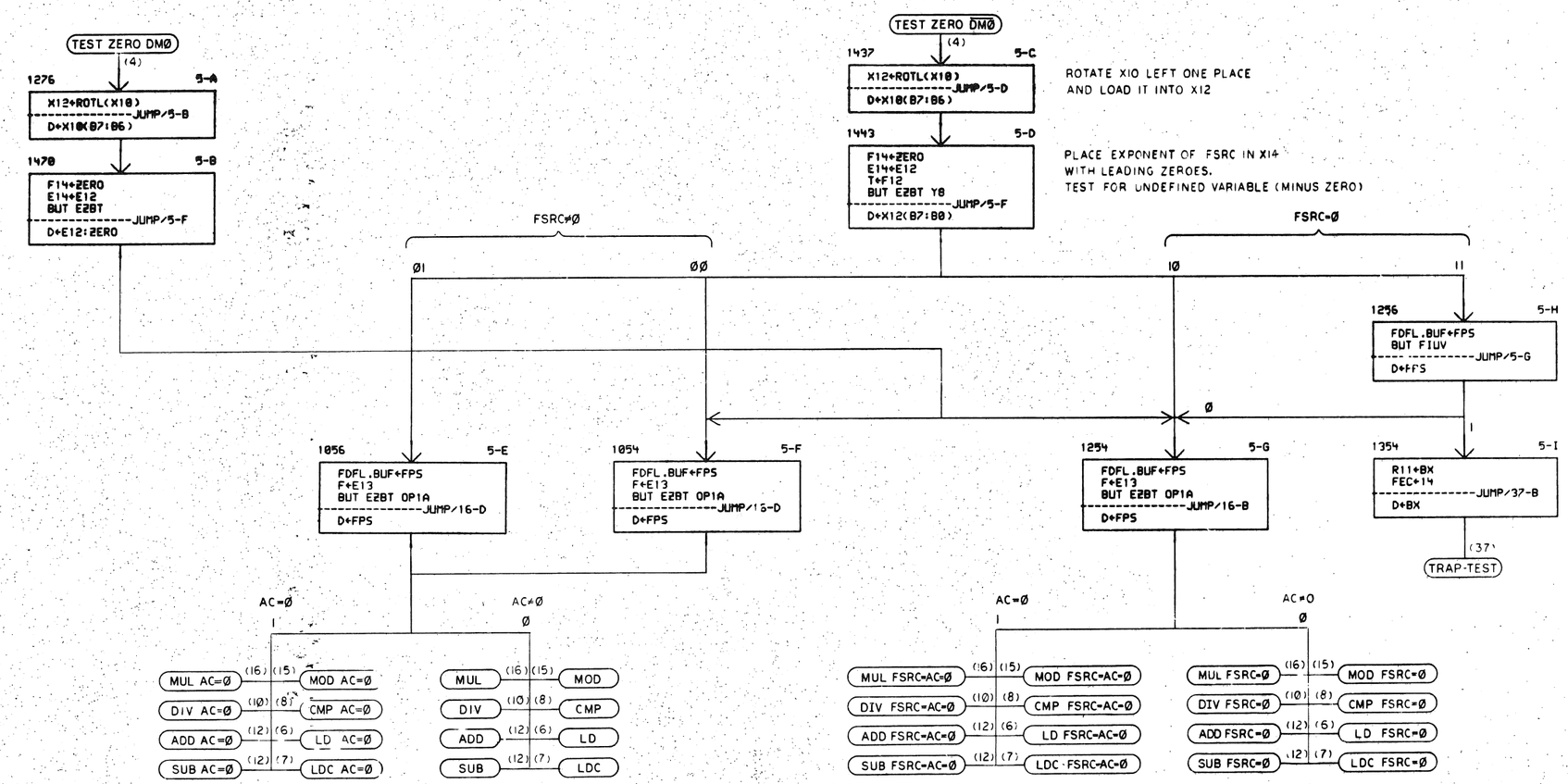

REVISIONS		
CHK	CHANGE NO.	REV.

TITLE	SIZE	CODE	NUMBER	REV.
FPII-A FLOWS (5)	D	FD	FPII-A-2	
SCALE	SHEET 2 OF 4	DIST.		

12

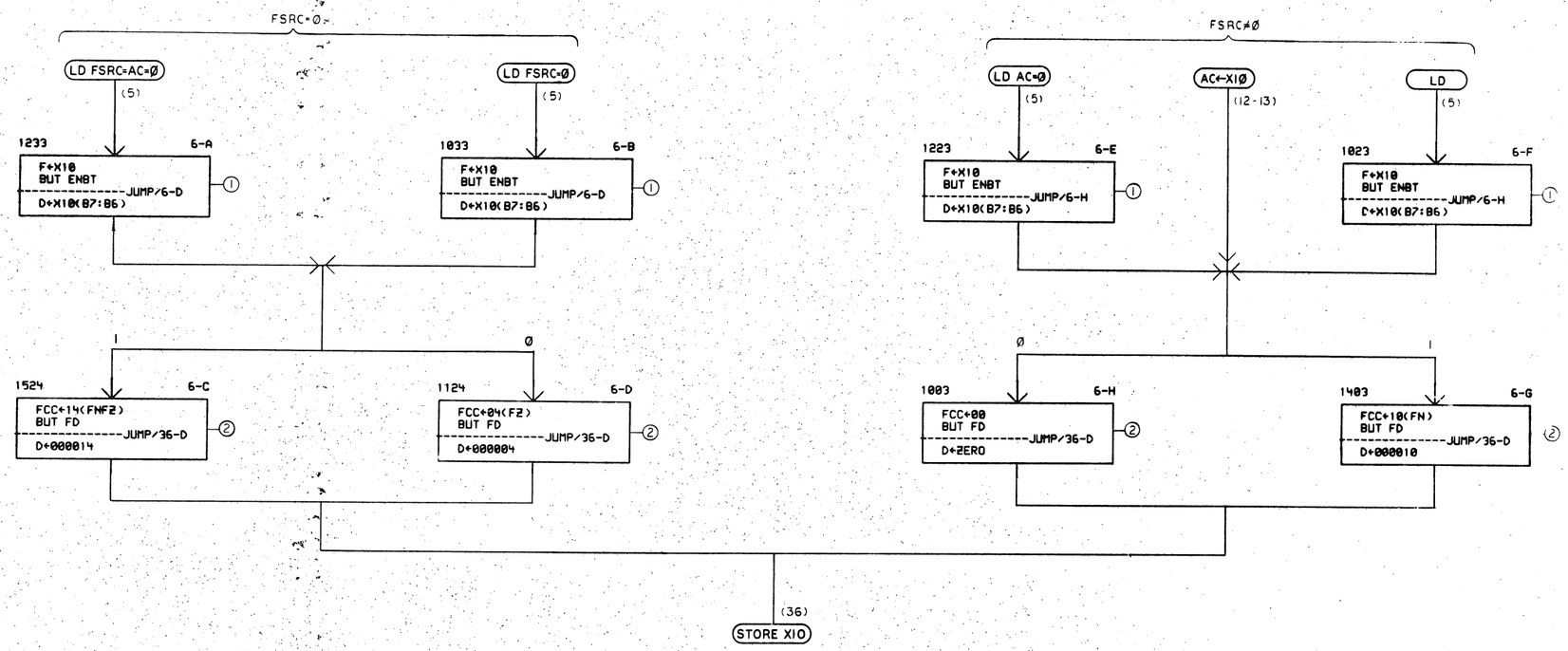

NOTES

1. TEST SIGN OF FSRC (XIØ:BIT 7)
2. SET FLOATING CONDITION CODES (FCC) USING THE APPROPRIATE CONSTANT. NOTE THAT THE FCC IS CONTAINED IN THE LOWER FOUR BITS OF THE BUFFER (BUF).

REVISIONS		
CHK	CHANGE NO.	REV.

TITLE	SIZE	CODE	NUMBER	REV.
FPII-A FLOWS (6)	D	FD	FPII A-2	
SCALE / SHEET 5 OF 40	DIST.			

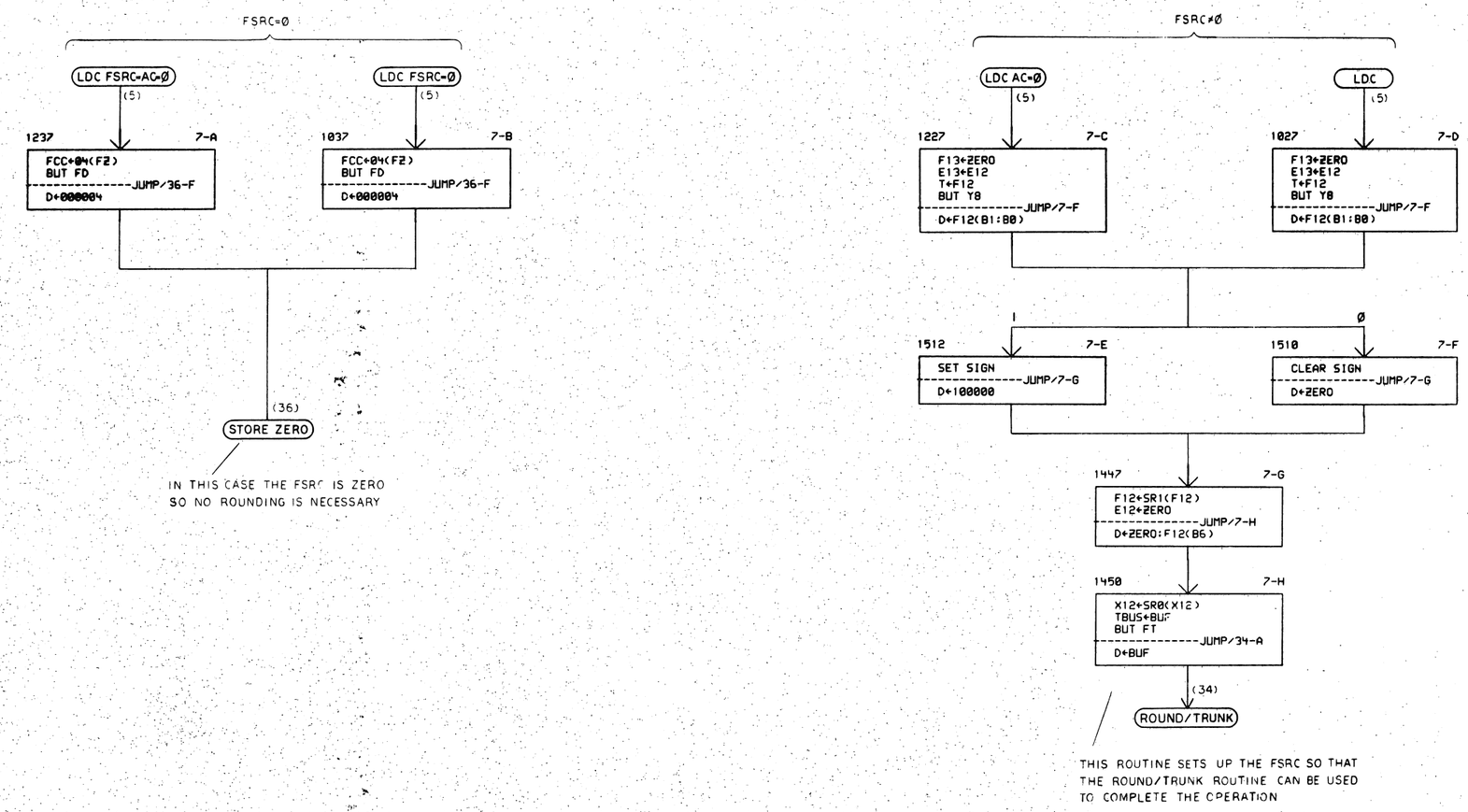

REVISIONS		
CHK	CHANGE NO.	REV.

TITLE	SIZE	CODE	NUMBER	REV.
FP11-A FLOWS (7)	D	FD	FP11-A-2	
SCALE	SHEET 10 OF 40	DIST.		

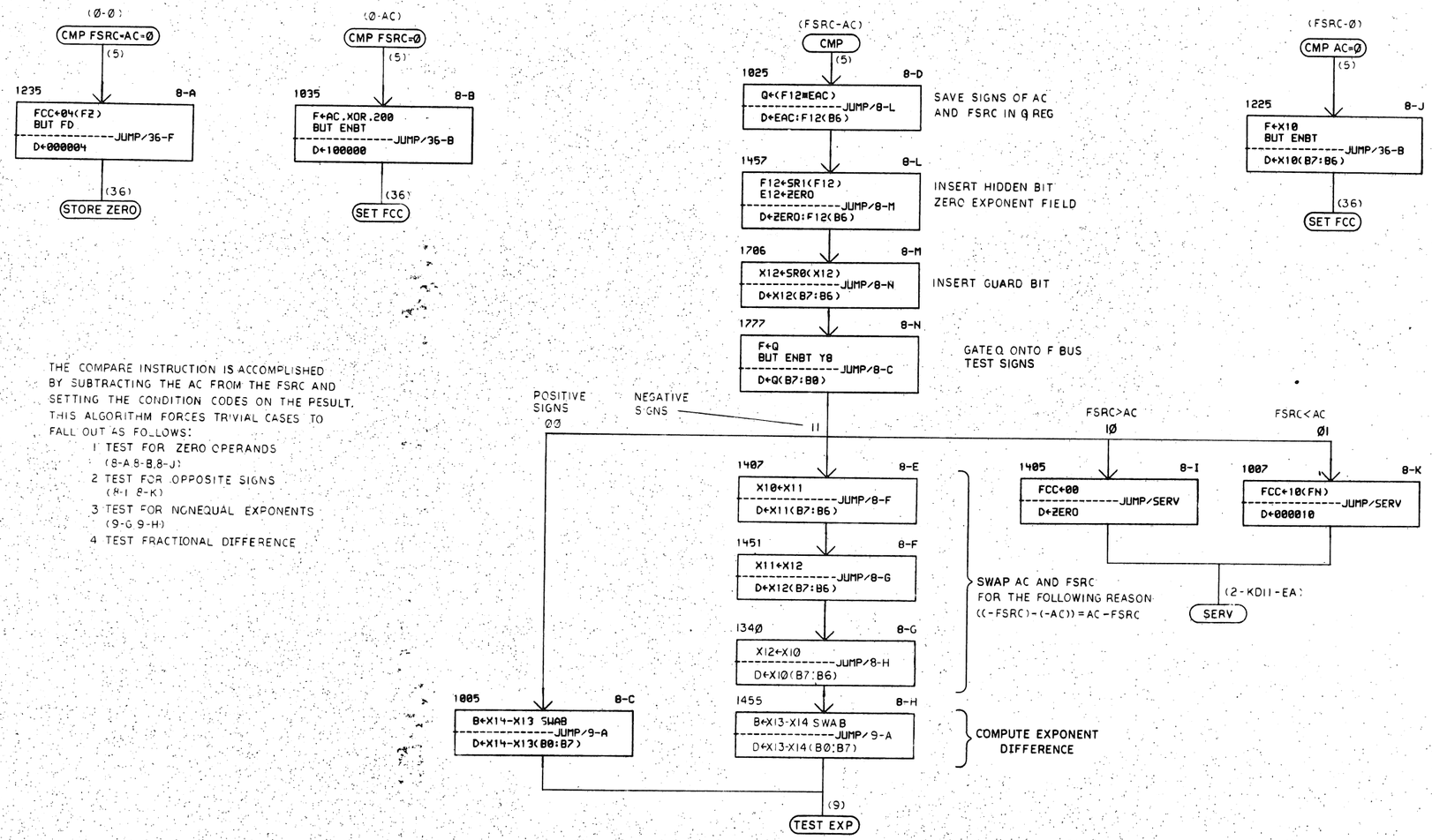

THE COMPARE INSTRUCTION IS ACCOMPLISHED BY SUBTRACTING THE AC FROM THE FSRC AND SETTING THE CONDITION CODES ON THE RESULT. THIS ALGORITHM FORCES TRIVIAL CASES TO FALL OUT AS FOLLOWS:

1 TEST FOR ZERO OPERANDS (8-A,8-B,8-J)
2 TEST FOR OPPOSITE SIGNS (8-I,8-K)
3 TEST FOR NONEQUAL EXPONENTS (9-G,9-H)
4 TEST FRACTIONAL DIFFERENCE

REVISIONS		
CHK	CHANGE NO.	REV.

TITLE: FPII-A FLOWS (8)
SIZE: D | CODE: FD | NUMBER: FPII-A- | REV.
SCALE | SHEET 11 OF 20 | DIST.

115

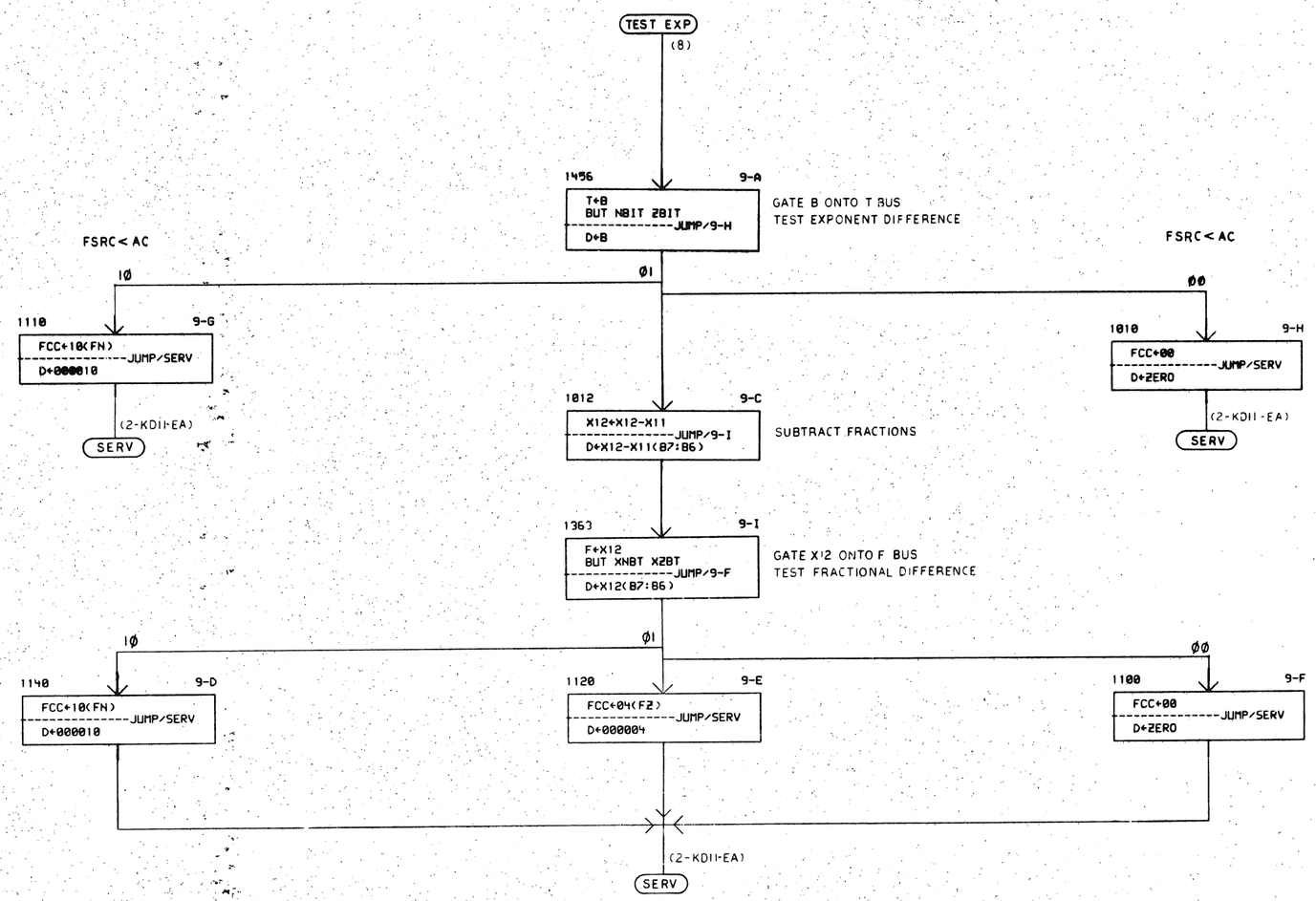

REVISIONS		
CHK	CHANGE NO.	REV.

TITLE	SIZE	CODE	NUMBER	REV.
FPII-A FLOWS (9)	D	FD	FPII-A-	
SCALE —	SHEET 2 OF 4	DIST.		

116

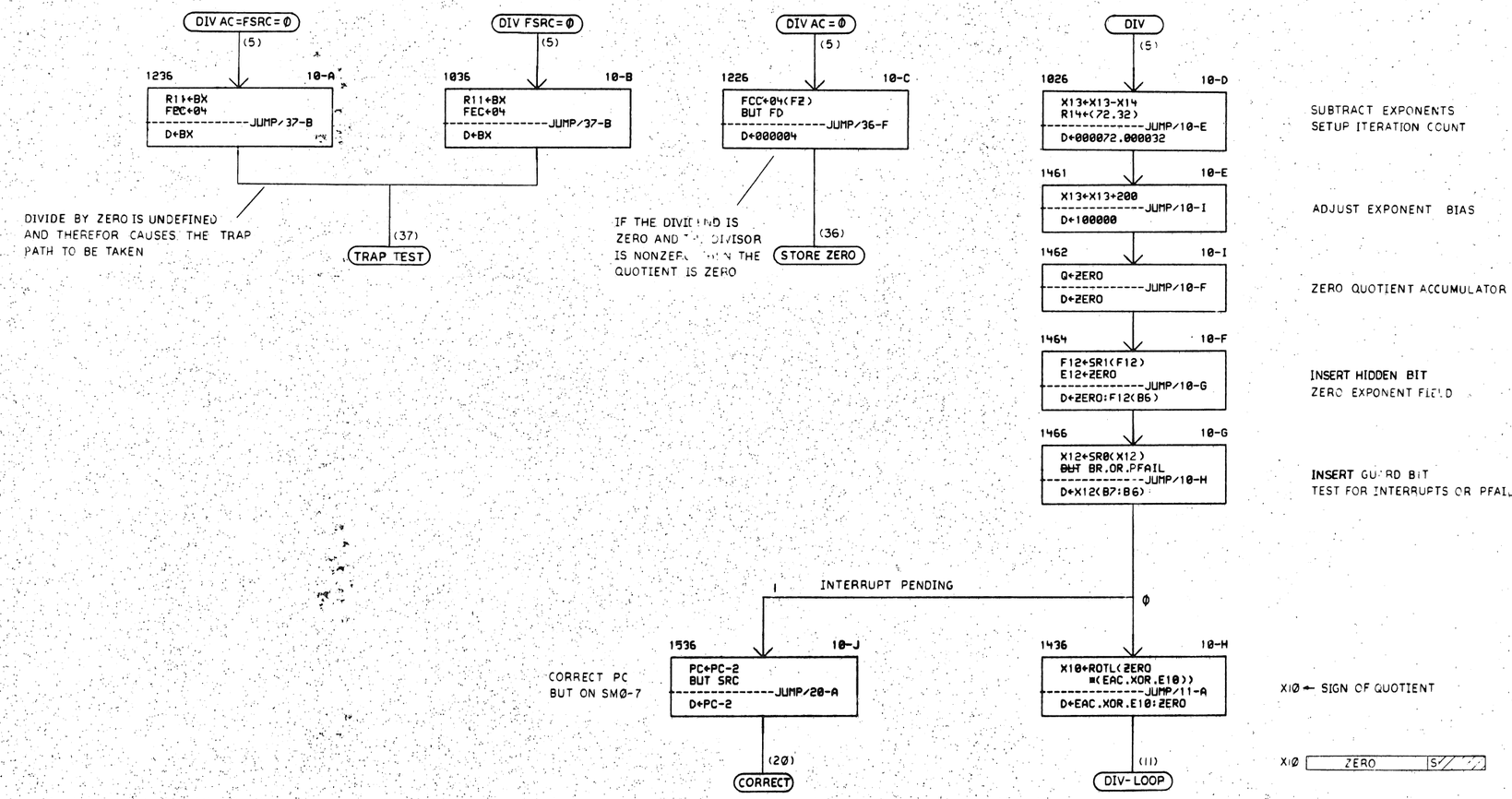

REVISIONS		
CHK	CHANGE NO.	REV.

TITLE	SIZE	CODE	NUMBER	REV.
FPII-A FLOWS (1Ø)	D	FD	FPII-A-	
SCALE — SHEET 13 OF 40	DIST.			

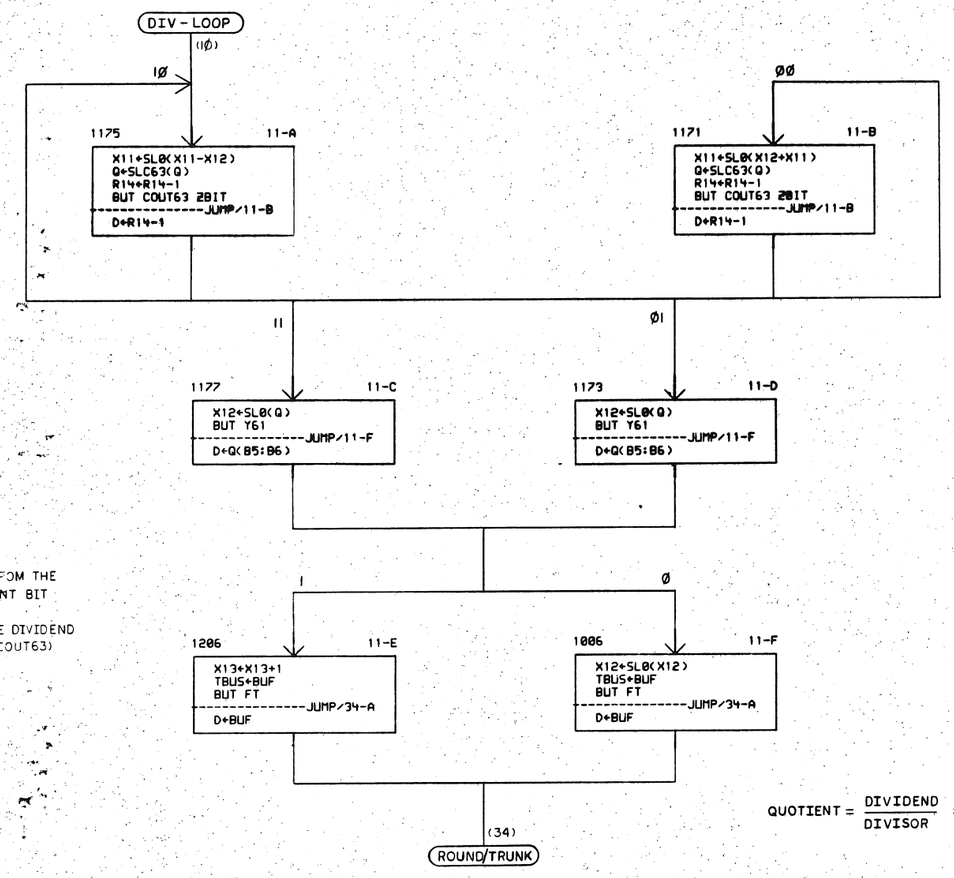

THIS IS A NONRESTORING
DIVISION ALGORITHM IN WHICH:

1. THE DIVISOR IS SUBTRACTED FFOM THE DIVIDEND IF THE LAST QUOTIENT BIT (COUT63) WAS ONE.
2. THE DIVISOR IS ADDED TO THE DIVIDEND IF THE LAST QUOTIENT BIT (COUT63) WAS ZERO.

$$\text{QUOTIENT} = \frac{\text{DIVIDEND}}{\text{DIVISOR}} = \frac{AC}{FSRC} = \frac{X11}{X12}$$

REVISIONS		
CHK	CHANGE NO.	REV

TITLE	SIZE	CODE	NUMBER	REV.
FP11-A FLOWS (11)	D	FD	FP11-A-	
SCALE	SHEET 14 OF 40	DIST.		

119

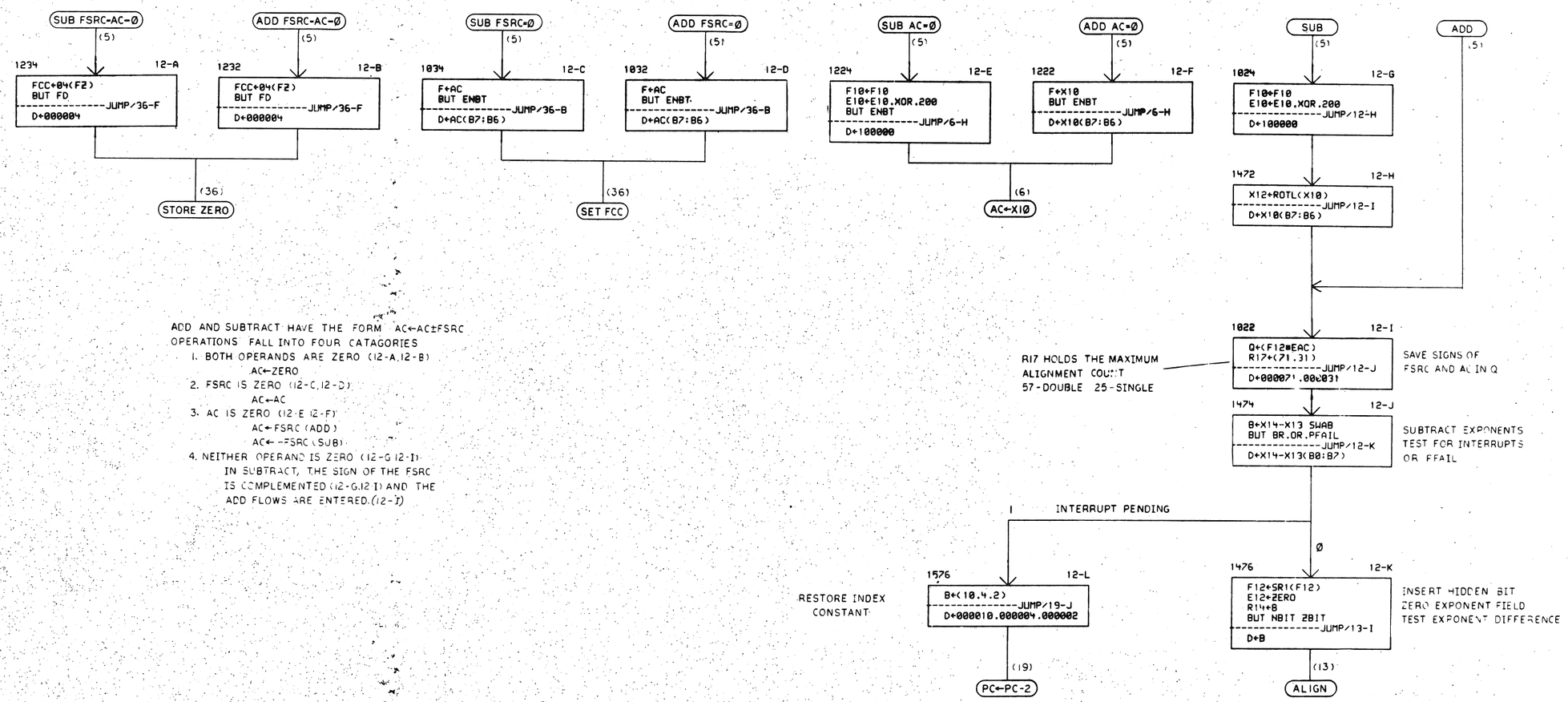

ADD AND SUBTRACT HAVE THE FORM AC←AC±FSRC
OPERATIONS FALL INTO FOUR CATAGORIES

1. BOTH OPERANDS ARE ZERO (12-A,12-B)
   AC←ZERO
2. FSRC IS ZERO (12-C,12-D)
   AC←AC
3. AC IS ZERO (12-E 12-F)
   AC←FSRC (ADD)
   AC←-FSRC (SUB)
4. NEITHER OPERAND IS ZERO (12-G 12-I)
   IN SUBTRACT, THE SIGN OF THE FSRC IS COMPLEMENTED (12-G,12 I) AND THE ADD FLOWS ARE ENTERED.(12-I)

REVISIONS		
CHK	CHANGE NO.	REV.

TITLE	SIZE	CODE	NUMBER	REV.
FPII-A FLOWS (12)	D	FD	FPII-A-2	
SCALE —	SHEET 12 OF 40	DIST.		

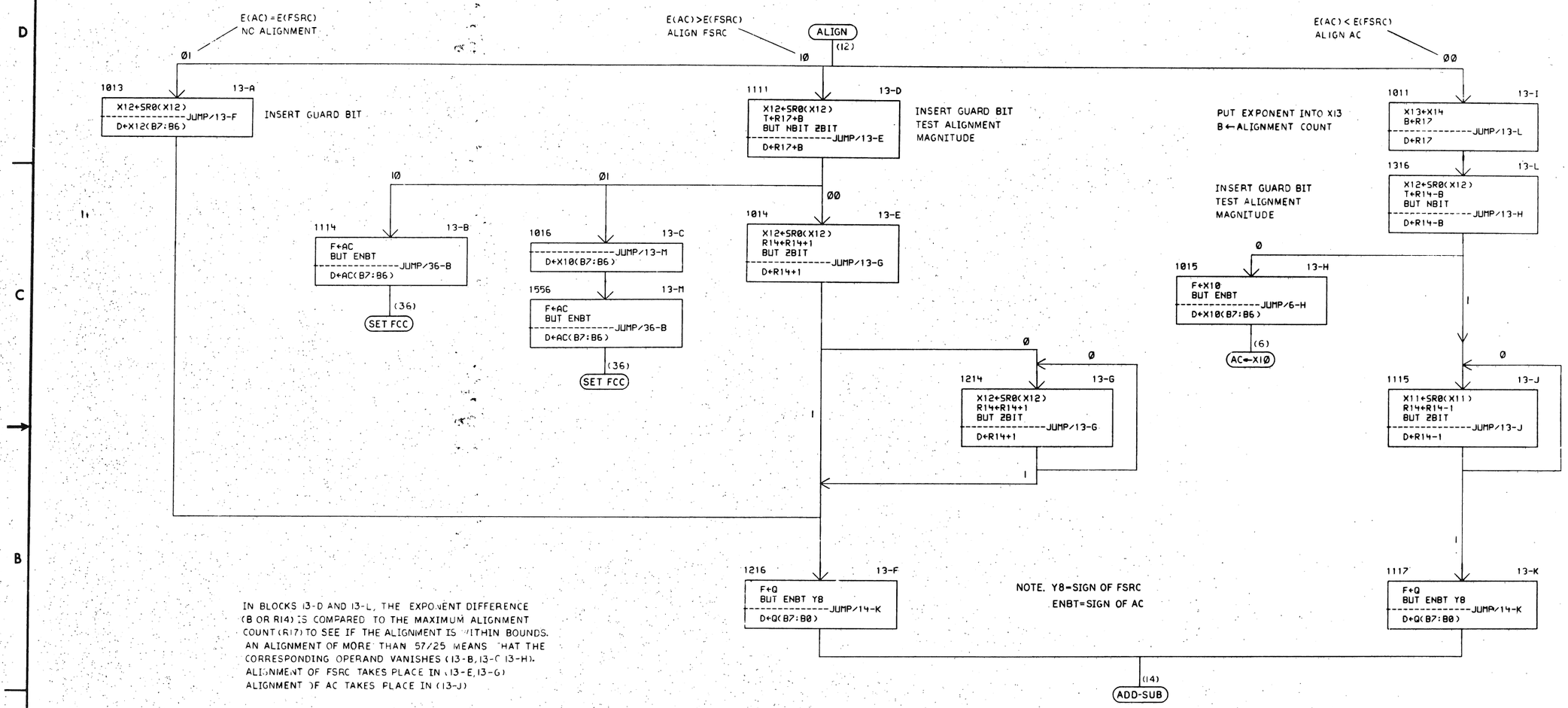

NOTE. Y8=SIGN OF FSRC
ENBT=SIGN OF AC

IN BLOCKS 13-D AND 13-L, THE EXPONENT DIFFERENCE (B OR R14) IS COMPARED TO THE MAXIMUM ALIGNMENT COUNT (R17) TO SEE IF THE ALIGNMENT IS WITHIN BOUNDS. AN ALIGNMENT OF MORE THAN 57/25 MEANS THAT THE CORRESPONDING OPERAND VANISHES (13-B, 13-C 13-H). ALIGNMENT OF FSRC TAKES PLACE IN (13-E, 13-G) ALIGNMENT OF AC TAKES PLACE IN (13-J)

REVISIONS		
CHK	CHANGE NO.	REV.

TITLE	SIZE	CODE	NUMBER	REV.
FPII-A FLOWS (13)	D	FD	FPII-A-2	
SCALE —	SHEET 16 OF 40	DIST.		

120

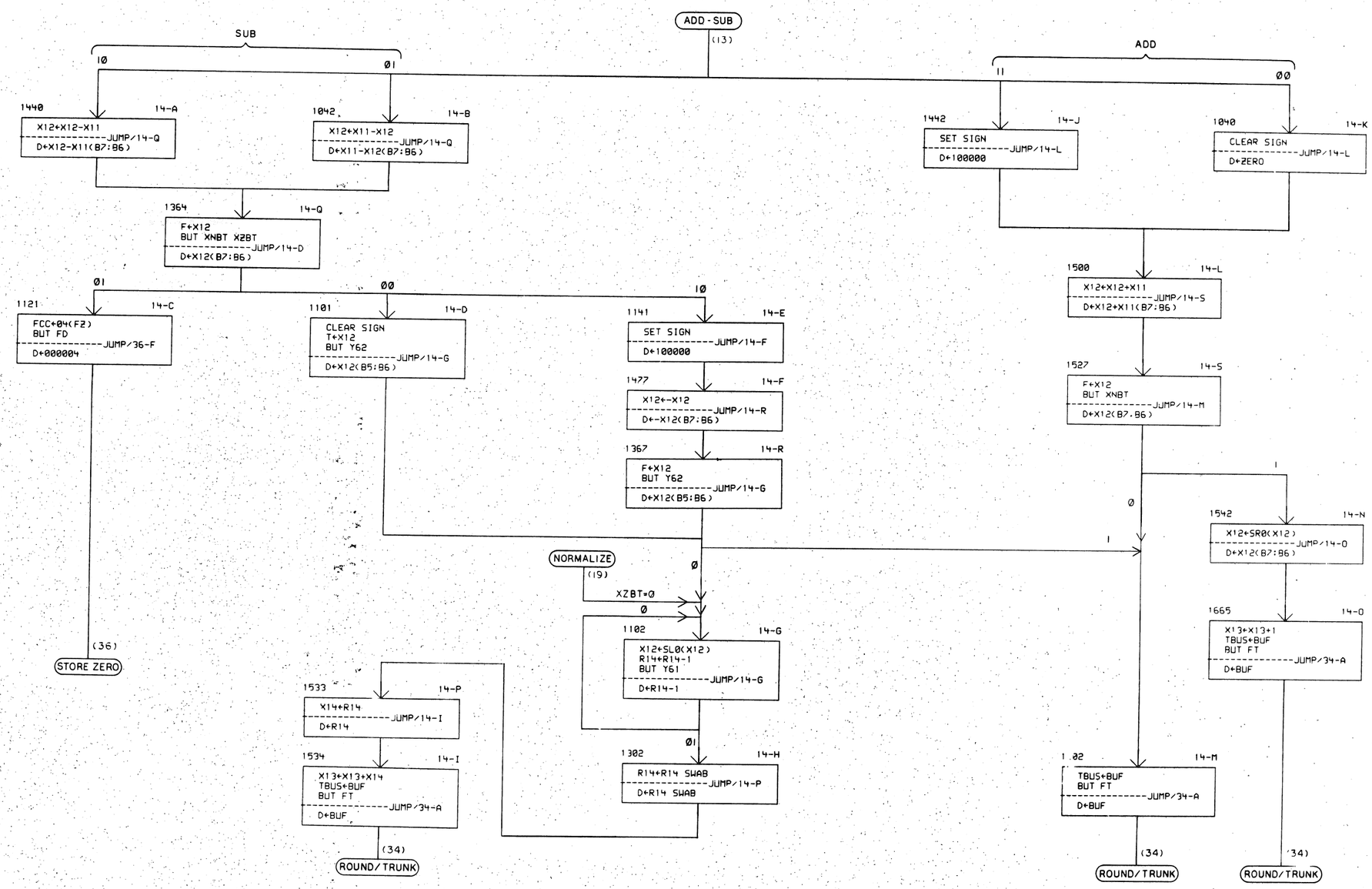

REVISIONS		
CHK	CHANGE NO.	REV.

TITLE	SIZE	CODE	NUMBER	REV.
FPII-A FLOWS (14)	D	FD	FPII-A-2	
SCALE	SHEET 17 OF 40	DIST.		

121

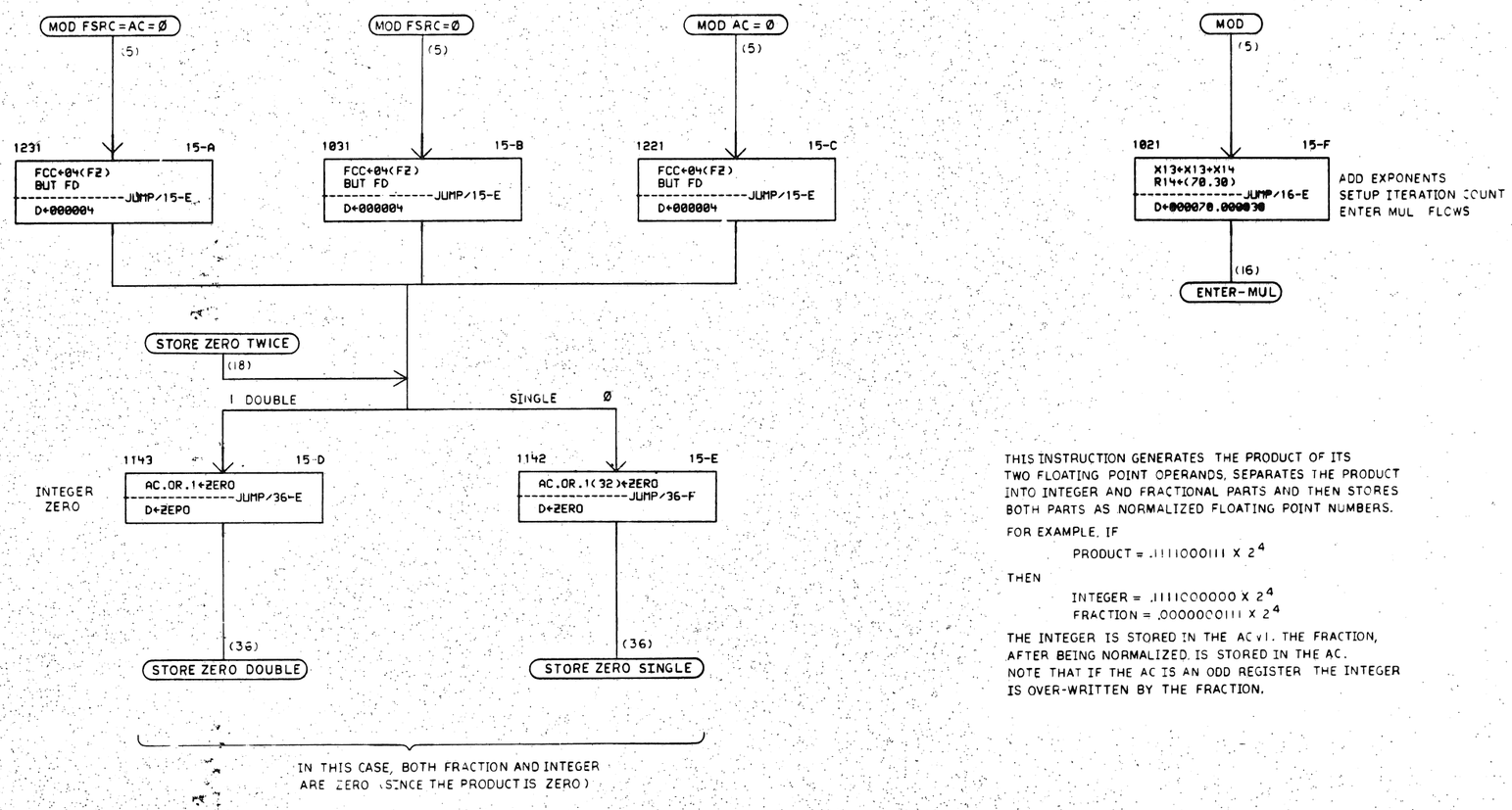

THIS INSTRUCTION GENERATES THE PRODUCT OF ITS TWO FLOATING POINT OPERANDS, SEPARATES THE PRODUCT INTO INTEGER AND FRACTIONAL PARTS AND THEN STORES BOTH PARTS AS NORMALIZED FLOATING POINT NUMBERS.

FOR EXAMPLE, IF

PRODUCT = $.1111000111 \times 2^4$

THEN

INTEGER = $.1111000000 \times 2^4$

FRACTION = $.0000000111 \times 2^4$

THE INTEGER IS STORED IN THE AC(1). THE FRACTION, AFTER BEING NORMALIZED, IS STORED IN THE AC. NOTE THAT IF THE AC IS AN ODD REGISTER THE INTEGER IS OVER-WRITTEN BY THE FRACTION.

REVISIONS		
CHK	CHANGE NO.	REV.

TITLE	SIZE	CODE	NUMBER	REV.
FPII-A FLOWS (15)	D	FD	FPII-A-2	
SCALE — SHEET 18 OF 40	DIST.			

122

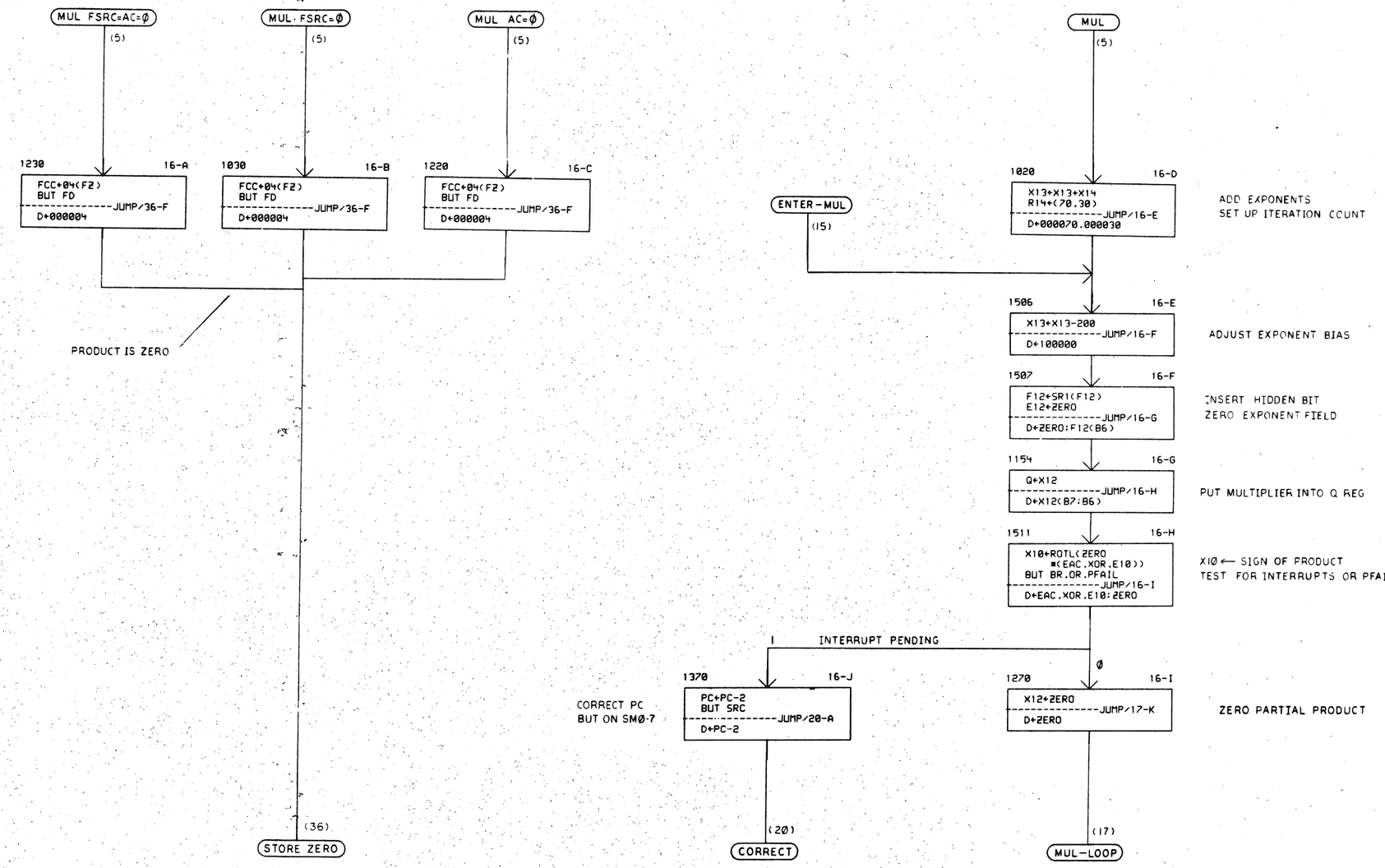

REVISIONS		
CHK	CHANGE NO.	REV.

TITLE	SIZE	CODE	NUMBER	REV.
FPII-A FLOWS (16)	D	FD	FPII-A-2	
SCALE —	SHEET 15 OF 40	DIST.		

123

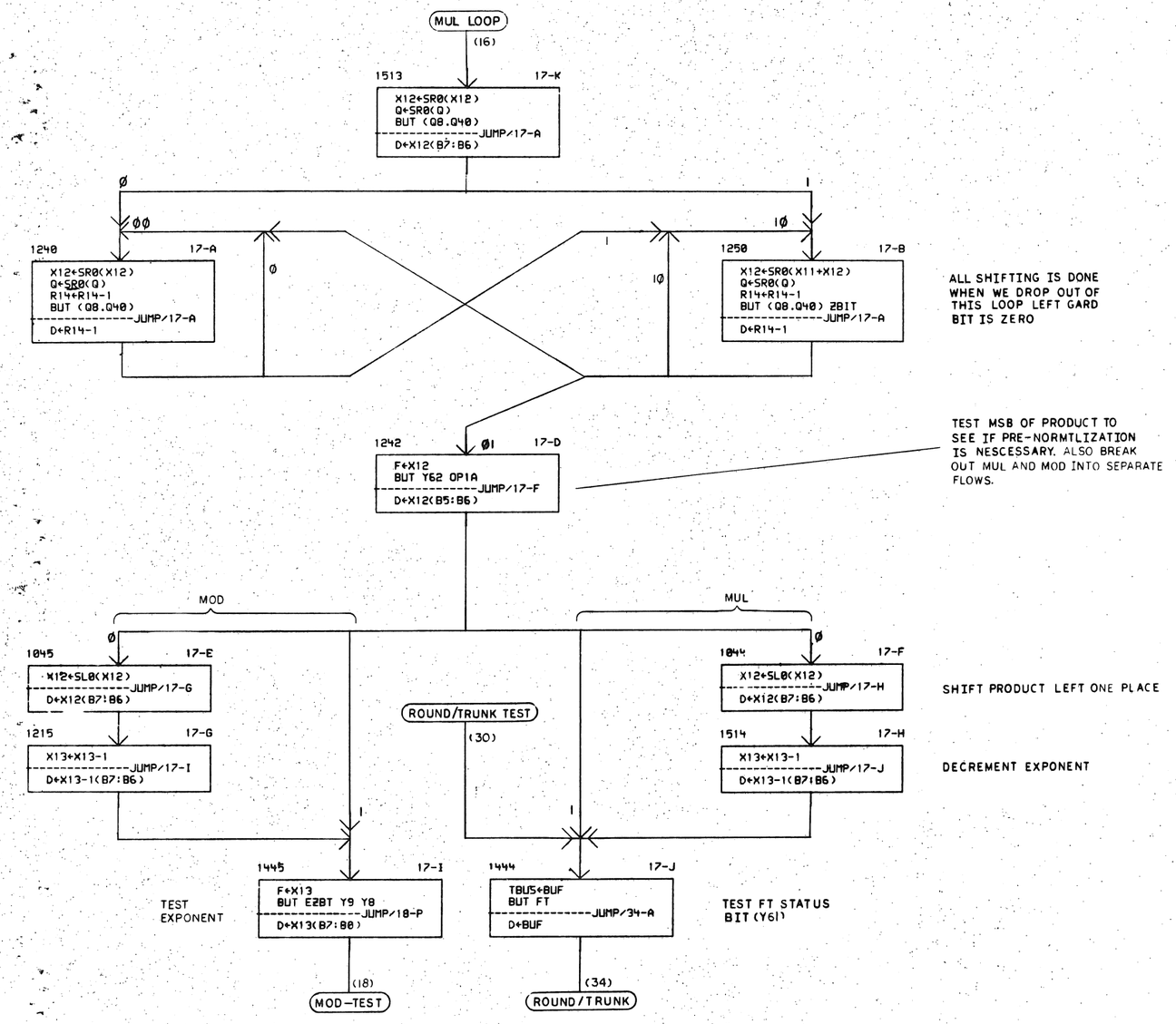

REVISIONS		
CHK	CHANGE NO.	REV.

TITLE	SIZE	CODE	NUMBER	REV.
FPII-A FLOWS (17)	D	FD	FPII-A-2	
SCALE	SHEET 20 OF 40		DIST.	

124

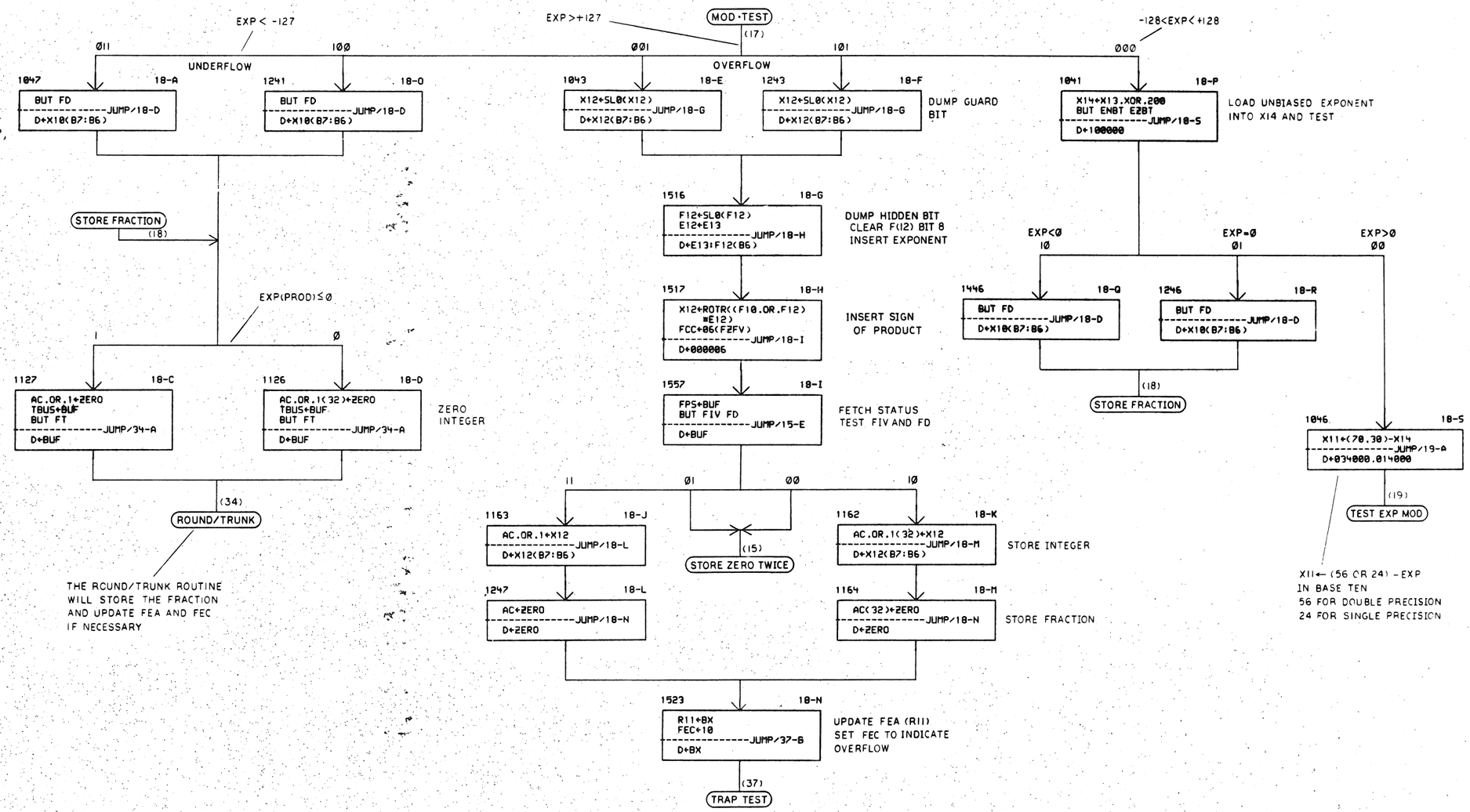

REVISIONS		
CHK	CHANGE NO.	REV.

TITLE: FP11-A FLOWS (18)
SIZE: D | CODE: FD | NUMBER: FP11-A-2 | REV.
SCALE | SHEET 21 OF 40 | DIST.

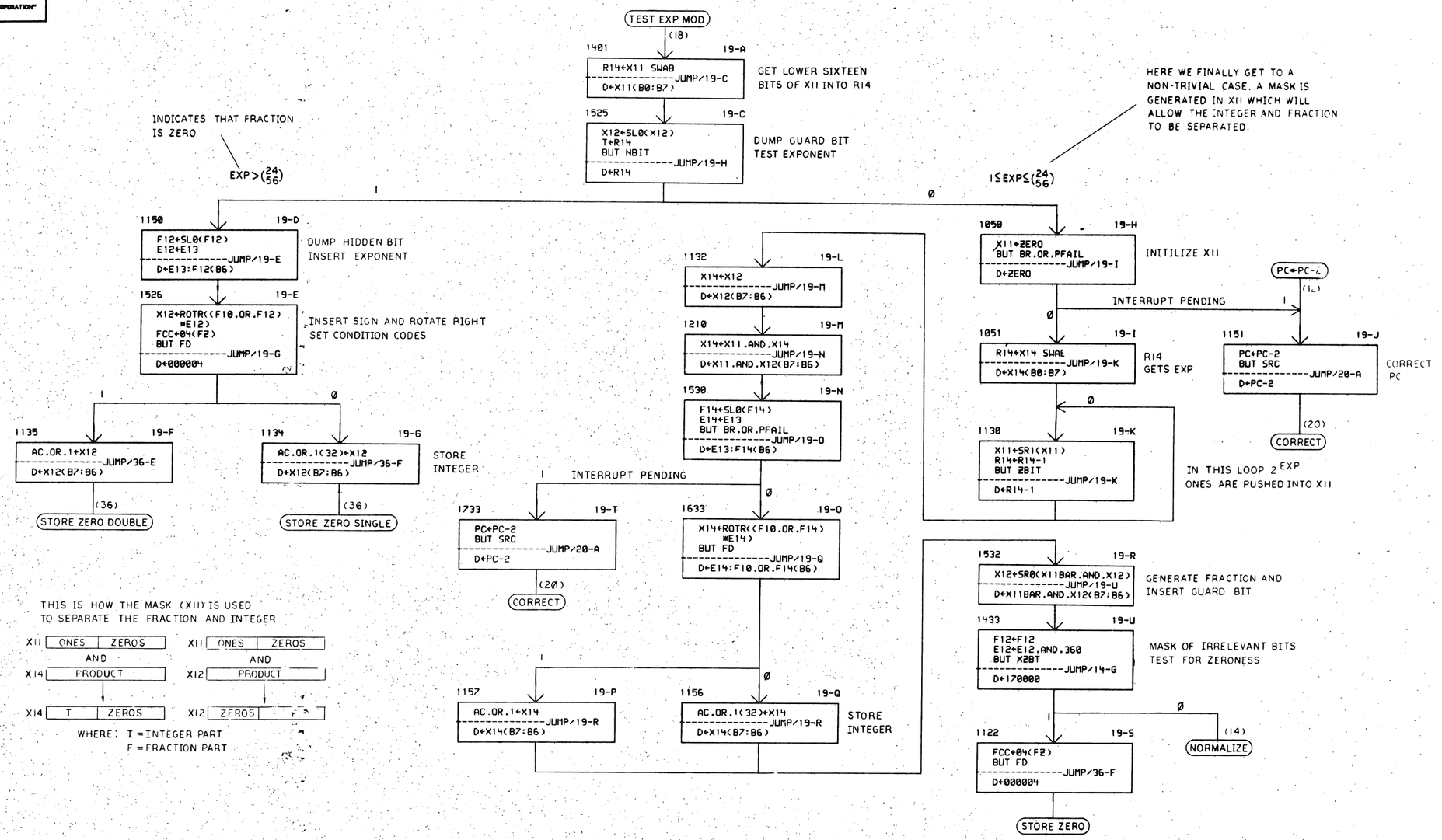

REVISIONS		
CHK	CHANGE NO.	REV.

TITLE: FPII-A FLOWS (19)
SIZE: D CODE: FD NUMBER: FPII-A-2 REV.
SCALE: SHEET 22 OF 40 DIST.

126

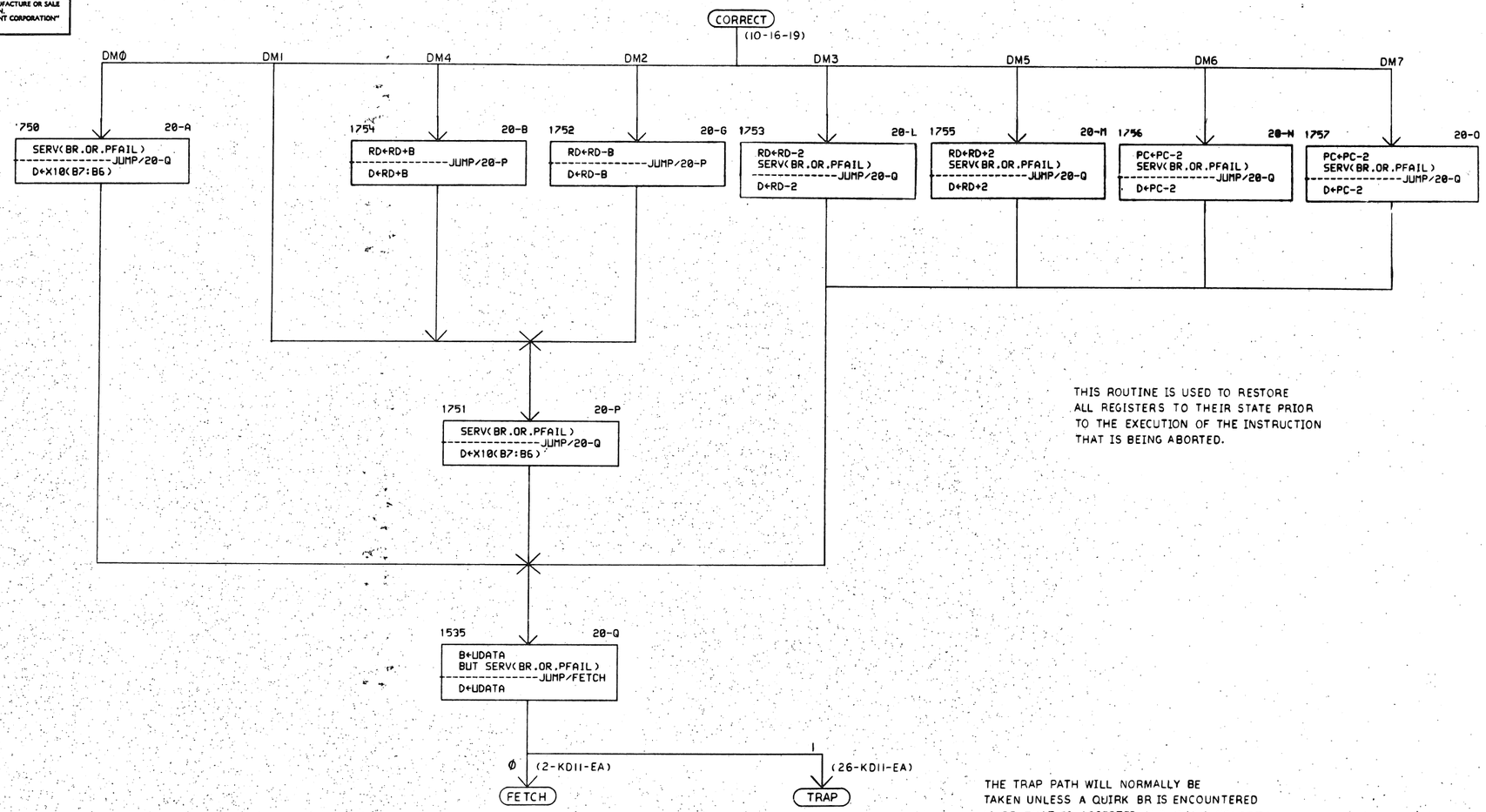

THIS ROUTINE IS USED TO RESTORE ALL REGISTERS TO THEIR STATE PRIOR TO THE EXECUTION OF THE INSTRUCTION THAT IS BEING ABORTED.

THE TRAP PATH WILL NORMALLY BE TAKEN UNLESS A QUIRK BR IS ENCOUNTERED (A BR THAT IS ASSERTED AND THAN NEGATED BEFORE THE PROCESSOR ISSUES A BG)

REVISIONS		
CHK	CHANGE NO.	REV.

TITLE	SIZE	CODE	NUMBER	REV.
FPII A FLOWS (20)	D	FD	FPII-A-2	
SCALE —	SHEET 23 OF 40	DIST.		

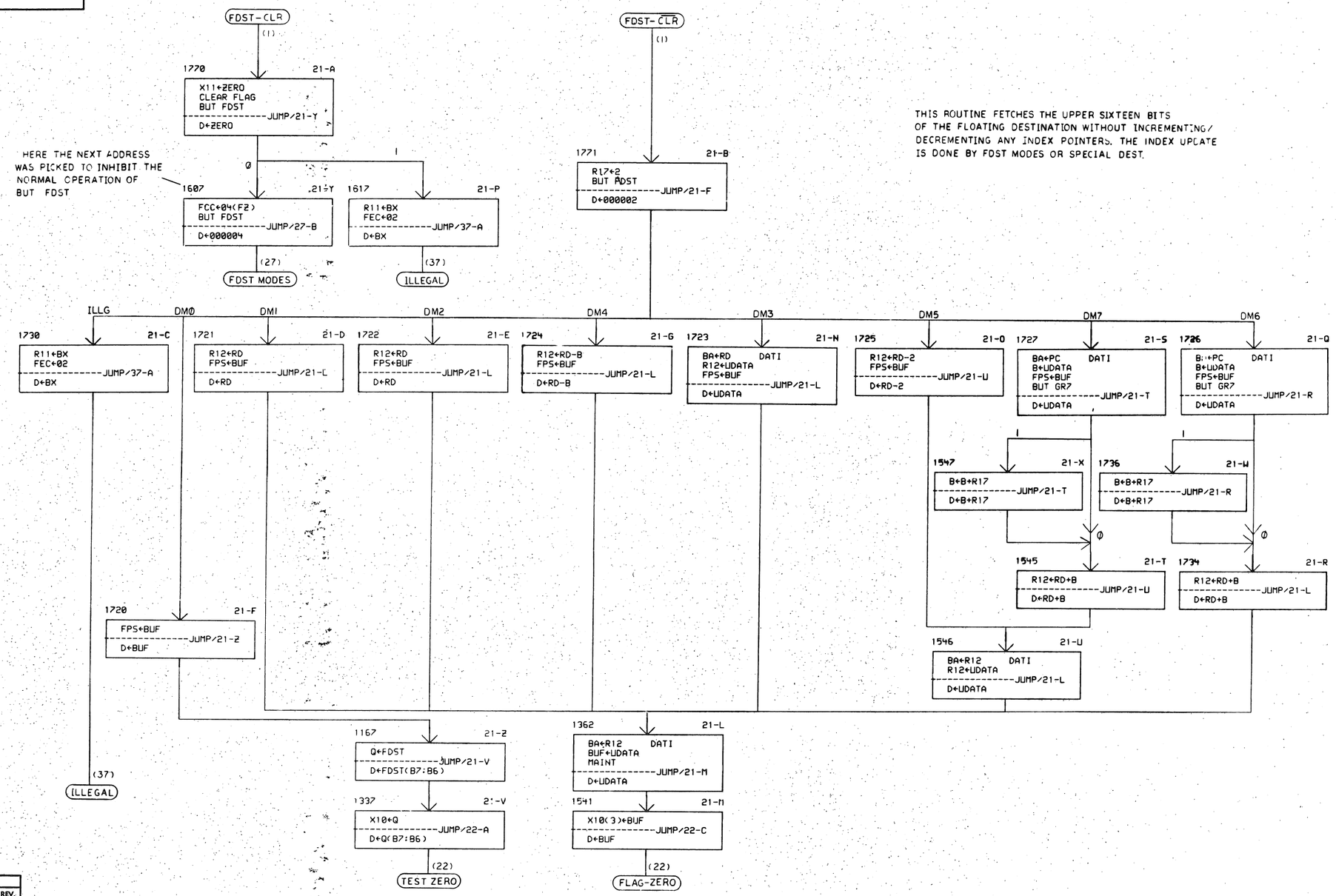

REVISIONS		
CHK	CHANGE NO.	REV.

TITLE	SIZE	CODE	NUMBER	REV.
FPII-A FLOWS (21)	D	FD	FPII-A-2	
SCALE	SHEET 24 OF 40	DIST.		

DEC FORM NO. ORD 139

128

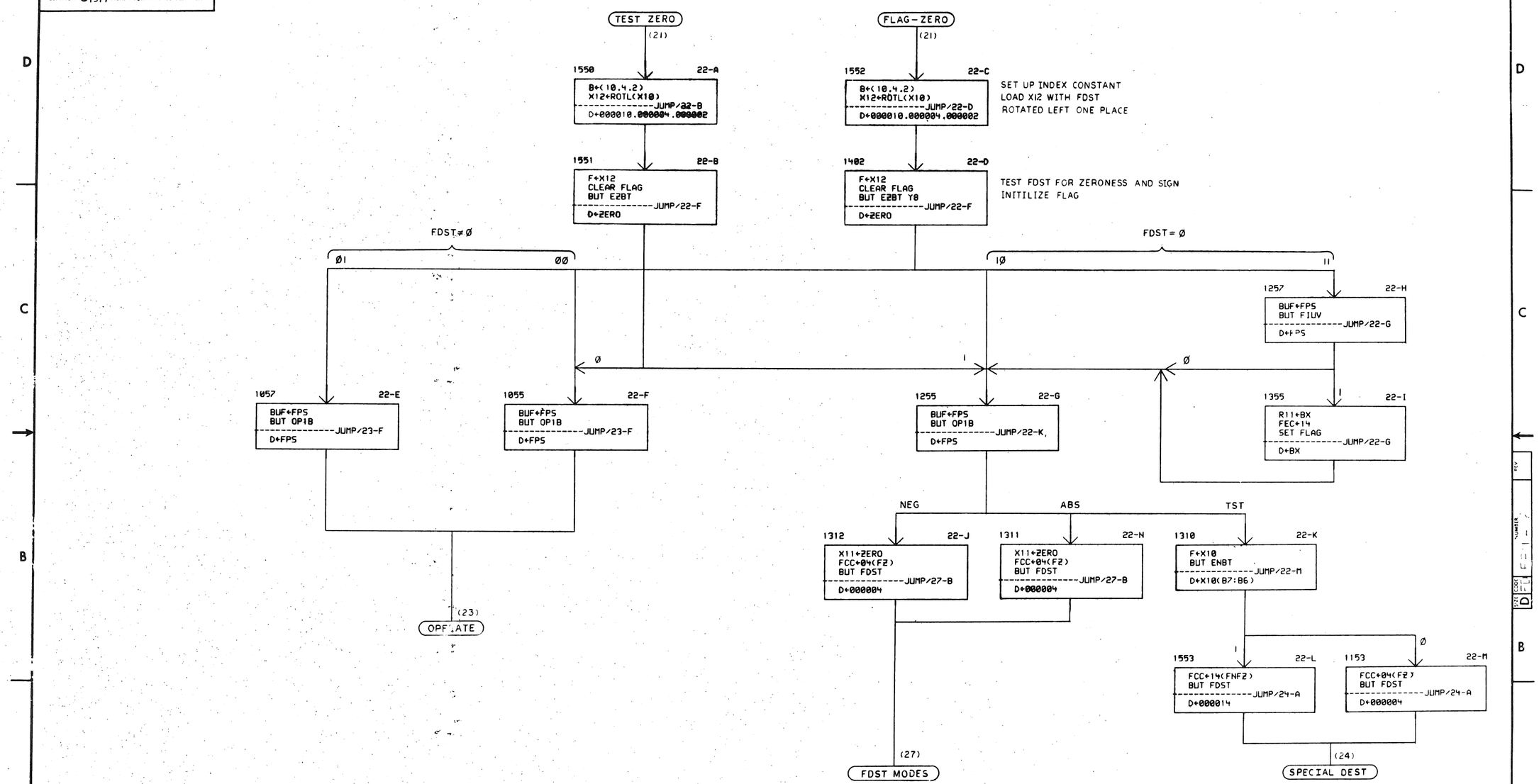

REVISIONS		
CHK	CHANGE NO.	REV.

TITLE	SIZE	CODE	NUMBER	REV.
FPII A FLOWS (22)	D	FD	FPII-A-2	
SCALE —	SHEET 25 OF 40	DIST.		

129

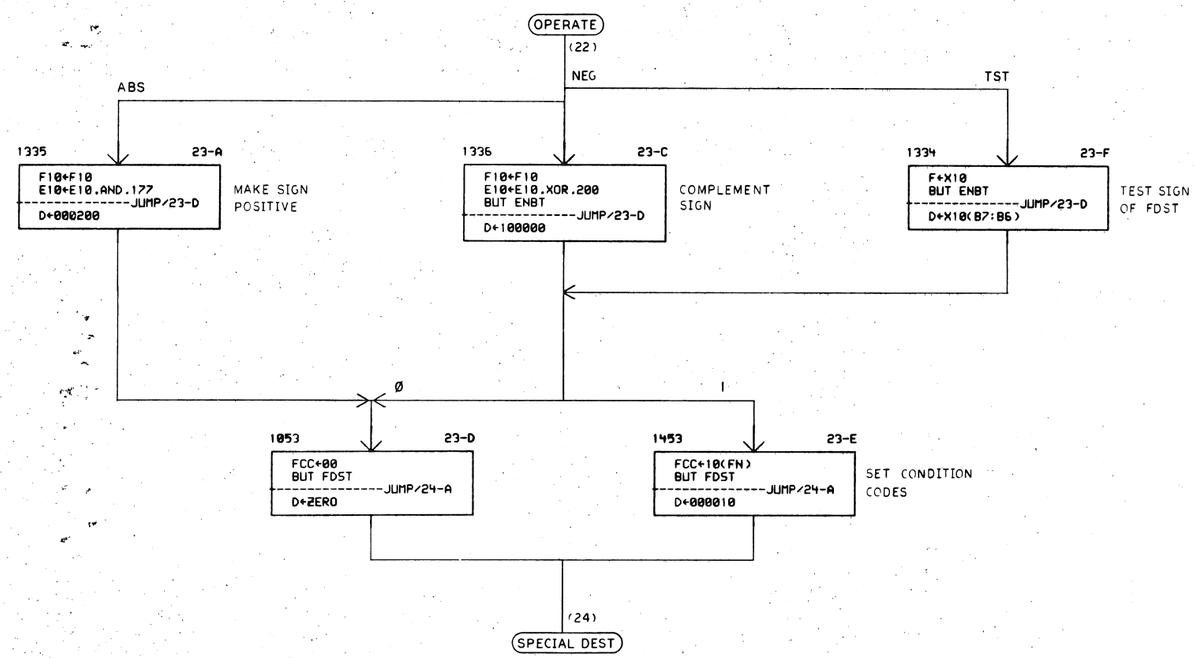

REVISIONS		
CHK	CHANGE NO.	REV.

TITLE	SIZE	CODE	NUMBER	REV.
FP11-A FLOWS (23)	D	FD	FP11-A-2	
SCALE —	SHEET 26 OF 40	DIST.		

130

THIS ROUTINE UPDATES THE INDEX REGISTERS AND THEN LOADS THE UPPER SIXTEEN BITS OF THE FDST INTO MEMORY OR AN ACCUMULATOR AS THE CASE MAY BE. NOTE THAT THE TEST INSTRUCTION AVOIDS DOING A MEMORY CYCLE SINCE IT IS UNNECESSARY AND UNLAWFUL

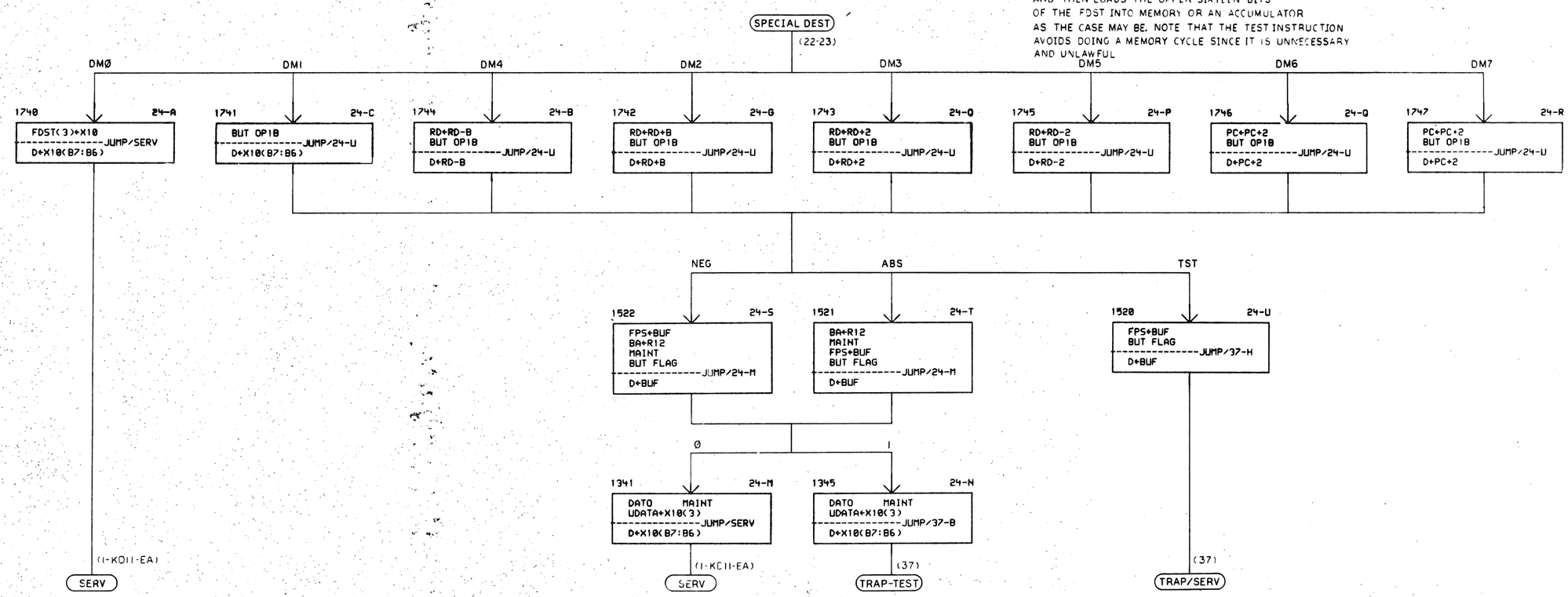

REVISIONS		
CHK	CHANGE NO.	REV.

TITLE	SIZE	CODE	NUMBER	REV.
FPII-A FLOWS (24)	D	FD	FPII-A-2	
SCALE	SHEET 27 OF 40	DIST.		

131

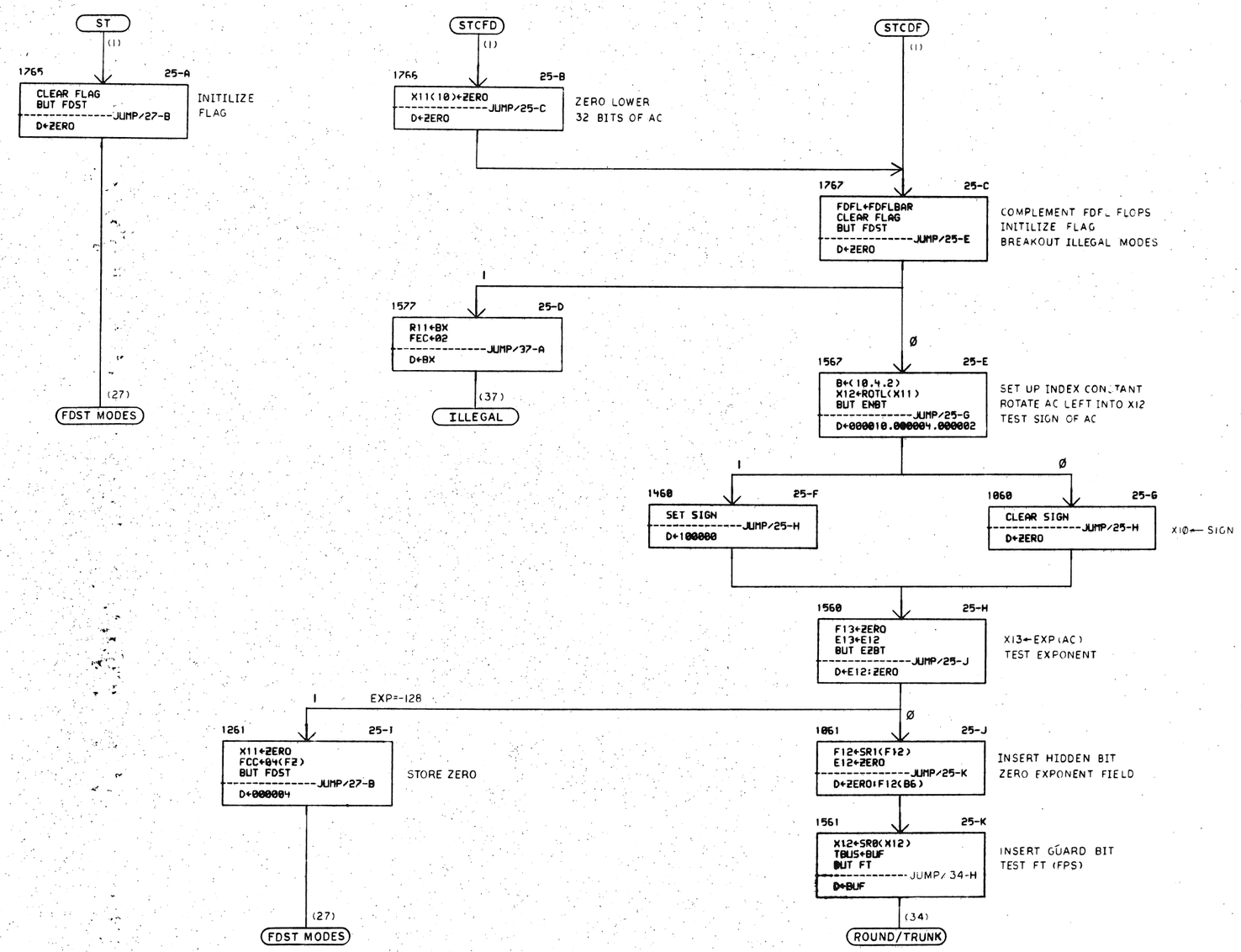

REVISIONS		
CHK	CHANGE NO.	REV.

TITLE	SIZE	CODE	NUMBER	REV.
FPII-A FLOWS (25)	D	FD	FPII-A-2	
SCALE	SHEET 28 OF 40		DIST.	

132

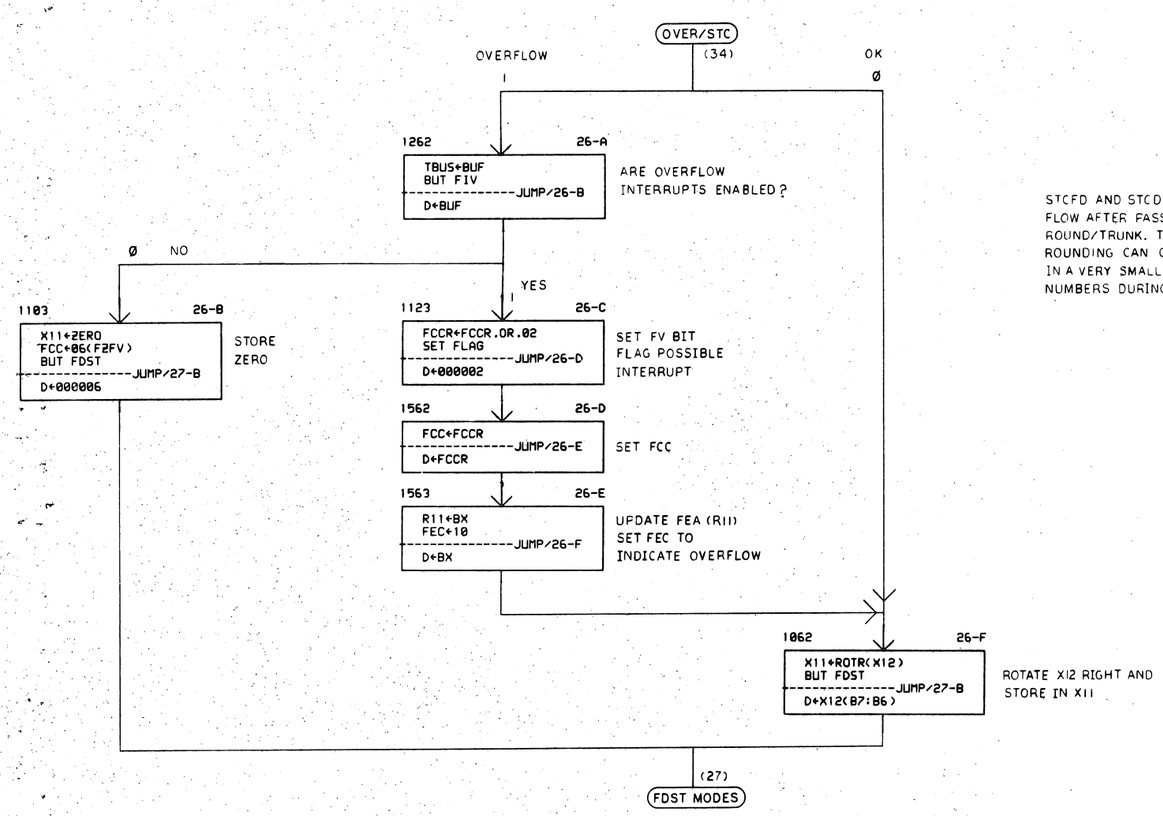

STCFD AND STCDF ENTER THIS FLOW AFTER PASSING THROUGH ROUND/TRUNK. THE PROCESS OF ROUNDING CAN CAUSE AN OVERFLOW IN A VERY SMALL CLASS OF VERY LARGE NUMBERS DURING STCDF (PROBABILITY = $\frac{1}{\infty}$)

REVISIONS		
CHK	CHANGE NO.	REV.

TITLE	SIZE	CODE	NUMBER	REV.
FPII-A FLOWS (26)	D	FD	FPII-A 2	
SCALE —	SHEET 29 OF 40	DIST.		

133

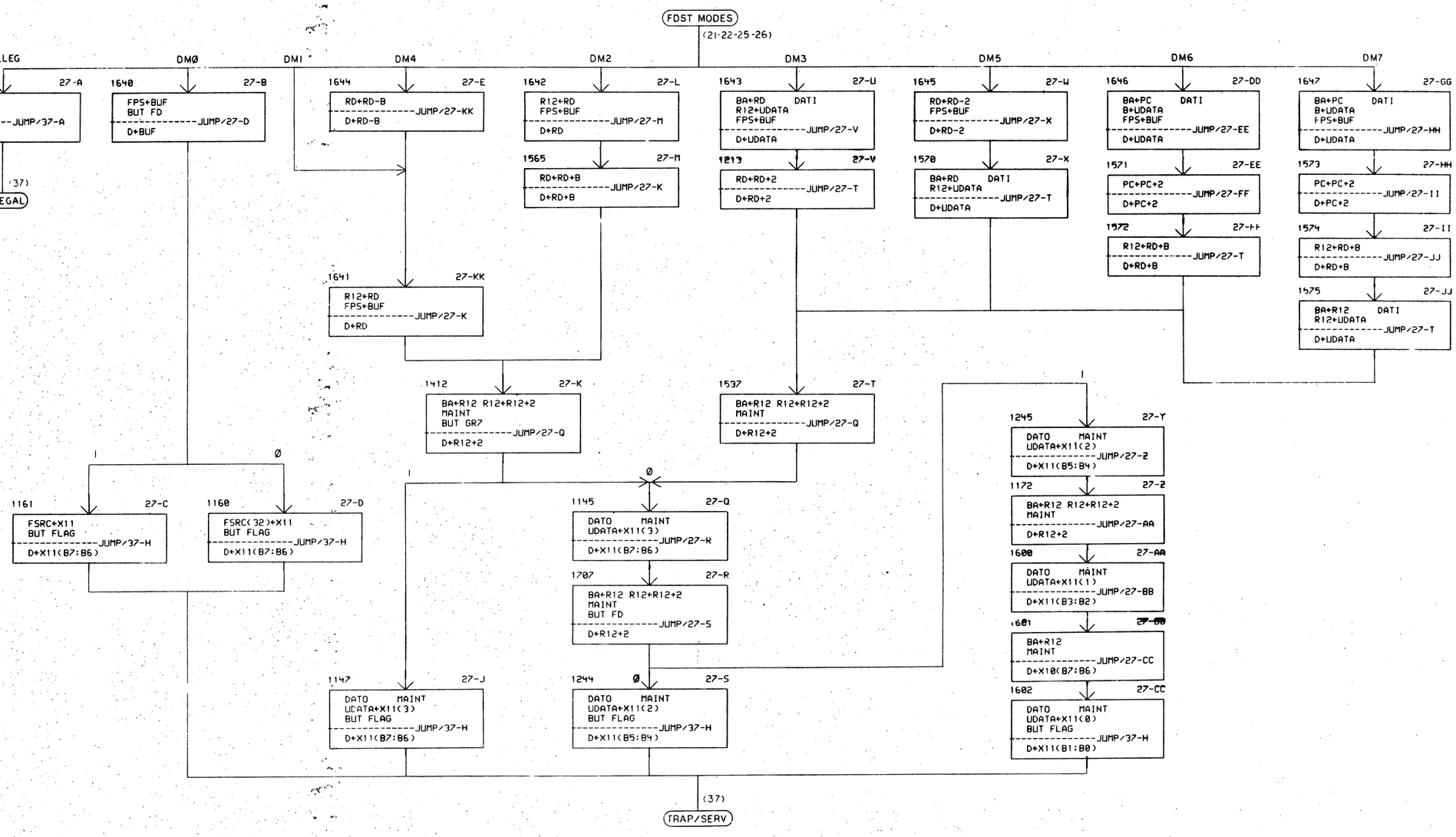

REVISIONS		
CHK	CHANGE NO.	REV.

TITLE	SIZE	CODE	NUMBER	REV.
FPII-A FLOWS (27)	D	FD	FPII-A-2	
SCALE —	SHEET 30 OF 4	DIST.		

DEC FORM NO. DRD 138

134

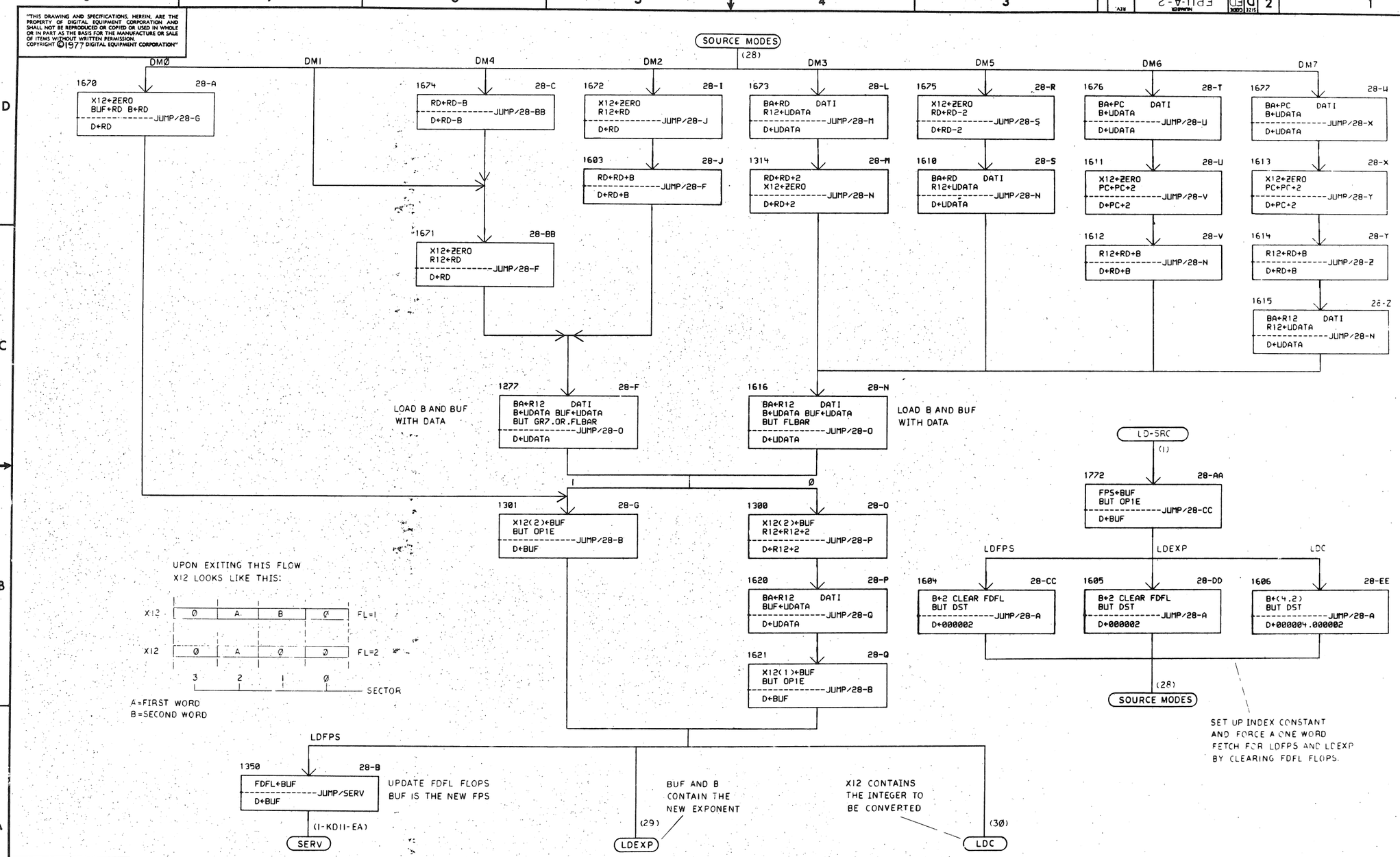

REVISIONS		
CHK	CHANGE NO.	REV.

TITLE	SIZE	CODE	NUMBER	REV.
FP11-A FLOWS (28)	D	FD	FP11-A-2	
SCALE —	SHEET 31 OF 40	DIST.		

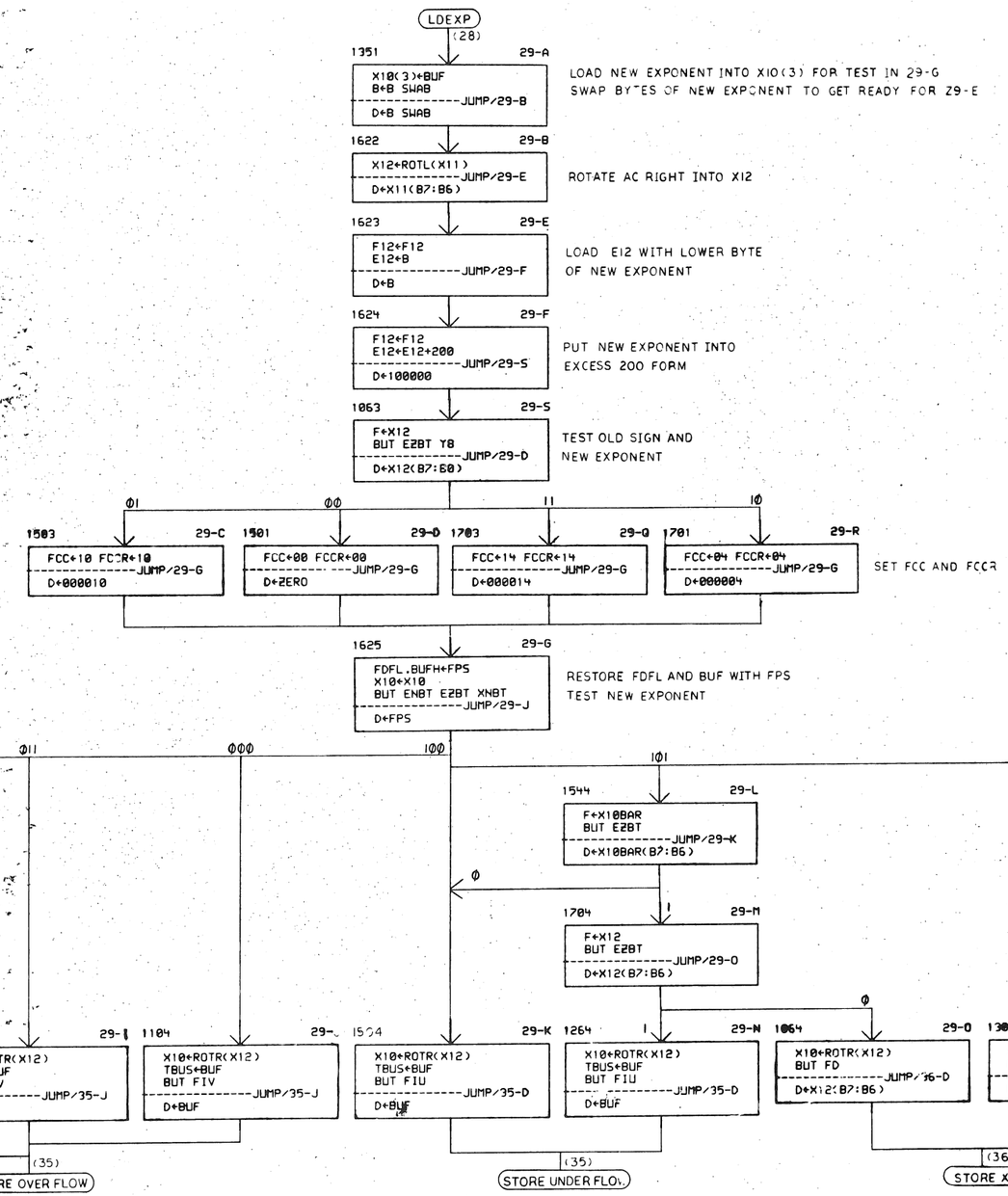

REVISIONS		
CHK	CHANGE NO.	REV.

TITLE	SIZE	CODE	NUMBER	REV.
FP11 A FLOWS (29)	D	FD	FP11-A-2	
SCALE	SHEET 32 OF 40	DIST.		

136

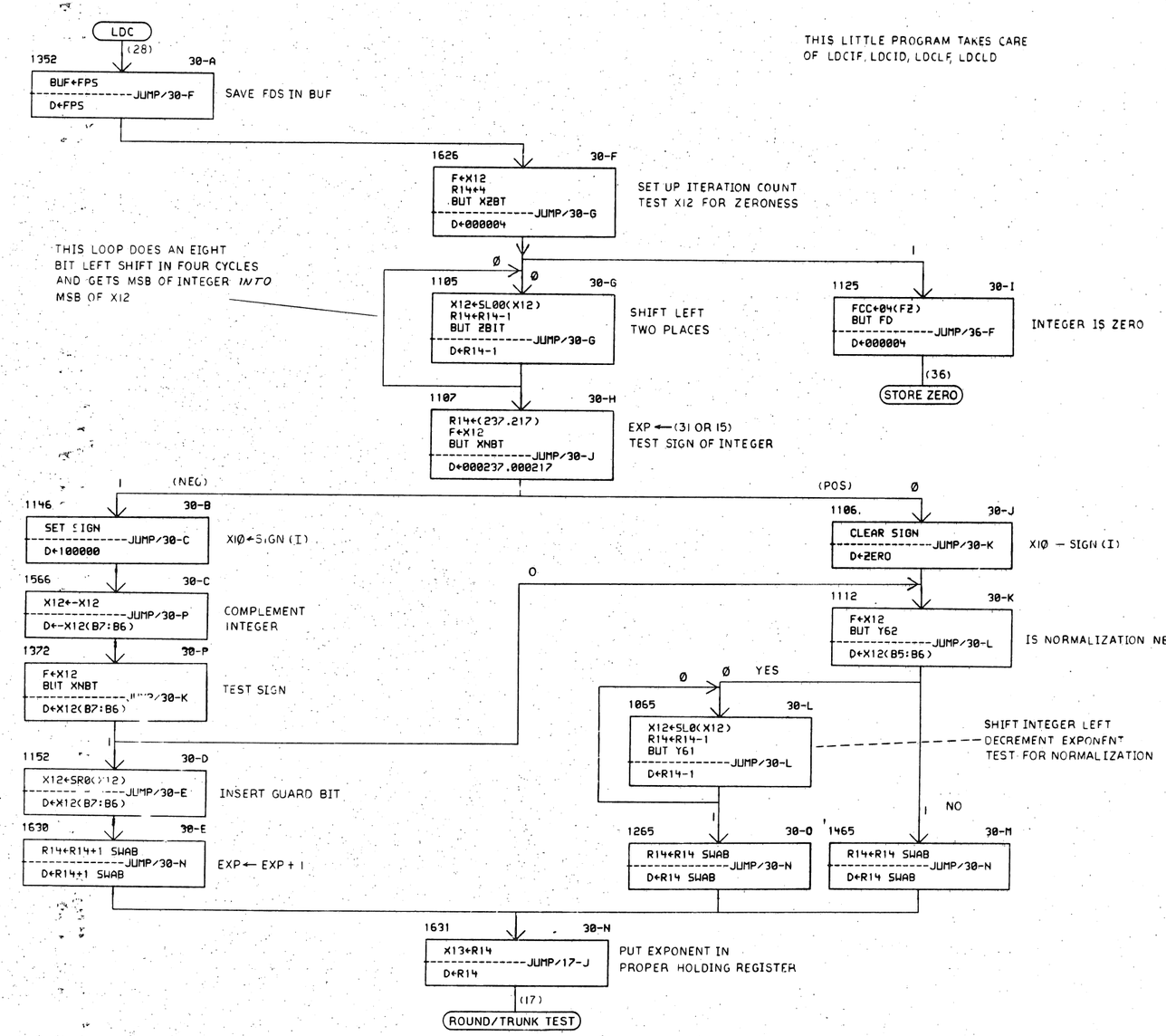

REVISIONS		
CHK	CHANGE NO.	REV.

TITLE	SIZE	CODE	NUMBER	REV.
FPII-A FLOWS (30)	D	FD	FPII-A-2	
SCALE —	SHEET 32 OF 40	DIST.		

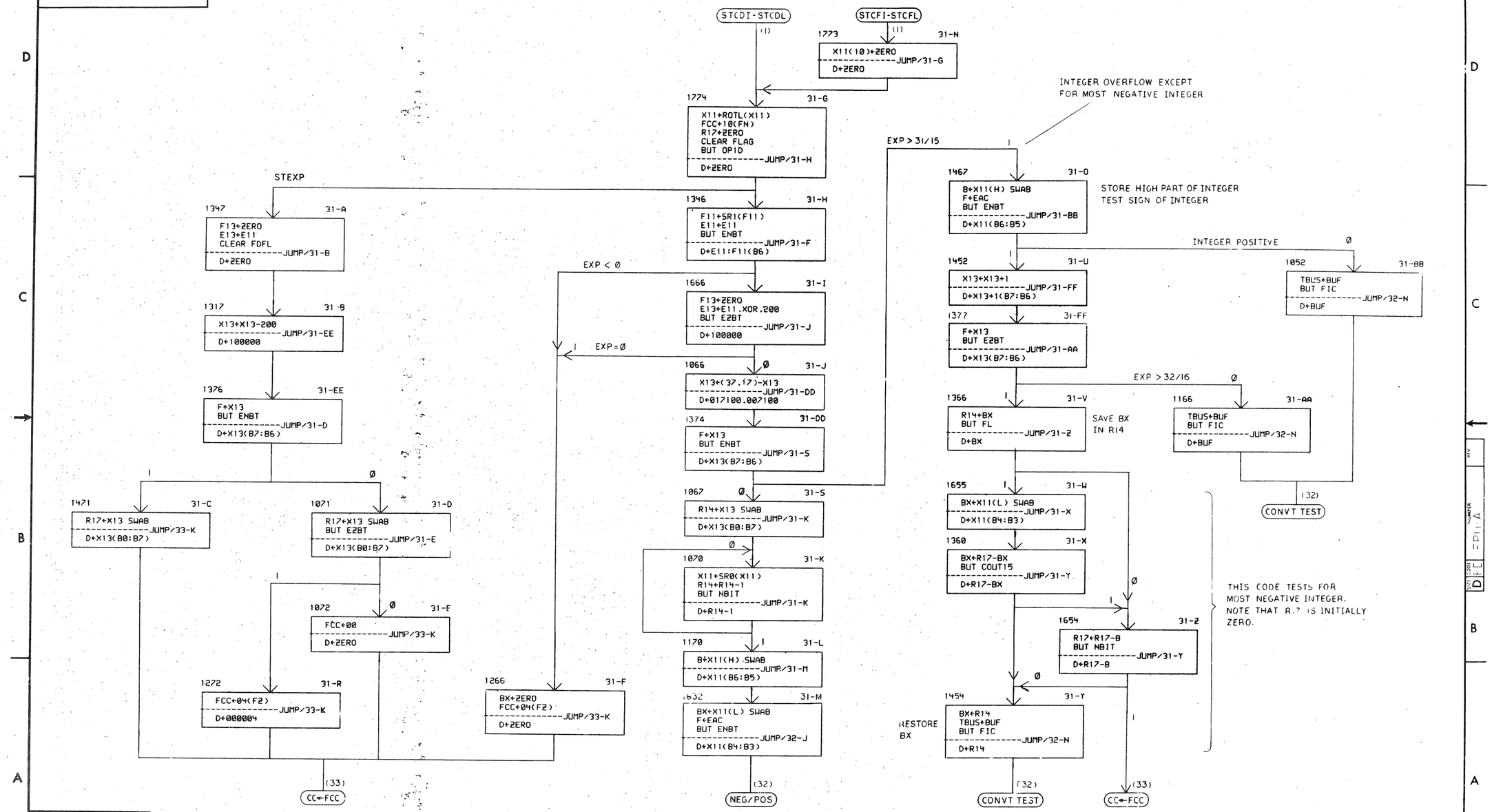

REVISIONS		
CHK	CHANGE NO.	REV.

TITLE	SIZE	CODE	NUMBER	REV.
FPII-A FLOWS (31)	D	FD	FPII-A-2	
SCALE —	SHEET 34 OF 40	DIST.		

138

UPON ENTERING THIS ROUTINE, THE INTEGER IS IN B AND BX, R17 CONTAINS ZERO. THE INTEGER IS COMPLEMENTED (IF NECESSARY) AND STORED IN R17 AND BX

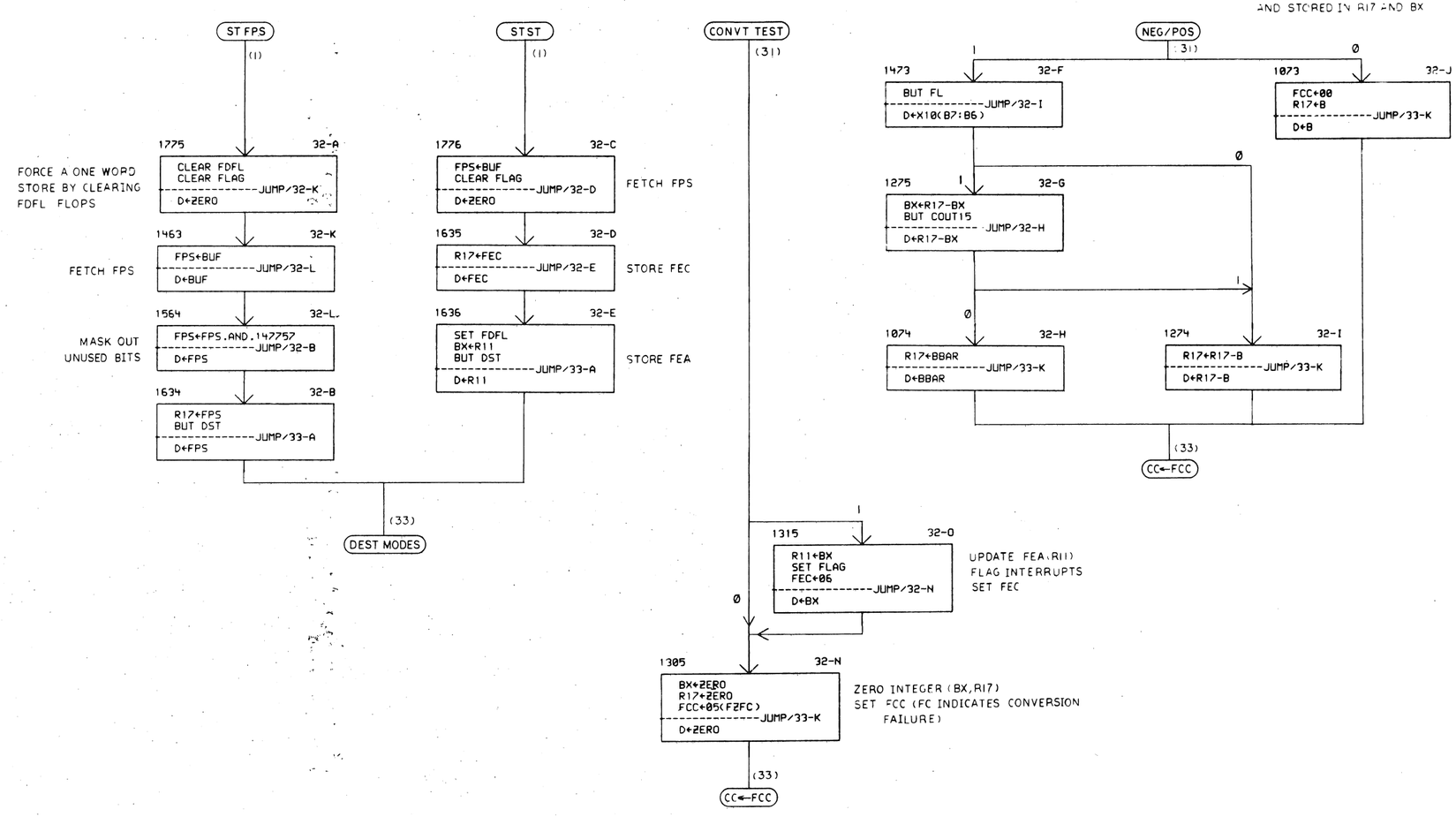

REVISIONS		
CHK	CHANGE NO.	REV.

TITLE	SIZE	CODE	NUMBER	REV.
FP11-A FLOWS (32)	D	FD	FP11-A-2	
SCALE —	SHEET 35 OF 40		DIST.	

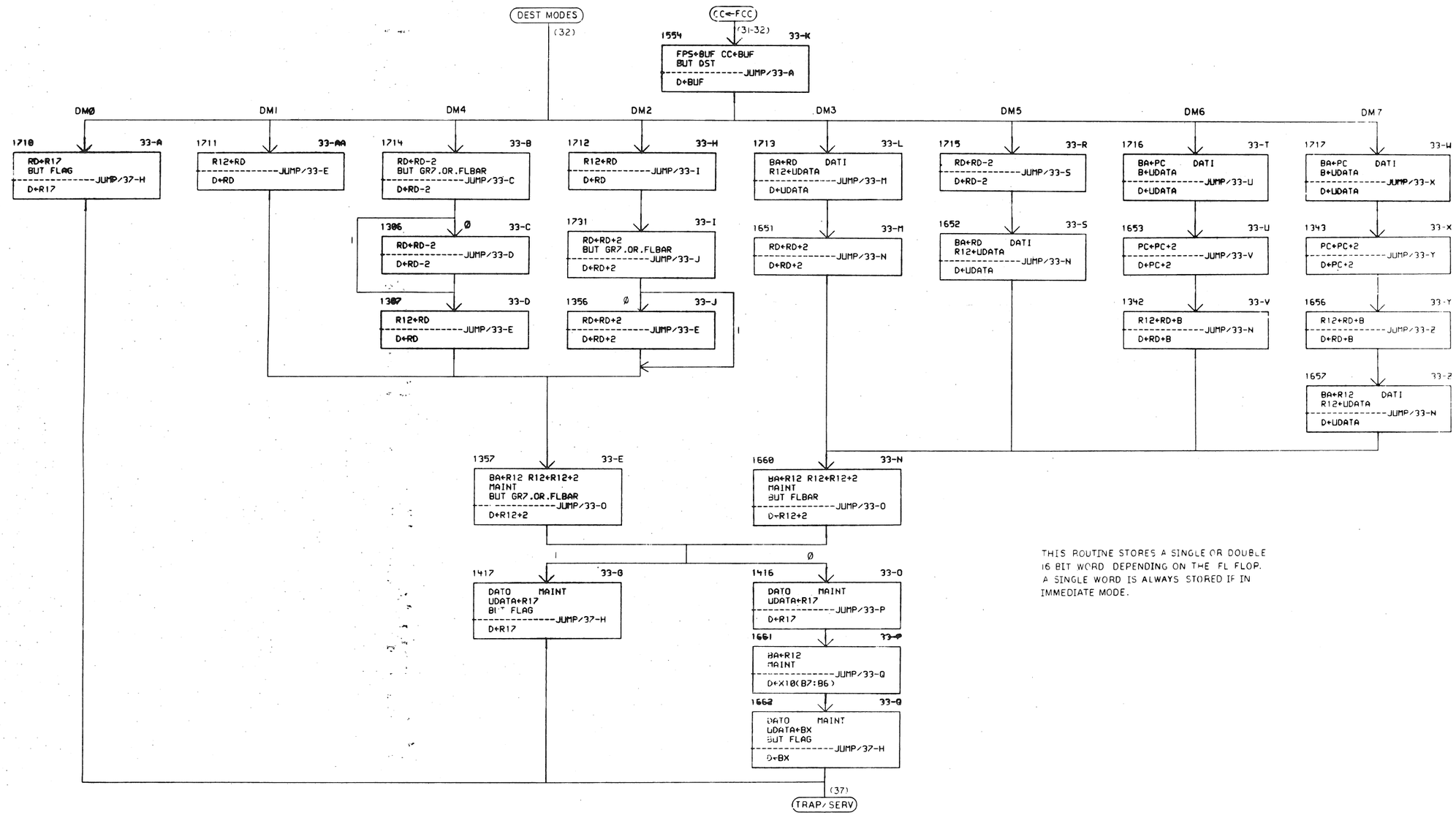

THIS ROUTINE STORES A SINGLE OR DOUBLE 16 BIT WORD DEPENDING ON THE FL FLOP. A SINGLE WORD IS ALWAYS STORED IF IN IMMEDIATE MODE.

REVISIONS		
CHK	CHANGE NO.	REV.

TITLE	SIZE	CODE	NUMBER	REV
FP11-A FLOWS (33)	D	FD	FP11-A-2	
SCALE —	SHEET 36 OF 40	DIST.		

140

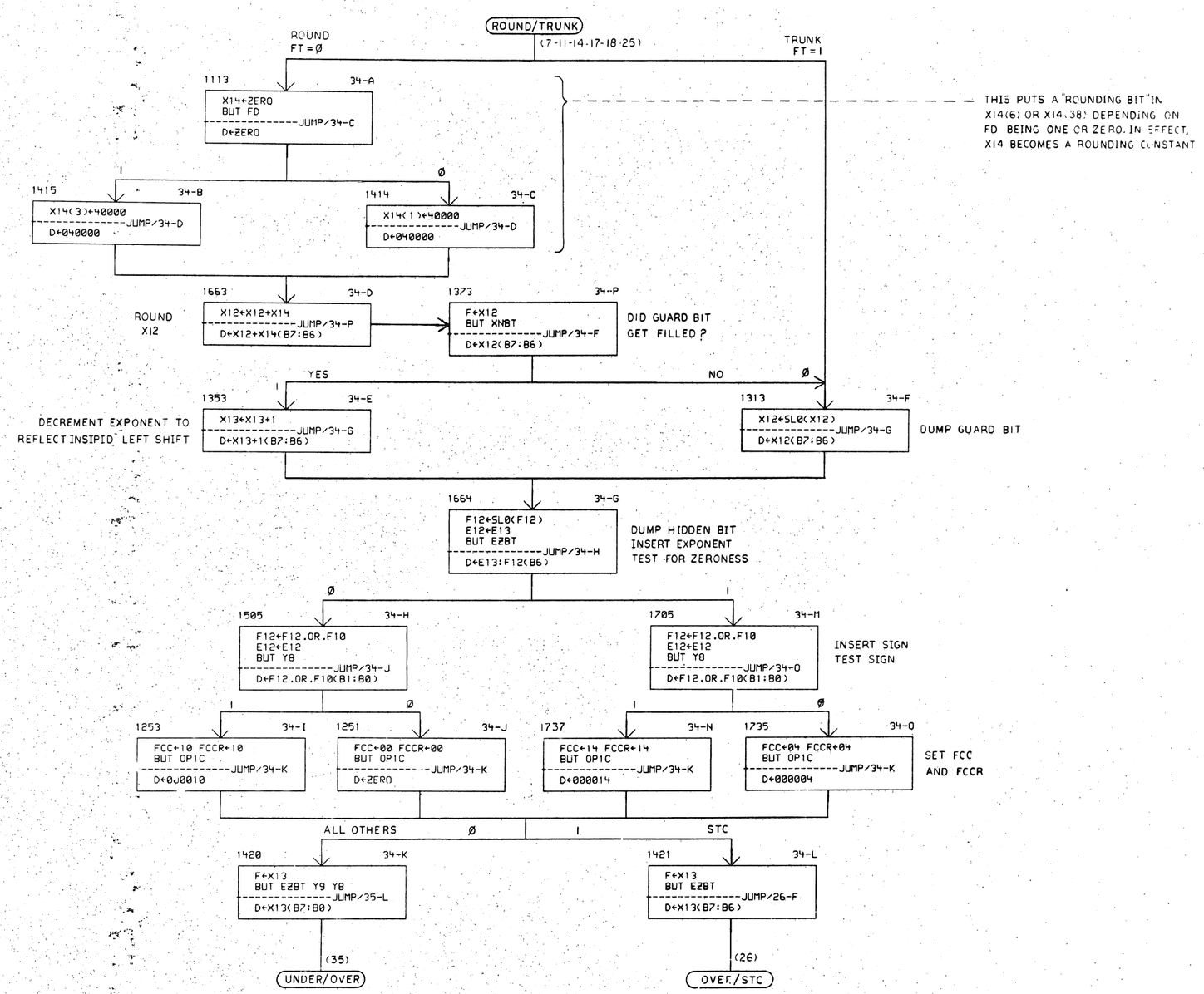

REVISIONS		
CHK	CHANGE NO.	REV.

TITLE	SIZE	CODE	NUMBER	REV.
FP11-A FLOWS (34)	D	FD	FP11-A-2	
SCALE —	SHEET 37 OF 42	DIST.		

141

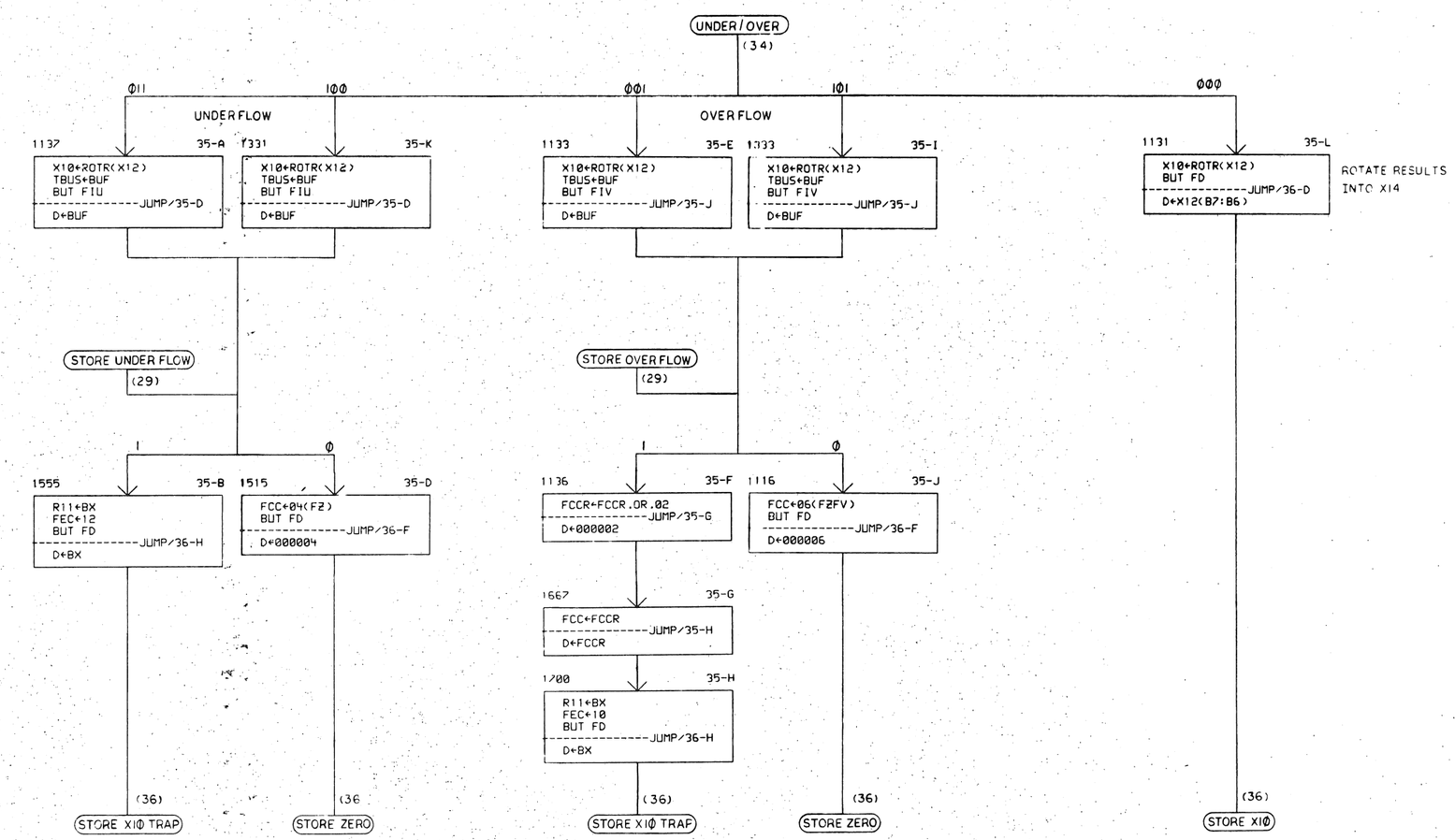

REVISIONS		
CHK	CHANGE NO.	REV.

TITLE	SIZE	CODE	NUMBER	REV.
FPII-A FLOWS (35)	D	FD	FPII A 2	
SCALE —	SHEET 38 OF 40	DIST.		

142

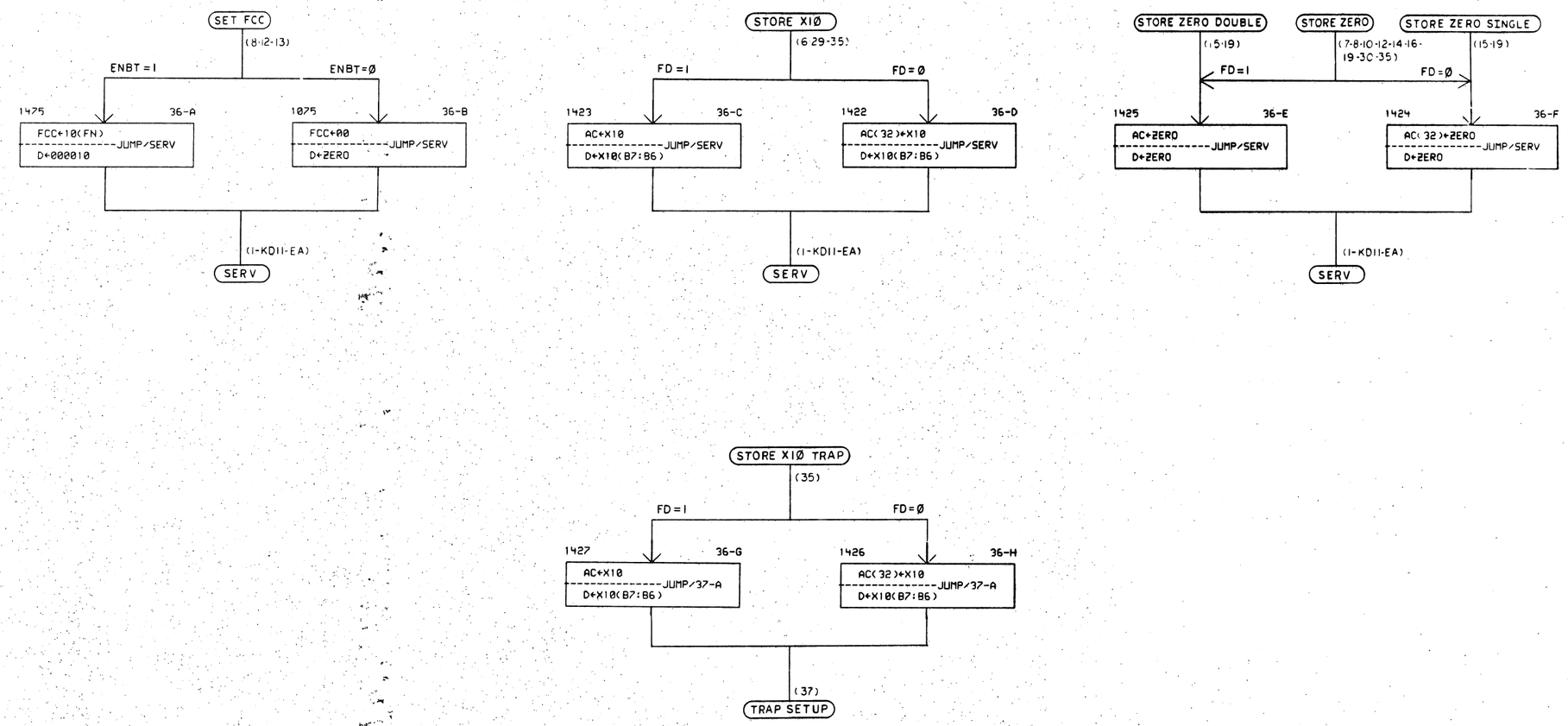

REVISIONS		
CHK	CHANGE NO.	REV.

TITLE	SIZE	CODE	NUMBER	REV.
FPII A FLOWS (36)	D	FD	FPII-A-2	
SCALE —	SHEET 33 OF 40	DIST.		

143

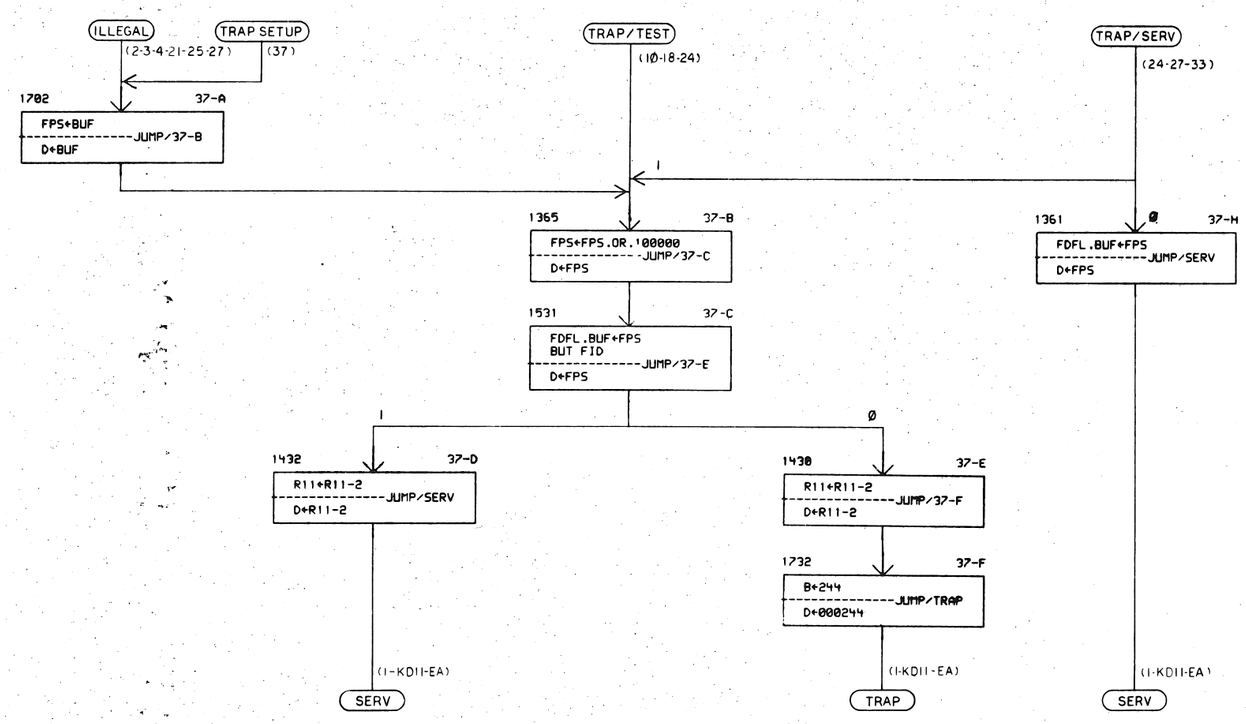

REVISIONS		
CHK	CHANGE NO.	REV.

TITLE	SIZE	CODE	NUMBER	REV.
FP11-A FLOWS (37)	D	FD	FP11-A-2	
SCALE —	SHEET 40 OF 40	DIST.		

144