FIELD MAINTENANCE PRINT SET

TABLE OF CONTENTS

UNIT VARIATIONS COVERED BY THIS PRINT SET
RL11

RL11
Field Maintenance Print Set

Digital Equipment Corporation
PRINT SET ORDER NO. MPØØ153

REVISIONS		
REV.	CHG. NO.	DATE

USED ON OPTION/MODEL	
RL11	
SHEET 1 OF 1	

DRN. F.CARBERRY	DATE 2 JUN 76	TITLE: RL11 CONTROLLER ASSY
CHK'D F. Carberry	DATE 7 APR 77	
PROJ. ENG. D. F. Ellis	DATE 12 Apr 77	SIZE B / CODE TC / NUMBER RL11-Ø-2 / REV. *
FIELD SERV.	DATE 12 Apr 77	DIST.

digital

EN 01124-16-N675 (327)

DRB 124

DRAWING DIRECTORY

NOTE: FOR FIELD MAINTENANCE PRINT SET
SEE B-TC-RL11-Ø-2

UNIT VARIATIONS

VAR	TITLE

REVISIONS	
REV.	
CHANGE NO.	
CHK	

USED ON OPTION/MODEL	
RL11	
SHEET 1	OF 3

DRN. F.Carberry	DATE 2 JUN 76	TITLE RL11 CONTROLLER ASSY
CHK'D. F. Carberry	DATE 2 JUN 76	digital
PROJ. ENG. D.T. Ellis	DATE 12 APR 77	SIZE B / CODE DD / NUMBER RL11-Ø / REV *
PROD. R.J. Stratton	DATE 12 Apr 77	DIST.

EN-01062-1A-16-R972(325)

DRB 106A

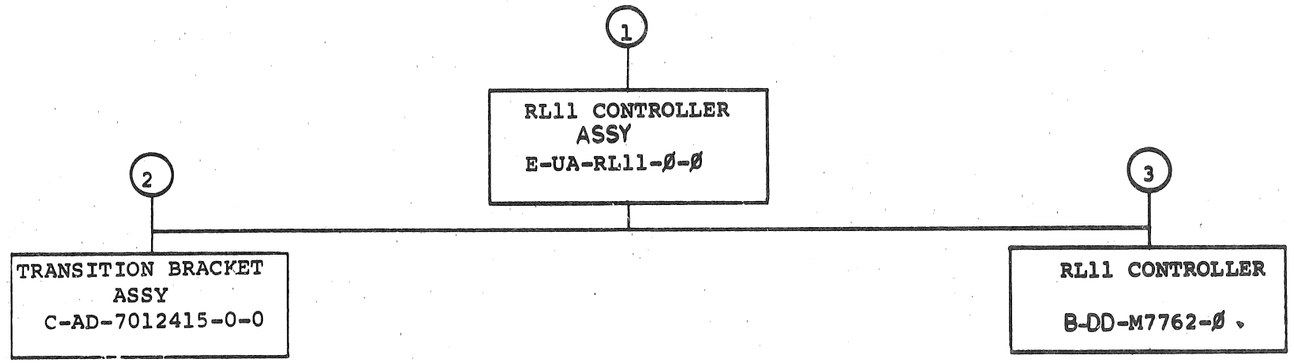

TITLE		SIZE	CODE	NUMBER	REV
RL11 CONTROLLER ASSY	SHEET 2 OF 3	B	DD	RL11-Ø	*

DRB 107
EN-1062A-03 16 R1175 (325)

FIND NO.	DRAWING NO.	DESCRIPTION	TYPE
	B-TC-RL11-Ø-2	TABLE OF CONTENTS	
	A-PL-RL11-Ø-4	SHIPPING LIST	
	MP00153	FIELD MAINTENANCE PRINT SET	
1	E-UA-RL11-Ø-Ø	RL11 CONTROLLER ASSY	E/M
	A-SP-RL11-Ø-3	RLØ1-PDP11 SUBSYSTEM FUNCTIONAL SPECIFICATION	E/M
	D-IA-7012293-Ø-Ø	TERMINATOR ASSY.	E/M
	D-UA-BCØ6R-Ø-Ø	CABLE ASSY	E
	A-PL-7012938-Ø-Ø	UNIT SELECT PLUG KIT	M
2	C-AD-7012415-Ø-Ø	TRANSITION BRKT ASSY	M
	C-IA-7415617-Ø-Ø	TRANSITION BRKT	M
3	B-DD-M7762-Ø	RL11 CONTROLLER	E

TYPE: E ELECTRICAL
M MECHANICAL
E/M ELECTRO/MECHANICAL

digital

TITLE RL11 CONTROLLER ASSY

SHEET 3 OF 3 | SIZE B | CODE DD | NUMBER RL11-Ø | REV *

DRB 108A

NOTES:

1. TERMINATOR ASSY (ITEM #4) TO BE INSTALLED IN "CABLE OUT" LOCATION IN LAST DRIVE OF SUB-SYSTEM.
2. WHEN INSTALLED IN BA11-K OR BA11L EXPANSION BOX, BC08R CABLE (ITEM #3) SHOULD BE FOLDED 90° AND ROUTED UP OUT OF THE BOX AS SHOWN.
3. WHEN ALTERNATE MOUNTING POSITION IS USED, CONNECTOR IN TRANSITION BRACKET MUST BE INVERTED SO THAT I/O CABLE FROM DRIVE WILL HANG IN A DOWNWARD POSITION AS SHOWN
4. ITEM #3 THRU ITEM #10 ARE NOT ASSEMBLED AT THIS POINT BUT MUST BE SHIPPED WITH UNIT FOR ASSEMBLY AT INSTALLATION.
5. PRIORITY JUMPER ASSY (ITEM #11) TO BE PLUGGED INTO M7762 AT FINAL ASSY
6. THE RL11 MODULE (M7762) WILL OCCUPY ONE HEX SPC SLOT.
7. JUMPER WIRE FROM CA1 TO CB1 ON THE SPC BACKPLANE MUST BE REMOVED AT INSTALLATION.

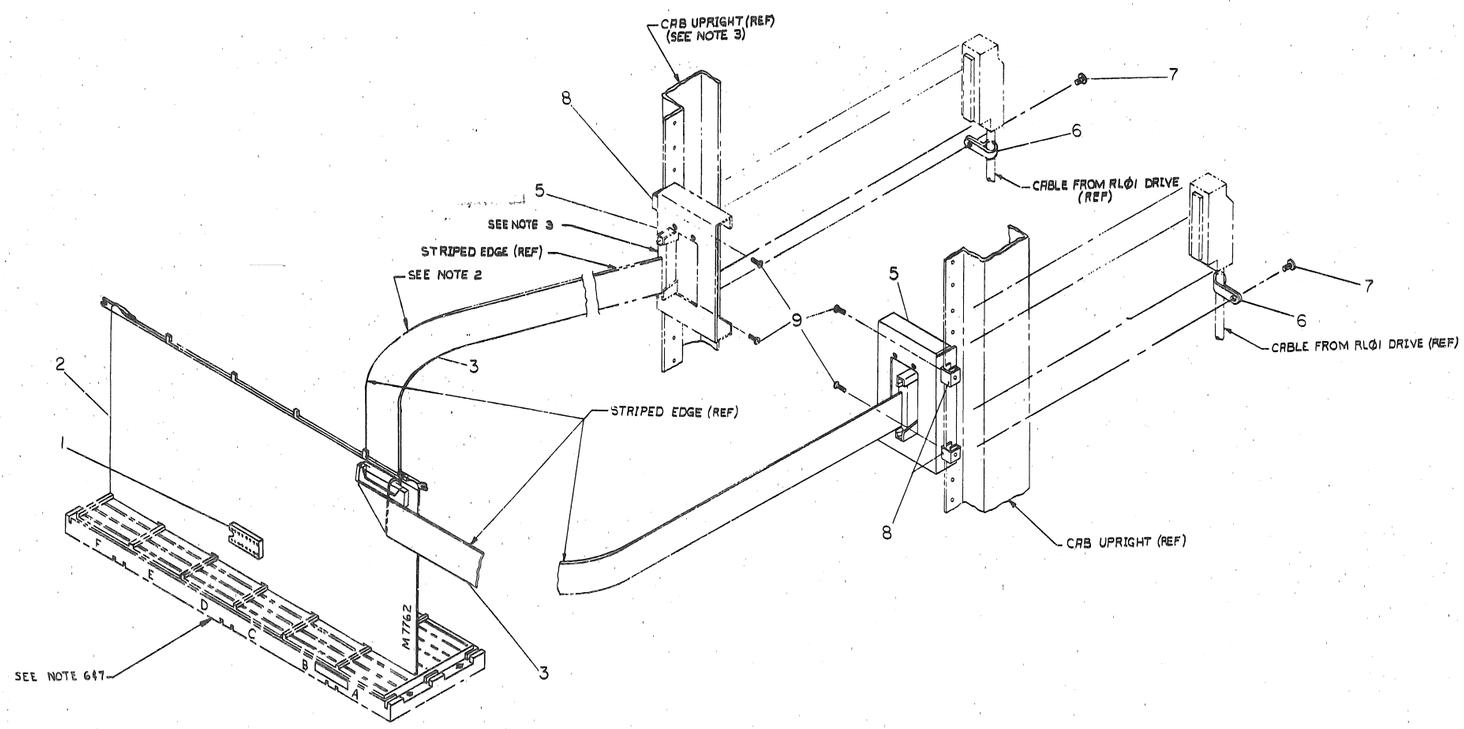

1	UNIT SELECT PLUG KIT	9-PL-7012938-00	10
2	SCREW, PHL TRS HD, #10-32 x .50 LG	9006073-03	9
2	NUT, SPRING #10-32	9007786-00	8
1	SCREW, TAP-TITE #8 x .38 LG	9006418-01	7
1	CLAMP, CABLE	9007083-00	6
1	TRANSITION BRACKET ASSY	C-AD-7012415-0-0	5
1	TERMINATOR ASSY	D-IA-7012293-0-0	4
1	CABLE ASSY	D-UA-BC08R-06	3
1	RL11 CONTROLLER	D-UA-M7762-0-0	2
1	PRIORITY JUMPER ASSY	7408778	1

QUANTITY & VARIATION	DESCRIPTION	DWG/PART NO.	ITEM NO.

UNLESS OTHERWISE SPECIFIED DIMENSIONS ARE IN INCHES

ANGLES ±0° 30'	CLASS OF ACCURACY (CHECK ONE)	NOMINAL DIMENSIONS				ON RANGE INCHES				OVER 40 to 100	OVER 100 to 200
SURFACE QUALITY IN MICROINCHES		OVER 0 to 6	OVER 6 to 12	OVER 12 to 24	OVER 24 to 48	OVER 48 to 96	OVER 96 to 192	OVER 192 to 384	OVER 384 to 768		
	MEDIUM ☐	±.004	±.008	±.01	±.015	±.020	±.025	±.04	±.06		
	PREFERRED ☐	±.013	±.016	±.015	±.04	±.063	±0.1				

THIRD ANGLE PROJECTION

REMOVE BURRS AND BREAK SHARP CORNERS

DO NOT SCALE DWG

MATERIAL: SEE PARTS LIST

FINISH

DRN. 12 NOV 73
CHK'D 2 DEC 73
ENG.
PROJ. ENG.
PROD.
NEXT HIGHER ASSY. CD-D-RL11-0
SCALE NONE
SHEET 1 OF 1

FIRST USED ON RL11

TITLE RL11 CONTROLLER ASSY

digital

SIZE	CODE	NUMBER	REV.
B	JA	RL11 2-12	A

DIST.

REVISIONS			
DOC.	DRAWING NO.	REV.	
	RL11-00002	A	

DEC FORM NO. DRC 1004B

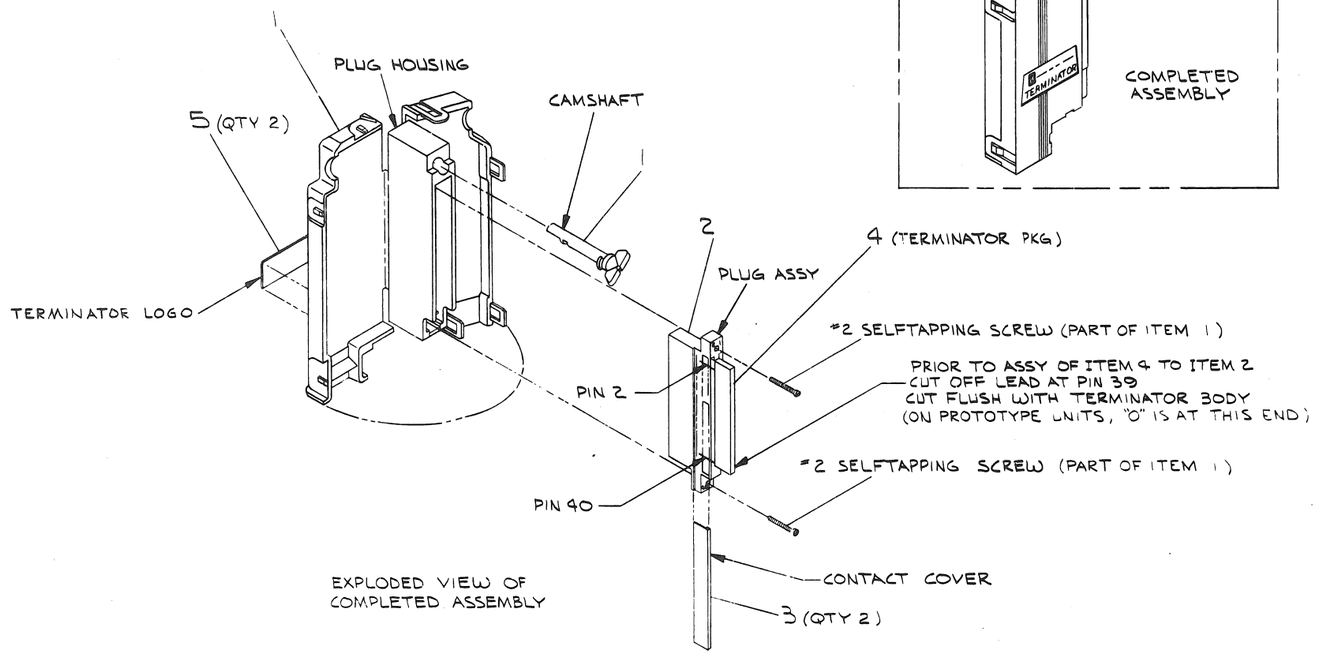

EXPLODED VIEW OF COMPLETED ASSEMBLY

2	LOGO, TERMINATOR	A-OC-7416678-0-0	5
1	TERMINATOR PKG	1313242-00	4
2	COVER, CONTACT	1211591-11	3
1	PLUG ASSY	1211591-07	2
1	CONN PLUG HSG & CAMSHAFT KIT	1211591-34	1
	DESCRIPTION	DWG./PART NO.	ITEM NO.

7012293-0

UNLESS OTHERWISE SPECIFIED DIMENSIONS ARE IN INCHES

ANGLES ±0° 30'	CLASS OF ACCURACY (CHECK ONE)	OVER 0 TO 0.3	OVER 0.3 TO 1.2	OVER 1.2 TO 4.0	OVER 4.0 TO 12.0	OVER 12.0 TO 40.0	OVER 40.0 TO 80.0
SURFACE QUALITY IN MICROINCHES	MEDIUM ☐	±.004	±.008	±.012	±.016	±.024	±.04
	PREFERRED ☐	±.012	±.016	±.025	±.04	±.063	±0.1

NOMINAL DIMENSION RANGE INCHES

QUANTITY & VARIATION

THIRD ANGLE PROJECTION

REMOVE BURRS AND BREAK SHARP CORNERS

DO NOT SCALE DWG

MATERIAL: SEE PARTS LIST

FINISH: —

DRN.	D. Lamp	7-JAN-76
CHK'D	W. Mann	26/APR/76
ENG	Walt Dunham	30/Ap/76
PROJ. ENG		5/5/76
PROD.		6/1/76

NEXT HIGHER ASSY.: E-UA-RK611-0-0

SCALE: NONE

SHEET 1 OF 1

FIRST USED ON: RK06

digital

TITLE: TERMINATOR ASSY

SIZE	CODE	NUMBER	REV.
D	IA	7012293-0-0	A

DIST.

REVISIONS

CHK	CHANGE NO.	REV.
JC	7012293-00001	A

W. DUNHAM 9/29/76

D.E.C. 7-1967

SIZE	CODE	NUMBER	REV.
B	DD	M7762-Ø	C

DRAWING NO	NO. OF SHTS	PART NO.	DESCRIPTION	REVISIONS			
B-DD-M7762-Ø	1		RL11 CONTROLLER	*	A	B	C
D-UA-M7762-Ø-Ø	5		RL11 CONTROLLER	D	E	F	H
B-PL-M7762-Ø-Ø	5		RL11 CONTROLLER	D	E	F	H
D-CS-M7762-Ø-1	11		RL11 CONTROLLER	D	E	F	H
D-BD-M7762-Ø-2	1		RL11 CONTROLLER BLOCK DIAGRAM	D	D	D	D
D-FD-M7762-Ø-3	3		RL11 CONTROLLER FLOW DIAGRAM	D	E	E	E
D-TD-M7762-Ø-4	13		RL11 CONTROLLER TIMING DIAGRAM	D	E	F	F
D-MD-5012167-Ø-Ø	5		DRILL & ETCH DWG.	D	D	D	E
		5012167	ETCHED CIRCUIT BOARD	E	E	E	F
M7762-Ø-L			P.C. DESIGN DATA BASE	REF	-	-	-
M7762-O-PL			INSERTION P/L DATA BASE	REF	-	-	-

NOTES:

REVISIONS		
DATE	CHG NO.	REV.
-	ORIG	-
9-77	00001	A
11-77	00002	B
2-78	00003	C

digital

USED ON OPTION/MODEL: RL11

DRN.	D. Mayuski	2/Mar/78
CHK'D	P. Bowman	8 APR 77
ENG	Valerie Fin	8 Apr 77
PROD	R. J. Stolb	8 Apr. 77

TITLE: RL11 CONTROLLER

SIZE	CODE	NUMBER	REV.
B	DD	M7762-Ø	C

SHEET 1 OF 1

DRB 126 EN-01149-16-N176(325)

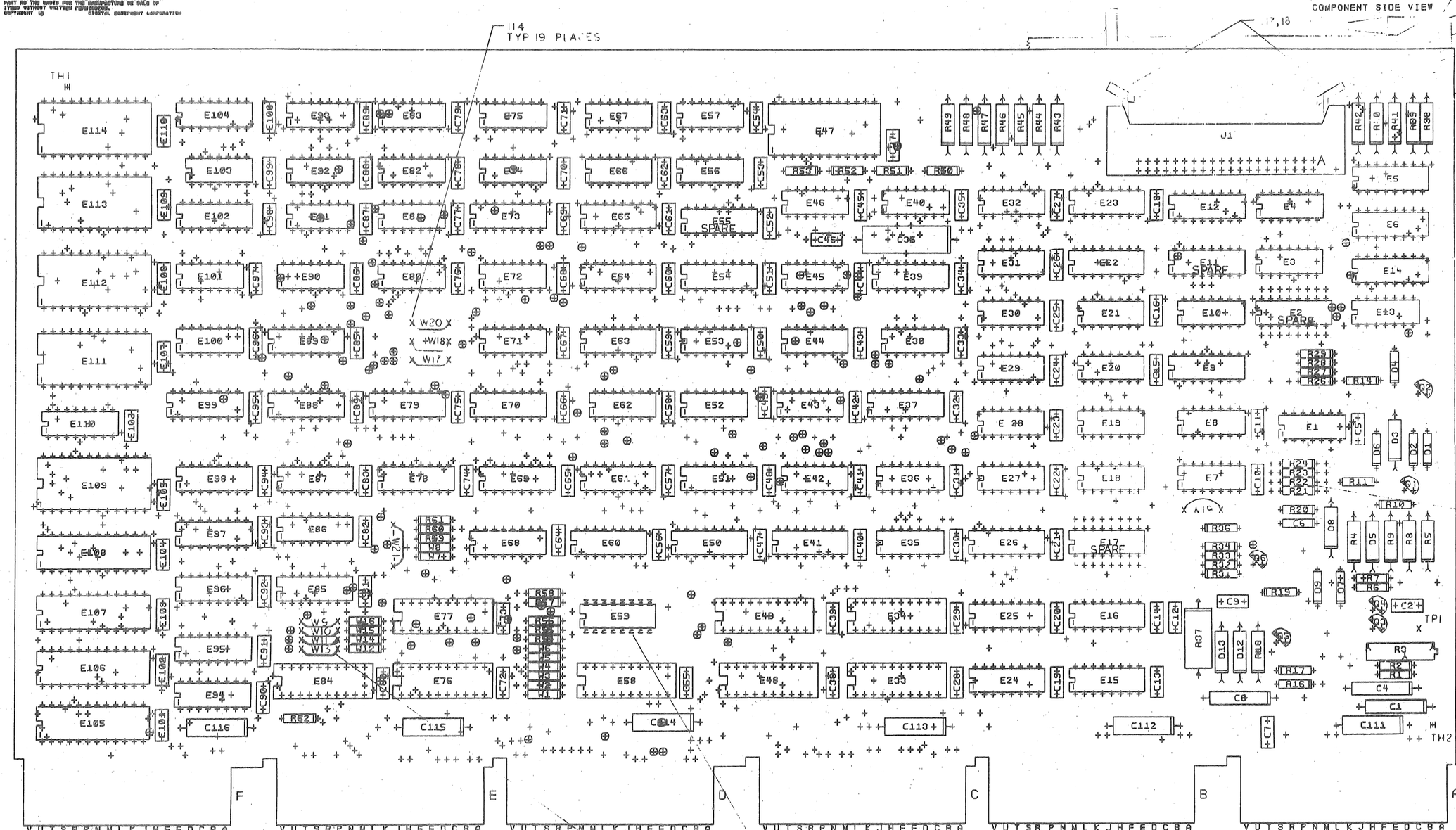

NOTES: 1. R21 THRU R24 ARE SPARES.

CHK	CHANGE NO	REV

ETCH REV.	F-P3
P.C. DESIGN DATA BASE REV.	FL3&FM3

SIGNATURES	DATE
DRN. R. Birdsen	12-21-77
CHK'D. [illegible]	12/21/77
ENG. [illegible]	3/13/78
PROJ.ENG. [illegible]	3/13/78
PROD.	
SCALE 2/1	
SHT. 1 OF 5	
NEXT HIGHER ASSY. B-DD-M7762-0	

digital

TITLE RL11 CONTROLLER

SIZE	CODE	NUMBER	REV
D	UA	M7762-0-0	H

MS# 121616

LAYER 1

M7762 5012167F-P3

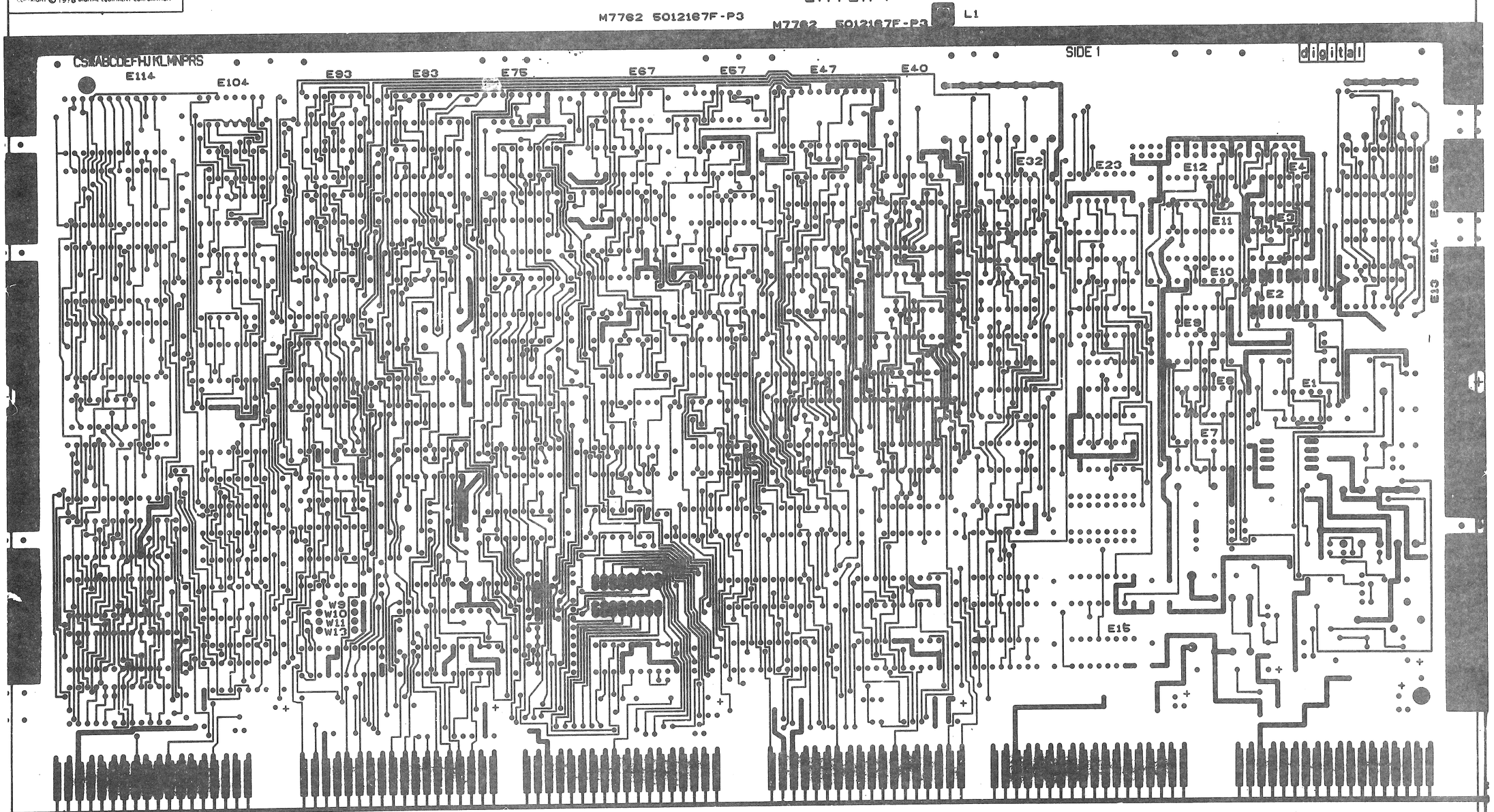

REVISIONS		
CHK	CHANGE NO	REV

TITLE	SIZE	CODE	NUMBER	REV.
RL11 CONTROLLER	D	UA	M7762-0-0	H
SCALE 2/1	SHEET 2 OF 5		DIST.	

M7762 5012167F-P3 L2

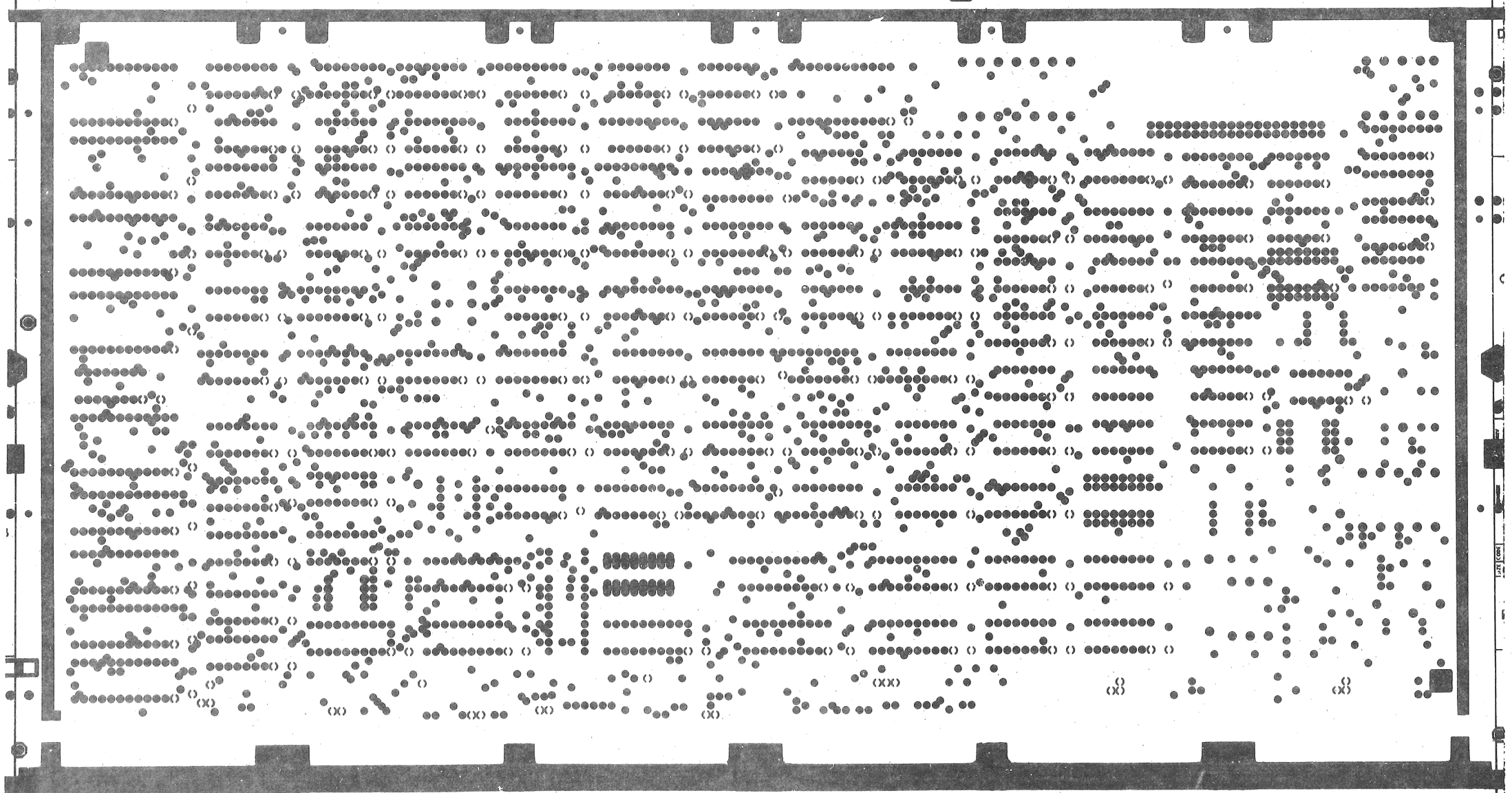

REVISIONS		
CHG	CHANGE NO	REV

TITLE	SIZE	CODE	NUMBER	REV.
RLII CONTROLLER	D	UA	M7762-0-0	H
SCALE 2/1 SHEET 3 OF 5	DIST.			

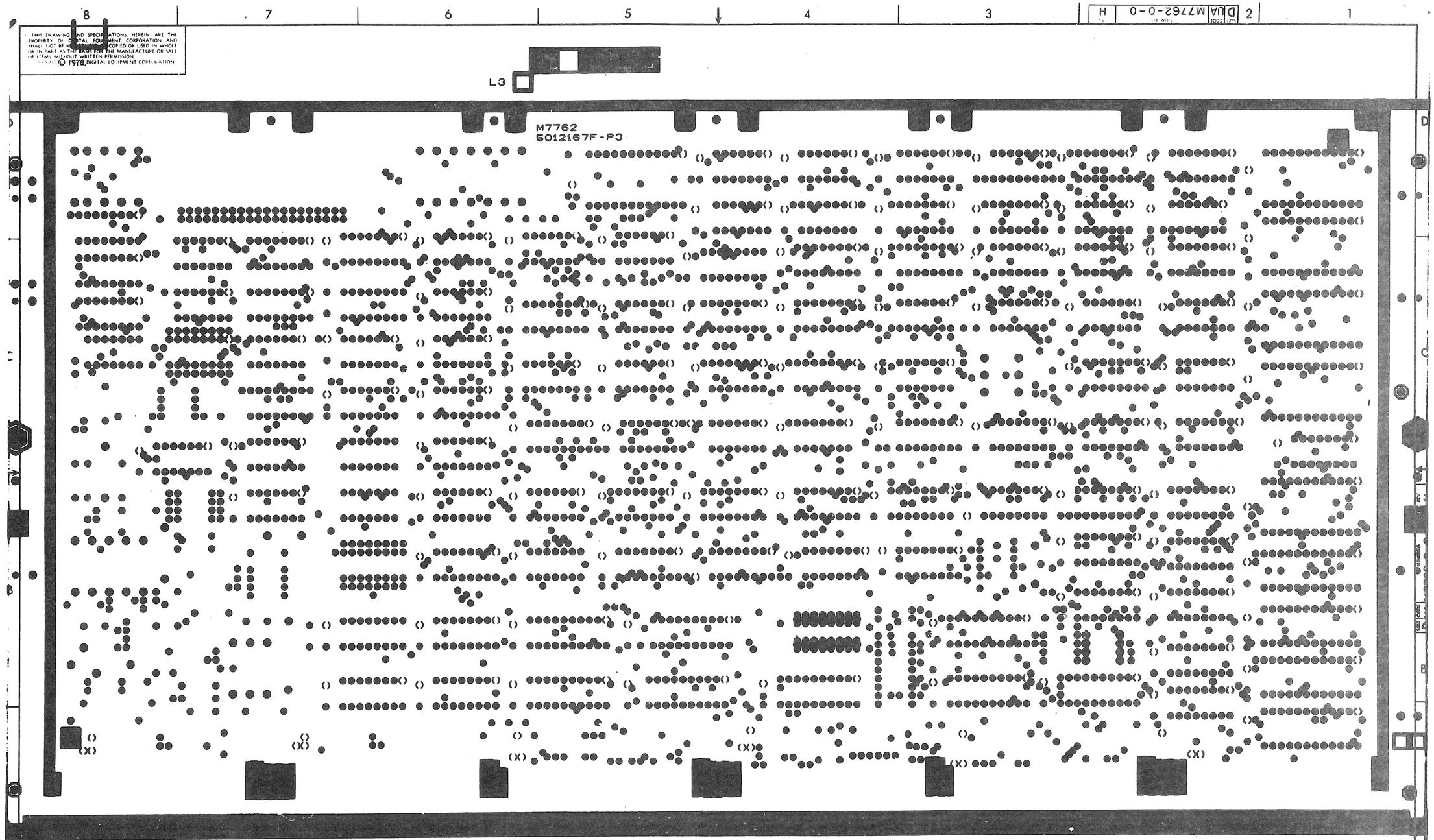

REVISIONS		
CHK	CHANGE NO	REV

TITLE	SIZE	CODE	NUMBER	REV.
RL11 CONTROLLER	D	UA	M7762 0 0	H
SCALE 2/1	SHEET 4 OF 5		DIST.	

LAYER H
L4
M7762 RL11 CONTROLLER 5012167F-P3
SIDE 2
RLII
CONTROLLER
SIZE D
CODE UA
NUMBER M7762 0 0
REV. H
SCALE 2/1
SHEET 5 OF 5
DIST

DIGITAL EQUIPMENT CORPORATION
PARTS LIST

MADE BY D. MAYUSKI	CHECKED D. Bauman	SECTION 1
DATE 7 MAR 77	DATE 29 MAR 77	
ENG Glen Lim	PROD R. J. Stello	ISSUED SECTION 1
DATE 8 Apr 77	DATE 5 Apr. 77	

NOTES: USED ON: OPTION/MODEL RL11

ITEM NO.	DRAWING NO.	PART NO.	DESCRIPTION	QUANTITY/VARIATION	REF DESIGNATION
	D-CS-M7762-Ø-1		CIRCUIT SCHEMATIC	REF	
	D-UA-M7762-Ø-Ø		UNIT ASSEMBLY	REF	
	D-DD-M7762-Ø		DWG. DIRECTORY	REF	
	D-MD-5012167-Ø-Ø		DRILL & ETCH DWG.	REF	
1		5012167	ETCHED CIRCUIT BOARD	1	
2		10-00082-00	CAP. 68 UFD 15V 10%	1	C36
3		10-01610-00	CAP. 01 UFD 100V	100	C5,C7,C10 thru C16, C18 thru C35, ~~C37 thru C45~~ C47, thru C110
4		10-05306-00	CAP. 6.8 UFD 35V 10%	8	C1,C8,C111 thru C116
5		10-12784-00	CAP. .047 UFD 50V	1	C46
6		10-10274-00	CAP. .22 UFD 50V	1	C6
7		10-13466-04	CAP. 33 PFD 50V	1	C9
8		10-13466-06	CAP. 100 PFD 50V	1	C2
~~9~~		~~10-10101-00~~	~~CAP. 220 PFD 100V~~	~~2~~	~~C3,C17~~
10		10-05784-00	CAP. .01 UFD 100V 10%	1	C4
11		11-11577-00	DIODE IN4454	5	D1,D2,D6,D7,D9, ~~D10,D11,D14,D15~~
12		11-10994-00	DIODE IN751A	4	D5,D8,D12,D13
13		11-00125-00	DIODE IN758A	1	D4
14		11-05871-00	DIODE 5.1V 1% AZ1 4M5	1	D3
15		12-09838-00	SOCKET, PRIORITY JUMPER 16 PIN	1	E59
16		12-09941-02	CONN 40 PIN	1	J1
17		12-09941-03	CONN. LOCK LEFT	1	

E.C.O. NO. 00001 00002 00003

TITLE	ASSY NO.	SIZE	CODE	NUMBER	REV.
RL11 CONTROLLER	D-UA-M7762-00	B	PL	M7762-0-0	H
	SHEET 1 OF 5	INSERTION PARTS LIST DATA BASE REV E			

DIGITAL EQUIPMENT CORPORATION
PARTS LIST

MADE BY	DAVE MAWUSKI	CHECKED	S. Bowman
DATE	7 MAR 77	DATE	29 MAR 77
ENG	Glen Lee	PROD	R. L. Stott
DATE	8 Apr 77	DATE	8 Apr. 77

SECTION 1

ISSUED SECTION 1

NOTES: USED ON: OPTION/MODEL RL11

ITEM NO.	DRAWING NO.	PART NO.	DESCRIPTION	QUANTITY/VARIATION	REF DESIGNATION
18		12-09941-04	CONN. LOCK RIGHT	1	
19		12-10711-02	HANDLE, ASSY.	1	
20		13-00005-05	RES. PACK 5% 82Ω	1	E13
21		13-09143-09	RES. POT. 3/4 W. 5K 10%	1	R3
22		13-01781-00	RES. 82 1/2W. 5%	12	R38 thru R49
23		13-01424-00	RES. 680 1/4W. 5%	6	R16,R20,R53,R60,R61,R52
24		13-00295-00	RES. 330 1/4W. 5%	3	R27,R34,R62
25		13-11522-00	RES. 200 1/4W. 5%	1	R28.
26		13-11422-00	RES. 178 1/4W. 1%	4	R54,R55,R58,R59
27		13-05125-00	RES. 383 1/4W. 1%	2	R56,R57
28		13-00229-00	RES. 100 1/4W. 5%	1	R29,~~R13~~
29		13-00262-00	RES. 180 1W. 5%	1	R37
30		13-01322-00	RES. 180 1/4W. 5%	1	R6
31		13-00285-00	RES. 270 1/2W. 5%	2	R8,R9
32		13-02858-00	RES. 100 1/4W 1%	1	R2
33		13-14042-00	RES. 102 1/4W. 1%	1	R1
34		13-00274-00	RES. 220 1/2W. 5%	1	R4
35		13-02715-00	RES. 2K 1/4W. 1%	1	R7
36		13-01981-00	RES. 2.94K 1/4W 1%	1	R10
37		13-12930-00	RES. 5.1K 1/4W. 5%	1	R11
~~38~~		~~13-00417-00~~	~~RES. 2.2K 1/4W. 5%~~	~~2~~	~~R12,R30~~
39		13-01775-00	RES. 820 1/4W. 5%	1	R14
~~40~~		~~13-01972-00~~	~~RES. 270 1/4W. 5%~~	~~1~~	~~R15~~
41		13-02676-00	RES. 3K 1/4W. 1%	1	R17
42		13-00296-00	RES 330 1/2W. 5%	1	R18
43		13-00365-00	RES. 1K 1/4W. 5%	2	R19,R33
~~44~~		~~13-00247-00~~	~~RES. 120 1/4W 5%~~	~~1~~	~~R25~~
45		13-01320-00	RES. 1.2K 1/4W. 5%	1	R26
46		13-00447-00	RES. 4.7K 1/4W 5%	1	R31

E.C.O. NO.

TITLE: RL11 CONTROLLER

ASSY NO. D-UA-M7762-00

SHEET 2 OF 5

SIZE	CODE	NUMBER	REV.
B	PL	M7762-0-0	H

INSERTION PARTS LIST DATA BASE REV E

DIGITAL EQUIPMENT CORPORATION
PARTS LIST

MADE BY D. MAYUSKI	CHECKED	SECTION 1	
DATE 7 MAR 77	DATE 29 MAR 77		
ENG	PROD	ISSUED SECTION 1	
DATE 8 Apr 77	DATE 8 Apr 77		

NOTES: USED ON: OPTION/MODEL RL11

ITEM NO.	DRAWING NO.	PART NO.	DESCRIPTION	QUANTITY/VARIATION	REF DESIGNATION
47		13-00271-00	RES. 220 1/4W. 5%	1	R32
~~48~~		~~13-02388-00~~	~~RES. 2K 1/4W 5%~~	~~1~~	~~R35~~
49		13-00398-00	RES. 1.8K 1/4W 5%	1	R50
50		13-00488-00	RES. 12K 1/4W 5%	1	R51
51		13-02381-00	RES. 200 1/2W 5%	1	R5
52		15-03409-01	TRANS. 2N6534B	1	Q2
53		15-13489-00	TRANS. 2N4401	1	Q3
54		15-13490-00	TRANS. 2N4403	4	Q1,Q4,Q5,Q6
55		16-14666-00	DELAY LINE 500 NS 10 TAP	1	E18
56		16-10033-00	DELYA LINE 100 NS 9 TAP	1	E9
57		16-11243-00	DELAY LINE 250 NS 10 TAP	1	E19
58		16-14159-00	DELAY LINE 50 NS 10 TAP	1	E22
59		18-11660-12	MOTOROLA OSC. 8.2 MHZ	1	E35
~~60~~		~~19-09930-00~~	~~I.C. DEC 7405~~	~~1~~	~~E2~~
61		19-05547-00	I.C. DEC 7474	1	E67
62		19-10153-00	I.C. 74150	1	E109
63		19-14072-00	I.C. 74159	1	E47
64		19-10650-00	I.C. DEC 74161	4	E98,E99,E104,E110
65		19-09061-00	I.C. DEC 74H52	1	E80
66		19-10532-00	I.C. DEC 74S00	2	E7,E32
67		19-13312-00	I.C. 7428	1	E29
68		19-10534-00	I.C. DEC 74S04	4	E20,E27,E30,E43
69		19-10536-00	I.C. DEC 74S10	1	E8
70		19-11712-00	I.C. 74S51	1	E74
71		19-10544-00	I.C. DEC 74S74	5	E21,E31,E66,E53,E56
72		19-10545-00	I.C. DEC 74S112	1	~~E28~~,E63
73		19-11911-00	I.C. DEC 74S124	1	E16
74		19-12799-00	I.C. DEC 74LS00	2	E38,E45

E.C.O. NO.

TITLE	ASSY NO.	SIZE	CODE	NUMBER	REV.
RL11 CONTROLLER	D-UA-M7762-0-0	B	PL	M7762-0-0	H
	SHEET 3 OF 5	INSERTION PARTS LIST DATA BASE REV E			

DIGITAL EQUIPMENT CORPORATION
PARTS LIST

MADE BY D. MAYUSKI	CHECKED D. Bowman	SECTION 1
DATE 7 MAR 77	DATE 29 MAR 77	
ENG Colin Lee	PROD R. L. Stott	ISSUED SECTION 1
DATE 8 Apr '77	DATE 8 Apr. 77	

NOTES: USED ON: OPTION/MODEL RL11

ITEM NO.	DRAWING NO.	PART NO.	DESCRIPTION	QUANTITY/VARIATION	REF DESIGNATION
75		19-12801-00	I.C. DEC 74LS02	2	E46,E81
76		19-12803-00	I.C. DEC 74LS04	2	E72,E92
77		19-12805-00	I.C. DEC 74LS08	3	E1,E40,E71
78		19-12808-00	I.C. DEC 74LS11	1	E36
79		19-12810-00	I.C. DEC 74LS20	1	E62
80		19-12816-00	I.C. DEC 74LS32	3	E42,E52,E91
81		19-12820-00	I.C. DEC 74LS51	3	E44,E82,E93
82		19-12824-00	I.C. DEC 74LS74	3	E57,E90,E103
83		19-12829-00	I.C. DEC 74LS86	1	E83
84		19-12834-00	I.C. DEC 74LS112	2	E12,E54
~~85~~		~~19-10436-00~~	~~I.C. DEC 74123~~	~~1~~	~~E39~~
86		19-12843-00	I.C. DEC 74LS139	2	E37,E70
87		19-12844-00	I.C. DEC 74LS151	1	E102
88		19-12845-00	I.C. DEC 74LS153	2	E23,E65
89		19-12697-00	I.C. DEC 74LS174	1	E88
90		19-12854-00	I.C. DEC 74LS193	4	E24,E25,E85,E86
91		19-12696-00	I.C. DEC 74LS194A	1	E64
92		19-12864-00	I.C. 74LS279	1	E73
93		19-10268-00	I.C. DEC 75107B	3	E3,E4,E10,~~E11~~
94		19-11341-00	I.C. DEC 75113	3	E5,E6,E14
95		19-11527-00	I.C. DEC 8097	3	E61,E87,E89
96		19-12951-00	I.C. 8556	9	E50,E51,E60,E68,E78,E94 thru E97
97		19-11579-00	I.C. DEC 8641	3	E15,E26,E69
98		19-12083-00	I.C. DEC 8647	2	F41,E79
99		19-09713-00	I.C. DEC 8815	1	E100
100		19-13474-00	I.C. 9401	1	E75
101		19-13475-00	I.C. 9403	4	E105,thru E108
102		19-13040-00	I.C. DC005	8	E33,E34,E49,E48,E58,E76,E77,E84

E.C.O. NO.

TITLE	ASSY NO.	SIZE	CODE	NUMBER	REV.
RL11 CONTROLLER	D-UA-M7762-0-0	B	PL	M7762-0-0	H
	SHEET 4 OF 5	INSERTION PARTS LIST DATA BASE REV E			

DIGITAL EQUIPMENT CORPORATION
PARTS LIST

MADE BY D. MAYUSKI	CHECKED L. Grossman	SECTION 1
DATE 7 MAR 77	DATE 29 MAR 77	
ENG Glen Lin	PROD Richard	ISSUED SECTION 1
DATE 8 Apr '77	DATE 8 April 77	

NOTES:
USED ON: OPTION/MODEL
RL11

ITEM NO.	DRAWING NO.	PART NO.	DESCRIPTION	QUANTITY/VARIATION	REF DESIGNATION
103		23-Ø18B8	I.C. 82S114	1	E112
104		23-Ø16B8	I.C. 82S114	1	E113
105		23-Ø17B8	I.C. 82S114	1	E114
106		23-Ø2ØD1	I.C. 82S115	1	E111
107		90-00024-01	EYELET	12	
~~108~~		~~90-06735-00~~	~~SPLIT LUG~~	~~10~~	~~W17 thru W21~~
109		90-09185-00	JUMPER, INSULATED	12	W1 thru W8,W12,W14,W15,W16
110		19-10544-01	I.C. 74S74-60	2	E101,E28
~~111~~		~~90-08085-00~~	~~TERMINAL, TURRET~~	~~1~~	~~TP1~~
112		91-05740-55	WIRE, #30 AWG, GRN	A/R	
113		13-02862-00	RES. 5ØΩ 1/4W 1%	1	R36
114		90-09149-00	PIN,STAKING	19	
115		19-10951-00	I.C.,9602	1	E39

E.C.O. NO.

TITLE	ASSY NO.	SIZE	CODE	NUMBER	REV.
RL11 CONTROLLER	E-UA-M7762-0-0	B	PL	M7762-0-0	H
	SHEET 5 OF 5	INSERTION PARTS LIST DATA BASE REV E			

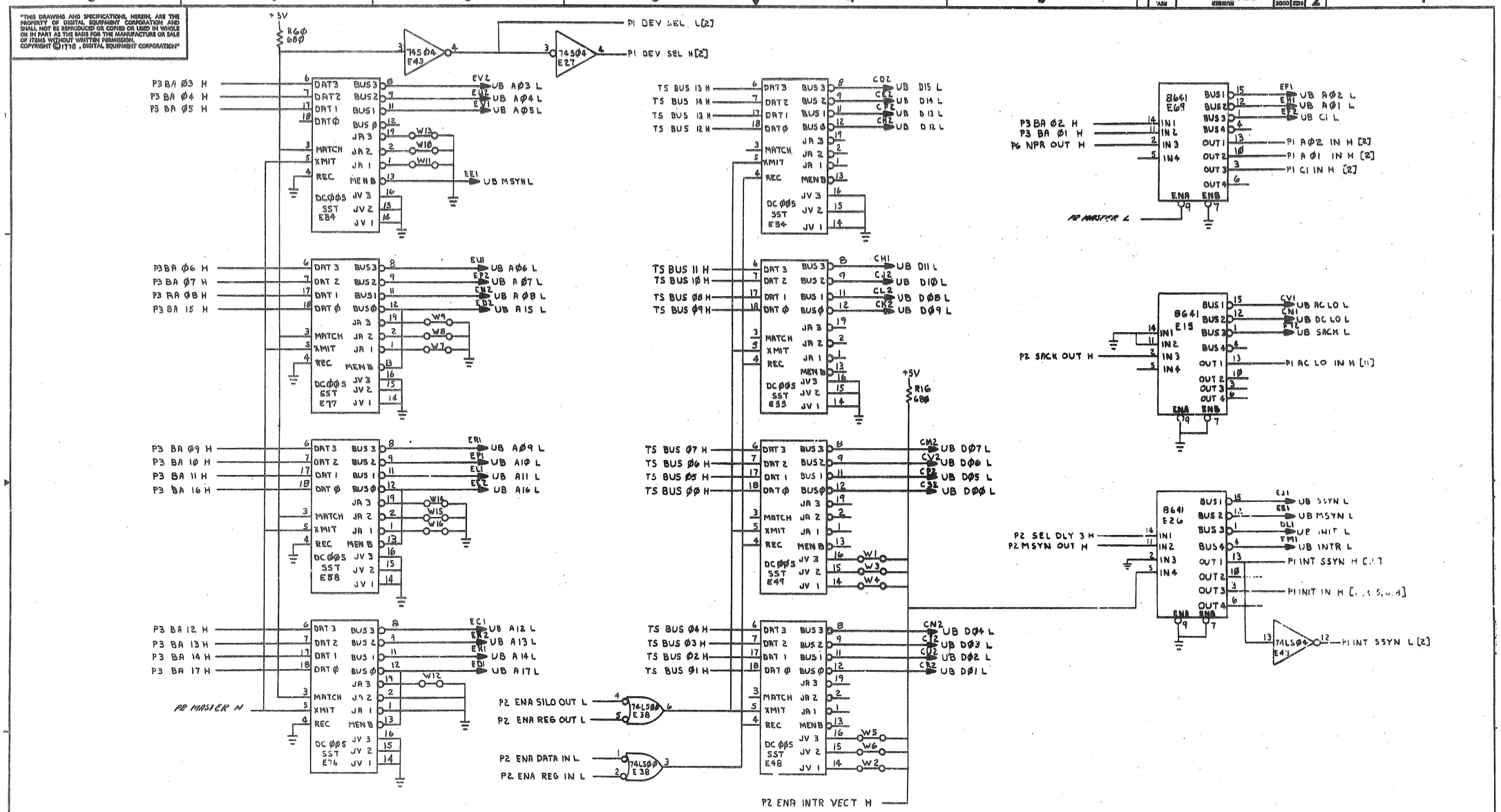

UNIBUS TRANSCEIVERS

REVISIONS			
CHK	CHANGE NO.		REV.
	M7762-00001		E
	M7762-00002		F
	M7762-00003		H

DRN.		
CHK'D		8 Apr 77
ENG.		8 Apr 77
PROJ. ENG.		8 Apr 77
PROD.		8 Apr 77
NEXT HIGHER ASSY.		
SCALE		
SHEET 1 OF 11		

FIRST USED ON: RL11

digital

TITLE: RL11 CONTROLLER (P1)

SIZE	CODE	NUMBER	REV.
D	CS	M7762-Ø-1	1

DIST.

DEC FORM NO. DRD 102-0

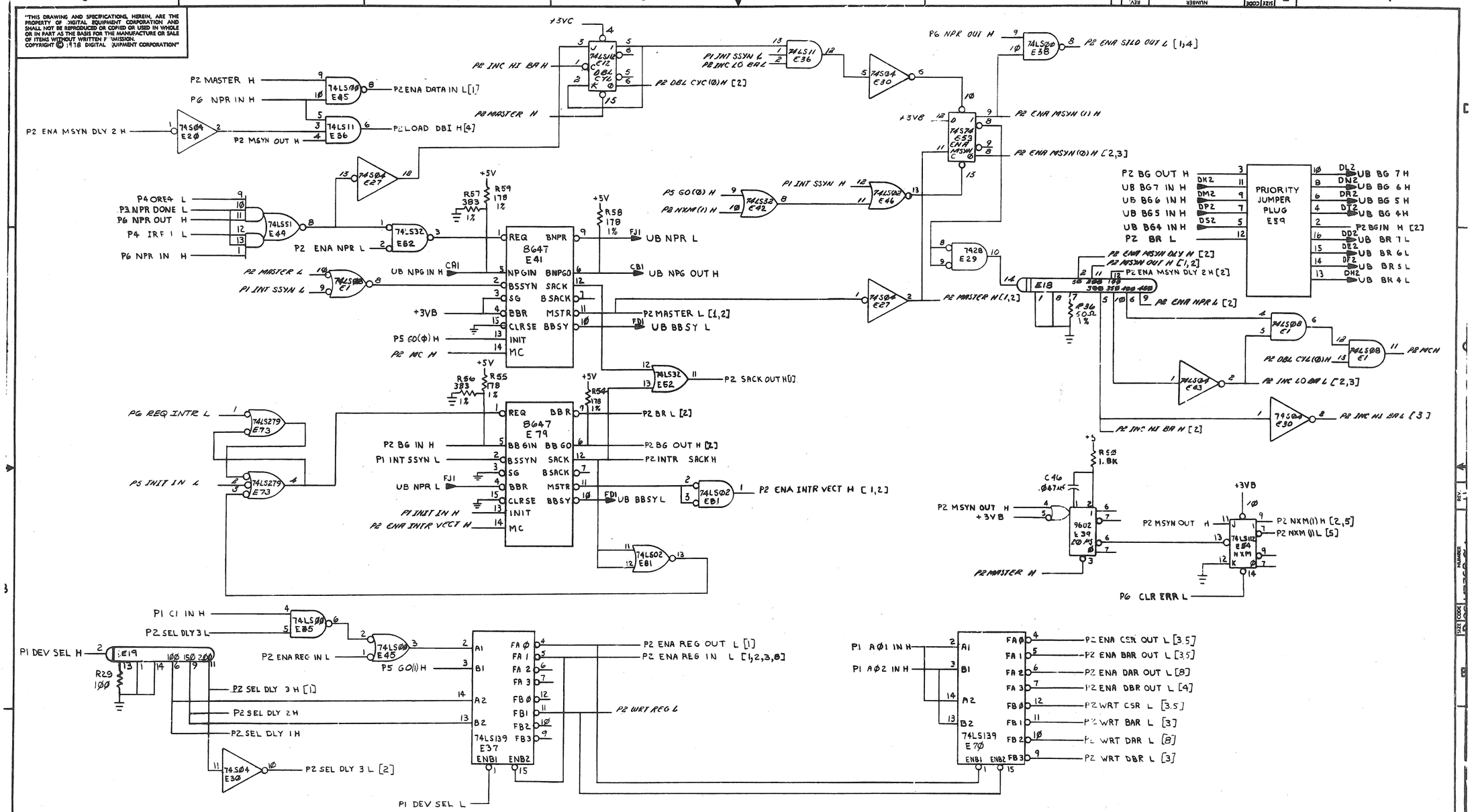

REGISTER DECODE AND NPR CONTROL

REVISIONS		
CHK	CHANGE NO.	REV.

TITLE	SIZE	CODE	NUMBER	REV.
RL11 CONTROLLER (P2)	D	CS	M7762-Ø-1	H
SCALE — SHEET 2 OF 11	DIST.			

DEC FORM NO. DRD 130

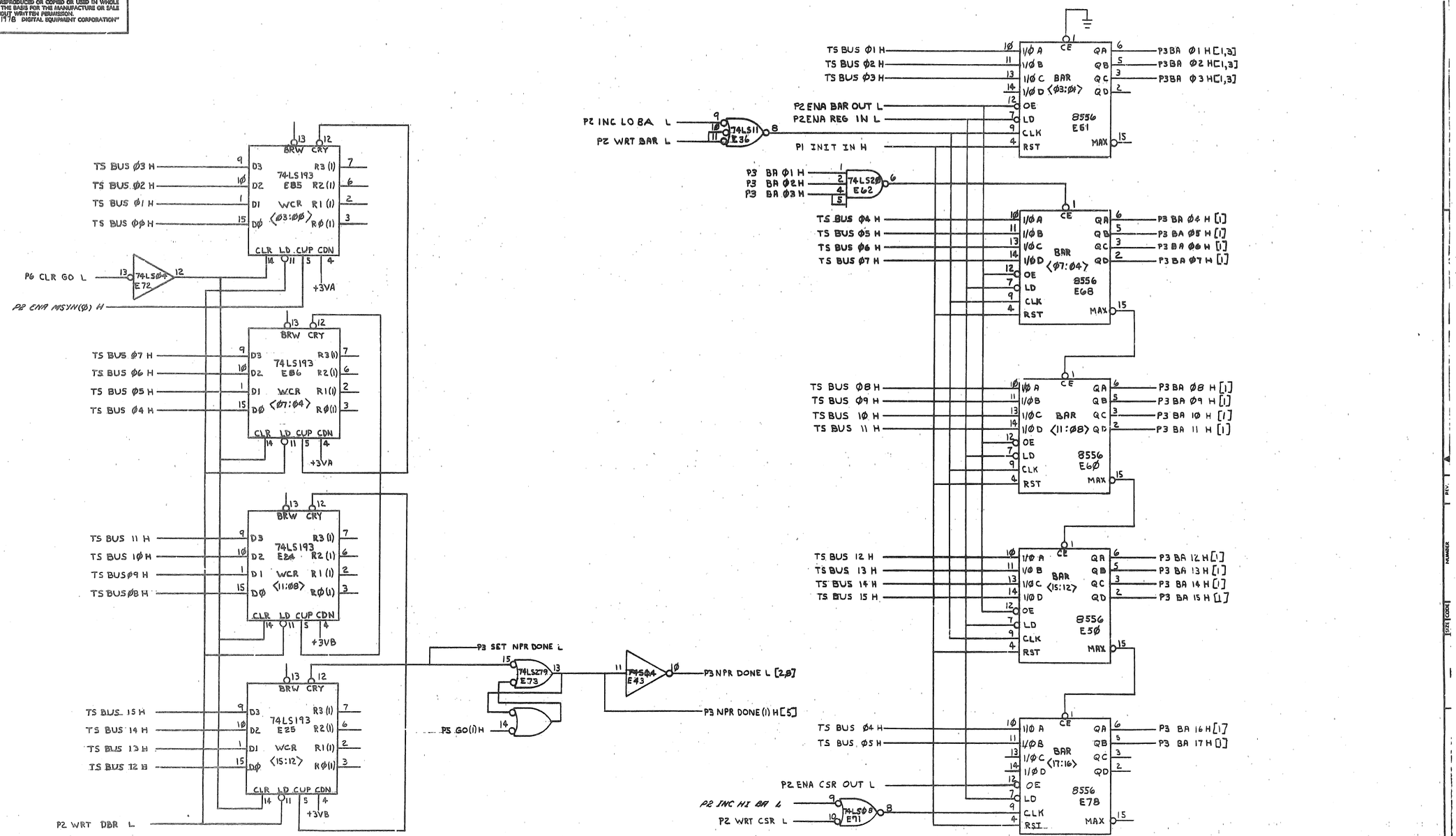

WORD COUNT REGISTER AND BUS ADDRESS REGISTER

REVISIONS		
CHK	CHANGE NO.	REV.

TITLE	SIZE	CODE	NUMBER	REV.
RL11 CONTROLLER (P3)	D	CS	M7762-Ø-1	H
SCALE —	SHEET 3 OF 11		DIST.	

DEC FORM NO. DED 150

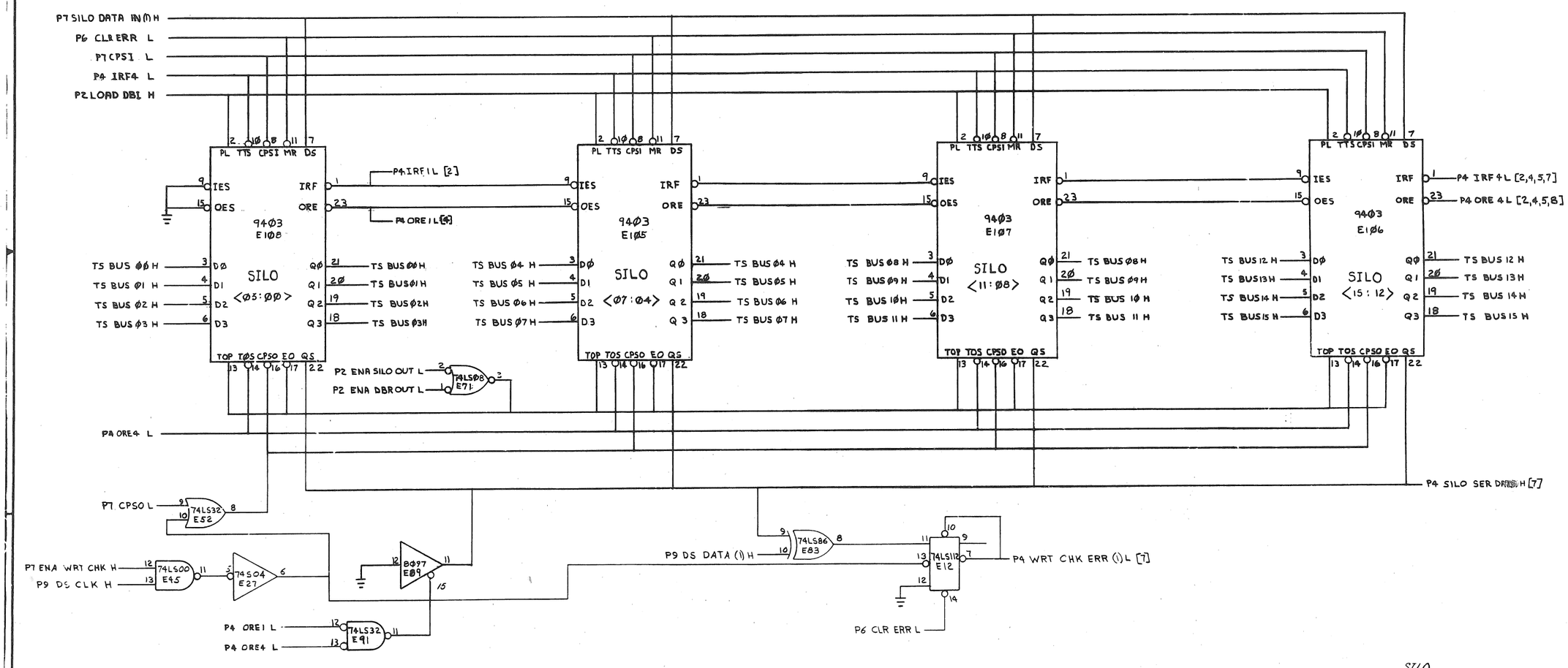

REVISIONS		
CHK	CHANGE NO.	REV.

TITLE	SIZE	CODE	NUMBER	REV.
RL11 CONTROLLER (P4)	D	CS	M7762-Ø-1	H
SCALE —	SHEET 4 OF 11	DIST.		

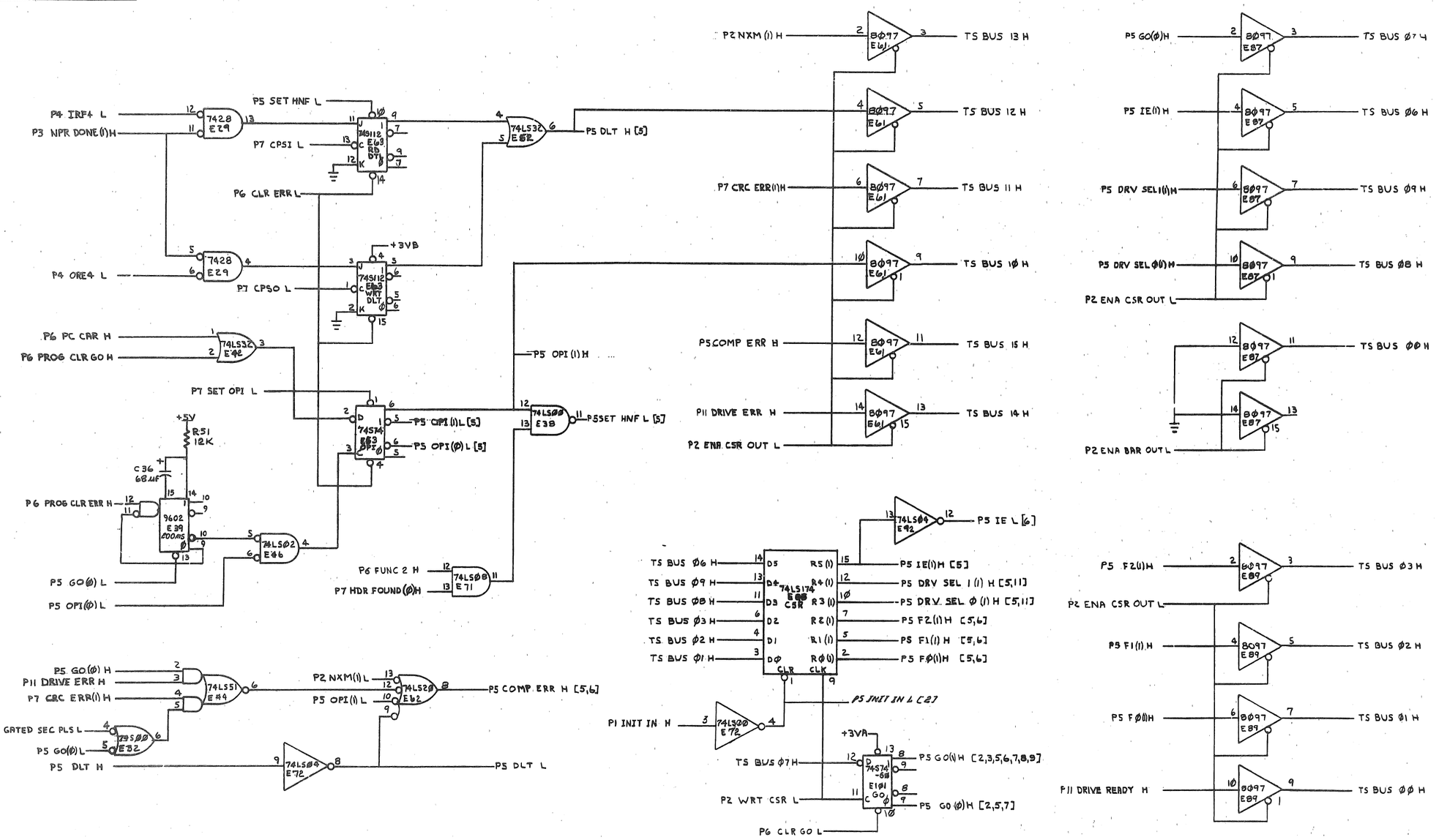

CSR AND ERROR REGISTERS

REVISIONS		
CHI.	CHANGE NO.	REV.

TITLE	SIZE	CODE	NUMBER	REV.
RL11 CONTROLLER (P5)	D	CS	M7762-Ø-1	F
SCALE	SHEET 5 OF 11	DIST.		

DEC FORM NO. ORD 180

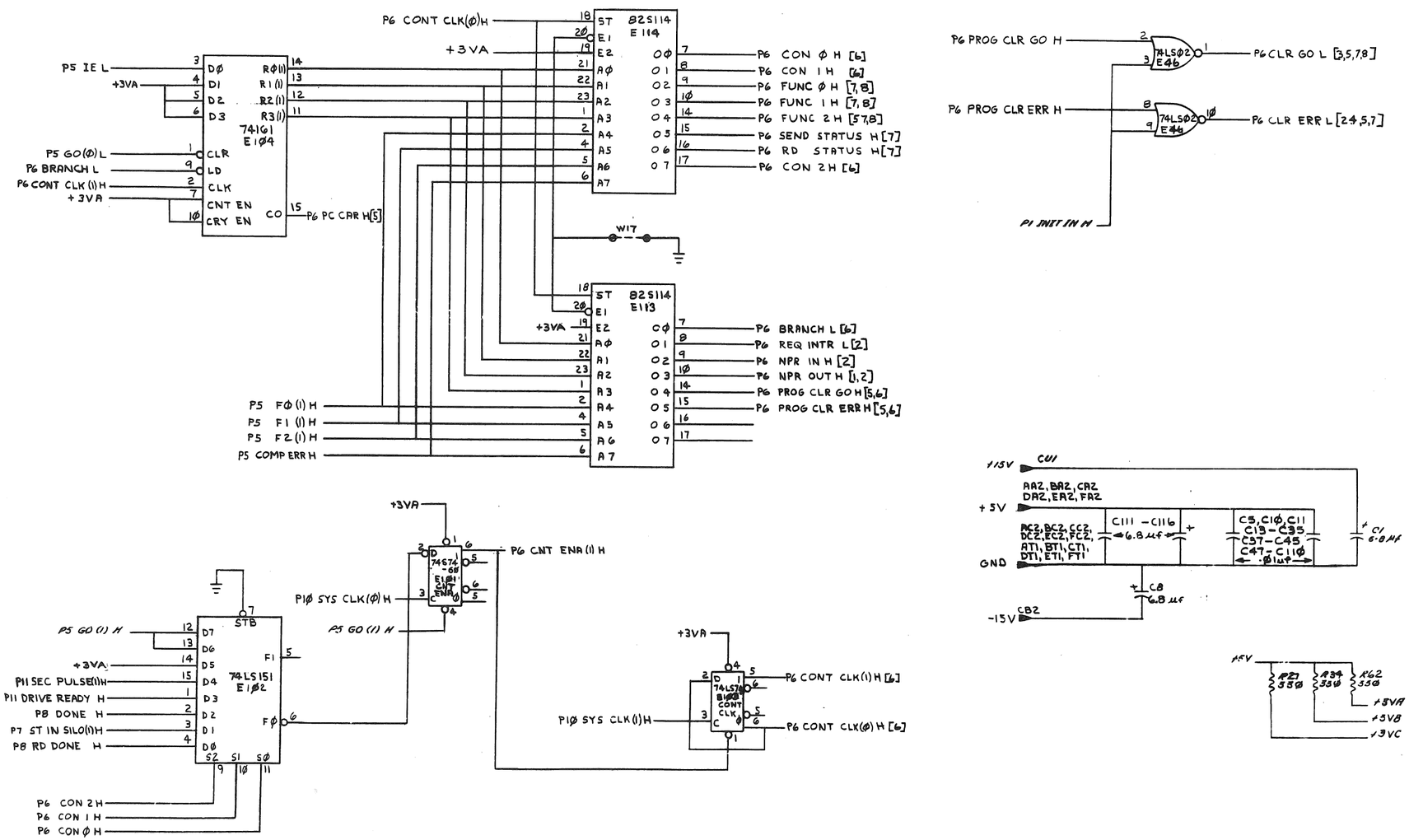

MICRO SEQUENCER FUNCTION CONTROL

REVISIONS		
CHK	CHANGE NO.	REV.

TITLE	SIZE	CODE	NUMBER	REV.
RL11 CONTROLLER (P6)	D	CS	M7762-Ø-1	H
SCALE —	SHEET 6 OF 11	DIST.		

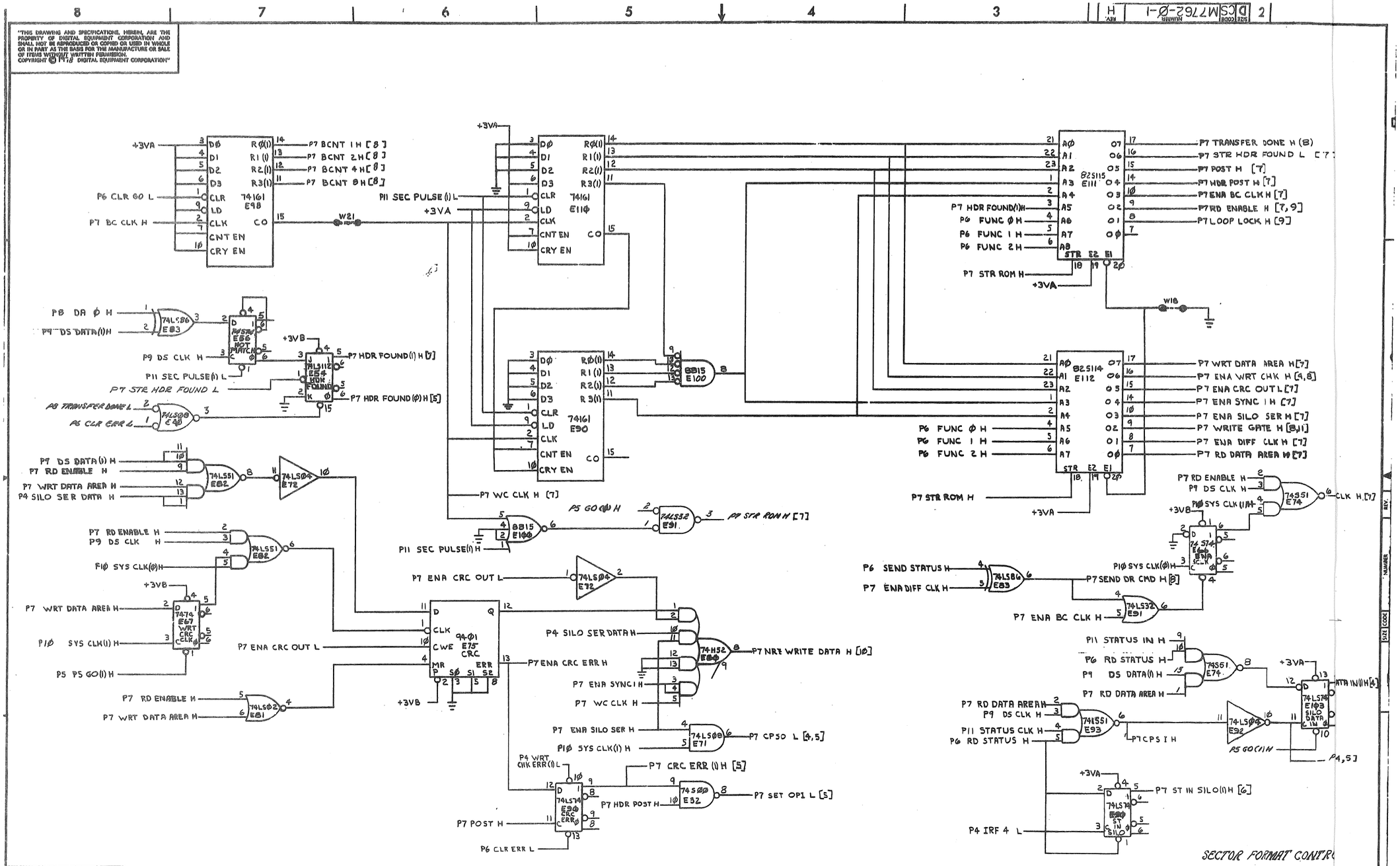

REVISIONS		
CHI.	CHANGE NO.	REV.

TITLE RL11 CONTROLLER (P7)

SIZE D CODE CS NUMBER M7762 REV. H

SCALE — SHEET 7 OF 11 DIST.

DDC FORM NO. DDD 100

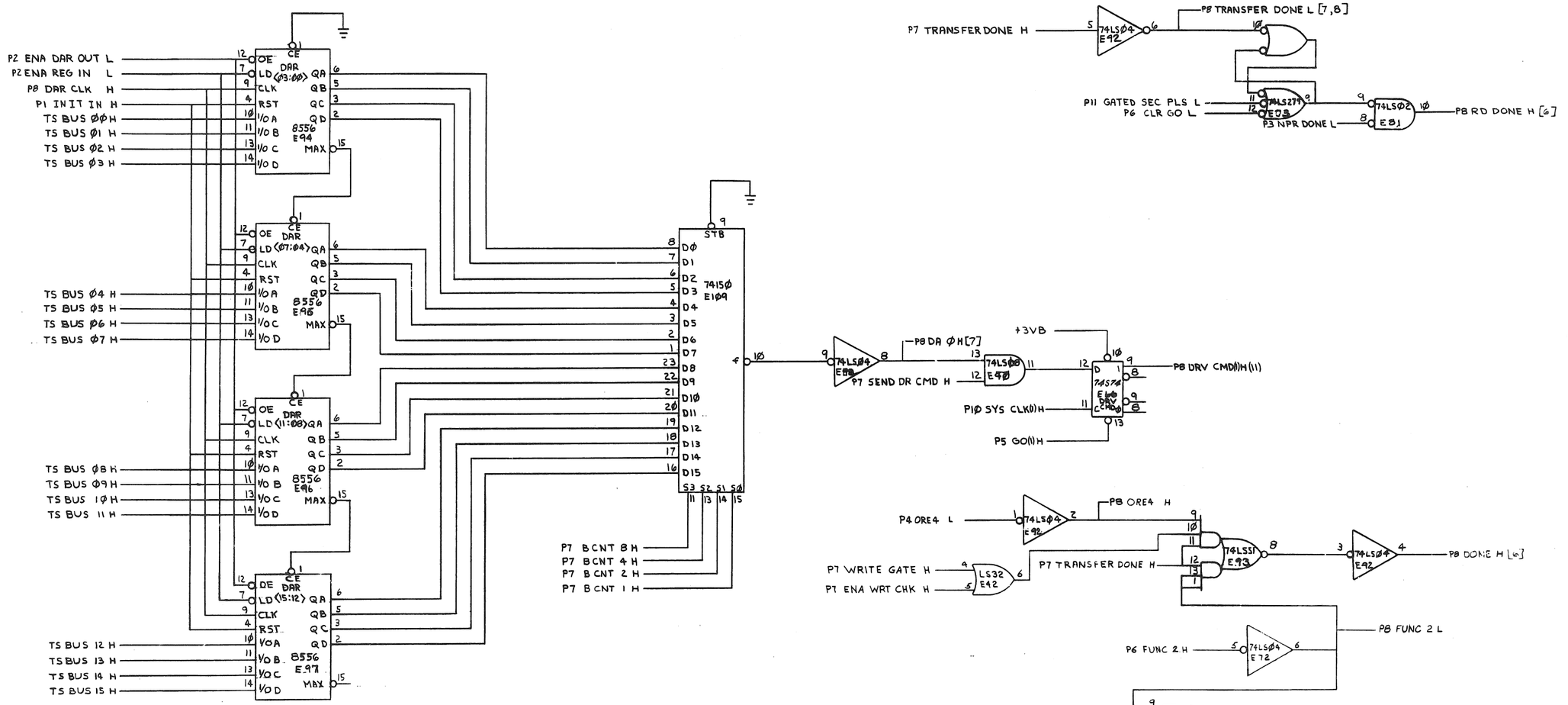

DAR AND DRIVE COMMAND ; FUNCTION TERMINATION

REVISIONS		
CHK	CHANGE NO.	REV.

TITLE	SIZE	CODE	NUMBER	REV.
RLII CONTROLLER (P8)	D	CS	M7762-Ø-1	H
SCALE —	SHEET 8 OF 11		DIST.	

DEC FORM NO. 320 120

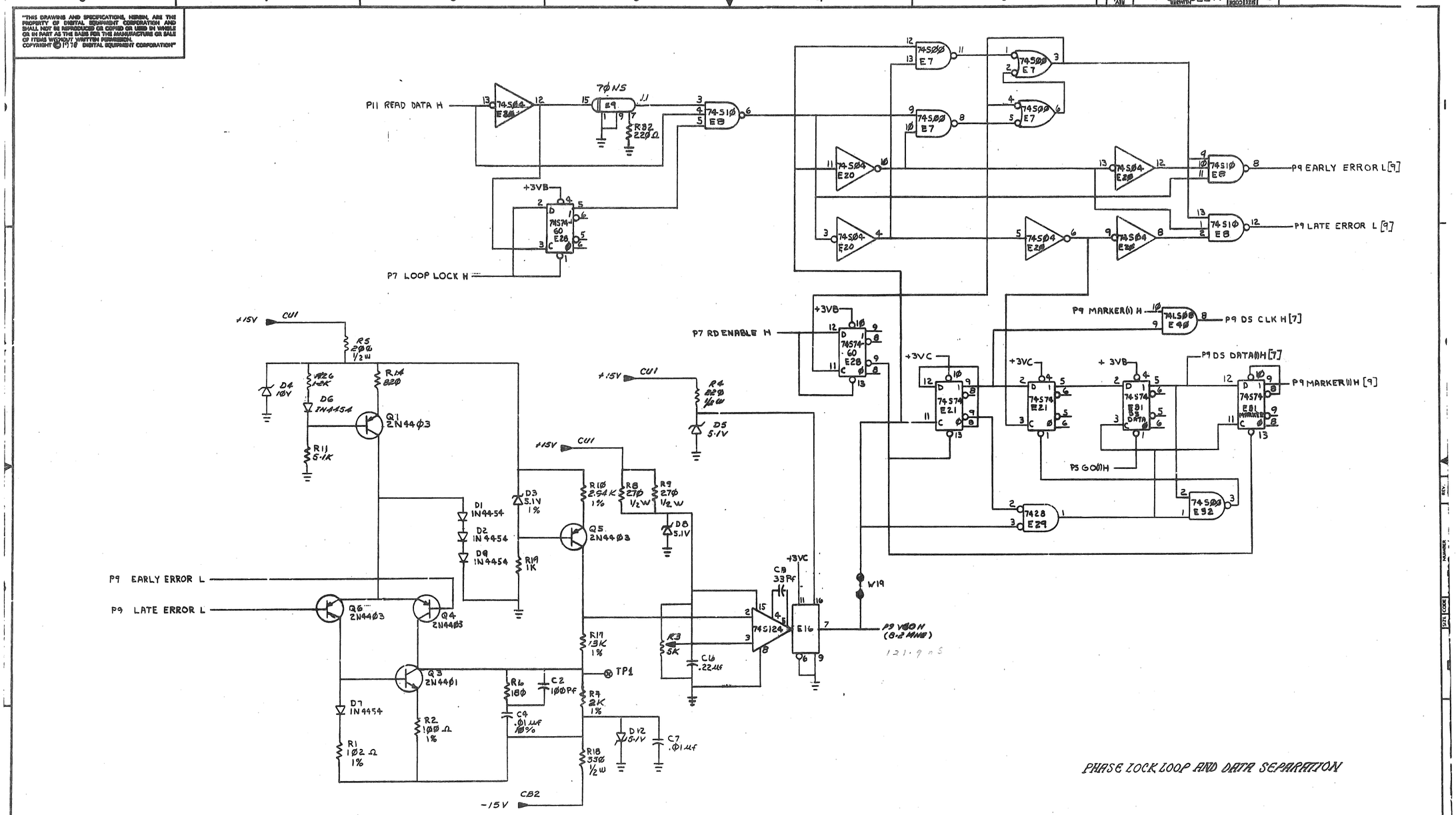

PHASE LOCK LOOP AND DATA SEPARATION

REVISIONS		
CHK	CHANGE NO.	REV.

TITLE	SIZE	CODE	NUMBER	REV.
RL11 CONTROLLER (P9)	D	CS	M7762-0-1	H
SCALE —	SHEET 9 OF 11	DIST.		

DEC FORM NO. DEC 100

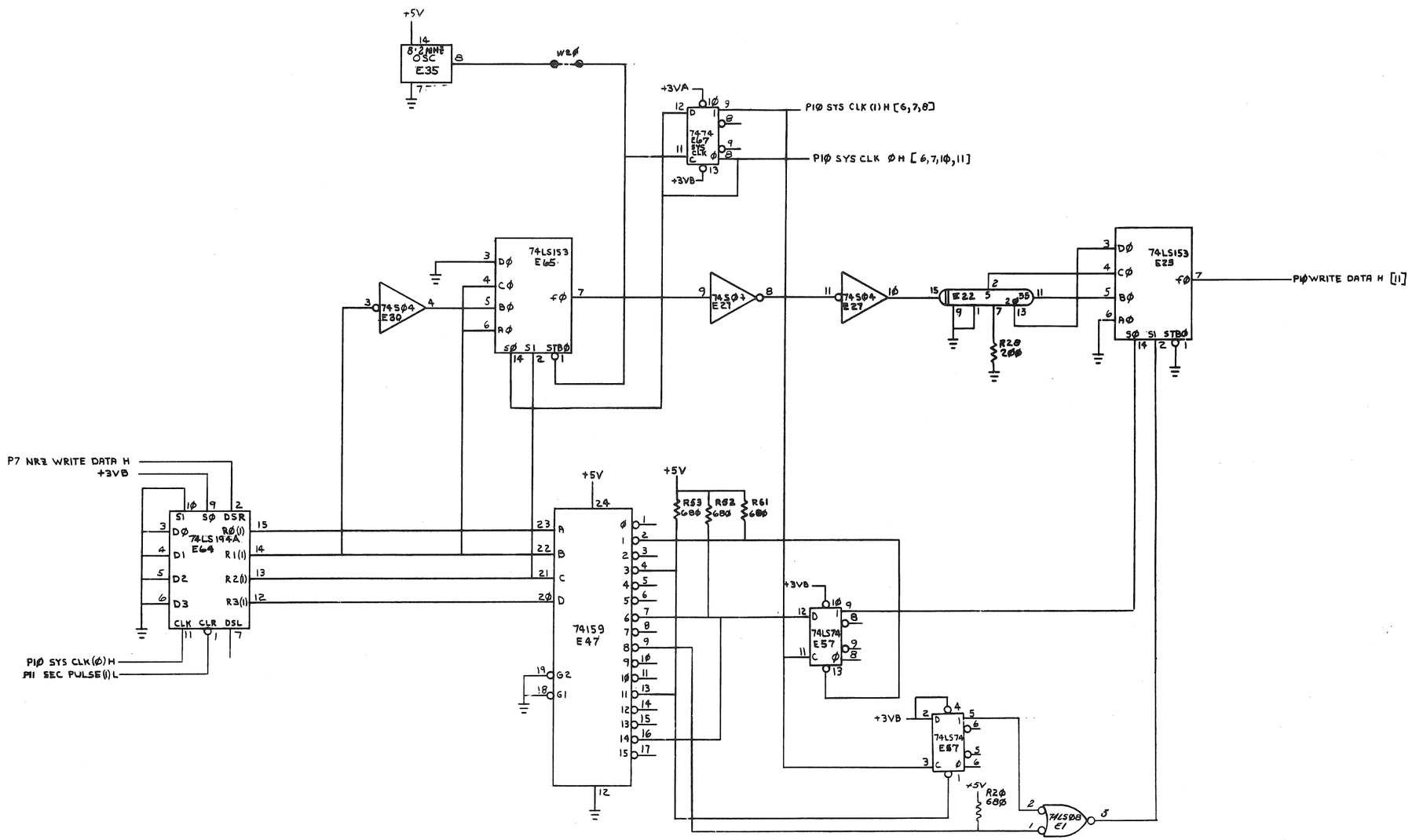

WRITE DATA ENCODE AND PRECOMPENSATION

REVISIONS		
CHK	CHANGE NO.	REV.

TITLE	SIZE	CODE	NUMBER	REV.
RL11 CONTROLLER (PIØ)	D	CS	M7762-Ø-1	H
SCALE —	SHEET 1Ø OF 11	DIST.		

DEC FORM NO. DRD 150

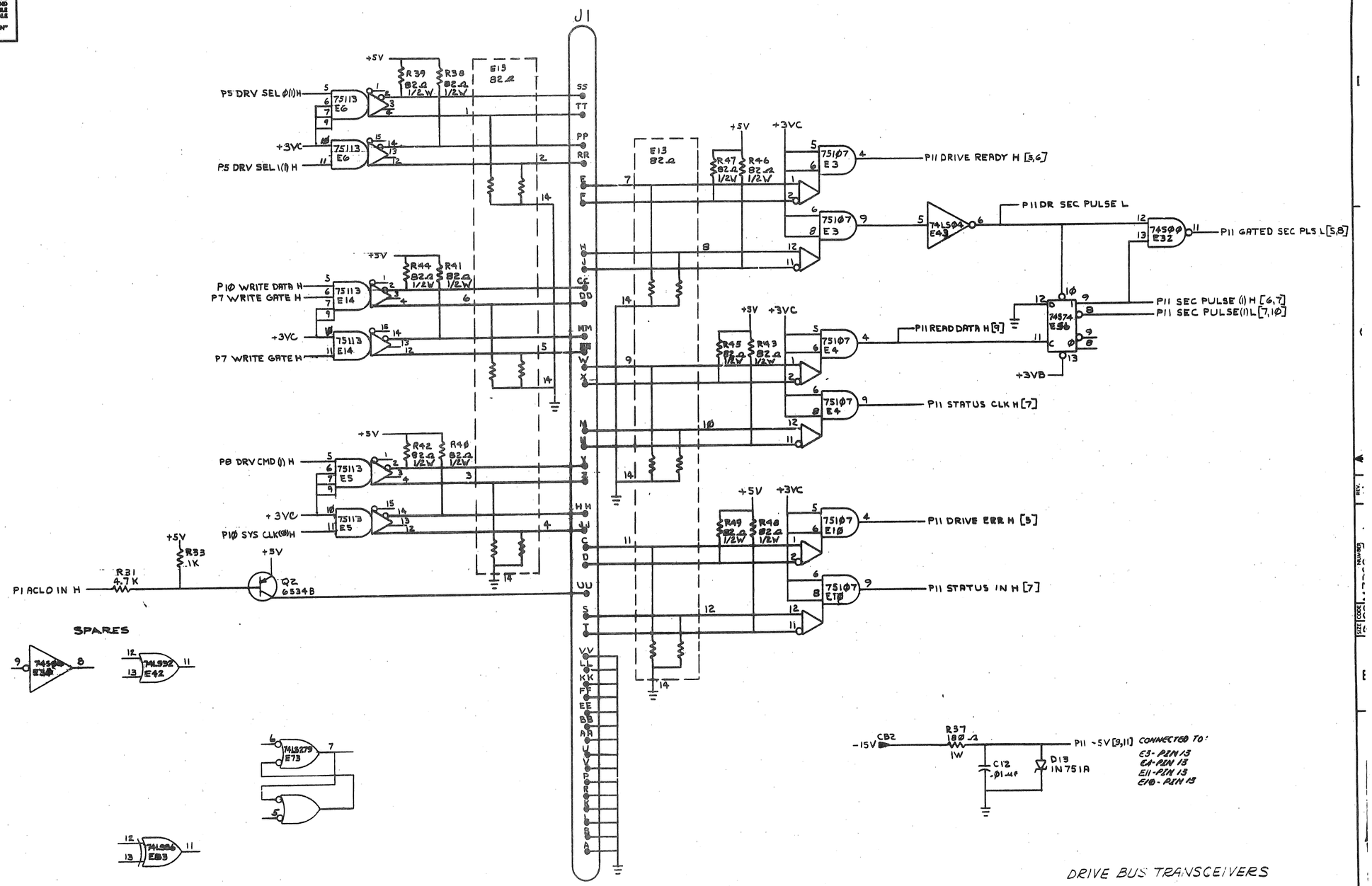

REVISIONS		
CHK	CHANGE NO.	REV.

TITLE	SIZE	CODE	NUMBER	REV.
RL11 CONTROLLER (P11)	D	CS	M7762-Ø-1	H
SCALE —	SHEET 11 OF 11		DIST.	

DEC FORM NO. DOD 130

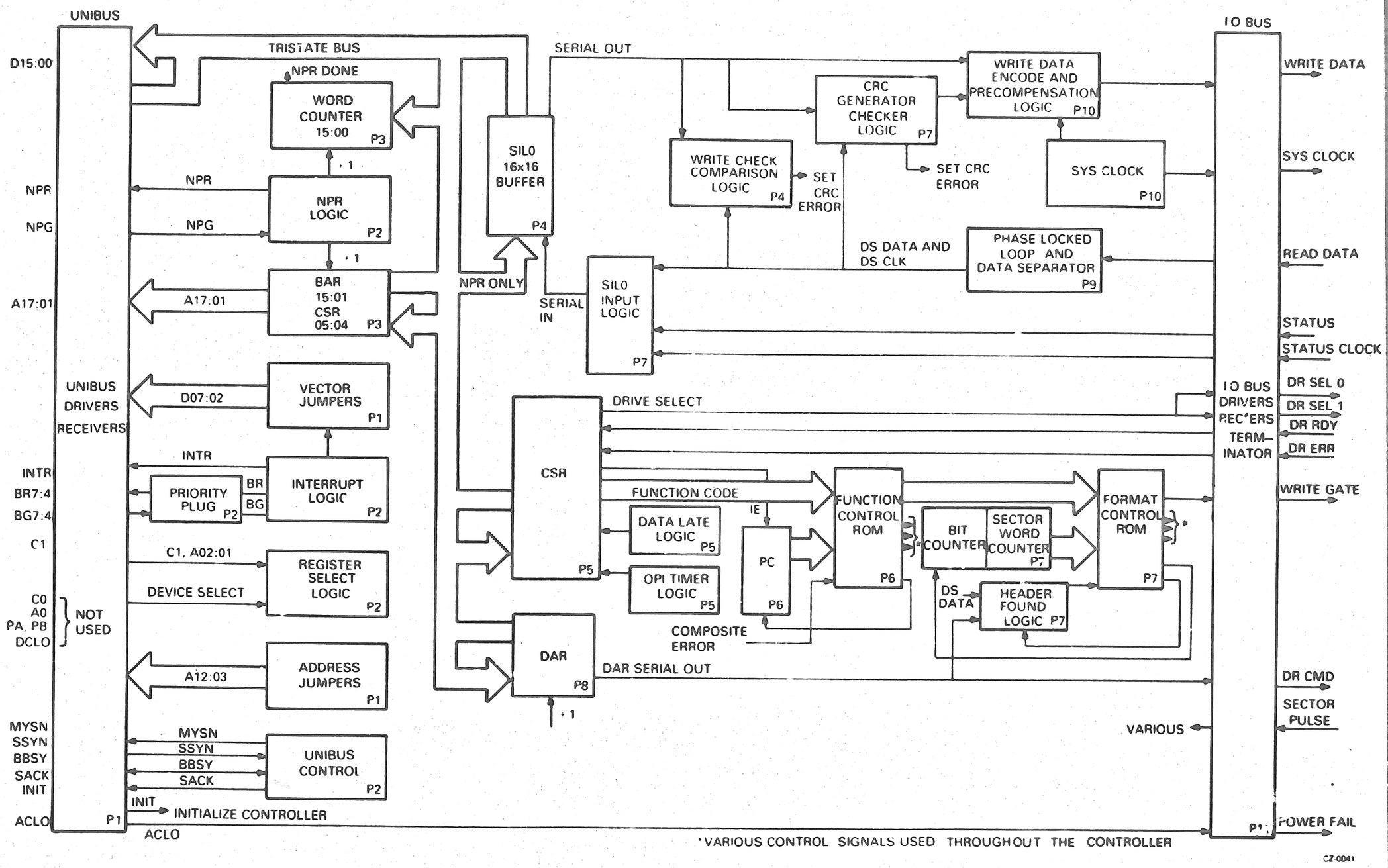

Figure 4-1 RL11 Functional Block Diagram

NOTES:

1. SIGNAL NAMES HAVE THE FORM
   PP NAME X [N]

   PREFIX PP ⇒ UB - UNIBUS SIGNAL LINE
   TS - TRISTATE SIGNAL WITH MORE THAN ONE ORIGIN
   PM - INTERNAL SIGNAL WHOSE ORIGIN IS ON PAGE NUMBER M

   SUFFIX X ⇒ ASSERTED LEVEL OF SIGNAL (H OR L)

   [N] ⇒ APPEARS AT SIGNAL ORIGIN. N IS PAGE NUMBER OF DESTINATION.

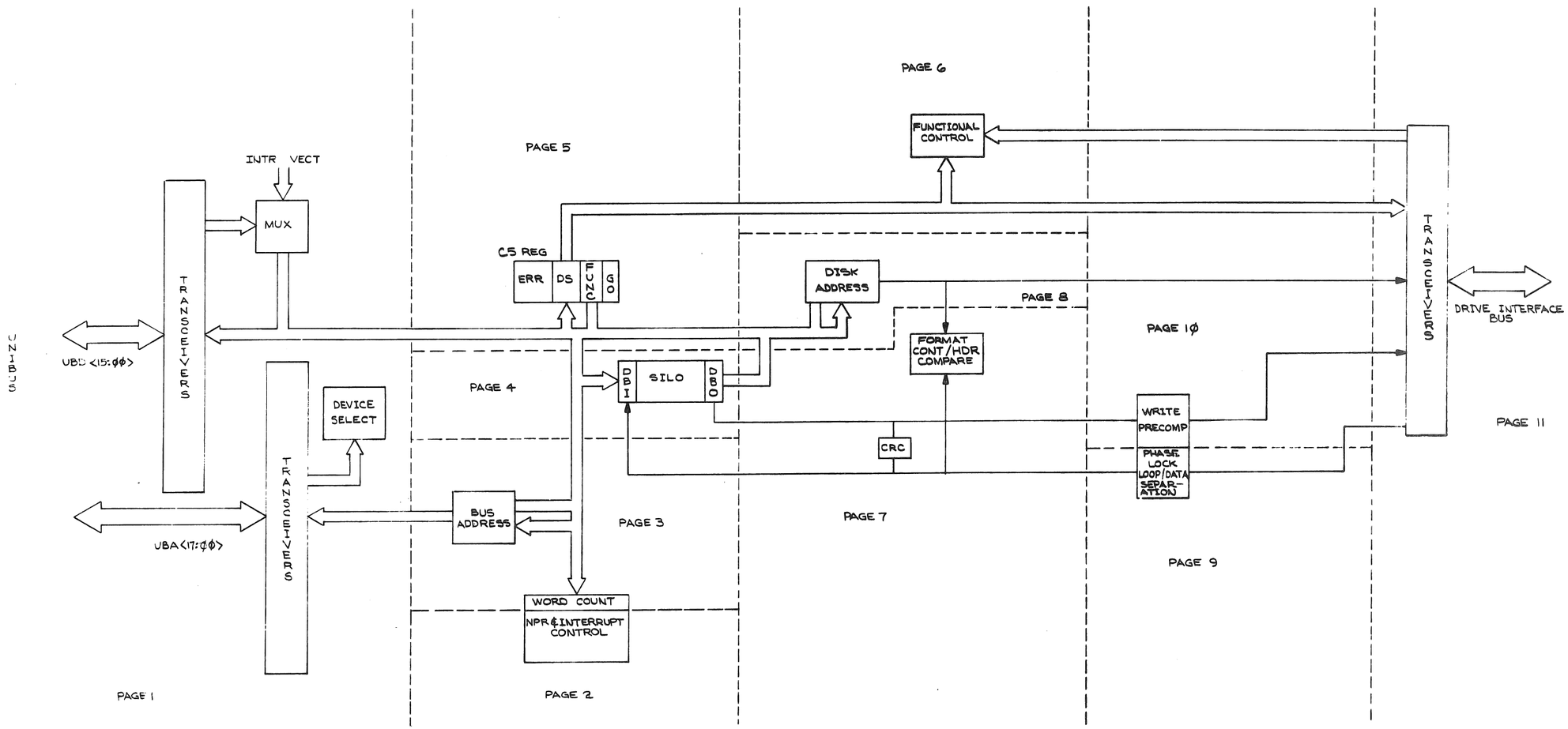

REVISIONS		
CHK.	CHANGE NO.	REV.

DRN.		3/3/77
CHK'D		8 Jun 77
ENG.		8 Jun 77
PROJ. ENG.		3 Dec 77
PROD.		8 Jun 77
NEXT HIGHER ASSY.	B-DD-M7762-Ø	
SCALE		
SHEET 1 OF 1		

FIRST USED ON: RL11

digital

TITLE: RL11 CONTROLLER BLOCK DIAGRAM

SIZE	CODE	NUMBER	REV.
D	BD	M7762-Ø-2	D

DIST.

DEC FORM NO. DRD 102-0

M7762-0-2

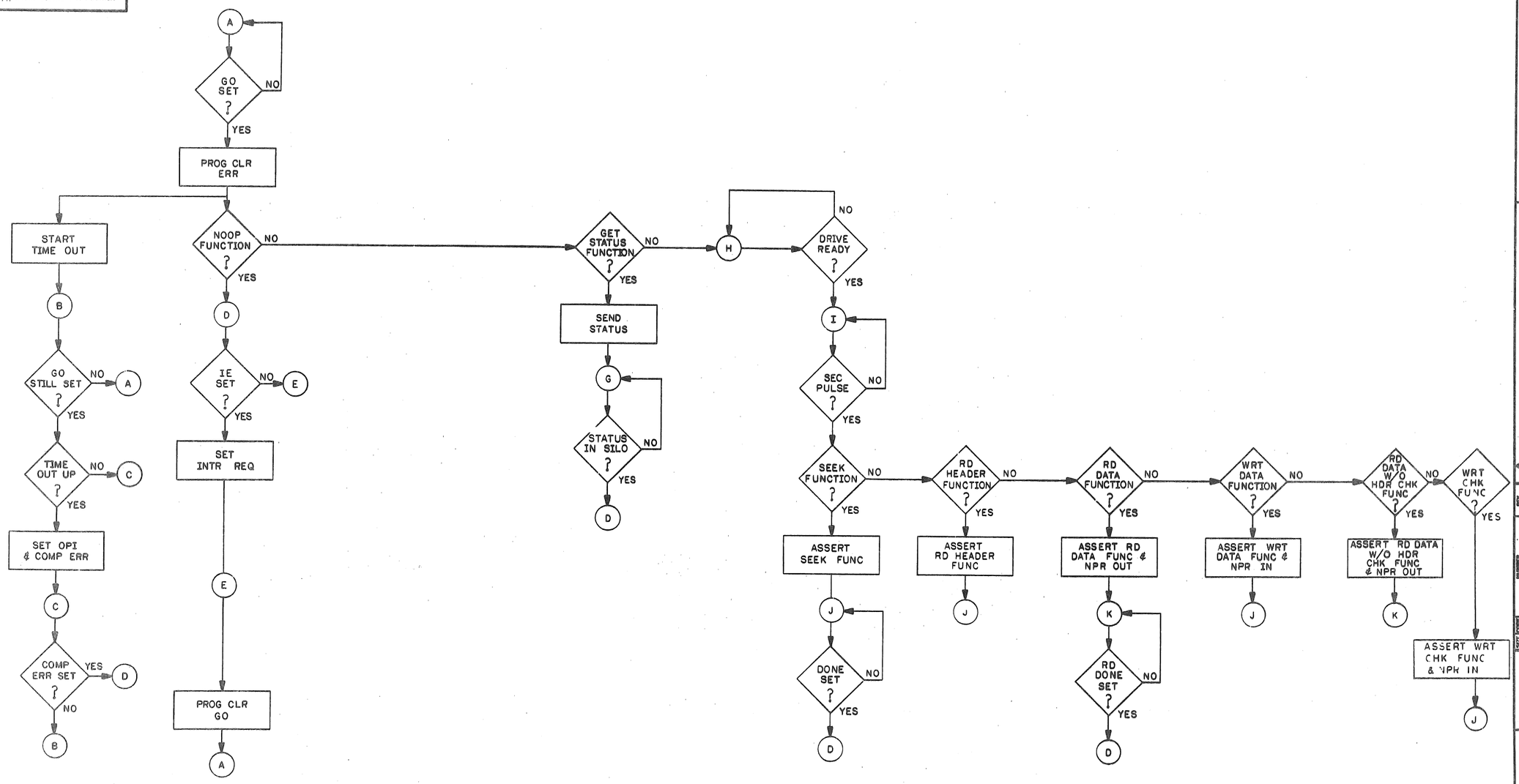

REVISIONS			
CHK	CHANGE NO.	REV.	
Ø	M7762-00001	E	

FUNCTION CONTROL FLOW

DRN.		3-4-77	FIRST USED ON RL11
CHK'D		8 Apr 77	digital
ENG.		8 Apr 77	TITLE RL11 CONTROLLER FLOW DIAGRAM
PROJ. ENG.		8 Apr 77	
PROD.		8 Apr 77	
NEXT HIGHER ASSY.	B-DD-M7762-Ø		
SCALE	—		SIZE D · CODE FD · NUMBER M7762-Ø-3 · REV. E
SHEET	OF 3		DIST.

DEC FORM NO. GSD 1024-D