IT SET

"THIS DRAWING AND SPECIFICATIONS, HEREIN, ARE THE PROPERTY OF DIGITAL EQUIPMENT CORPORATION AND SHALL NOT BE REPRODUCED OR COPIED OR USED IN WHOLE OR IN PART AS THE BASIS FOR THE MANUFACTURE OR SALE OF ITEMS WITHOUT WRITTEN PERMISSION. COPYRIGHT © 1977, DIGITAL EQUIPMENT CORPORATION."

THE PROPERTY
OF
DIGI[redacted]NT
AUS[redacted] PTY. LTD.
NOT [redacted] OR USED WITHOUT
WRITTEN PERMISSION FROM DEA.

UNIT VARIATIONS COVERED BY THIS PRINT SET
RL11

RL11
Field Maintenance
Print Set

Digital Equipment
Corporation
PRINT SET ORDER
NO. MP00153

SED ON OPTION/MODEL	
L11	

DRN. F.CARBERRY	DATE 2 JUN 76	digital
CHK'D	DATE 7 APR 77	TITLE: RL11 CONTROLLER ASSY
PROJ. ENG.	DATE 12 Apr 77	
FIELD SERV.	DATE 12 Apr 77	

SIZE	CODE	NUMBER	REV.
B	TC	RL11-A-1	A

DIST.

SHEET 1 OF 1

THE PROPER
COPYRIGHT
AUSTRALIA
NOT TO BE COPIED OR USED WITHOUT
WRITTEN PERMISSION FROM DFA

"THE MATERIAL HEREIN IS FOR INFORMATION PURPOSES ONLY AND IS SUBJECT TO CHANGE WITHOUT NOTICE. DIGITAL EQUIPMENT CORPORATION ASSUMES NO RESPONSIBILITY FOR ANY ERRORS WHICH MAY APPEAR HEREIN."

FIELD MAINTENANCE PRINT SET

"THIS DRAWING AND SPECIFICATIONS, HEREIN, ARE THE PROPERTY OF DIGITAL EQUIPMENT CORPORATION AND SHALL NOT BE REPRODUCED OR COPIED OR USED IN WHOLE OR IN PART AS THE BASIS FOR THE MANUFACTURE OR SALE OF ITEMS WITHOUT WRITTEN PERMISSION. COPYRIGHT © 1977, DIGITAL EQUIPMENT CORPORATION."

TABLE OF CONTENTS

UNIT VARIATIONS COVERED BY THIS PRINT SET
RL11

THE PROPERTY OF
DIGI[redacted]NT
AUS[redacted] PTY. LTD.
NOT TO BE [redacted] OR USED WITHOUT WRITTEN PERMISSION FROM DEA.

RL11
Field Maintenance
Print Set

Digital Equipment Corporation
PRINT SET ORDER
NO. MPØØ153

REVISIONS		
REV.	A	
CHG. NO.	RL11-AK-C2002 W. MAJOR	
DATE	11-NOV-76	

USED ON OPTION/MODEL	
RL11	

SHEET 1 OF 1

DRN.	F. CARBERRY	DATE 2 JUN 76
CHK'D		DATE 7 APR 77
PROJ. ENG.		DATE 12 Apr 77
FIELD SERV.		DATE 12 Apr 77

digital

TITLE: RL11 CONTROLLER ASSY

SIZE	CODE	NUMBER	REV.
B	TC	RL11-Ø-1	A

DIST.

DRB 124

[redacted]

"THE MATERIAL HEREIN IS FOR INFORMATION PURPOSES ONLY AND IS SUBJECT TO CHANGE WITHOUT NOTICE. DIGITAL EQUIPMENT CORPORATION ASSUMES NO RESPONSIBILITY FOR ANY ERRORS WHICH MAY APPEAR HEREIN."

DRAWING DIRECTORY

"THIS DRAWING AND SPECIFICATIONS, HEREIN, ARE THE PROPERTY OF DIGITAL EQUIPMENT CORPORATION AND SHALL NOT BE REPRODUCED OR COPIED OR USED IN WHOLE OR IN PART AS THE BASIS FOR THE MANUFACTURE OR SALE OF ITEMS WITHOUT WRITTEN PERMISSION. COPYRIGHT © 1976, DIGITAL EQUIPMENT CORPORATION."

NOTE: FOR FIELD MAINTENANCE PRINT SET
SEE MPØØ153

UNIT VARIATIONS

VAR	TITLE

REVISIONS			
REV.	A	B	
CHANGE NO.	RL11-AK-CZØØ2 W. MAJOR	RL11-CXØØ6 K.D.21AJØ81 E.WESTER	
CHK		876	

USED ON OPTION/MODEL	
RL11	
SHEET 1	OF 3

DRN. F. Carberry	DATE 2 JUN 76	TITLE RL11 CONTROLLER ASSY
CHK'D. F. Carberry	DATE 2 JUN 76	digital
PROJ. ENG. D.T. Ellis	DATE 12 APR 77	SIZE B / CODE DD / NUMBER RL11-Ø / REV B
PROD. R J Stutt	DATE 12 Apr 77	DIST.

DRB 106A

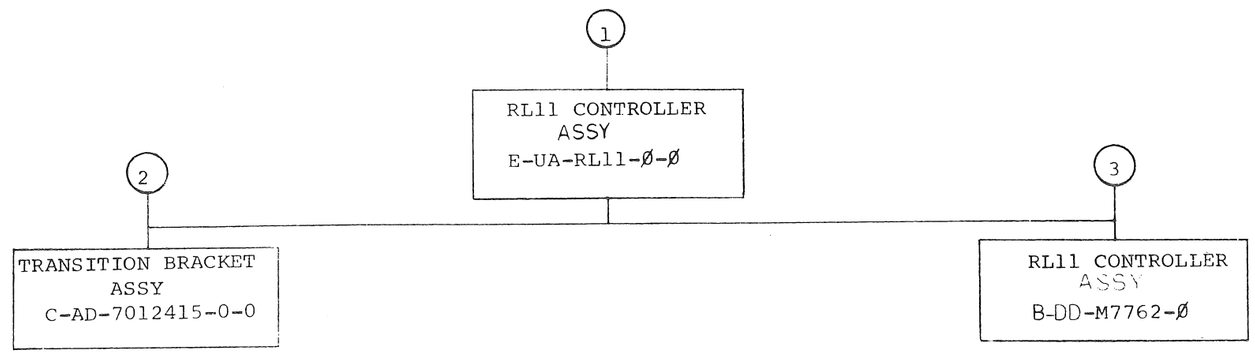

TITLE		SIZE	CODE	NUMBER	REV
RL11 CONTROLLER ASSY	SHEET 2 OF 3	B	DD	RL11-Ø	

DRB 107
EN-1062A-03-(6-81)75-(325)

FIND NO.	DRAWING NO.	DESCRIPTION	TYPE
	B-TC-RL11-Ø-1	TABLE OF CONTENTS	
	A-PL-RL11-Ø	RL11 SHIPPING LIST	
	MP00153	FIELD MAINTENANCE PRINT SET (RL11)	
1	E-UA-RL11-Ø-Ø	RL11 CONTROLLER ASSY	E/M
	A-SP-RL11-Ø-3	RLØ1-PDP11 SUBSYSTEM FUNCTIONAL SPECIFICATION	E/M
	D-IA-7012293-Ø-Ø	TERMINATOR ASSY.	E/M
	D-UA-BCØ6R-Ø-Ø	CABLE ASSY	E
	A-PL-7012938-Ø-Ø	UNIT SELECT PLUG KIT	M
	C-SP-3700341-0-0	PKG CONTROLLERS RLXX	M
2	C-AD-7012415-Ø-Ø	TRANSITION BRKT ASSY	M
	C-IA-7415617-Ø-Ø	TRANSITION BRKT	M
3	B-DD-M7762-Ø	RL11 CONTROLLER	E

FIND NO.	DRAWING NO.	DESCRIPTION	TYPE

TYPE: E ELECTRICAL
M MECHANICAL
E/M ELECTRO/MECHANICAL

digital

TITLE	SHEET	SIZE	CODE	NUMBER	REV
RL11 CONTROLLER ASSY	3 OF 3	B	DD	RL11-Ø	B

DRB 108A

NOTES:

1. TERMINATOR ASSY (ITEM#4) TO BE INSTALLED IN "CABLE OUT" LOCATION IN LAST DRIVE OF SUB-SYSTEM.
2. WHEN INSTALLED IN BASIC OR BASIC-L EXPANSION BOX, BOGGER DC CABLE (ITEM 3) SHOULD BE FOLDED 90° AND ROUTED UP AND OUT OF THE BOX AS SHOWN.
3. WHEN ALTERNATE MOUNTING POSITION IS USED, CONNECTOR IN TRANSITION BRACKET MUST BE INVERTED SO THAT I/O CABLE FROM DRIVE WILL HANG IN A DOWNWARD POSITION AS SHOWN
4. ITEM #3 THRU ITEM#10 ARE NOT ASSEMBLED AT THIS POINT BUT MUST BE SHIPPED WITH UNIT FOR ASSEMBLY AT INSTALLATION.
5. PRIORITY JUMPER ASSY (ITEM#1) TO BE PLUGGED INTO M7762 AT FINAL ASSY
6. THE RL11 MODULE (M7762) WILL OCCUPY ONE HEX SPC SLOT.
7. JUMPER WIRE FROM CA1 TO CB1 ON THE SPC BACKPLANE MUST BE REMOVED AT INSTALLATION.
8. STRIPED EDGE OF CABLE MUST BE LOCATED AT PIN 1 SIDE OF CONNECTOR ON M7762.
9. THIS OPTION SHALL NOT HAVE A SERIAL NUMBER APPLIED TO IT.

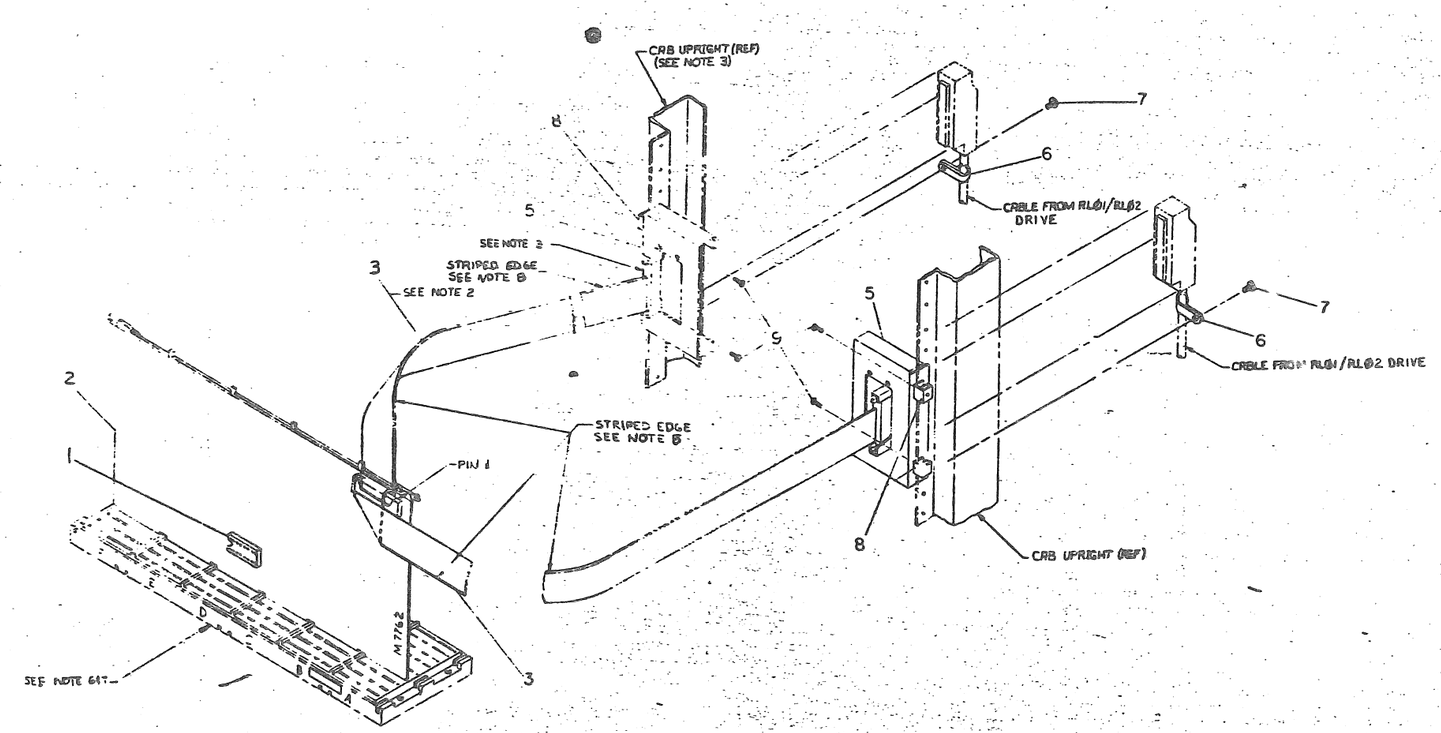

CAUTION: OFF SHEET PARTS LIST EXISTS.
SEE K-PL-RL11-0-DBP (Z0976)

TITLE	RL11 CONTROLLER ASSY
	K-DBP
	RL11
	K-RL11-0
	RL11-0-0
	SEE PARTS LIST

"THIS DRAWING AND SPECIFICATIONS, HEREIN, ARE THE PROPERTY OF DIGITAL EQUIPMENT CORPORATION AND SHALL NOT BE REPRODUCED OR COPIED OR USED IN WHOLE OR IN PART AS THE BASIS FOR THE MANUFACTURE OR SALE OF ITEMS WITHOUT WRITTEN PERMISSION.
COPYRIGHT © 1975, DIGITAL EQUIPMENT CORPORATION"

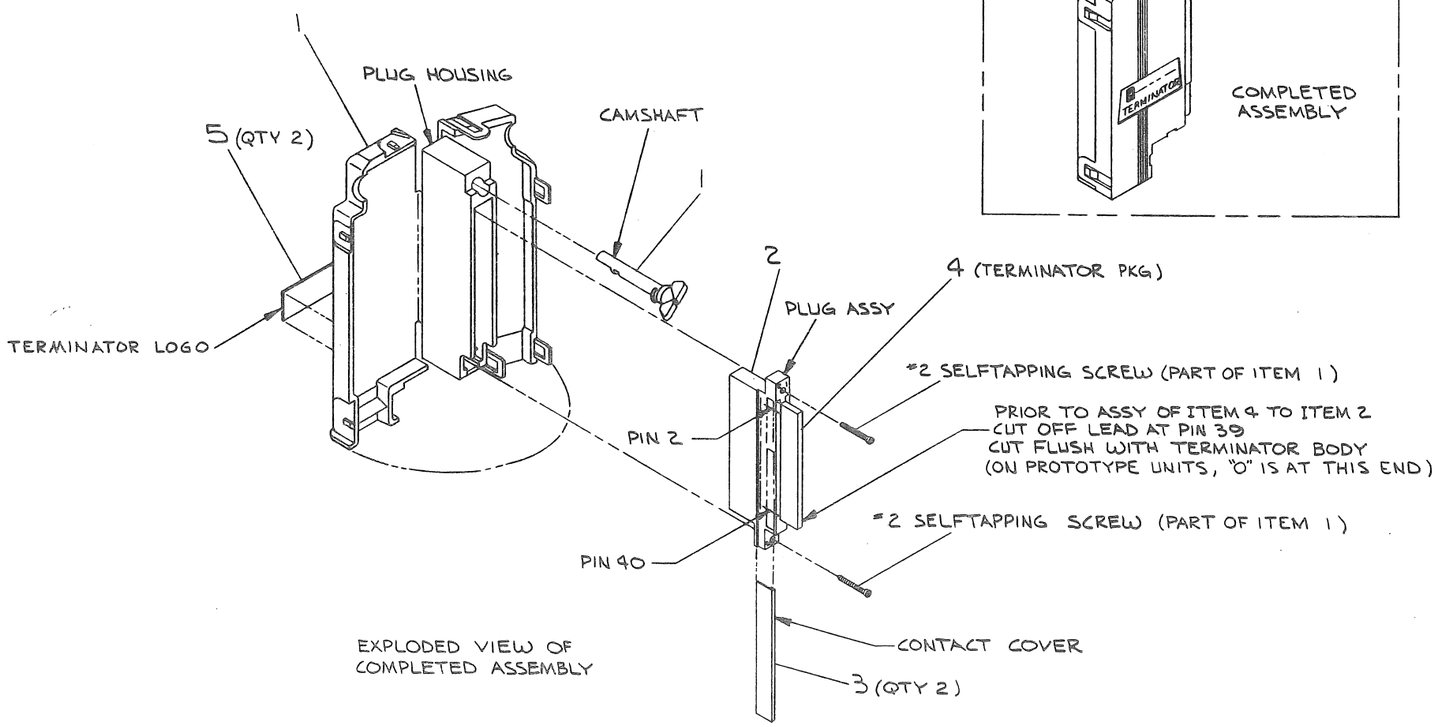

EXPLODED VIEW OF
COMPLETED ASSEMBLY

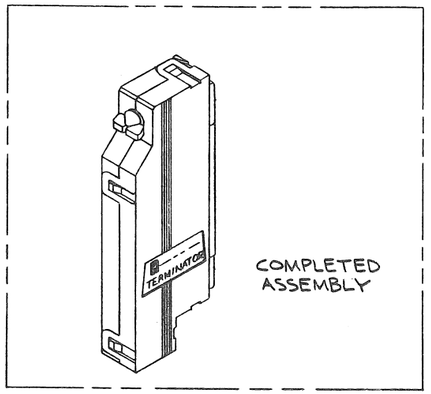

COMPLETED
ASSEMBLY

ITEM NO.	DESCRIPTION	DWG./PART NO.	QTY
2	LOGO, TERMINATOR	A-DC-7416678-0-0	5
1	TERMINATOR PKG	1313242-00	4
2	COVER, CONTACT	1211591-11	3
1	PLUG ASSY	1211591-07	2
1	CONN PLUG HSG & CAMSHAFT KIT	1211591-34	1

UNLESS OTHERWISE SPECIFIED DIMENSIONS ARE IN INCHES

ANGLES ±0° 30'	CLASS OF ACCURACY (CHECK ONE)	NOMINAL DIMENSION RANGE INCHES					
		OVER 0 TO 0.2	OVER 0.2 TO 1.2	OVER 1.2 TO 4.0	OVER 4.0 TO 12.0	OVER 12.0 TO 40.0	OVER 40.0 TO 80.0
SURFACE QUALITY IN MICROINCHES	MEDIUM ☐	±.004	±.008	±.012	±.016	±.024	±.04
	PREFERRED ☐	±.012	±.016	±.025	±.04	±.063	±0.1

7012293-0

QUANTITY & VARIATION

THIRD ANGLE PROJECTION

REMOVE BURRS AND BREAK SHARP CORNERS

DO NOT SCALE DWG

MATERIAL: SEE PARTS LIST

FINISH: —

DRN: D. Cooper 7-JAN-76
CHK'D: W. Mann 26-Apr-76
ENG: Walt Dukes 20-Apr-76
PROJ. ENG: [illegible] 5-10-76
PROD.: [illegible] 6/1/76

NEXT HIGHER ASSY.: E-UA-RK611-Φ-Φ

SCALE: NONE

SHEET 1 OF 1

FIRST USED ON: RKΦ6

digital

TITLE: TERMINATOR ASSY

SIZE	CODE	NUMBER	REV.
D	IA	7012293-0-0	A

DIST.

CHK	CHANGE NO.	REV.
JC	7012293-00001	A

REVISIONS

P. Jones 20 SEP 76
W. DUNHAM 9/29/76

B.A.D. P-2167

SIZE	CODE	NUMBER	REV.
B	DD	M7762-Ø	P

DRAWING NO.	NO. OF SHTS.	PART NO.	DESCRIPTION	REVISIONS															
											*	*					RPM 8MAY80	RPM 23MAY80	RPM 20NOV80
		M7762	RL11 CONTROLLER	*	A	B	C	B1	D	E	F	F	H	J	K	L	M	N	P
D-UA-M7762-0-0	2		RL11 CONTROLLER	D	E	F	H	F1	J	K	J1	L	M	M	N	P	P	P	R
D-CS-M7762-0-1	11		RL11 CONTROLLER	D	E	F	H	F1	J	K	J1	L	M	M	N	P	P	P	R
D-BD-M7762-0-2	1		RL11 CONTROLLER BLOCK DIAGRAM	D	D	D	D	D	D	D	D	D	D	D	D	D	D	D	D
D-FD-M7762-0-3	3		RL11 CONTROLLER FLOW DIAGRAM	D	E	E	E	E	E	E	E	E	E	E	E	E	E	E	E
D-TD-M7762-0-4	13		RL11 CONTROLLER TIMING DIAGRAM	D	E	F	F	F	F	F	F	F	F	F	F	F	F	F	F
K-PL-M7762-0-DBP	4		RL11 CONTROLLER	D	E	F	H	F1	J	K	J1	K	L	L	L	L	M	M	N
K-PC-M7762-0-DBC	-		PC DESIGN DATA BASE	E	E	E	F	E	E	H	E	H	H	H	H	H	H	H	H
		5012167-00	PC BOARD	E	E	E	F	E	E	H	E	H	H	H	H	H	H	H	H
D-MD-5012167-0-0	5		DRILL AND ETCH DRAWING	D	D	D	E	D	D	F	D	F	F	F	F	F	F	F	F
D-EC-5012167-0-0	2		ETCH CUT DRAWING	-	-	-	-	-	-	-	-	-	-	-	-	A	A	A	B

NOTES:

* REV F FOR B-DD-M7762-0 WAS ASSIGNED FOR BOTH ECO M7762-CZ007 and M7762-CZ008.

723

REVISIONS			
REV.	CHG NO.	DATE	
-	ORIG	SEPT 77	
A	M7762-00001	NOV 77	
B	M7762-0002	FEB 78	
C	M7762-00003	2 MAR 78	
B1	M7762-CZ004	27APR 78	
D	M7762-CZ005	16JUN 78	
E	M7762-CZ006	3 AUG 78	
F	M7762-CZ007	7 AUG 78	
F	M7762-CZ008	9 AUG 78	
H	M7762-CZ009	24AUG 78	
J	M7762-CZ010	25JAN 79	
K	M7762-CZ011	29MAR 80	
L	M7762-CX012	23MAY 80	
M	M7762-CX013	18NOV 80	
N	M7762-CX014	5JAN 82	
P	M7762-CX15		

"THIS DRAWING AND SPECIFICATIONS, HEREIN, ARE THE PROPERTY OF DIGITAL EQUIPMENT CORPORATION AND SHALL NOT BE REPRODUCED OR COPIED OR USED IN WHOLE OR IN PART AS THE BASIS FOR THE MANUFACTURE OR SALE OF ITEMS WITHOUT WRITTEN PERMISSION.

COPYRIGHT© 1980 DIGITAL EQUIPMENT CORPORATION

digital

USED ON OPTION/MODEL	
RL11	

DRN.	D. MAYUSKI	2 Mar 77
CHK'D	P. BOSSMAN	8 Apr 77
ENG.	C. LIU	8 Apr 77
PROD.	R. STROTT	8 Apr 77

TITLE: RL11 CONTROLLER

SIZE	CODE	NUMBER	REV.
B	DD	M7762-Ø	P

SHEET 1 OF 1

THIS DRAWING AND SPECIFICATIONS, HEREIN, ARE THE PROPERTY OF DIGITAL EQUIPMENT CORPORATION AND SHALL NOT BE REPRODUCED OR COPIED OR USED IN WHOLE OR IN PART AS THE BASIS FOR THE MANUFACTURE OR SALE OF ITEMS WITHOUT WRITTEN PERMISSION.
COPYRIGHT © 1978, DIGITAL EQUIPMENT CORPORATION

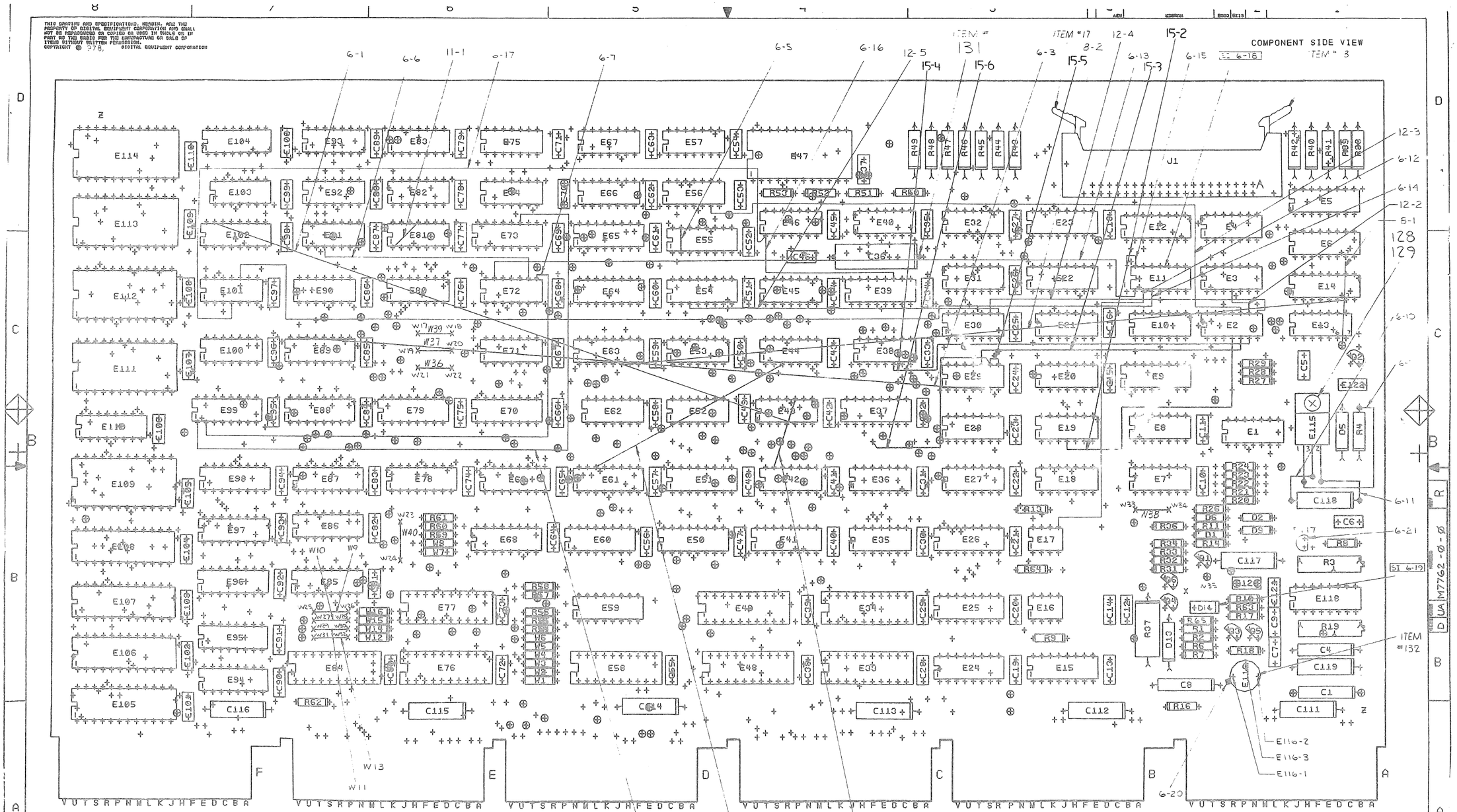

NOTES:
1. R21, R22, R23, R24, ARE SPARE LOCATIONS

REV	CHANGE NO	CHK	
K	REVISED REDRAWN		
L	C2008 G. DONOVAN	M7762-	
M	C2009 M. BROWN	M7762-	
N	C2011 J. VAGIAS	M7762-	
P	CX012 M. BROWN	M7762-	
R	REVISED PER ECO M7762-CX015 L.B. 3DEC81 MANDRACCIA	M7762-	

ETCH REV. H
P.C. DESIGN DATA BASE REV. H

SIGNATURES	DATE
DRN. J. RICHARD	5-25-78
CHK'D.	
ENG.	8/3/78
PROJ. ENG.	7/11/78
PROD.	
SCALE 2/1	
SHT. 1 OF 2	

digital

TITLE RLII CONTROLLER

SIZE	CODE	NUMBER	REV
D	UA	M7762-0-0	R

NEXT HIGHER ASSY. B-DD-M7762-0

"THIS DRAWING AND SPECIFICATIONS, HEREIN, ARE THE PROPERTY OF DIGITAL EQUIPMENT CORPORATION AND SHALL NOT BE REPRODUCED OR COPIED OR USED IN WHOLE OR IN PART AS THE BASIS FOR THE MANUFACTURE OR SALE OF ITEMS WITHOUT WRITTEN PERMISSION.
COPYRIGHT © 1980 DIGITAL EQUIPMENT CORPORATION"

REWORK INSTRUCTIONS

REFER TO D-EC-5012167-0-0 FOR ETCH CUTS.

ECO M7762-CZØØ6

WIRE ADDS SIDE 1:

6-1 E43 PIN 5 TO E102 PIN 15.
6-2 E42 PIN 13 TO E43 PIN 10.
6-3 E29 PIN 6 TO E89 PIN 15.
6-4 E61 PIN 14 TO E44 PIN 3.
6-5 E55 PIN 2 TO E55 PIN 15.
6-6 E91 PIN 3 TO E72 PIN 9.
6-7 E72 PIN 8 TO E99 PIN 2.
6-8 E99 PIN 1 TO E73 PIN 11.
6-9 E115 PIN 1 TO TOP OF R4.
6-10 E115 PIN 3 TO GROUND SIDE (LEFT) OF C118.
6-11 E115 PIN 2 TO POSITIVE SIDE (RIGHT) OF C118.
6-12 E11 PIN 2 TO E17 PIN 5.
6-13 E11 PIN 1 TO E72 PIN 13.
6-14 E11 PIN 3 TO E101 PIN 10.
6-15 E11 PIN 14 TO PIN 16 OF E11 LOCATION.
6-16 E46 PIN 1 TO E39 PIN 11.
6-17 E46 PIN 1 TO E101 PIN 4.

SPECIAL INSTRUCTIONS:

6-18 INSTALLATION OF E11 MUST BE MADE SO PIN 1 OF IC (74S32) IS AT PIN 2 OF E11 LOCATION.
6-19 D14 MUST BE HAND INSERTED DUE TO HOLE SPACING IN BOARD. NOTE ORIENTATION MARK ON D14.

COMPONENT ADDS:

6-20 FOR PROPER INSTALLATION OF E116 REFER TO ORIENTATION TAB AND PINNING CALLOUT ON PAGE 1.
6-21 INSTALL E117 WITH ORIENTATION FLAT TOWARD R8. CENTER TERMINAL OF E117 GOES INTO HOLE CLOSEST TO R8.

ECO M7762-CZØØ8

WIRE ADDS SIDE 1:

8-1 FROM PTH NEAR E16 PIN 6 AND E13 PIN 7 TO E6 PIN 7.
8-2 E63 PIN 6 TO E14 PIN 7.

ECO M7762-CZØ11

WIRE ADDS SIDE 1:

11-1 E81 PIN 11 TO E81 PIN 1.

ECO M7762-CXØ12

WIRE ADDS SIDE 1:

12-2 E3 PIN 4 TO E2 PIN 9.
12-3 E56 PIN 6 TO E2 PIN 10.
12-4 E2 PIN 8 TO E30 PIN 9.
12-5 E30 PIN 8 TO E54 PIN 3.

ECO M7762-CX15A

WIRE ADDS SIDE 1:

15-2 ADD WIRE FROM E2 PIN 4 TO E19 PIN 4.
15-3 ADD WIRE FROM E2 PIN 5 TO E29 PIN 10.
15-4 ADD WIRE FROM E2 PIN 6 TO E38 PIN 5.
15-5 ADD WIRE FROM E29 PIN 8 TO E29 PIN 9.
15-6 ADD WIRE FROM E29 PIN 9 TO THE FEED THRU BELOW E37 PIN 4.

REVISION HISTORY		
DATE	ECO NUMBER	REV.

TITLE: RL11 CONTROLLER

DOCUMENT NUMBER			
SIZE	CODE	NUMBER	REV.
D	UA	M7762-Ø-Ø	R
SCALE —/—/—		SHEET 2 OF 2	

AUTOMATED BY PRTLST.3P(44)

P A R T S L I S T

LINE	ITEM	DOCUMENT NUMBER	PART NUMBER	DESCRIPTION	QTY PER VARIATION 00	REFERENCE DESIGNATOR
1	1	D-MD-5012167-0-0	5012167-00	ETCH BRD M7762	1	
2	2	-		*** THIS ITEM IS NOT USED ***	-	
3	3		1001610-00	.01 MFD 50V +80-20% Z5U CER	103	C5,C6,C7,C10-C16,C18-C35,
						CONT C37-C45,C47-C110,C120,C121
4	4		1005306-00	*** THIS ITEM IS NOT USED ***	-	
5	5		1000042-00	1000.0 MMF 100V 5%200PPM MICA	1	C46
6	6		1004812-00	15 MFD 20V 10% S.TANT	3	C117,C118,C119
7	7		1000010-00	39.0 MMF 100V 5%200PPM MICA	1	C9
8	8		1114117-00	1N 4152 PIV=40 I=75	1	D14
9	9		1012121-00	*** THIS ITEM IS NOT USED ***	-	
10	10		1000050-00	.033 MFD 100V 80V 10% MYL	1	C4
11	11		1111577-00	1N 4454 TR= 4NS PIV= 50 S	4	D1,D2,D6,D9
12	12		1110994-00	1N 751A VZ= 5.1 5% .40W	1	D5
13	13	-		*** THIS ITEM IS NOT USED ***	-	
14	14	-		*** THIS ITEM IS NOT USED ***	-	
15	15		1209838-00	SKT,IC 16PIN DIP GOLD PLATE	1	E59
16	16		1209941-02	HEADER 100 40POS RT ANGLE	1	J1
17	17		1209941-03	HEADER RT ANGLE LEFT L	1	
18	18		1209941-04	HEADER RT ANGLE,RIGHT	1	
19	19		1210711-02	/REPLACED BY 12-16988-02	1	
20	20		1300005-05	R NETWORK 13-82 5.0 % 14PIN	1	E13
21	21		1309143-09	5.0 K .75 W10.0 % POT	2	R3,R19
22	22		1301781-00	82.0 .50 W 5.0 % CC	12	R38-R49
23	23		1301424-00	680.0 .25 W 5.0 % CC	6	R16,R20,R52,R53,R60,R61
24	24		1300275-00	330.0 .25 W 5.0 % CC	3	R27,R34,R62
25	25		1311522-00	200.0 .25 W 5.0 % CC	1	R28
26	26		1311422-00	178.0 .25 W 1.0 % RN55D-F10	4	R54,R55,R58,R59
27	27		1305125-00	383.0 .25 W 1.0 % RN55D-F10	2	R56,R57
28	28		1300229-00	100.0 .25 W 5.0 % CC	2	R13,R29
29	29		1300262-00	*** THIS ITEM IS NOT USED ***	-	

REVISION HISTORY			
ENG	ECO NUMBER	REV	SECTION.VARIATION INDEX
MB	M7762-CX012	L	[A] 00
MB	M7762-CX013	M	[B]
MB	M7762-CX015	N	[C]
			[D]
			[E]
			[F]
			[H]
			[J]
			[K]
			[L]
			[M]
			[N]

BASIC PART NO: M7762

SECTION A OF A

DRN: D. MAYUSKI	DATE: 07-MAR-77	D I G I T A L
CHK'D: P. BOSSMAN	DATE: 29-MAR-77	TITLE PARTS LIST RL11 CONTROLLER
DES.ENG: C. LIU	DATE: 08-APR-77	
RESP.ENG.: R. STROTT	DATE: 08-APR-77	DOCUMENT NUMBER
MFG.ENG.: R. STROTT	DATE: 08-APR-77	SIZE K · CODE PL · NUMBER M7762-0-DDP · REV N
ASSEMBLY NUMBER: D-UA-M7762-0-0	TOP DOCUMENT NUMBER: 0 B-DD-M7762-0	FILE NAME: Z1213N.PLS · EDIT 0: 16

"THIS DRAWING AND SPECIFICATIONS HEREIN, ARE THE PROPERTY OF DIGITAL EQUIPMENT CORPORATION AND SHALL NOT BE REPRODUCED OR COPIED OR USED IN WHOLE OR IN PART AS THE BASIS FOR THE MANUFACTURE OR SALE OF ITEMS WITHOUT WRITTEN PERMISSION. COPYRIGHT (C) 1982, DIGITAL EQUIPMENT CORPORATION "

LINE	ITEM	DOCUMENT NUMBER	PART NUMBER	DESCRIPTION	QTY PER VARIATION 00	REFERENCE DESIGNATOR
30	30	-		*** THIS ITEM IS NOT USED ***	-	
31	31	-		*** THIS ITEM IS NOT USED ***	-	
32	32		1302858-00	100.0 .25 W 1.0 % RN55D-F10	2	R2,R6
33	33		1303226-00	68.10 .25 W 1.0 % RN55D-F10	1	R1
34	34		1300274-00	220.0 .50 W 5.0 % CC	1	R4
35	35		1310630-00	1.33 K .25 W 1.0 % RN55D-F10	1	R7
36	36		1302871-00	1.21 K .25 W 1.0 % RN55D-F10	1	R10
37	37		1302685-00	909.0 .25 W 1.0 % RN55D-F10	1	R11
38	38		1300417-00	*** THIS ITEM IS NOT USED ***	-	
39	39	-		*** THIS ITEM IS NOT USED ***	-	
40	40		1301972-00	*** THIS ITEM IS NOT USED ***	-	
41	41		1300411-00	2.0 K .25 W 1.0 % RN55D-F10	2	R17,R63
42	42	-		*** THIS ITEM IS NOT USED ***	-	
43	43		1300365-00	1.0 K .25 W 5.0 % CC	1	R33
44	44	-		*** THIS ITEM IS NOT USED ***	-	
45	45	-		*** THIS ITEM IS NOT USED ***	-	
46	46		1300447-00	4.70 K .25 W 5.0 % CC	1	R31
47	47		1300271-00	220.0 .25 W 5.0 % CC	1	R32
48	48		1302388-00	*** THIS ITEM IS NOT USED ***	-	
49	49		1302177-00	47.0 K .25 W 5.0 % CC	1	R50
50	50		1302397-00	180.0 K .25 W 5.0 % CC	1	R51
51	51	-		*** THIS ITEM IS NOT USED ***	-	
52	52		1503409-01	DEC6534B PNP 310MW SI 40 90 P	1	Q2
53	53		1503121-00	2N 2369 NPN 350MW SI N	1	Q3
54	54		1513490-00	2N 4403 PNP 350MW SI-40 30	4	Q1,Q4,Q5,Q6
55	55		1614666-00	DELAY= 500NS,10TAPS	1	E18
56	56		1610033-00	DELAY= 10-100NS,10TAPS	1	E9
57	57		1611243-00	DELAY=25-250NS,10TAPS RCL&L-183	1	E19
58	58		1614159-00	DELAY 50NS,10TAPS	1	E22
59	59		1811660-12	OSCILLATOR, XTAL 8.200 MHZ	1	E35
60	60	-		*** THIS ITEM IS NOT USED ***	-	
61	61		1905547-00	7474 FF-D DUAL,EDGE TRIGG	1	E67
62	62		1910153-00	DEC 74150 MUX 1 OF 16	1	E109
63	63		1914072-00	74159 DECODER-4 TO 16 OPN	1	E47
64	64		1910650-00	74161 COUNTER,SYNCHR. UP	4	E98,E99,E104,E110
65	65		1909061-00	DEC 74H52 AND-OR GATE,XPNDABLE	1	E80
66	66		1910532-00	74S00 NAND GATE-QUAD 2IN	2	E7,E32
67	67		1913312-00	7428P NOR GATE-QUAD 2IN POS	1	E29
68	68		1910534-00	74S04 INVERTER GATE-HEX 1I	4	E20,E27,E30,E43
69	69		1910536-00	74S10 NAND GATE-TRIPLE 3IN	1	E8
70	70		1911712-00	74S51 AND-OR GATE-INVERT D	1	E74
71	71		1910544-00	74S74 FF-D DUAL,EDGE TRIGG	6	E21,E28,E31,E53,E56,E66
72	72		1910545-00	74S112 FF-JK DUAL,EDGE TRIG	1	E63
73	73		1911911-00	DEC 74S124 OSCILLATOR,DUAL VOLT	1	E118
74	74		1912799-00	LS00 NAND-GATE-QUAD 2IN,P	3	E2,E38,E45
75	75		1912801-00	LS02 NOR-GATE-QUAD 2IN	2	E46,E81
76	76		1912803-00	LS04 INVERTER GATE,HEX	2	E72,E92
77	77		1912805-00	LS08 AND GATE-QUAD 2IN,PO	3	E1,E40,E71

D	I	G	I	T	A	L	TITLE	SECTION A OF A	SIZE	CODE	DOCUMENT NUMBER	REV
							RL11 CONTROLLER		K	PL	M7762-0-DBP	N

LINE	ITEM	DOCUMENT NUMBER	PART NUMBER	DESCRIPTION	QTY PER VARIATION 00	REFERENCE DESIGNATOR
78	78		1912808-00	LS11 AND GATE-TRIPLE 3IN	1	E36
79	79		1912810-00	LS20 NAND GATE-DUAL 4IN	1	E62
80	80		1912816-00	LS32 OR GATE-QUAD 2IN,POS	3	E42,E52,E91
81	81		1912820-00	LS51 A-O-I GATE 2-WIDE 2I	3	E44,E82,E93
82	82		1912824-00	LS74 FF-D DUAL,EDGE TRIGG	3	E57,E90,E103
83	83		1912829-00	LS86 X-OR GATE-QUAD 2IN	1	E83
84	84		1912834-00	LS112 FF-JK,DUAL,EDGE TRIG	3	E12,E54,E55
85	85		1912837-00	LS123 ONE SHOT-DUAL,RETRIG	1	E39
86	86		1911676-00	74S139 DECODER-DUAL TWO-INP	2	E37,E70
87	87		1912844-00	LS151 MUX : OF 8 & DATA	1	E102
88	88		1912845-00	LS153 MUX 1 OF 4 (DUAL)	2	E23,E65
89	89		1912697-00	LS174 FF-D HEX W/CLEAR	1	E88
90	90		1912854-00	LS193 COUNTER,SYNCHR,4BIT,	4	E24,E25,E85,E86
91	91		1912696-00	LS194A SHIFT REG.,4BIT BI-D	1	E64
92	92		1912864-00	LS279 LATCH,QUAD-S-R	1	E73
93	93		1910268-00	DEC 75107B RECEIVER,LINE,DUAL,	3	E3,E4,E10
94	94		1911341-00	75113 DRIVER,LINE,DUAL,MA	3	E5,E6,E14
95	95		1911527-00	8097 BUFFER GATE-HEX 2INP	3	E61,E87,E89
96	96		1912951-00	DM 8556 COUNTER,BINARY,4BIT	9	E50,E51,E60,E68,E78,E94-E97
97	97		1911579-00	8641 TRANSCEIVER,BUS,QUA	3	E15,E26,E69
98	98		1912083-00	/REPLACED BY 19-14438-00	2	E41,E79
99	99		1909713-00	DEC 8815 NOR GATE-DUAL 4IN	1	E100
100	100		1913474-00	9401 GENERATOR/CHECKER CR	1	E75
101	101		1913475-00	9403 BUFFER MEMORY(FIFO)	4	E105-E108
102	102		1913040-00	DC 005 TRANSCEIVER 4BIT	8	E33,E34,E48,E49,E58,E76,E77,E84
103	103		23018B8-00	B8-01	1	E112
104	104		23016B8-00	B8-01	1	E113
105	105		23017B8-00	B8-01	1	E114
106	106		23020D1-00	D1-02	1	E111
107	107		9000024-01	EYELET,ROLL FLANGE .1210DX .192	12	
108	108		1210385-01	PIN 1POS WIRE WRAP	19	W17-W35
109	109		9009185-00	JUMPER, WIRE, INSULATED, BLACK B	12	W1-W8,W12,W14,W15,W16
110	110		1910544-01	74S74-6000-D DUAL,EDGE TRIG	1	E101
111	111		9008085-00	*** THIS ITEM IS NOT USED ***	-	
112	112		9105740-55	WIRE(WRAP)30AWG UL1423	A/R	
113	113		1302862-00	50.0 .25 W 1.0 % RN55D-F10	1	R36
114	114		1313583-00	150.0 .25 W 1.0 % RN55D-F10	1	R65
115	115		1912536-01	7805 VOLT REG,FIX +5V	1	E115
116	116		1000064-00	3.9MFD 10V 10% S.TANT	1	C36
117	117		1912541-00	79M05 VOLT REG,FIX -5V	1	E116
118	118		1914471-00	78L08 VOLT REG,FIX +8V	1	E117
119	119	-		*** THIS ITEM IS NOT USED ***	-	
120	120		1311465-00	43.0 .25 W 5.0 % CC	1	R64
121	121		1910645-00	75452 DRIVER,PERIPH,DUAL,	2	E16,E17
122	122		1302873-00	261.0 .25 W 1.0 % RN55D-F10	1	R9
123	123		1302874-00	147.0 .25 W 1.0 % RN55D-F10	2	R14,R26
124	124	-		*** THIS ITEM IS NOT USED ***	-	
125	125		1012783-00	.022 MFD 50V +80-20% CER	1	C122

D	I	G	I	T	A	L	TITLE	SECTION	SIZE	CODE	DOCUMENT NUMBER	REV
							RL11 CONTROLLER	A OF A	K	PL	M7762-0-DBP	N

AUTOMATED BY PRTLST.3P(44)

P A R T S L I S T

LINE	ITEM	DOCUMENT NUMBER	PART NUMBER	DESCRIPTION	QTY PER VARIATION 00	REFERENCE DESIGNATOR
126	126		1303177-00	2.40 K .25 W 5.0 % CC	1	R8
127	127		1300316-00	470.0 .25 W 5.0 % CC	1	R18
128	128	SEE NOTE 1	9006021-01	SCREW,PAN,PHIL 6-32X 5/16 SS	1	
129	129		9008185-00	NUT,KEP 6-32X 1/4 AF	1	
130	130		1913340-00	74832 DR GATE-QUAD 2IN	1	E11
131	131		9107295-11	TUBING,THIN WALL,.066ID UL	A/R	
132	132		9007201-00	TRANSIPADS #10253	1	
133	133		1017472-00	10 MFD 35V +50-10% AL EL	8	C1,C8,C111-C116
134	134		1300268-00	200.0 1.0 W ±.0 % RN70D-F10	1	R37
135	135		1113953-00	1N 5523D VZ= 5.1 1%	1	D13

136 NOTE: 1. USE ITEM NO. 128 (9006021-01) FOR MOUNTING E115 (1912536-00).

D	I	G	I	T	A	L	TITLE RL11 CONTROLLER	SECTION A OF A	SIZE K	CODE PL	DOCUMENT NUMBER M7762-0-DBP	REV N

"THIS DRAWING AND SPECIFICATIONS, HEREIN, ARE THE PROPERTY OF DIGITAL EQUIPMENT CORPORATION AND SHALL NOT BE REPRODUCED OR COPIED OR USED IN WHOLE OR IN PART AS THE BASIS FOR THE MANUFACTURE OR SALE OF ITEMS WITHOUT WRITTEN PERMISSION. COPYRIGHT © 1978 , DIGITAL EQUIPMENT CORPORATION"

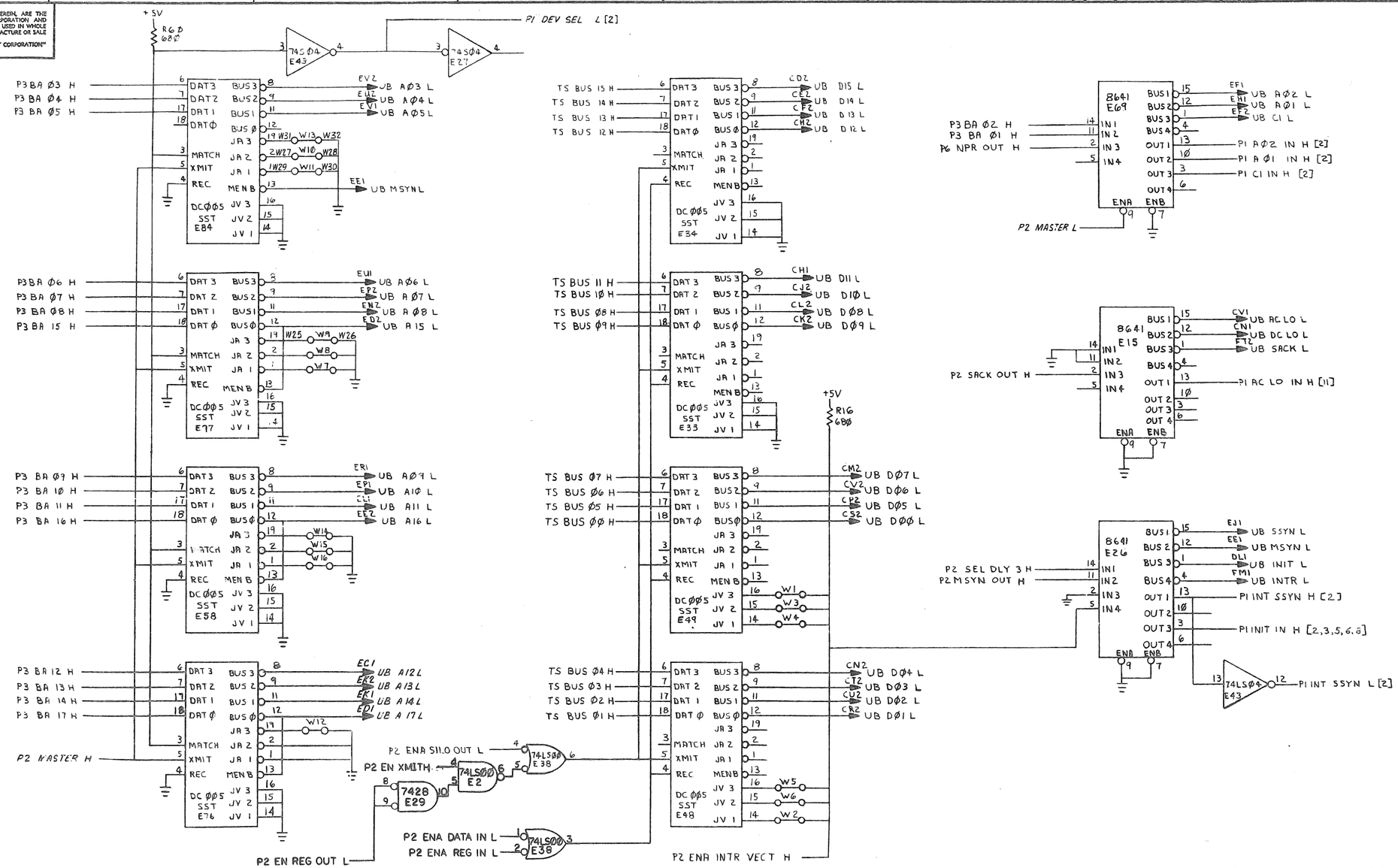

UNIBUS TRANSCEIVERS

REV.	CHANGE NO.	CHK.	
E	M7762-CØØØ1	C. LIU	
H	M7762-ØØØØ3	C. LIU	
F1	M7762-CZØØ4		
J	17762-CZØØ5 J. VAGIAS; ECO M7762-ØØØØ3; VOIDED PER THIS ECO		
K	M7762-CZØØ6 J. VAGIAS		
L	M7762-CZØØ8 G. DONOVAN		
M	M7762-CZØØ9 M. BROWN		
N	M7762-CZØ11 J. VAGIAS		
P	M7762-CXØ12 M. BROWN		
R	M7762-CXØ15 L.R. 5JAN82 A. MANDRACCIA T. Nicholls		

DRN.		FIRST USED ON RLII
CHK'D		TITLE (P1) RLII CONTROLLER
ENG.		
PROJ. ENG.		
PROD.		
NEXT HIGHER ASSY.	B-DD-M7762-Ø	SIZE D CODE CS NUMBER M7762-Ø-1 REV. R
SCALE	—	
SHEET 1 OF 11		DIST.

"THIS DRAWING AND SPECIFICATIONS, HEREIN, ARE THE PROPERTY OF DIGITAL EQUIPMENT CORPORATION AND SHALL NOT BE REPRODUCED OR COPIED OR USED IN WHOLE OR IN PART AS THE BASIS FOR THE MANUFACTURE OR SALE OF ITEMS WITHOUT WRITTEN PERMISSION. COPYRIGHT © 1978 DIGITAL EQUIPMENT CORPORATION"

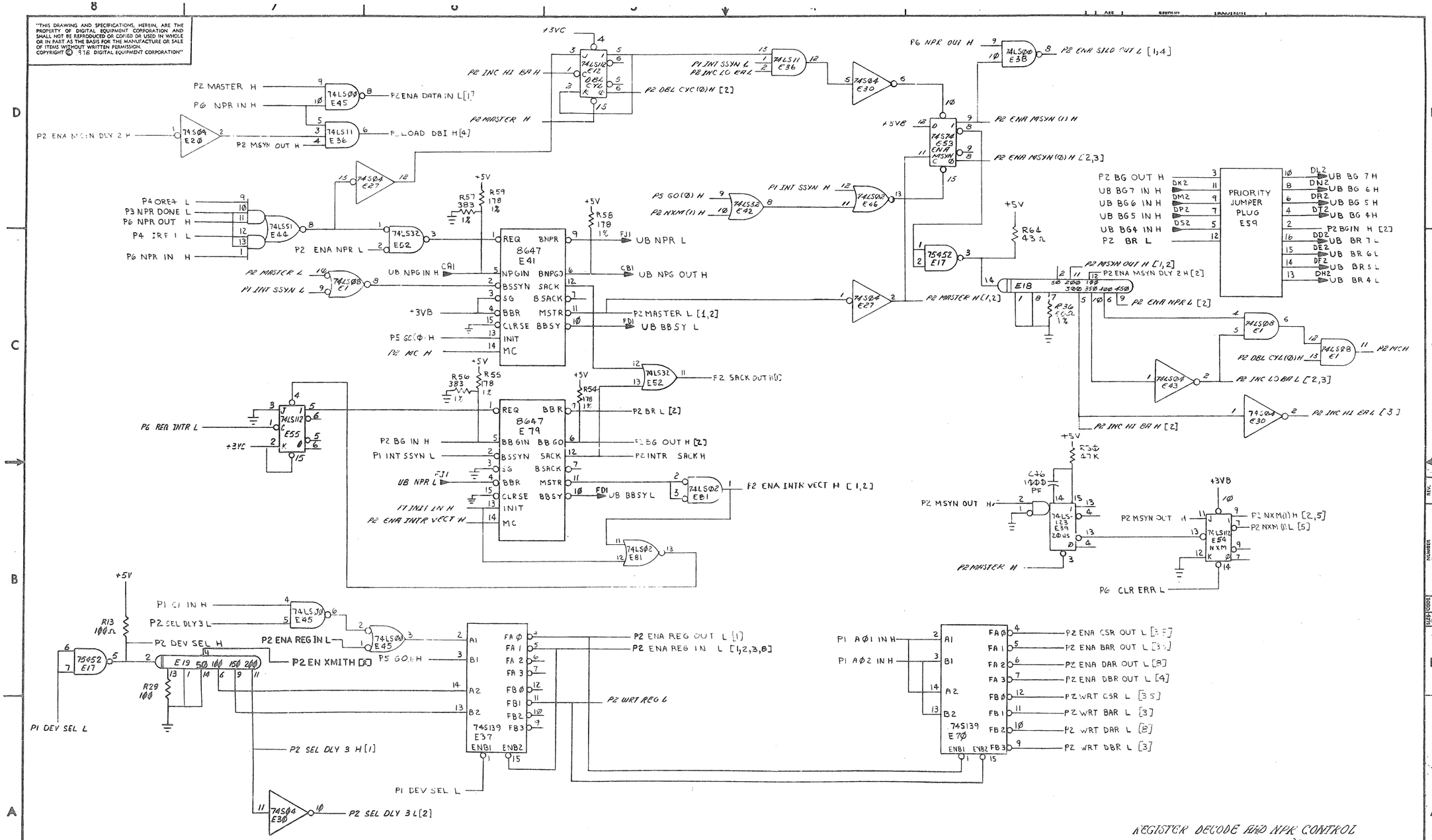

REGISTER DECODE AND NPR CONTROL

REVISIONS		
CHK	CHANGE NO.	REV.

TITLE	SIZE	CODE	NUMBER	REV.
RL11 CONTROLLER (P2)	D	CS	M7762-0-1	R
SCALE —	SHEET 2 OF 11	DIST.		

"THIS DRAWING AND SPECIFICATIONS, HEREIN, ARE THE PROPERTY OF DIGITAL EQUIPMENT CORPORATION AND SHALL NOT BE REPRODUCED OR COPIED OR USED IN WHOLE OR IN PART AS THE BASIS FOR THE MANUFACTURE OR SALE OF ITEMS WITHOUT WRITTEN PERMISSION.
COPYRIGHT © 1978 DIGITAL EQUIPMENT CORPORATION"

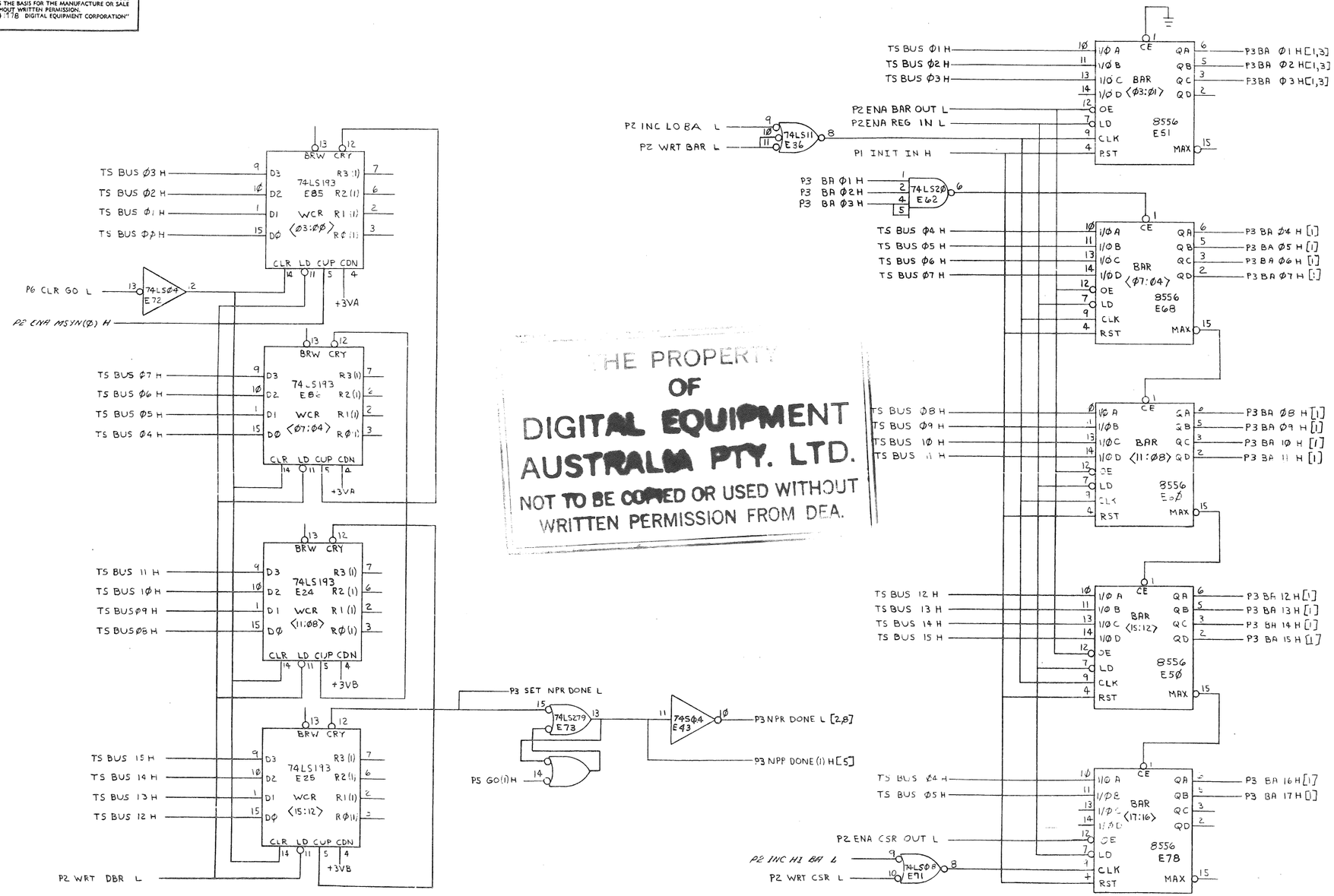

THE PROPERTY OF DIGITAL EQUIPMENT AUSTRALIA PTY. LTD. NOT TO BE COPIED OR USED WITHOUT WRITTEN PERMISSION FROM DEA.

WORD COUNT REGISTER AND BUS ADDRESS REGISTER

REVISIONS		
CHK	CHANGE NO.	REV.

TITLE	SIZE	CODE	NUMBER	REV.
RLII CONTROLLER (P3)	D	CS	M7762-Ø-1	R
SCALE —//— SHEET 3 OF 11	DIST.			

"THIS DRAWING AND SPECIFICATIONS, HEREIN, ARE THE PROPERTY OF DIGITAL EQUIPMENT CORPORATION AND SHALL NOT BE REPRODUCED OR COPIED OR USED IN WHOLE OR IN PART AS THE BASIS FOR THE MANUFACTURE OR SALE OF ITEMS WITHOUT WRITTEN PERMISSION. COPYRIGHT © 1978 DIGITAL EQUIPMENT CORPORATION"

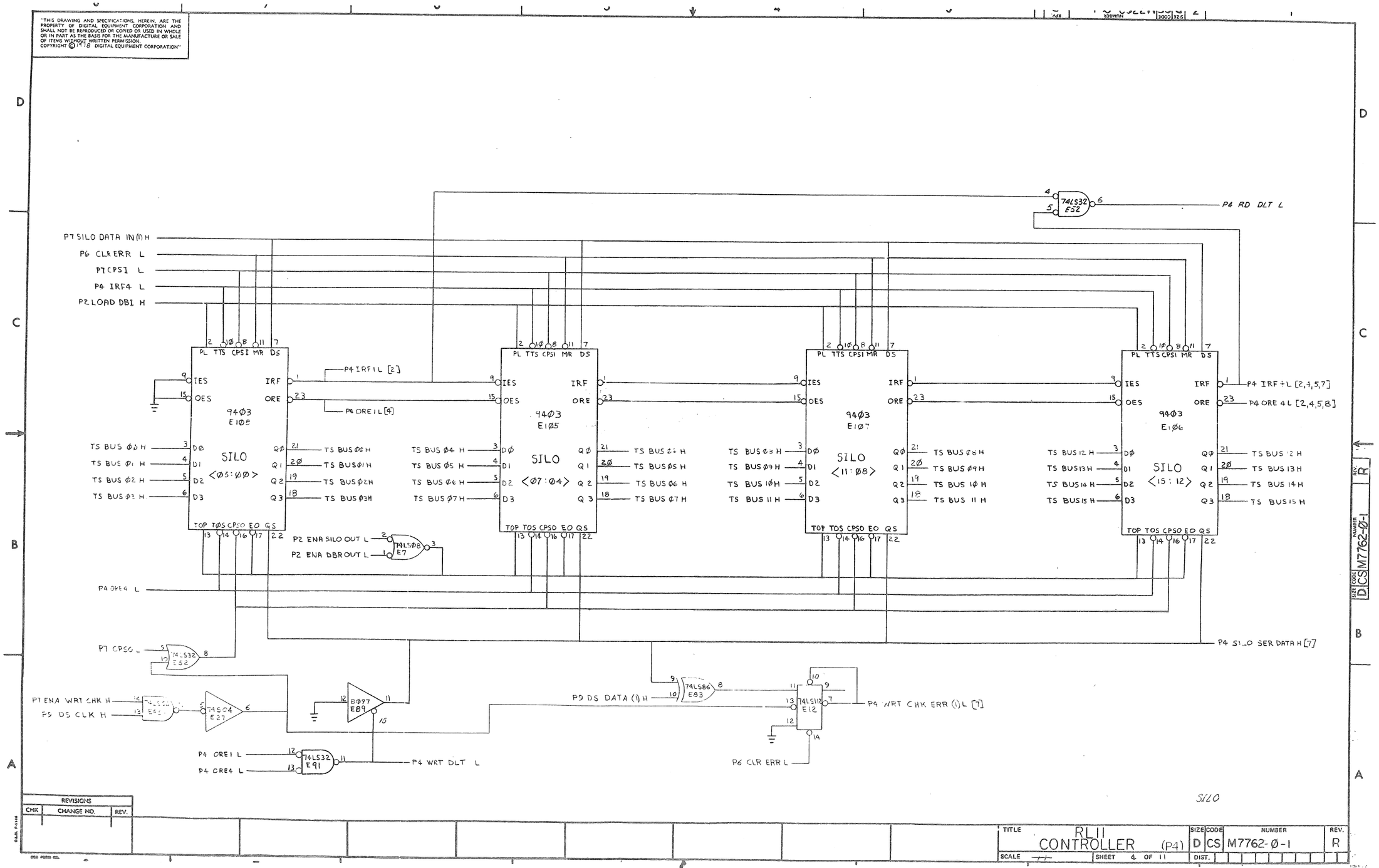

REVISIONS		
CHK	CHANGE NO.	REV.

TITLE	SIZE	CODE	NUMBER	REV.
RL11 CONTROLLER (P4)	D	CS	M7762-Ø-1	R
SCALE —	SHEET 4 OF 11		DIST.	

"THIS DRAWING AND SPECIFICATIONS, HEREIN, ARE THE PROPERTY OF DIGITAL EQUIPMENT CORPORATION AND SHALL NOT BE REPRODUCED OR COPIED OR USED IN WHOLE OR IN PART AS THE BASIS FOR THE MANUFACTURE OR SALE OF ITEMS WITHOUT WRITTEN PERMISSION.
COPYRIGHT © 1978 DIGITAL EQUIPMENT CORPORATION"

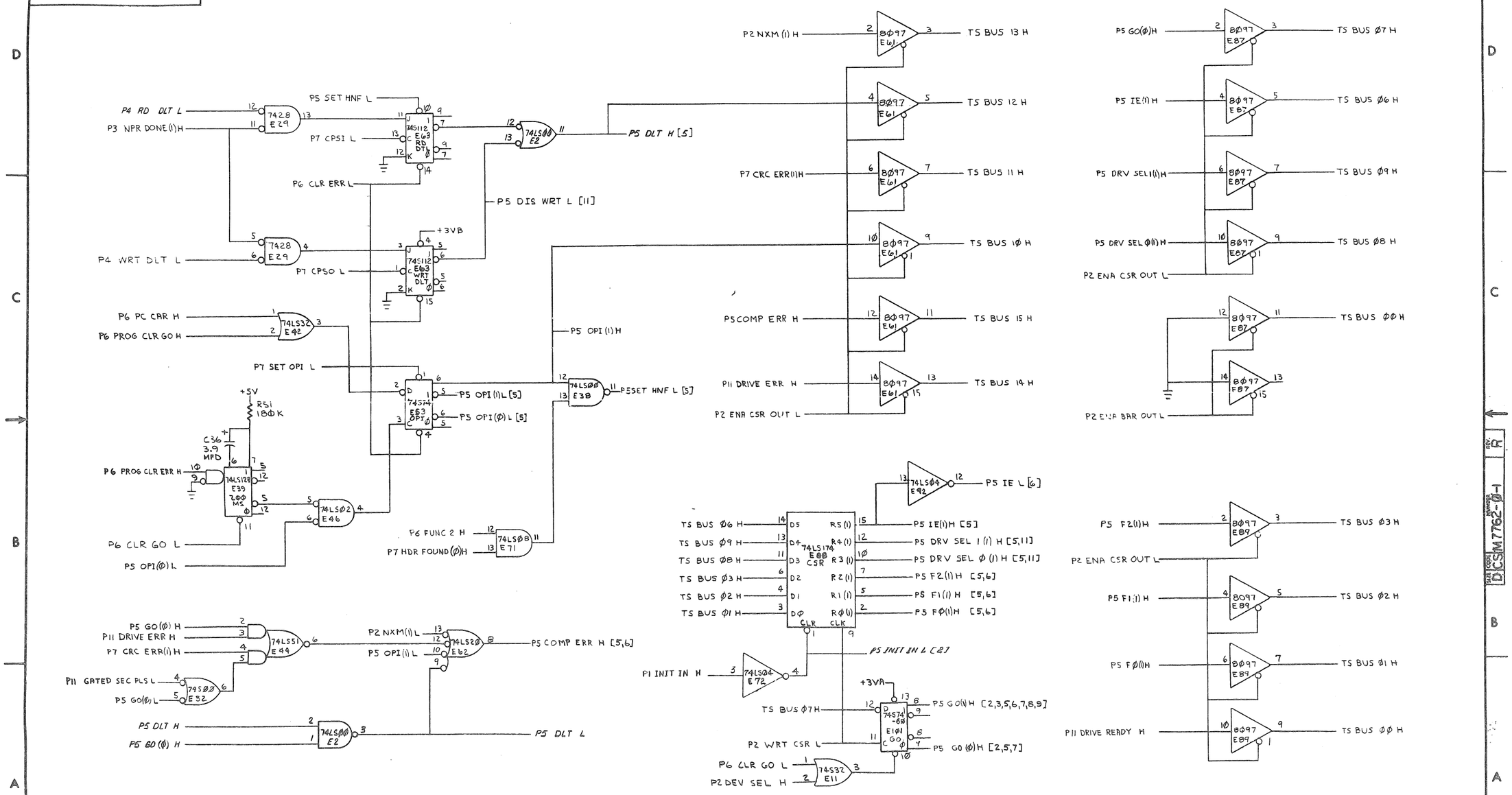

REVISIONS		
CHK	CHANGE NO.	REV.

TITLE	SIZE	CODE	NUMBER	REV.
RL11 CONTROLLER (P5)	D	CS	M7762-Ø-1	R
SCALE —	SHEET 5 OF 11	DIST.		

"THIS DRAWING AND SPECIFICATIONS, HEREIN, ARE THE PROPERTY OF DIGITAL EQUIPMENT CORPORATION AND SHALL NOT BE REPRODUCED OR COPIED OR USED IN WHOLE OR IN PART AS THE BASIS FOR THE MANUFACTURE OR SALE OF ITEMS WITHOUT WRITTEN PERMISSION.
COPYRIGHT © 1979 DIGITAL EQUIPMENT CORPORATION"

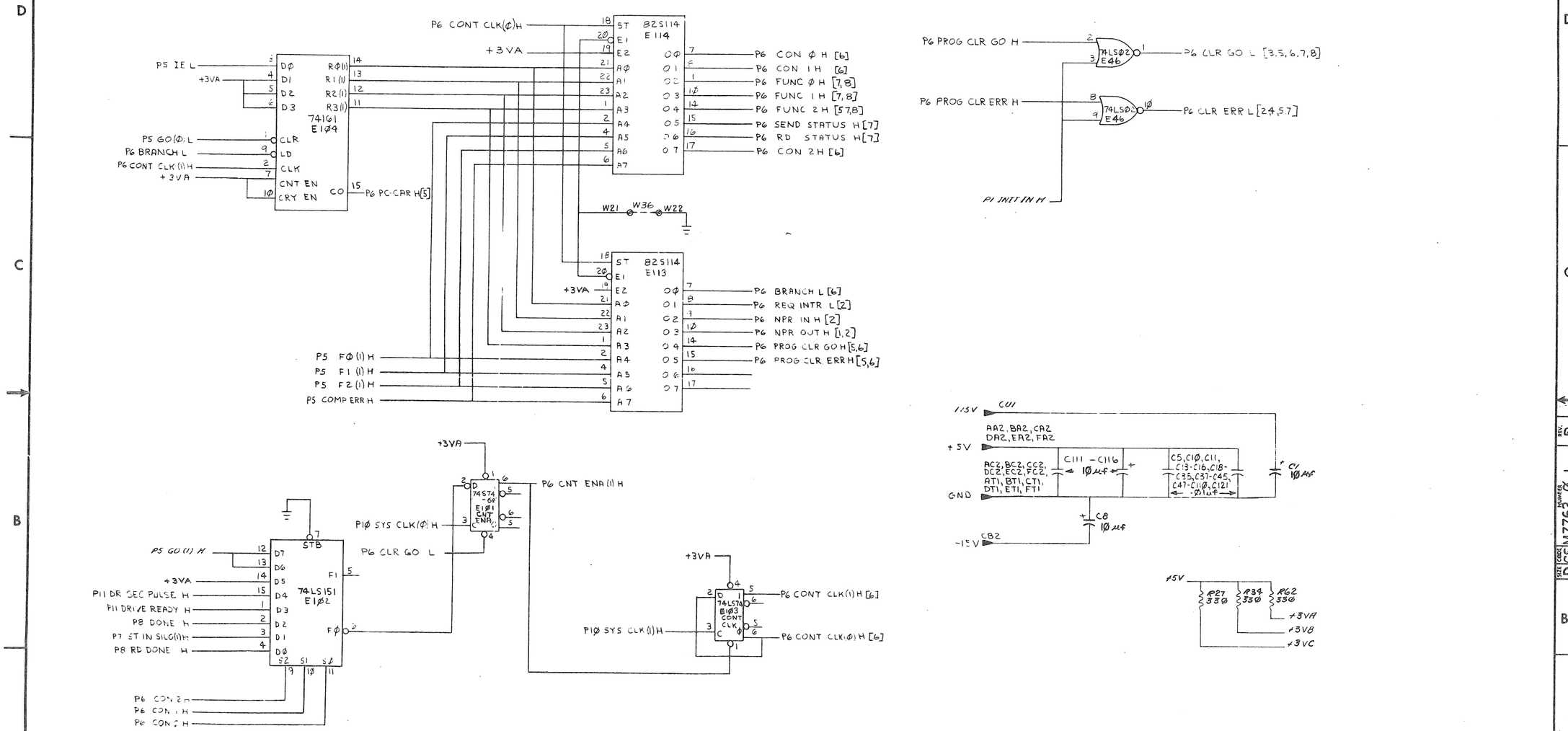

MICRO SEQUENCER FUNCTION CONTROL

REVISIONS		
CHK	CHANGE NO.	REV.

TITLE	SIZE	CODE	NUMBER	REV.
RL11 CONTROLLER (P6)	D	CS	M7762-Ø-1	R
SCALE —	SHEET 6 OF 11	DIST.		

"THIS DRAWING AND SPECIFICATIONS, HEREIN, ARE THE PROPERTY OF DIGITAL EQUIPMENT CORPORATION AND SHALL NOT BE REPRODUCED OR COPIED OR USED IN WHOLE OR IN PART AS THE BASIS FOR THE MANUFACTURE OR SALE OF ITEMS WITHOUT WRITTEN PERMISSION
COPYRIGHT © 1978 DIGITAL EQUIPMENT CORPORATION"

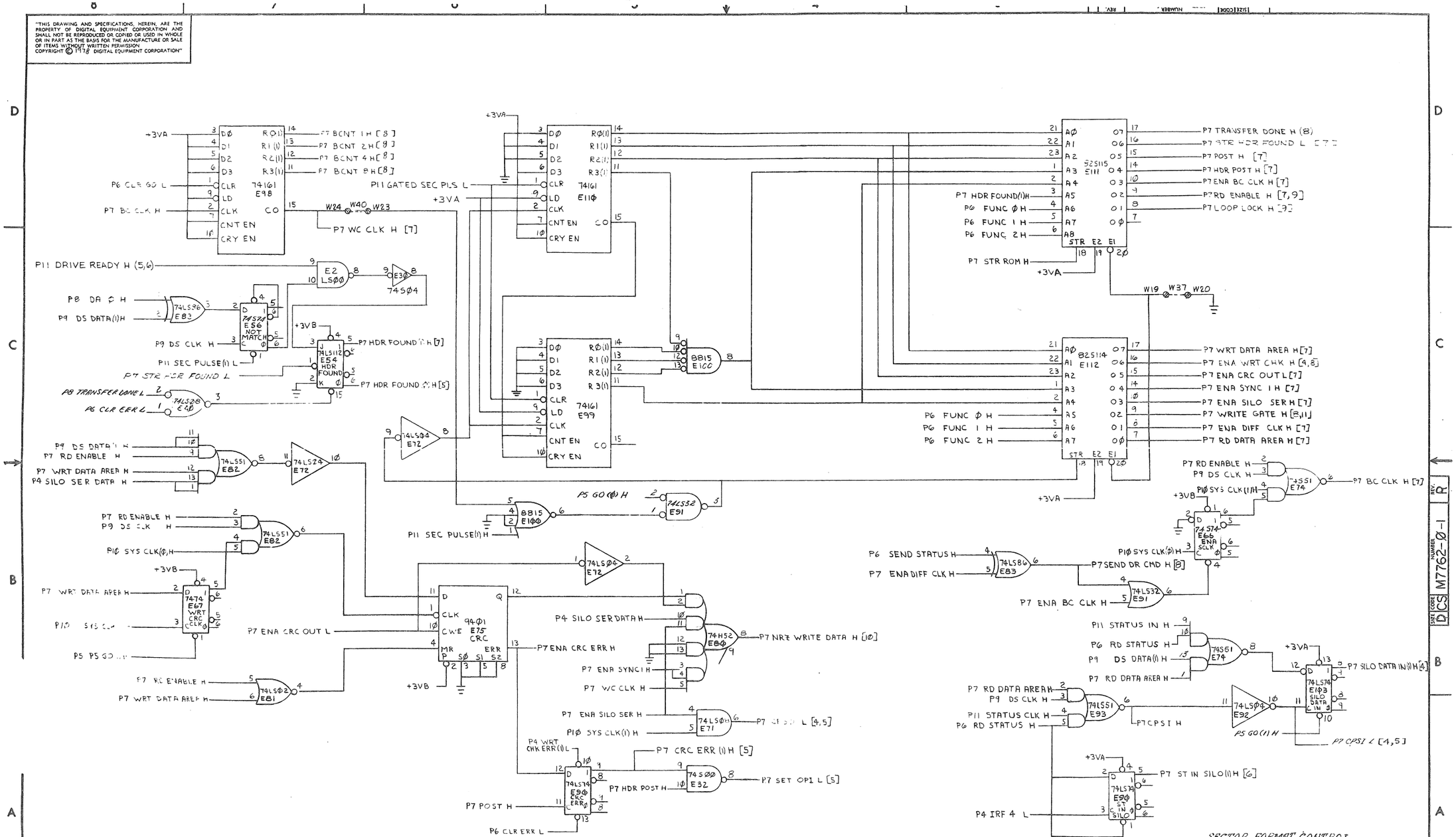

REVISIONS		
CHK	CHANGE NO.	REV.

TITLE	SIZE	CODE	NUMBER	REV.
RL11 CONTROLLER (P7)	D	CS	M7762-0-1	R
SCALE —	SHEET 7 OF 11	DIST.		

"THIS DRAWING AND SPECIFICATIONS, HEREIN, ARE THE PROPERTY OF DIGITAL EQUIPMENT CORPORATION AND SHALL NOT BE REPRODUCED OR COPIED OR USED IN WHOLE OR IN PART AS THE BASIS FOR THE MANUFACTURE OR SALE OF ITEMS WITHOUT WRITTEN PERMISSION.
COPYRIGHT © 1978 DIGITAL EQUIPMENT CORPORATION"

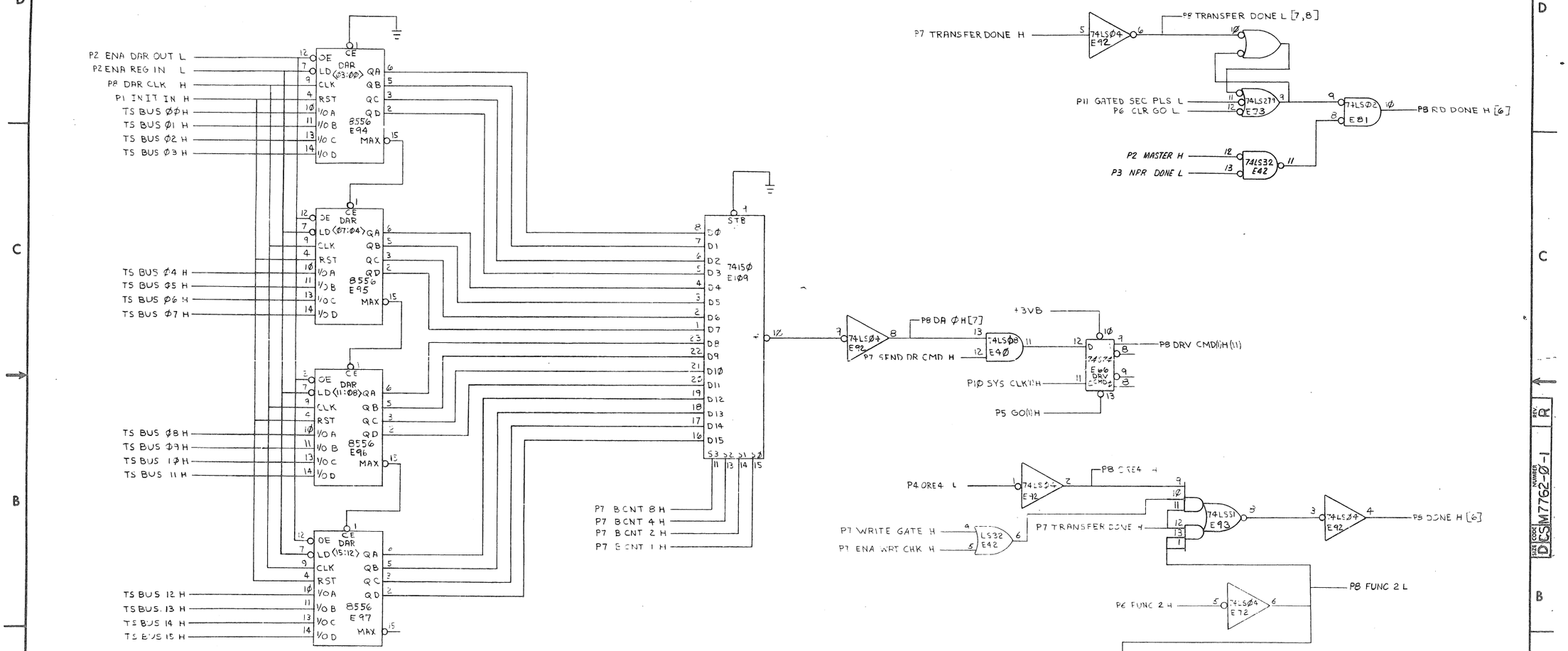

DAR AND DRIVE COMMAND ; FUNCTION TERMINATION

REVISIONS		
CHK	CHANGE NO.	REV.

TITLE	SIZE	CODE	NUMBER	REV.
RL11 CONTROLLER (P8)	D	CS	M7762-Ø-1	R
SCALE —H— SHEET 8 OF 11	DIST.			

"THIS DRAWING AND SPECIFICATIONS, HEREIN, ARE THE PROPERTY OF DIGITAL EQUIPMENT CORPORATION AND SHALL NOT BE REPRODUCED OR COPIED OR USED IN WHOLE OR IN PART AS THE BASIS FOR THE MANUFACTURE OR SALE OF ITEMS WITHOUT WRITTEN PERMISSION. COPYRIGHT © '78 DIGITAL EQUIPMENT CORPORATION"

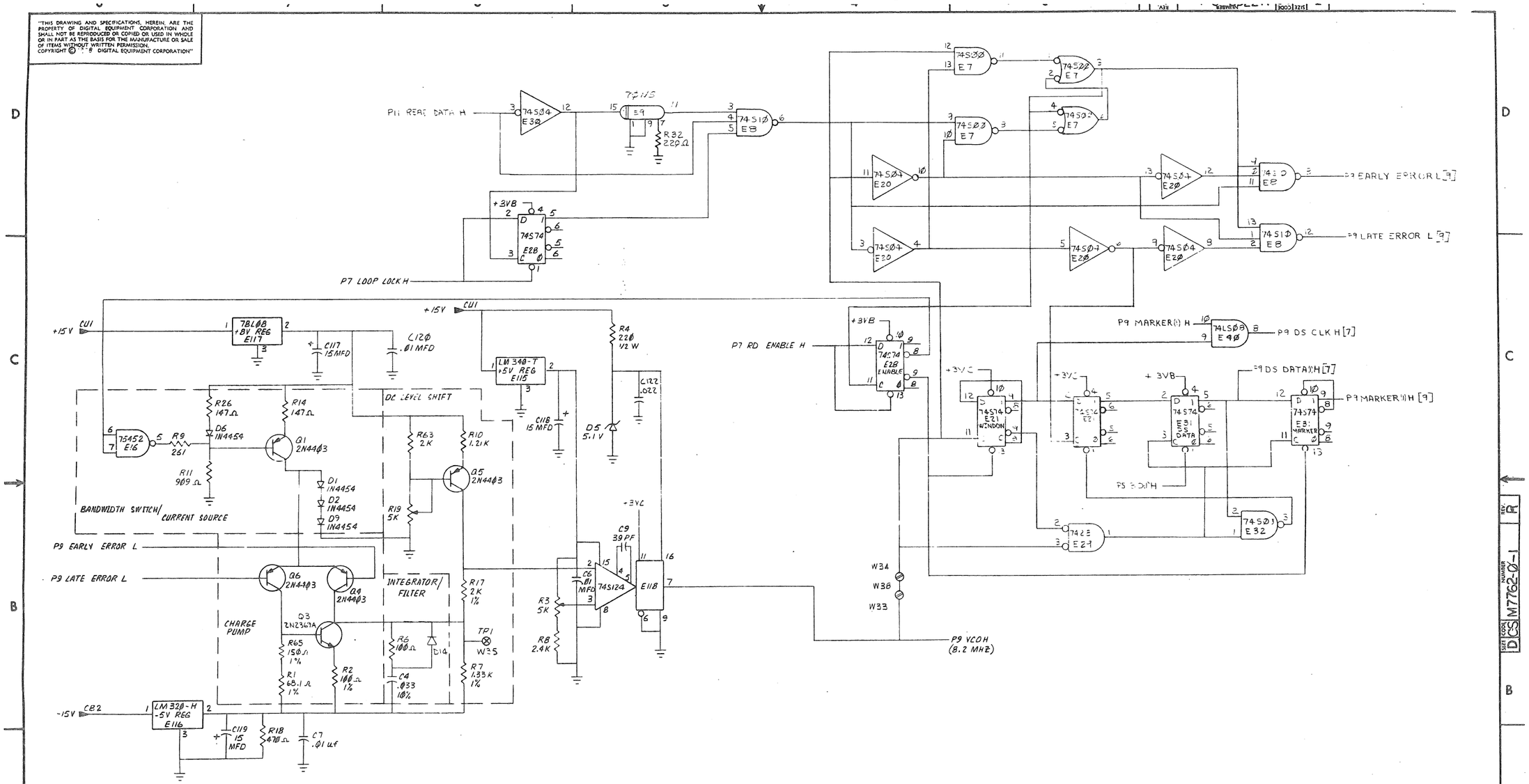

PHASE LOCK LOOP AND DATA SEPARATION

REVISIONS		
CHK	CHANGE NO.	REV.

TITLE	SIZE	CODE	NUMBER	REV.
RL11 CONTROLLER (P9)	D	CS	M7762-0-1	R
SCALE —	SHEET 9 OF 11	DIST.		

"THIS DRAWING AND SPECIFICATIONS, HEREIN, ARE THE PROPERTY OF DIGITAL EQUIPMENT CORPORATION AND SHALL NOT BE REPRODUCED OR COPIED OR USED IN WHOLE OR IN PART AS THE BASIS FOR THE MANUFACTURE OR SALE OF ITEMS WITHOUT WRITTEN PERMISSION.
COPYRIGHT © 1978 DIGITAL EQUIPMENT CORPORATION"

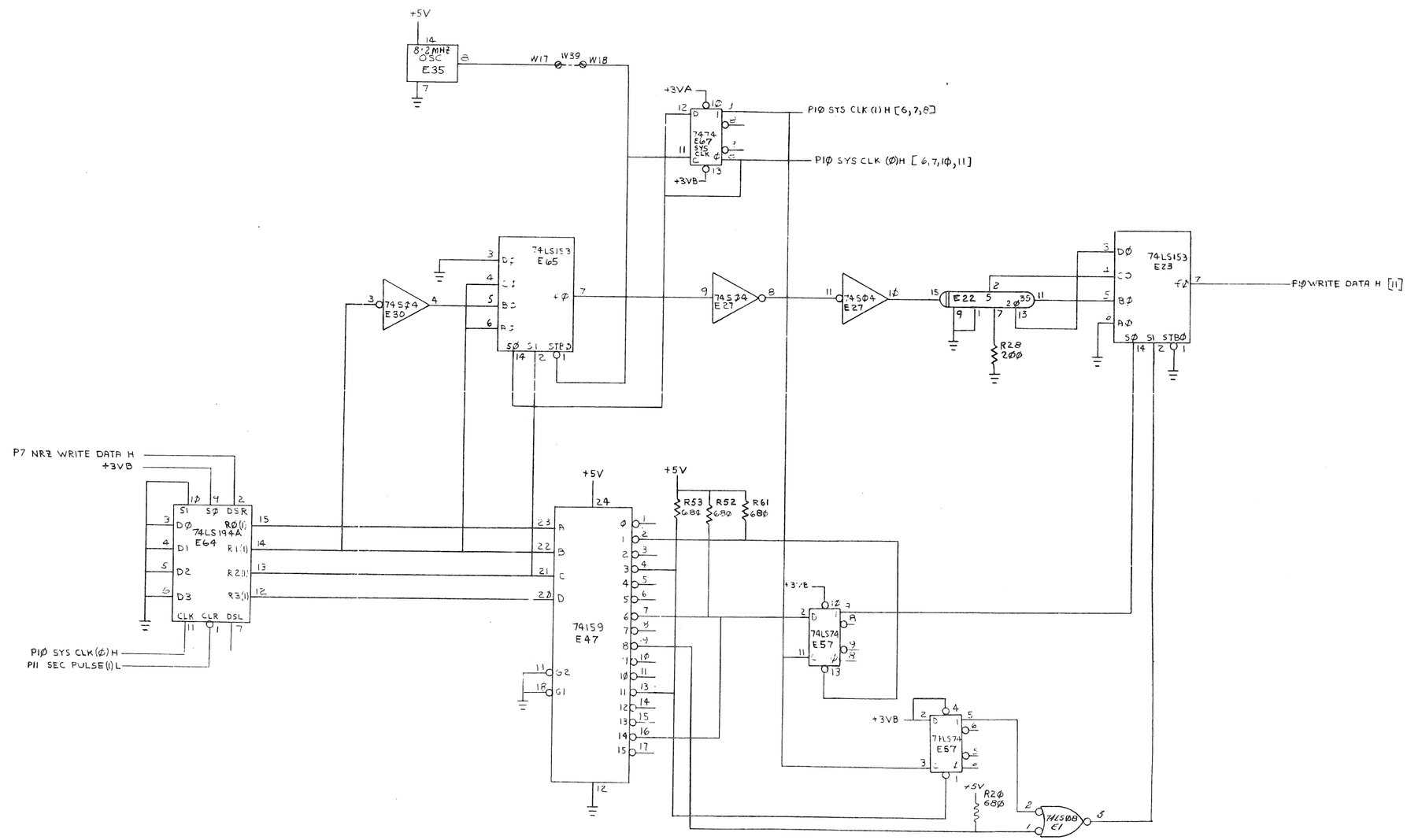

WRITE DATA ENCODE AND PRECOMPENSATION

REVISIONS		
CHK	CHANGE NO.	REV.

TITLE	SIZE	CODE	NUMBER	REV.
RL11 CONTROLLER (PIØ)	D	CS	M7762-Ø-1	R
SCALE —	SHEET 10 OF 11	DIST.		

"THIS DRAWING AND SPECIFICATIONS, HEREIN, ARE THE PROPERTY OF DIGITAL EQUIPMENT CORPORATION AND SHALL NOT BE REPRODUCED OR COPIED OR USED IN WHOLE OR IN PART AS THE BASIS FOR THE MANUFACTURE OR SALE OF ITEMS WITHOUT WRITTEN PERMISSION.
COPYRIGHT © 1978 DIGITAL EQUIPMENT CORPORATION"

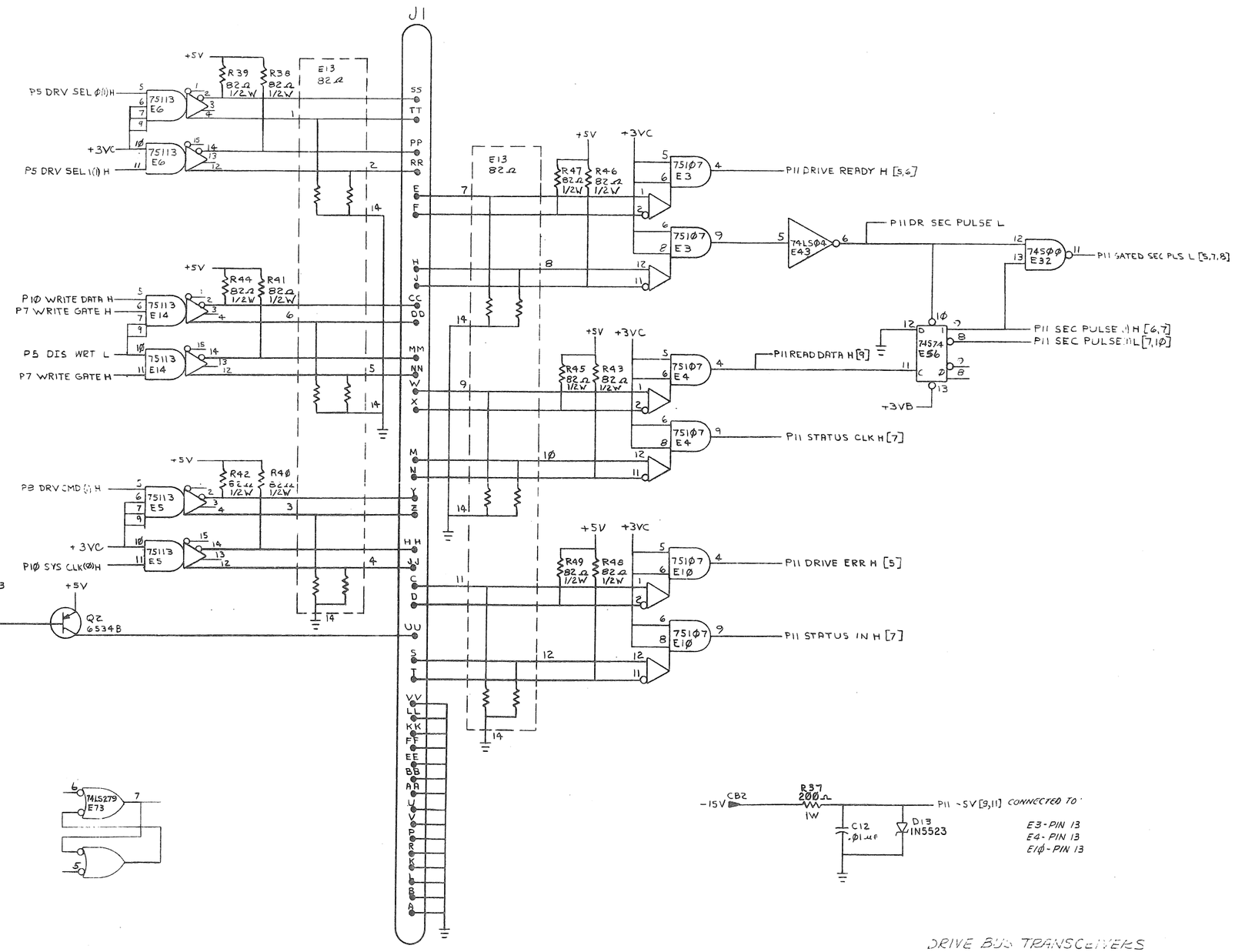

REVISIONS		
CHK	CHANGE NO.	REV.

TITLE	SIZE	CODE	NUMBER	REV.
RL11 CONTROLLER (P11)	D	CS	M7762-Ø-1	R
SCALE —	SHEET 11 OF 11	DIST.		

"THIS DRAWING AND SPECIFICATIONS, HEREIN, ARE THE PROPERTY OF DIGITAL EQUIPMENT CORPORATION AND SHALL NOT BE REPRODUCED OR COPIED OR USED IN WHOLE OR IN PART AS THE BASIS FOR THE MANUFACTURE OR SALE OF ITEMS WITHOUT WRITTEN PERMISSION.
COPYRIGHT © 1977 , DIGITAL EQUIPMENT CORPORATION"

NOTES:

1. SIGNAL NAMES HAVE THE FORM
   PP NAME x [N]

   PREFIX PP ⇒ UB - UNIBUS SIGNAL LINE
   TS - TRISTATE SIGNAL WITH MORE THAN ONE ORIGIN
   PM - INTERNAL. SIGNAL WHOSE ORIGIN IS ON PAGE NUMBER M

   SUFFIX x ⇒ ASSERTED LEVEL OF SIGNAL (H OR L)

   [N] ⇒ APPEARS AT SIGNAL ORIGIN. N IS PAGE NUMBER OF DESTINATION.

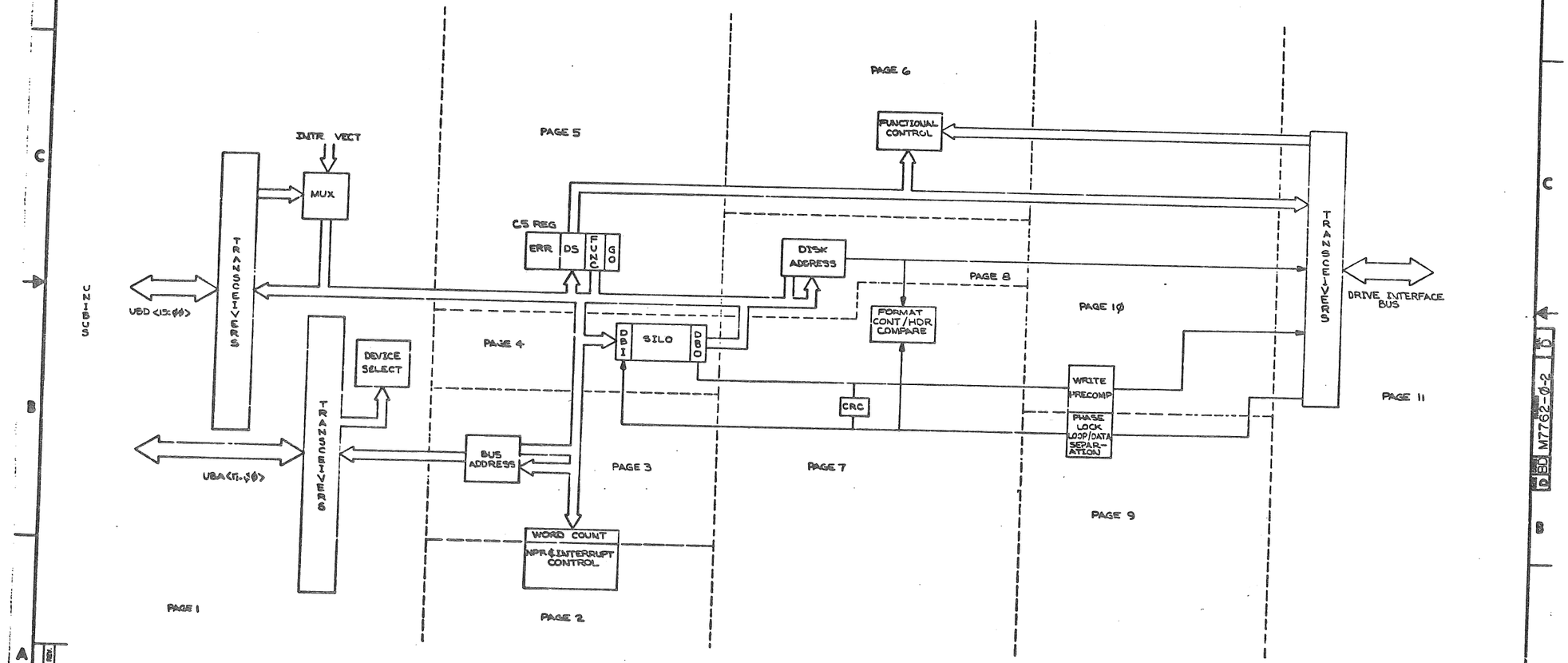

DRN		3/3/77
CHK'D		8 Jun 77
ENG.		8 Jun 77
PROJ. ENG.		8 Jun 77
PROD.		8 Jun 77
NEXT HIGHER ASSY.	B-DD-M7762-0	
SCALE		
SHEET 1 OF 1		

FIRST USED ON: RL11

digital

TITLE: RL11 CONTROLLER BLOCK DIAGRAM

SIZE	CODE	NUMBER	REV.
D	BD	M7762-0-2	D

DIST.

M7762-0-2 D BD

"THIS DRAWING AND SPECIFICATIONS, HEREIN, ARE THE PROPERTY OF DIGITAL EQUIPMENT CORPORATION AND SHALL NOT BE REPRODUCED OR COPIED OR USED IN WHOLE OR IN PART AS THE BASIS FOR THE MANUFACTURE OR SALE OF ITEMS WITHOUT WRITTEN PERMISSION. COPYRIGHT © 1977, DIGITAL EQUIPMENT CORPORATION"

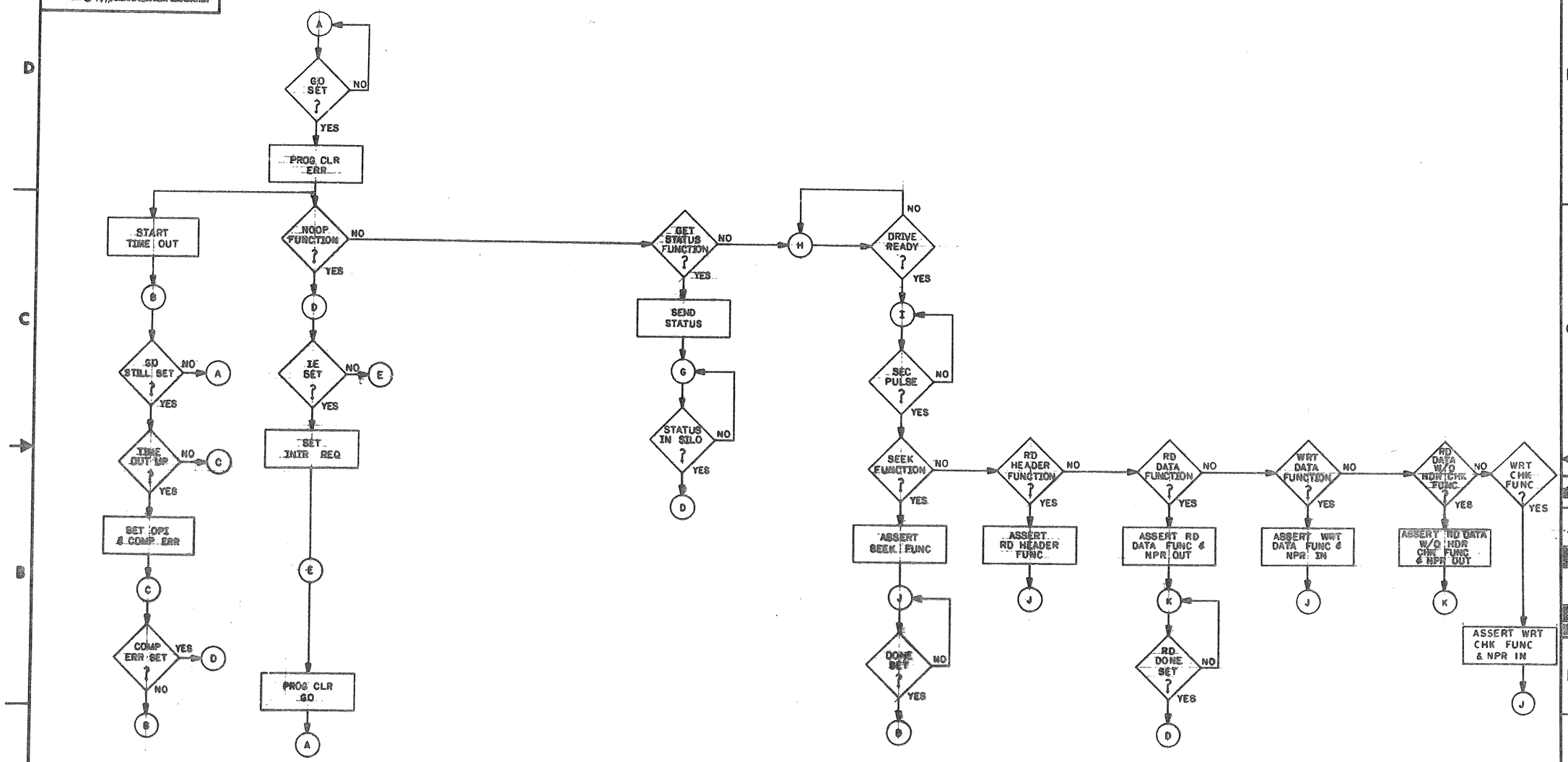

FUNCTION CONTROL FLOW

DRN.	3-4-77	FIRST USED ON: RL11
CHKD.	4-4-77	
ENG.	4-4-77	TITLE: RL11 CONTROLLER FLOW DIAGRAM
PROJ. ENGR.	4-4-77	
PROD.	4-4-77	
NEXT HIGHER ASSY.	B-DD-M7762-0	SIZE D · CODE FD · NUMBER M7762-0 · REV. E
SCALE	—	
SHEET 1 OF 3		DIST.

REVISIONS		
ECO	ENGINEER	REV
21777-00001		E
	C.LIU 23 SEPT 77	
	16-4-77	

M7762-0-3 D FD E

"THIS DRAWING AND SPECIFICATIONS, HEREIN, ARE THE PROPERTY OF DIGITAL EQUIPMENT CORPORATION AND SHALL NOT BE REPRODUCED OR COPIED OR USED IN WHOLE OR IN PART AS THE BASIS FOR THE MANUFACTURE OR SALE OF ITEMS WITHOUT WRITTEN PERMISSION. COPYRIGHT © 1977 DIGITAL EQUIPMENT CORPORATION"

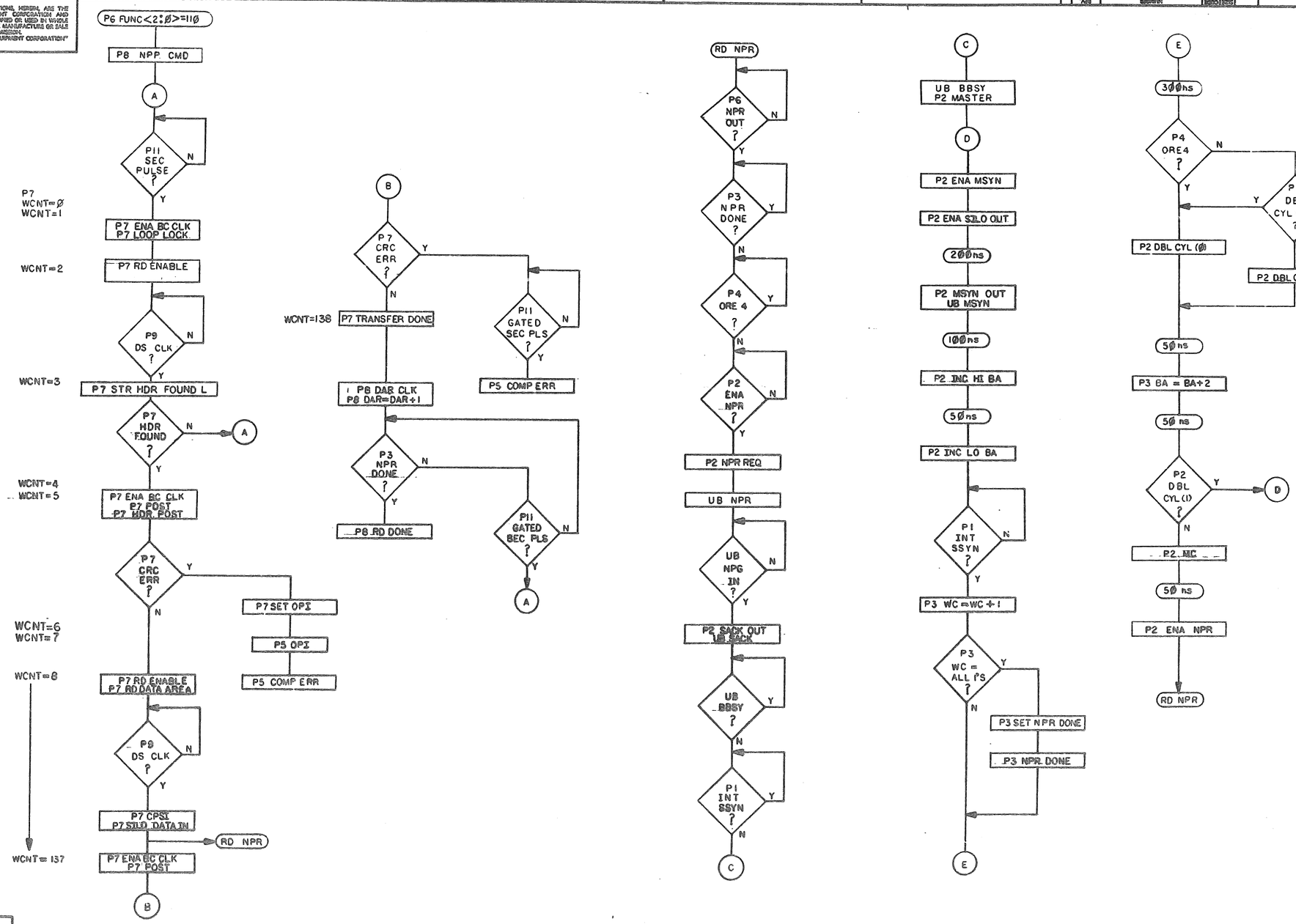

READ DATA COMMAND FORMAT & NPR FLOW

REVISIONS		
CHK	CHANGE NO.	REV.

TITLE	SIZE	CODE	NUMBER	REV.
RL11 CONTROLLER FLOW DIAGRAM	D	FD	M 7762-Ø-3	E
SCALE — / —	SHEET 2 OF 3		DIST.	

D FD M7762-Ø-3 E

"THIS DRAWING AND SPECIFICATIONS, HEREIN, ARE THE PROPERTY OF DIGITAL EQUIPMENT CORPORATION AND SHALL NOT BE REPRODUCED OR COPIED OR USED IN WHOLE OR IN PART AS THE BASIS FOR THE MANUFACTURE OR SALE OF ITEMS WITHOUT WRITTEN PERMISSION.
COPYRIGHT © 1977 DIGITAL EQUIPMENT CORPORATION"

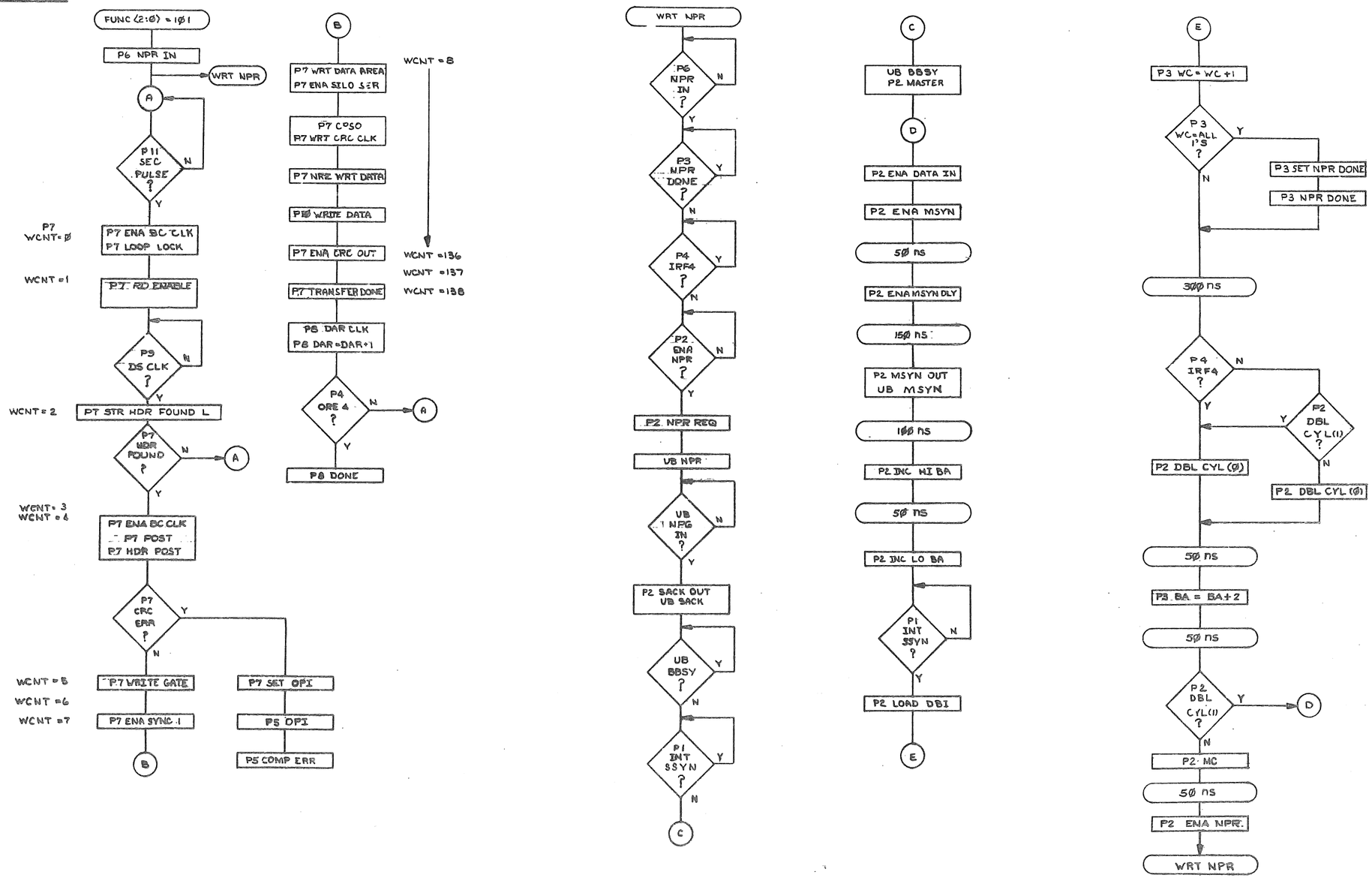

WRITE DATA COMMAND FORMAT & NPR FLOW

REVISIONS		
CHK	CHANGE NO.	REV.

TITLE	SIZE	CODE	NUMBER	REV.
RL11 CONTROLLER FLOW DIAGRAM	D	FD	M7762-0-3	E
SCALE — / —	SHEET 3 OF 3	DIST.		

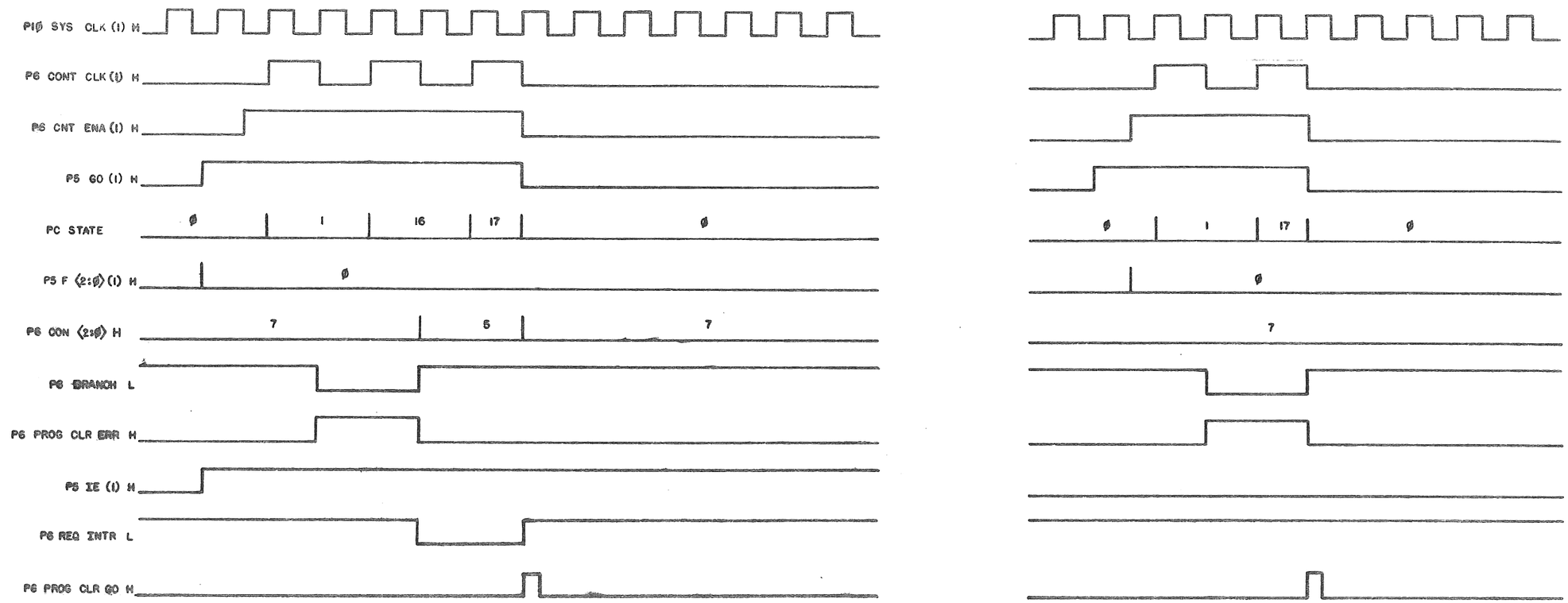

WITH IE SET

WITHOUT IE SET

NO OP FUNCTION TIMING

RL11

RL11 CONTROLLER TIMING DIAGRAM

DTD M7762-0-4

"THIS DRAWING AND SPECIFICATIONS, HEREIN, ARE THE PROPERTY OF DIGITAL EQUIPMENT CORPORATION AND SHALL NOT BE REPRODUCED OR COPIED OR USED IN WHOLE OR IN PART AS THE BASIS FOR THE MANUFACTURE OR SALE OF ITEMS WITHOUT WRITTEN PERMISSION. COPYRIGHT © 1977 DIGITAL EQUIPMENT CORPORATION"

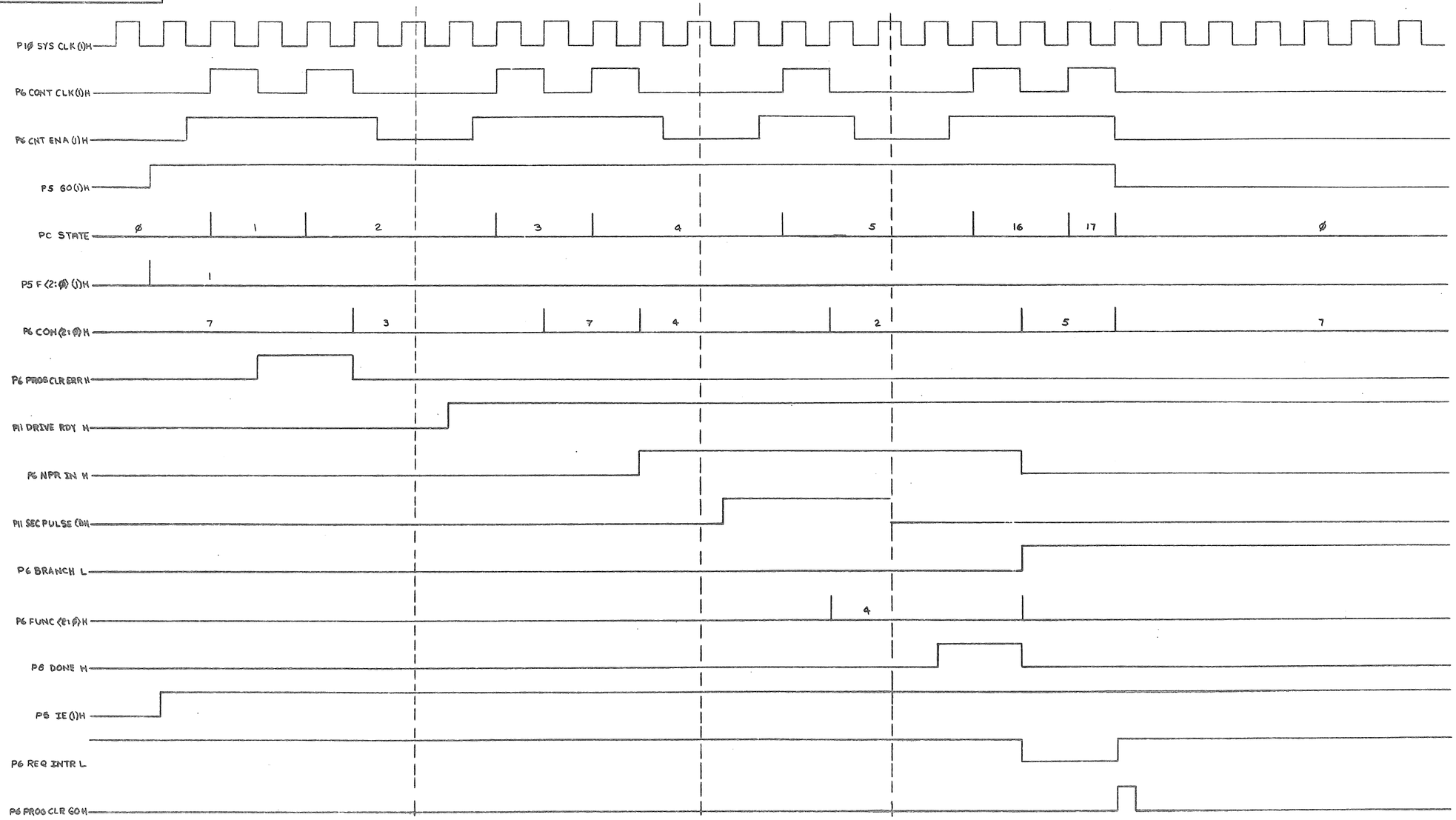

WRITE CHECK FUNCTION TIMING

REVISIONS		
CHK	CHANGE NO.	REV.

TITLE	SIZE	CODE	NUMBER	REV.
RL11 CONTROLLER TIMING DIAGRAM	D	TD	M7762-Ø-4	F
SCALE —/—	SHEET 2 OF 13		DIST.	

"THIS DRAWING AND SPECIFICATIONS, HEREIN, ARE THE PROPERTY OF DIGITAL EQUIPMENT CORPORATION AND SHALL NOT BE REPRODUCED OR COPIED OR USED IN WHOLE OR IN PART AS THE BASIS FOR THE MANUFACTURE OR SALE OF ITEMS WITHOUT WRITTEN PERMISSION.
COPYRIGHT © 1977 DIGITAL EQUIPMENT CORPORATION"

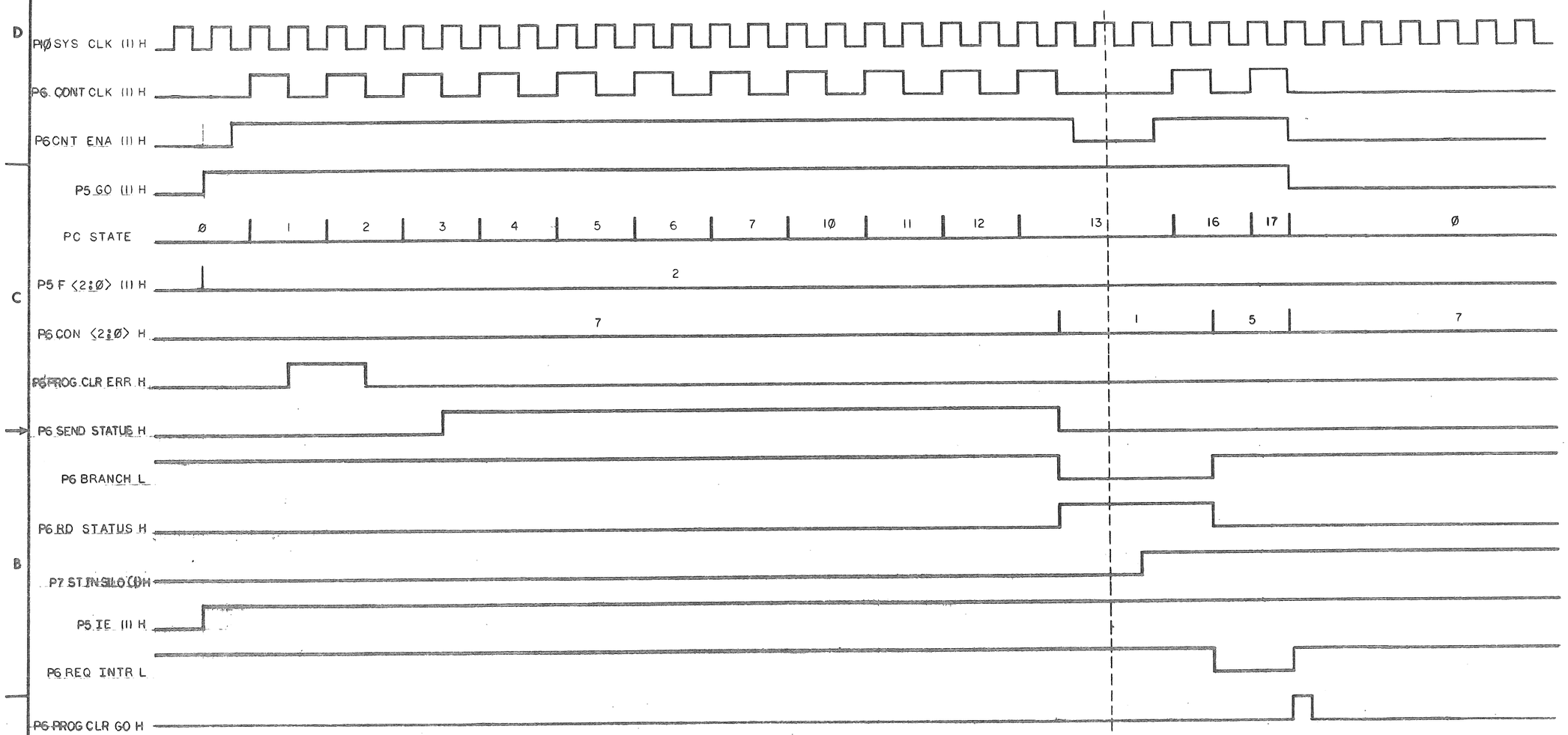

GET STATUS FUNCTION TIMING

REVISIONS		
CHK	CHANGE NO.	REV.

TITLE	SIZE	CODE	NUMBER	REV.
RL11 CONTROLLER TIMING DIAGRAM	D	TD	M7762-Ø-4	F

SCALE — SHEET 3 OF 13 DIST.

"THIS DRAWING AND SPECIFICATIONS, HEREIN, ARE THE PROPERTY OF DIGITAL EQUIPMENT CORPORATION AND SHALL NOT BE REPRODUCED OR COPIED OR USED IN WHOLE OR IN PART AS THE BASIS FOR THE MANUFACTURE OR SALE OF ITEMS WITHOUT WRITTEN PERMISSION. COPYRIGHT © 1977 DIGITAL EQUIPMENT CORPORATION"

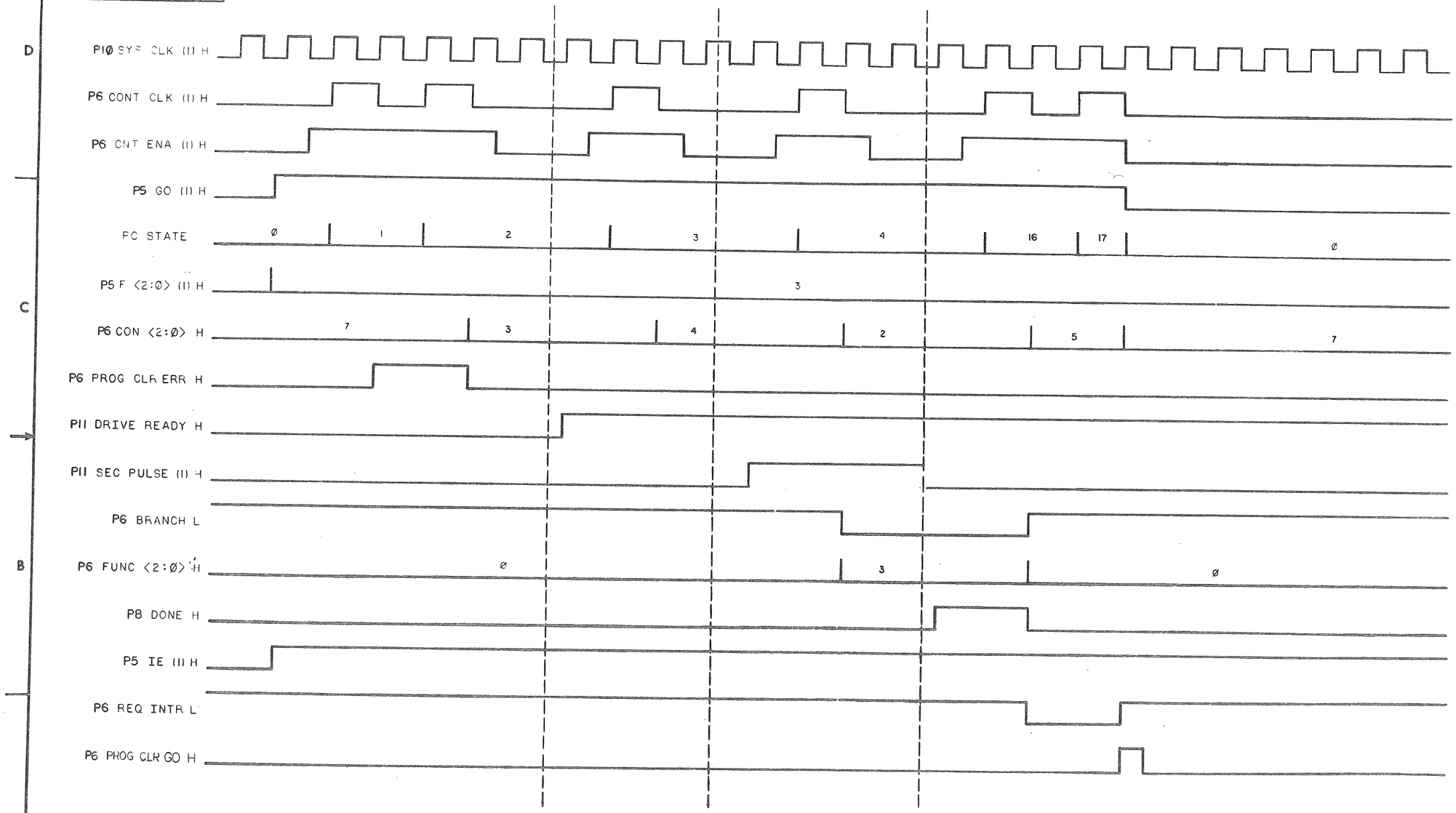

REVISIONS		
CHK	CHANGE NO.	REV.

SEEK FUNCTION TIMING

TITLE	SIZE	CODE	NUMBER	REV.
RL11 CONTROLLER TIMING DIAGRAM	D	TD	M7762-Ø-4	F
SCALE NONE	SHEET 4 OF 13		DIST.	

D TD M7762-Ø-4 F

"THIS DRAWING AND SPECIFICATIONS, HEREIN, ARE THE PROPERTY OF DIGITAL EQUIPMENT CORPORATION AND SHALL NOT BE REPRODUCED OR COPIED OR USED IN WHOLE OR IN PART AS THE BASIS FOR THE MANUFACTURE OR SALE OF ITEMS WITHOUT WRITTEN PERMISSION. COPYRIGHT © DIGITAL EQUIPMENT CORPORATION"

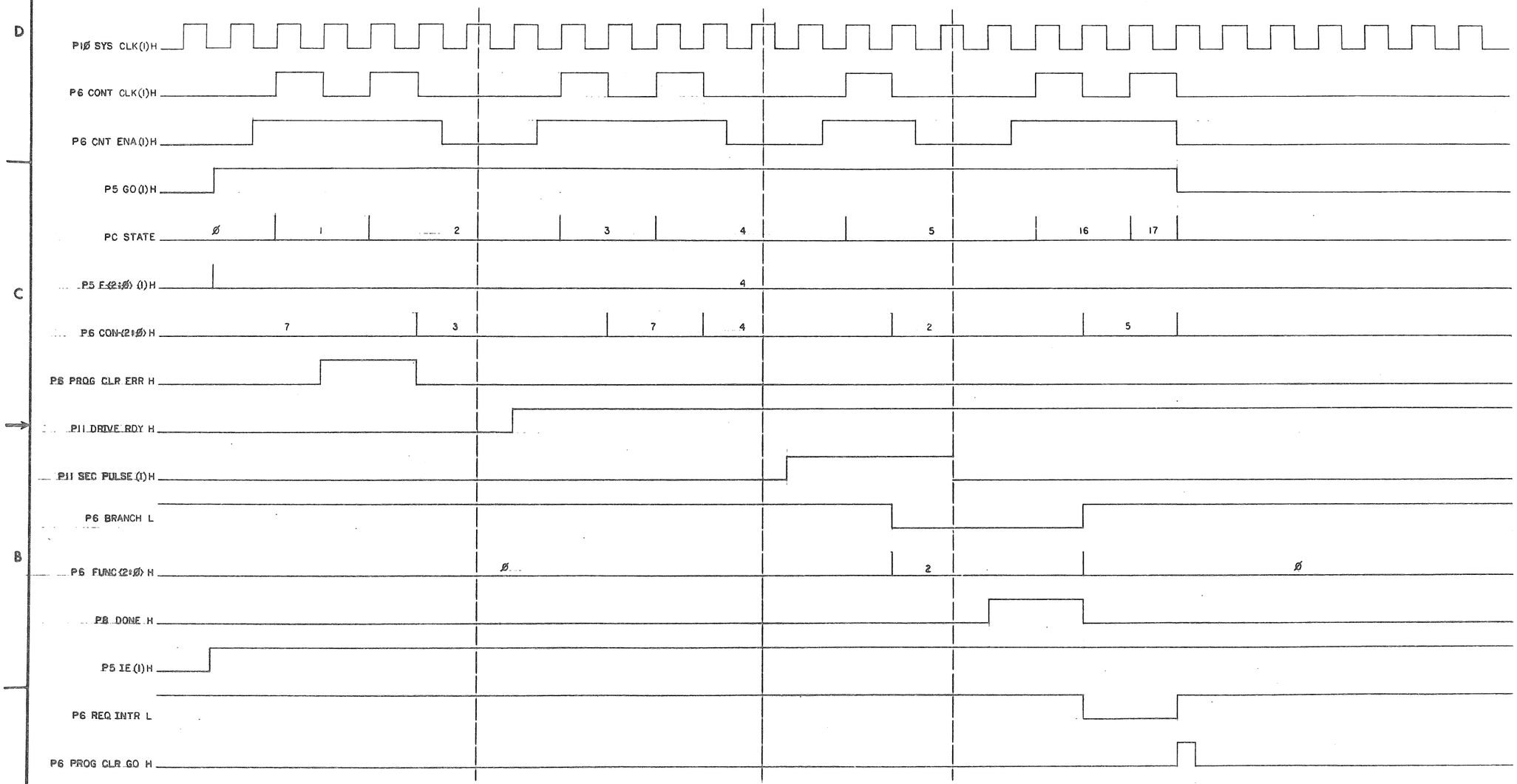

READ HEADER FUNCTION TIMING

REVISIONS		
CHK	CHANGE NO.	REV.

TITLE	SIZE	CODE	NUMBER	REV.
RLII CONTROLLER TIMING DIAGRAM	D	TD	M7762-Ø-4	F
SCALE —/—/—	SHEET 5 OF 13		DIST.	

"THIS DRAWING AND SPECIFICATIONS, HEREIN, ARE THE PROPERTY OF DIGITAL EQUIPMENT CORPORATION AND SHALL NOT BE REPRODUCED OR COPIED OR USED IN WHOLE OR IN PART AS THE BASIS FOR THE MANUFACTURE OR SALE OF ITEMS WITHOUT WRITTEN PERMISSION. COPYRIGHT © 1977 DIGITAL EQUIPMENT CORPORATION"

✳ 6 FOR READ DATA FUNCTION
7 FOR READ DATA WITHOUT HEADER

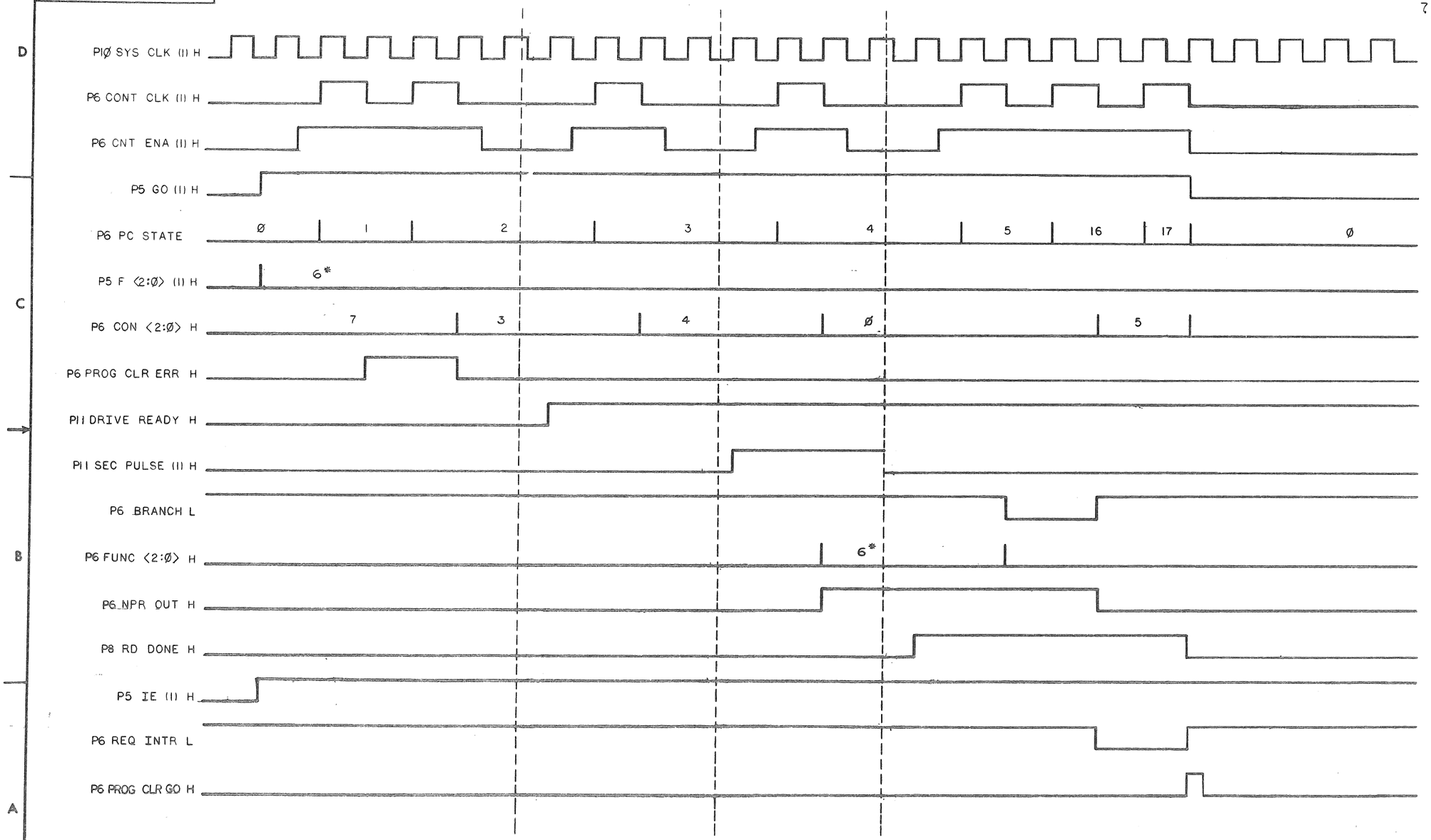

REVISIONS		
CHK	CHANGE NO.	REV.

READ DATA FUNCTION TIMING

TITLE	SIZE	CODE	NUMBER	REV.
RL11 CONTROLLER TIMING DIAGRAM	D	TD	M7762-Ø-4	F
SCALE NONE / SHEET 6 OF 13	DIST.			

DEC FORM NO. DEC 123

"THIS DRAWING AND SPECIFICATIONS, HEREIN, ARE THE PROPERTY OF DIGITAL EQUIPMENT CORPORATION AND SHALL NOT BE REPRODUCED OR COPIED OR USED IN WHOLE OR IN PART AS THE BASIS FOR THE MANUFACTURE OR SALE OF ITEMS WITHOUT WRITTEN PERMISSION.
COPYRIGHT © 1977 DIGITAL EQUIPMENT CORPORATION"

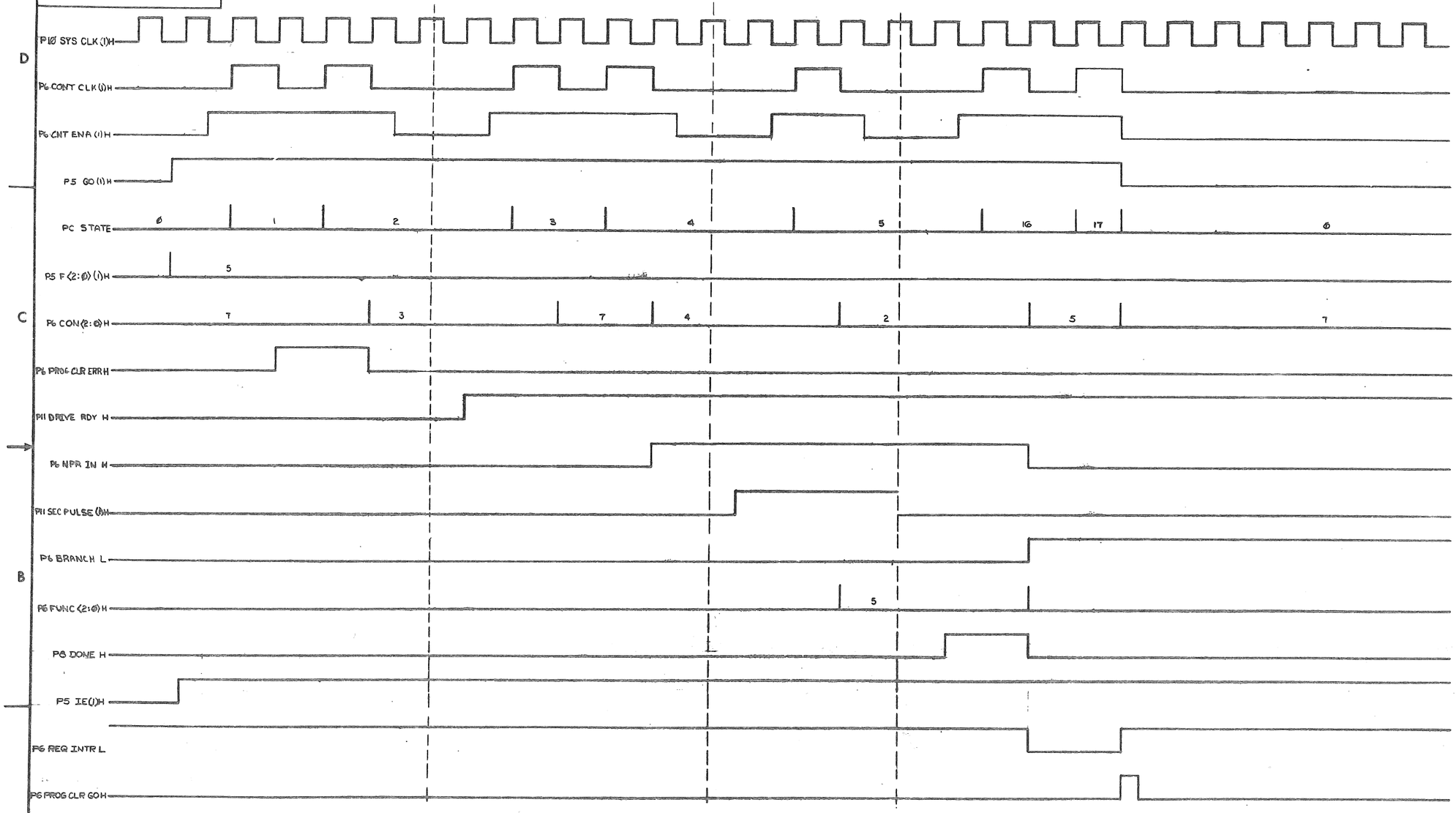

REVISIONS		
CHK	CHANGE NO.	REV.

WRITE DATA FUNCTION TIMING

TITLE	SIZE	CODE	NUMBER	REV.
RL11 CONTROLLER TIMING DIAGRAM	D	TD	M7762-0-4	F

SCALE — SHEET 7 OF 13 DIST.

DEC FORM NO. BRD 130

"THIS DRAWING AND SPECIFICATIONS, HEREIN, ARE THE PROPERTY OF DIGITAL EQUIPMENT CORPORATION AND SHALL NOT BE REPRODUCED OR COPIED OR USED IN WHOLE OR IN PART AS THE BASIS FOR THE MANUFACTURE OR SALE OF ITEMS WITHOUT WRITTEN PERMISSION. COPYRIGHT © 1977 DIGITAL EQUIPMENT CORPORATION"

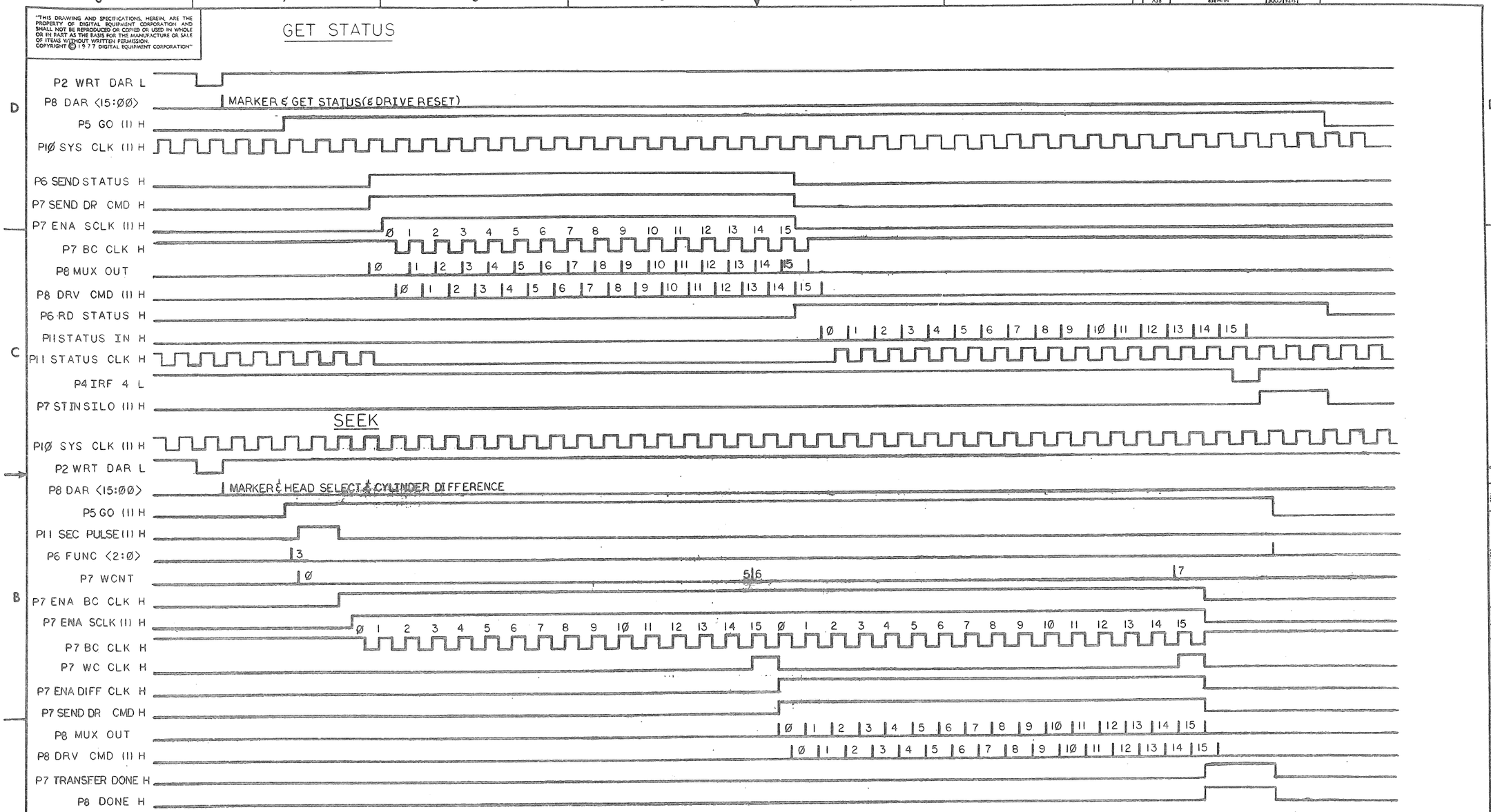

REVISIONS		
CHK	CHANGE NO.	REV.

GET STATUS & SEEK FORMAT TIMING

TITLE	SIZE	CODE	NUMBER	REV.
RL11 CONTROLLER TIMING DIAGRAM	D	TD	M7762-Ø-4	F
SCALE —	SHEET 8 OF 13		DIST.	

DEC FORM NO. BRD 130

"THIS DRAWING AND SPECIFICATIONS, HEREIN, ARE THE PROPERTY OF DIGITAL EQUIPMENT CORPORATION AND SHALL NOT BE REPRODUCED OR COPIED OR USED IN WHOLE OR IN PART AS THE BASIS FOR THE MANUFACTURE OR SALE OF ITEMS WITHOUT WRITTEN PERMISSION. COPYRIGHT © 1977 DIGITAL EQUIPMENT CORPORATION"

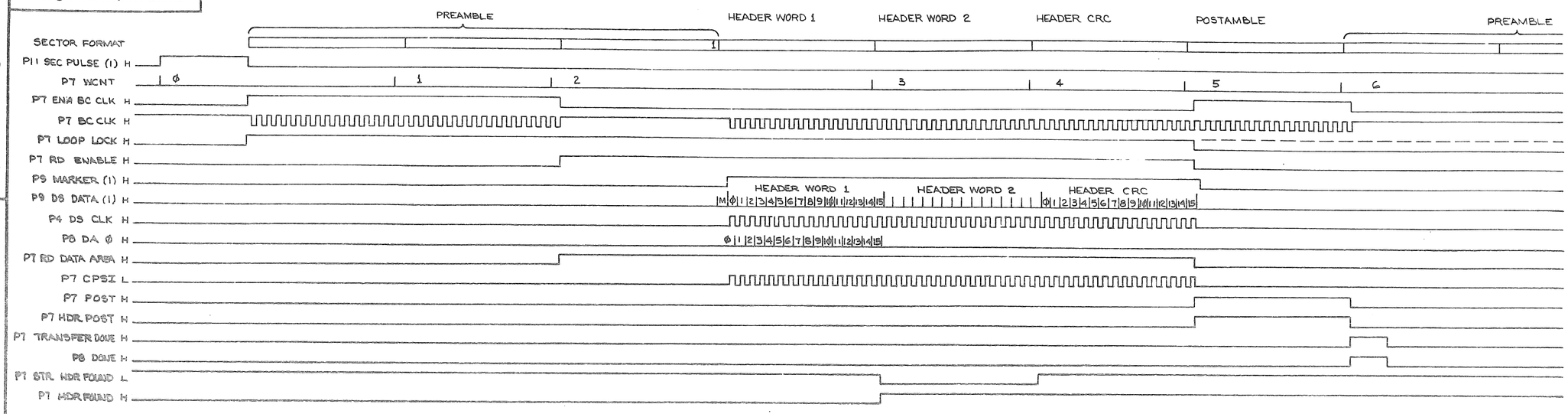

NOTE 1 THESE SIGNALS ARE ONLY ASSERTED DURING READ HEADER COMMAND

NOTE 2 THESE SIGNALS ARE ONLY ASSERTED DURING HEADER COMPARE

NOTE 3 ASSERTION OF LOOP LOCK IS CONTINUED DURING READ DATA COMMAND

READ HEADER AND HEADER COMPARE FORMAT TIMING

REVISIONS		
CHK.	CHANGE NO.	REV.

TITLE	SIZE	CODE	NUMBER	REV.
RL11 CONTROLLER TIMING DIAGRAM	D	TD	M7762-Ø-4	F
SCALE —	SHEET 9 OF 13		DIST.	

"THIS DRAWING AND SPECIFICATIONS, HEREIN, ARE THE PROPERTY OF DIGITAL EQUIPMENT CORPORATION AND SHALL NOT BE REPRODUCED OR COPIED OR USED IN WHOLE OR IN PART AS THE BASIS FOR THE MANUFACTURE OR SALE OF ITEMS WITHOUT WRITTEN PERMISSION.
COPYRIGHT © 1977 DIGITAL EQUIPMENT CORPORATION"

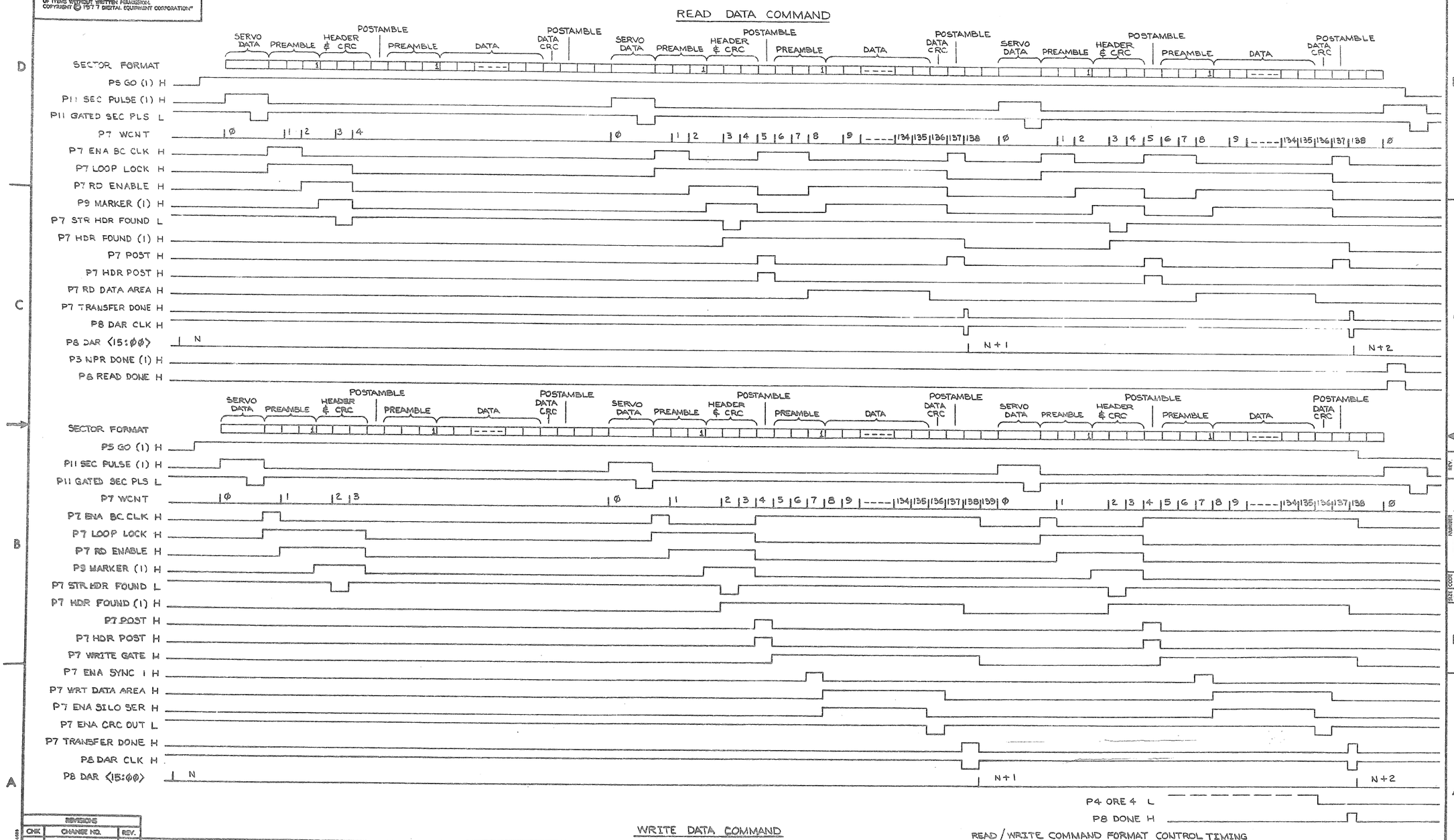

REVISIONS		
CHK	CHANGE NO.	REV.

TITLE	SIZE	CODE	NUMBER	REV.
RL11 CONTROLLER TIMING DIAGRAM	D	TD	M7762-Ø-4	F
SCALE	SHEET Ø OF 13		DIST.	

"THIS DRAWING AND SPECIFICATIONS, HEREIN, ARE THE PROPERTY OF DIGITAL EQUIPMENT CORPORATION AND SHALL NOT BE REPRODUCED OR COPIED OR USED IN WHOLE OR IN PART AS THE BASIS FOR THE MANUFACTURE OR SALE OF ITEMS WITHOUT WRITTEN PERMISSION. COPYRIGHT © 1977 DIGITAL EQUIPMENT CORPORATION"

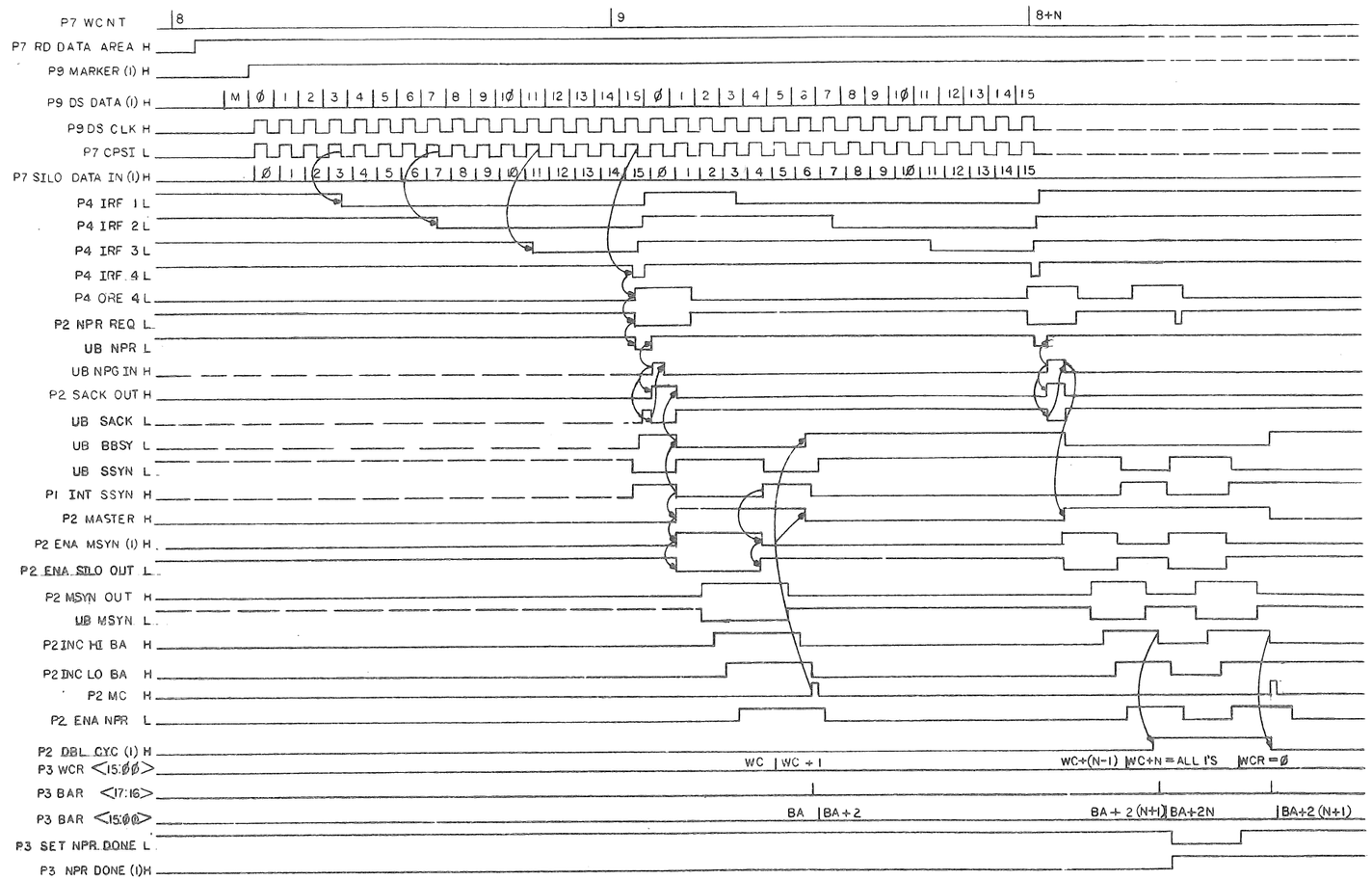

REVISIONS		
CHK	CHANGE NO.	REV.

READ DATA NPR & SILO TIMING

TITLE	SIZE	CODE	NUMBER	REV.
RL11 CONTROLLER TIMING DIAGRAM	D	TD	M 7762-Ø-4	F

SCALE —/—/— SHEET 11 OF 13 DIST.

"THIS DRAWING AND SPECIFICATIONS, HEREIN, ARE THE PROPERTY OF DIGITAL EQUIPMENT CORPORATION AND SHALL NOT BE REPRODUCED OR COPIED OR USED IN WHOLE OR IN PART AS THE BASIS FOR THE MANUFACTURE OR SALE OF ITEMS WITHOUT WRITTEN PERMISSION.
COPYRIGHT © 1977 DIGITAL EQUIPMENT CORPORATION"

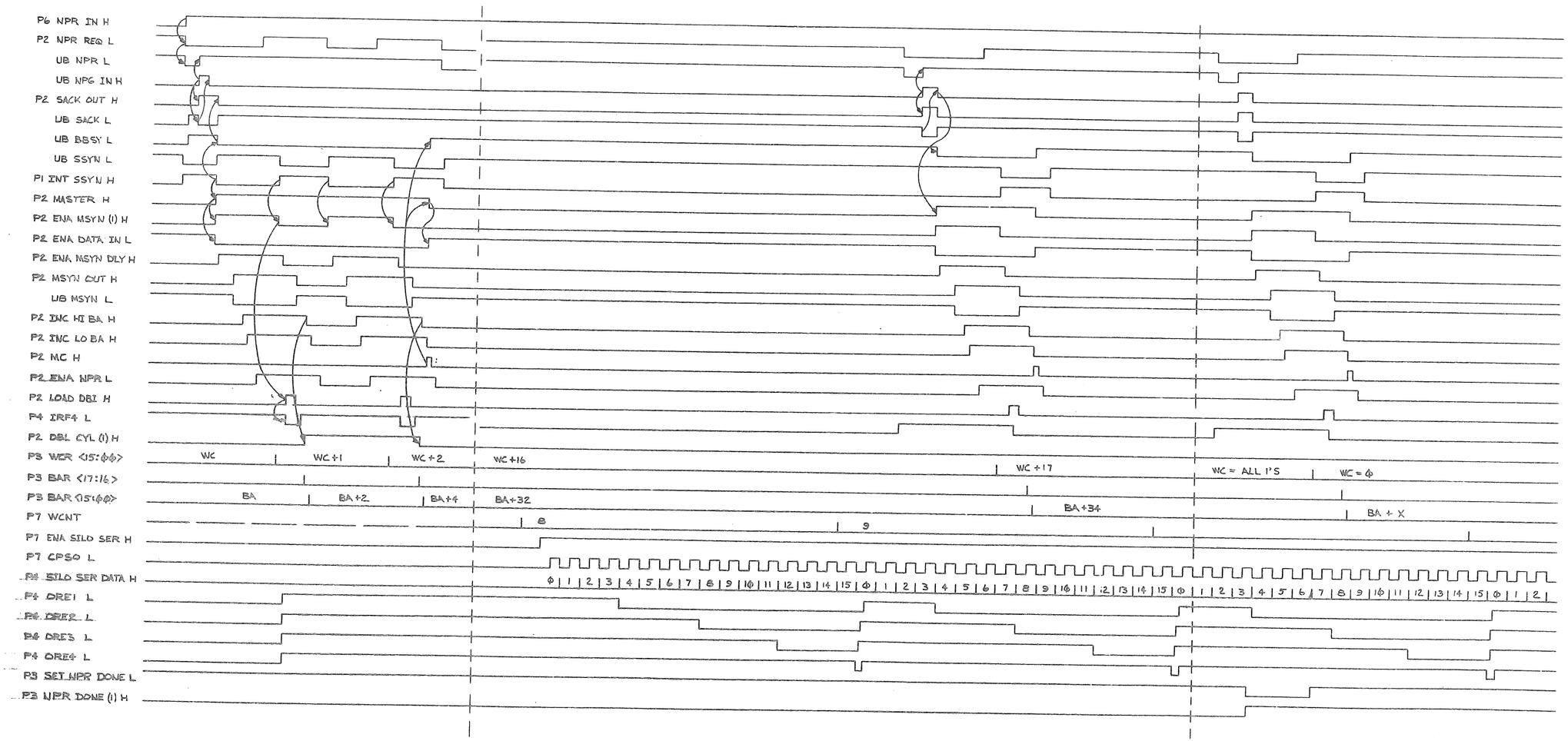

REVISIONS		
CHK	CHANGE NO.	REV.

WRITE DATA NPR & SILO TIMING

TITLE	SIZE	CODE	NUMBER	REV.
RLII CONTROLLER TIMING DIAGRAM	D	TD	M7762-0-4	F
SCALE — / —	SHEET 12 OF 13.	DIST.		

"THIS DRAWING AND SPECIFICATIONS, HEREIN, ARE THE PROPERTY OF DIGITAL EQUIPMENT CORPORATION AND SHALL NOT BE REPRODUCED OR COPIED OR USED IN WHOLE OR IN PART AS THE BASIS FOR THE MANUFACTURE OR SALE OF ITEMS WITHOUT WRITTEN PERMISSION. COPYRIGHT © 1977 DIGITAL EQUIPMENT CORPORATION"

WRITE CHECK COMMAND

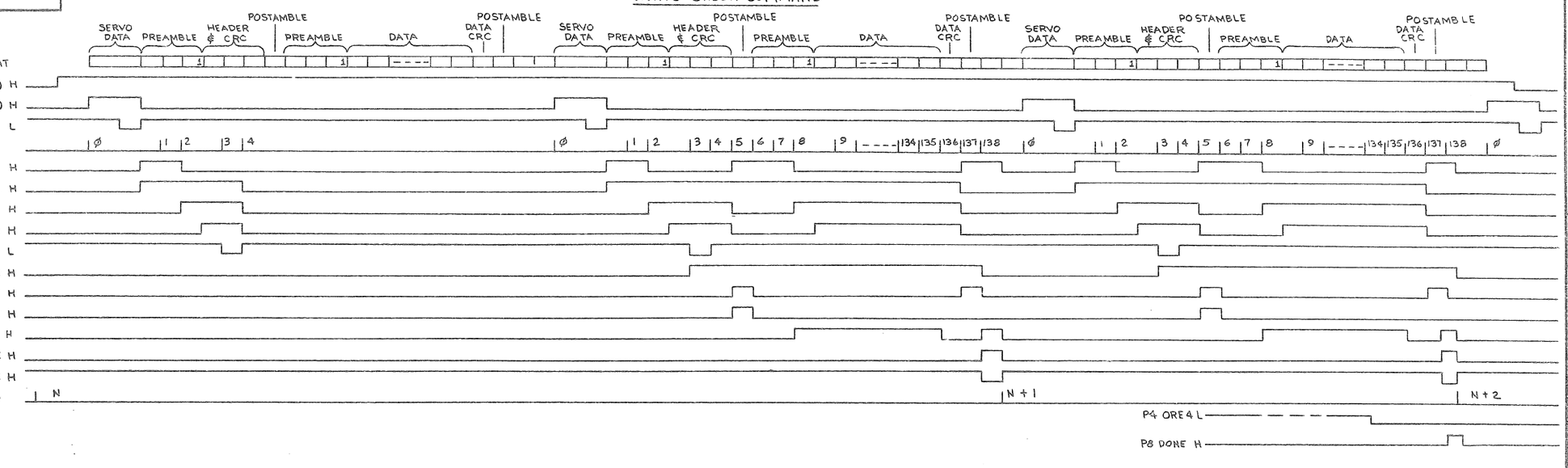

WRITE CHECK COMMAND FORMAT CONTROL TIMING

REVISIONS		
CHK	CHANGE NO.	REV.

TITLE	SIZE	CODE	NUMBER	REV.
RL11 CONTROLLER TIMING DIAGRAM	D	TD	M7762-0-4	F
SCALE —/—/—	SHEET 13 OF 13		DIST.	

DIGITAL EQUIPMENT CORPORATION
MAYNARD, MASSACHUSETTS

PARTS LIST

MADE BY	F. CARBERRY	CHECKED	R. CARBERRY	SECTION	1
DATE	2 JUN 76	DATE	2 JUN 76		
ENG	C. LIU	PROD	R. STROTT	ISSUED SECT.	1
DATE	12 APR 77	DATE	12 APR 77		

ITEM NO.	DWG NO./PART NO.	DESCRIPTION	QUANTITY VARIATION RL11-0
1	E-UA-RL11-0-0	RL11 CONTROLLER ASSEMBLY	1
2	MP00526	FIELD MAINTENANCE PRINT SET (RL11-AK)	1
3	MP00153	FIELD MAINTENANCE PRINT SET (RL11)	1
4	23-751A9	M9312 ROM (BOOT STRAP BOARD)	1
5	9906228	PACKAGING CONTAINER (FOR ITEM 4)	1

TITLE	ASSY NO.	SIZE	CODE	NUMBER	REV	ECO NO.
RL11 SHIPPING LIST	B-DD-RL11-0	A	PL	RL11-0	C	RL11AK-CZ002
	SHEET 1 OF 1	DIST				

DEC FORM
DRA 110