digital

DZ11

Engineering Drawings

Digital Equipment Corporation

FIELD MAINTENANCE PRINT SET

TABLE OF CONTENTS

UNIT VARIATIONS COVERED BY THIS PRINT SET
DZ11-A
DZ11-E

DZ11, VOL 1

Field Maintenance Print Set

Digital Equipment Corporation

PRINT SET ORDER NUMBER MPØØ132

REVISIONS		
REV.		
CHG. NO.		
DATE		

USED ON OPTION/MODEL	
DZ11	
SHEET I OF 1	

DRN. K. DAVIS	DATE 5/5/76	TITLE: DZ11 FIELD MAINTENANCE PRINT SET	digital
CHK'D P. Cappalonga	DATE 5-19-76		
PROJ. ENG.	DATE		
FIELD SERV. David Butler	DATE 5-18-76		

SIZE	CODE	NUMBER	REV.
B	TC	DZ11-Ø-6	
DIST.			

EN-01124-16-N675-(327)

DRB 124

SIZE	CODE	NUMBER	REV.
B	DD	M7819-0	D

DRAWING NO.	NO. OF SHTS	PART NO.	DESCRIPTION	REVISIONS			
D-UA-M7819-0-0	3		8 LINE EIA ASYNCHRONOUS MUX	B	B	D	E
B-PL-M7819-0-0	4		8 LINE EIA ASYNCHRONOUS MUX	B	C	D	E
D-CS-M7819-0-1	15		8 LINE EIA ASYNCHRONOUS MUX	B	C	D	E
D-AH-M7819-0-5	1		8 LINE EIA ASYNCHRONOUS MUX	B	B	C	D
		5011820	ETCHED BOARD	C	C	C	D
M7819-0-L			P.C. DESIGN DATA BASE	REF	–	–	–
M7819-0-PL			INSERTION P/L DATA BASE	REF	–	–	–
B-MH-M7819-0-6	1		MODULE ECO HISTORY	REF	–	–	–
D-BD-M7819-0-8	1		M7819 BLOCK DIAGRAM	A	A	A	A

NOTES:

REVISIONS		
DATE	CHG NO.	REV.
7-Jun-76	00001	B
8-76	00002	C
11-Oct-76	00003	D

digital

USED ON OPTION/MODEL

DRN	R. Koppenol	3-2-76
CHK'D	R. Koppenol	3-2-76
ENG	[illegible]	3-2-76
PROD.	R. Wall	3-2-76

TITLE 8 LINE EIA ASYNCHRONOUS MUX

SIZE	CODE	NUMBER	REV.
B	DD	M7819-0	D

SHEET 1 OF

DRB 126 EN-01149-16-N176(325)

DIGITAL EQUIPMENT CORPORATION
PARTS LIST

MADE BY R. KOPPENAL
DATE 3-1-76
ENG [illegible]
DATE 3-2-76

CHECKED [illegible]
DATE 3-2-76
PROD R. Wall
DATE 3-2-76

SECTION
ISSUED SECTION

NOTES:

ITEM NO.	DRAWING NO.	PART NO.	DESCRIPTION	QUANTITY/VARIATION	REF DESIGNATION
1.		5011820	ETCH BOARD	1	
2.		1000025	CAP, 560PF, 100V, 5%	2	C92, C53
3.		1000018	CAP, 120PF, 100V, 5%	2	C99, C96
4.		1000024	CAP, 470PF, 100V, 5%	25	C93, C100-122, C131,
5.		1000042	CAP, 1000PF, 100V, 5%	1	C98
6.		1001610-00	CAP, 01UF, 50V	91	C1-C52, C54-C91, C130
7.		1000010	CAP, 39PF, 100V, 5%	1	C97
8.		1005306	CAP, 6.8UF, 35V, 10%	6	C123-C126, C128, C129
9.		1000021	CAP, 220PF, 100V, 5%	1	C95
10.		1000023	CAP, 330PF, 100V, 5%	1	C94
11.		1105796	DIODE, IN4004	2	D1, D5
12.		1109943	DIODE, IN4733A	2	D2, D6
13.		1103340	DIODE, IN4736A	2	D3, D7
14.		1101938	DIODE, IN4370A	2	D4, D8
15.		1905547	IC, 7474	1	E96
16.		1909705	IC, 8881	1	E72
17.		1910091	IC, 7437	2	E24, E68
18.		1910322	IC, 1488L	4	E7 - E10
19.		1910323	IC, 1489L	6	E1 - E6
20.		1910454	IC, 9318	1	E82
21.		1910459-01	IC, 1602 (UART)	8	E44 - E51

E.C.O. NO. 00001 00002 00003

TITLE 8 LINE EIA ASYNCHRONOUS MUX

ASSY NO. D-UA-M7819-Ø-Ø
SHEET 1 OF 4

SIZE	CODE	NUMBER	REV.
B	PL	M7819-Ø-Ø	E

INSERTION PARTS LIST DATA BASE REV

DIGITAL EQUIPMENT CORPORATION

PARTS LIST

MADE BY R. KOPPENAL
DATE 3-1-76
ENG Robert A. Cormier
DATE 3-2-76

CHECKED Robert A. Cormier
DATE 3-2-76
PROD R. Wall
DATE 3-2-76

SECTION
ISSUED SECTION

NOTES:

ITEM NO.	DRAWING NO.	PART NO.	DESCRIPTION	QUANTITY/VARIATION	REF DESIGNATION
22.		1910951	IC, 9602	2	E78, E106
23.		1911116	IC, 8837	1	E70
24.		1911579	IC, 8641	4	E28, E29, E36, E37
25.		1912083	IC, 8647	2	E89, E90
26.		1912395	IC, 8136	3	E61, E71, E80
27.		1912799	IC, 74LS00	4	E23, E73, E76, E99
28.		1912801	IC, 74LS02	1	E108
29.		1912803	IC, 74LS04	5	E13, E14, E86, E101, E12
30.		1912805	IC, 74LS08	4	E63, E65,E87, E107
31.		1912807	IC, 74LS10	1	E97
32.		1912811	IC, 74LS21	1	E69
33.		1912816	IC, 74LS32	2	E100, E84
34.		1912824	IC, 74LS74	4	E77, E85, E88, E109
35.		1912830	IC, 74LS90	1	E66
36.		1912842	IC, 74LS138	2	E74, E75
37.		1912844	IC, 74LS151	2	E91, E92
38.		1912845	IC, 74LS153	8	E30 - E33, E38 - E41
39.		1912846	IC, 74LS155	3	E83, E94, E95
40.		1912847	IC, 74LS157	5	E19-22, E102
41.		1912853	IC, 74LS175	13	E15-18, E26, E27, E34, E35, E42, E43, E93, E98, E104

E.C.O. NO.

TITLE 8 LINE EIA ASYNCHRONOUS MUX

ASSY NO. D-UA-M7819-Ø-Ø
SHEET 2 OF 4

SIZE B | CODE PL | NUMBER M7819-Ø-Ø | REV. E

INSERTION PARTS LIST DATA BASE REV

EN-01140-16-N1075-(325) DRB 125

DIGITAL EQUIPMENT CORPORATION
PARTS LIST

MADE BY R. KOPPENAL DATE 3-1-76	CHECKED [illegible] DATE 3-2-76	SECTION
ENG [illegible] DATE 3-2-76	PROD R. Wall DATE 3-2-76	ISSUED SECTION

NOTES:

ITEM NO.	DRAWING NO.	PART NO.	DESCRIPTION	QUANTITY/VARIATION	REF DESIGNATION
42.		1912860	IC, 74LS259	3	E62, E64, E103
43.		2111188	IC, 3341	4	E57-60
44.		2112623	IC, 5016	4	E53-56
45.		1912854	IC, 74LS193	2	E79, E105
46.		1300202	RES, 47 OHM, 1/4W, 5%	5	R1-5
47.		1300229	RES, 100 OHM, 1/4W, 5%	3	R13, R15, R67
48.		1300309	RES, 390 OHM, 1/4W, 5%	1	R30.
49.		1300365	RES, 1K, 1/4W, 5%	5	R11, R12, R14, R27, R61
50.		1300479	RES, 10K, 1/4W, 5%	17	R16-25, R31-36, R62
51.		1300510	RES, 33K, 1/4W, 10%	24	R37-60
52.		1301322	RES, 180 OHM, 1/4W, 5%	4	R28, R29, R63, R26
53.		1301874	RES, 5.6K, 1/4W, 5%	2	R64, R65
54.		1302177	RES, 47K, 1/4W 5%	1	R66
55.		1209838	PRIORITY SOCKET 16 PIN	1	E52
56.		1209941-03	LEFT LATCH FOR BERG PC SOCKET HOUSING	1	
57.		1209941-04	RIGHT LATCH FOR BERG PC SOCKET HOUSING	1	
58.		1209941-07	50 PIN BERG PC SOCKET HOUSING	1	J1
59.		1210711-02	HANDLE ASSLY	1	
60.		1211164-04	SWITCH, 8 POSITION	1	E11
61.		1211164-06	SWITCH, 10 POSITION	1	E81

E.C.O. NO.

TITLE	ASSY NO.	SIZE	CODE	NUMBER	REV.
8 LINE EIA ~~ASYNCHRONOUS~~ MUX	D-UA-M7819-Ø-Ø	B	PL	M7819-Ø-Ø	E
	SHEET 3 OF 4	INSERTION PARTS LIST DATA BASE REV			

EN-01140-16-N1075-(325) DRB 125

DIGITAL EQUIPMENT CORPORATION

PARTS LIST

MADE BY R. Koppenal	CHECKED Robert A. Armey	SECTION
DATE 3-1-76	DATE 3-2-76	
ENG Robert A. Armey	PROD R. Wall	ISSUED SECTION
DATE 3-2-76	DATE 3-2-76	

ITEM NO.	DRAWING NO.	PART NO.	DESCRIPTION	QUANTITY/VARIATION	REF DESIGNATION
62		5408778	PRIORITY 5 INSERT	1	PLUG INTO E52
63		9006735	SPLIT LUG	2	
64		9006732	EYELETS	2	
65		9009185	JUMPER, INSULATED	1	W1
66		1811660-02	OSCILLATOR, 5.068 MHZ	1	E67

NOTES:

E.C.O. NO.

TITLE 8 LINE EIA ASYNCHRONOUS MUX

ASSY NO. D-UA-M7819-Ø-Ø

SHEET 4 OF 4

SIZE B | CODE PL | NUMBER M7819-Ø-Ø | REV. E

INSERTION PARTS LIST DATA BASE REV

EN-01140-16-N1075-(325) DRB 125

COMPONENT SIDE VIEW

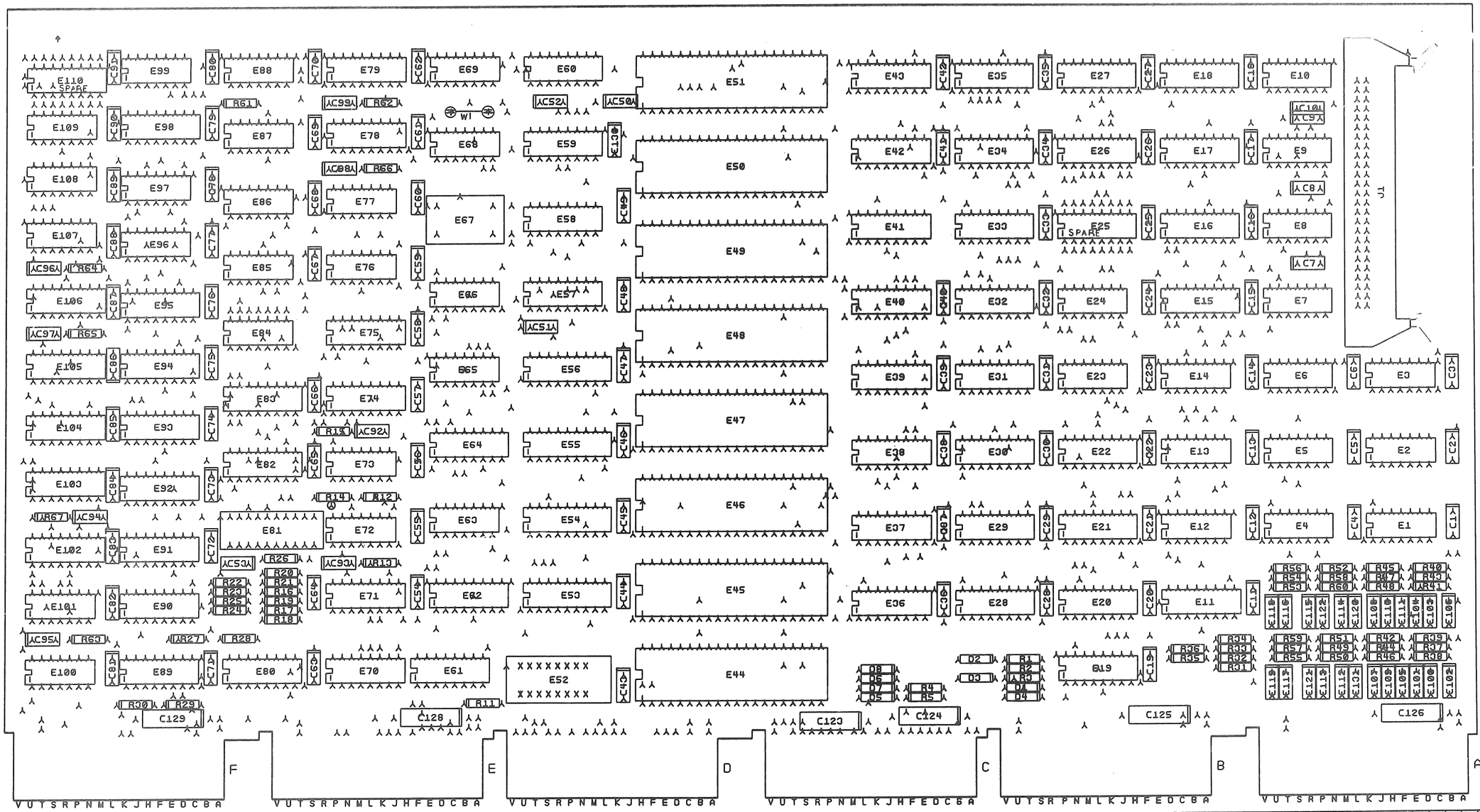

NOTES:

CHK	CHANGE NO	REV
	47619	E

SIGNATURES	DATE
DRN.	
CHK'D.	
ENG.	
PROJ.ENG.	
PROD.	
SCALE	
SHT. 1 OF 3	
NEXT HIGHER ASSY.	

ETCH REV. 3
P.C. DESIGN DATA BASE REV.

digital

TITLE

SIZE	CODE	NUMBER	REV
D	UA	M7819-0-0	E

1 MS#

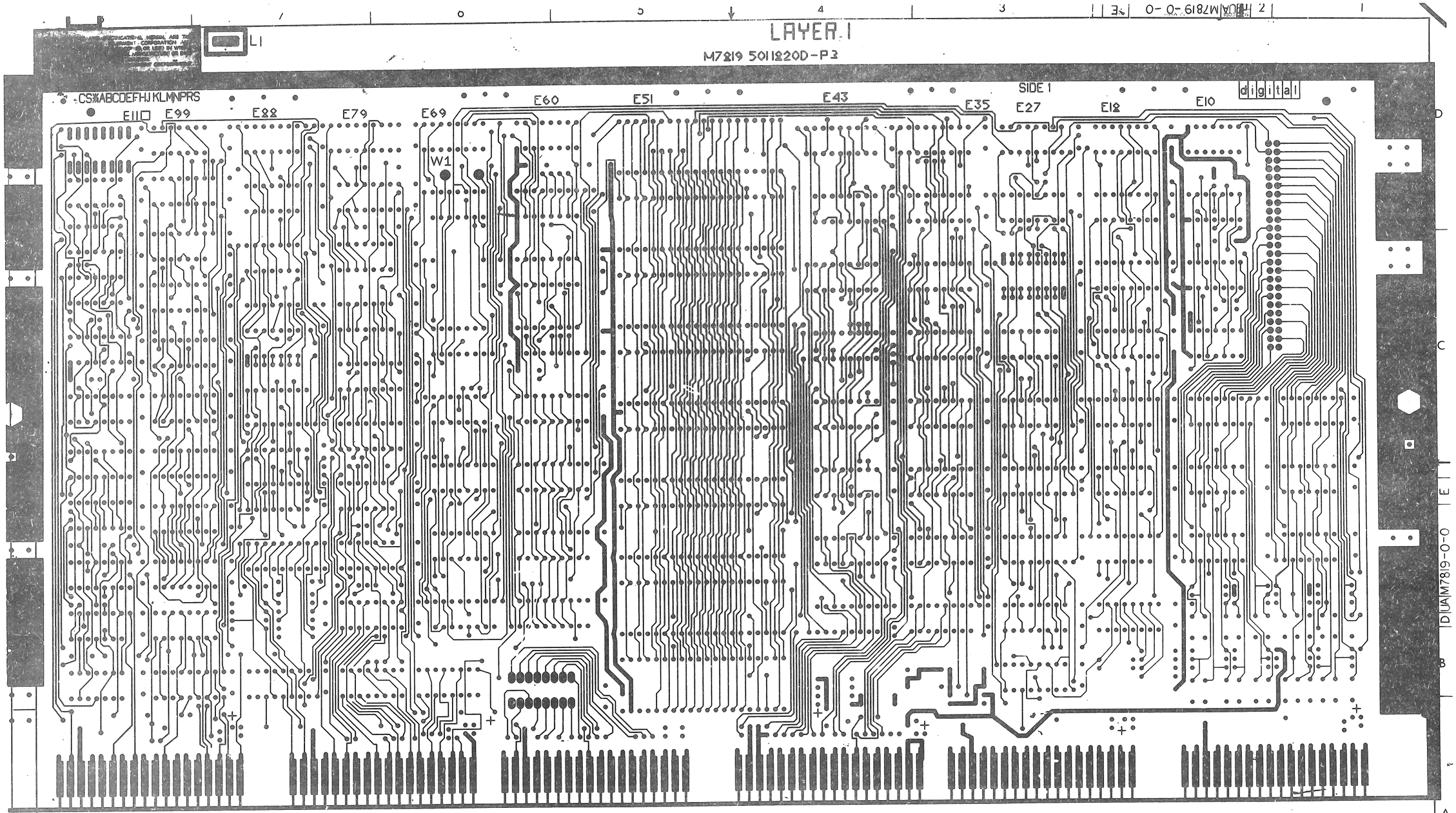

REVISIONS		
CHK	CHANGE NO.	REV.

TITLE	SIZE	CODE	NUMBER	REV.
8LINE EIA ASYNCHRONOUS MUX	D	UA	M7819-0-0	E
SCALE	SHEET 2 OF 3		DIST.	

LAYER 4
L4
SIDE 2
M7819 5011220D-P3
8 LINE EIA ASYNCHRONOUS MUX
D UA M7819-0-0 E
REVISIONS
CHK
CHANGE NO.
REV.
TITLE
8LINE EIA ASYNCHRONOUS MUX
SIZE
CODE
NUMBER
REV.
D
UA
M7819-0-0
E
SCALE
SHEET 3 OF 3
DIST.
8
7
6
5
4
3
2
1
A
A

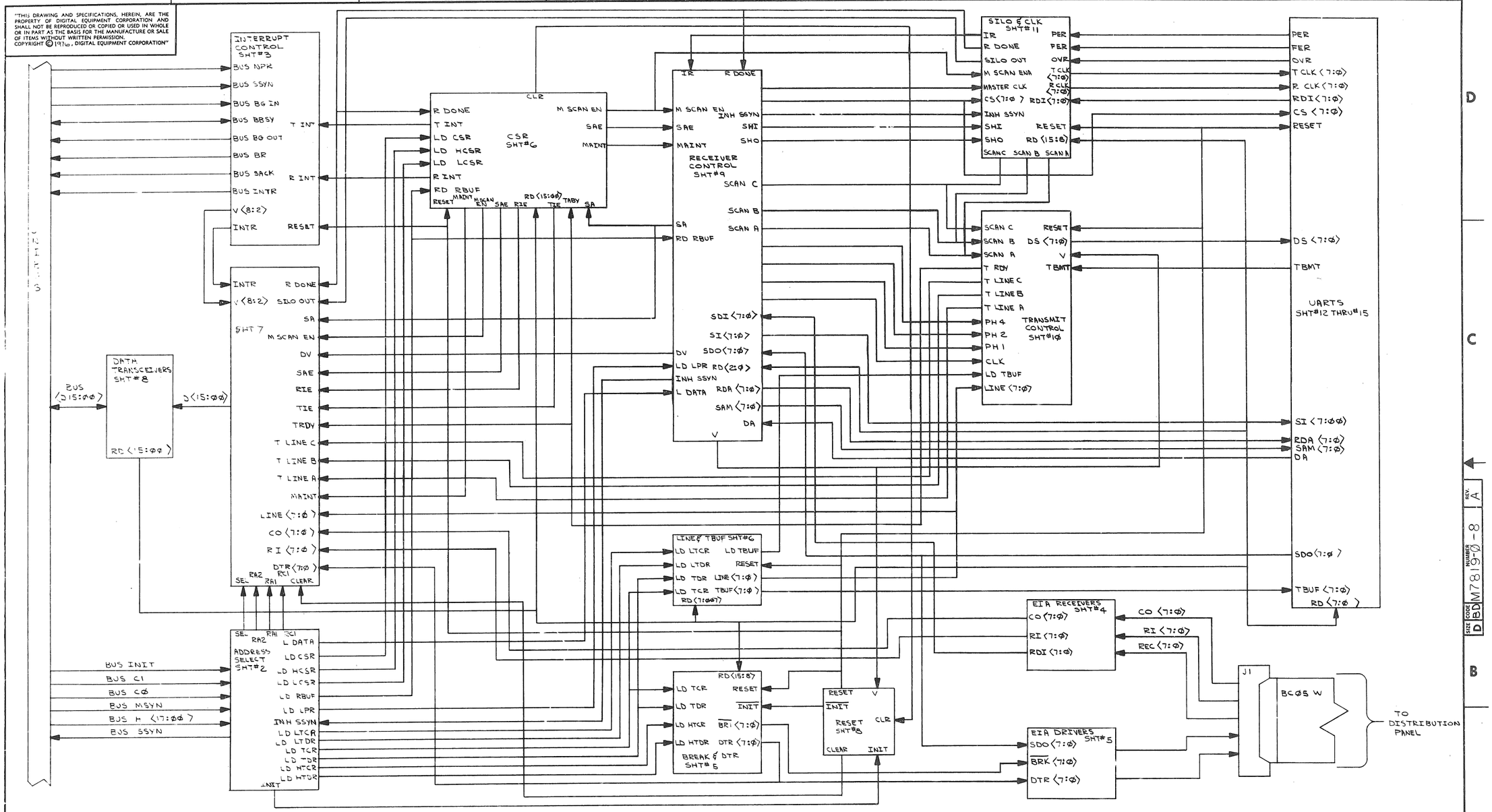

DRN. K. Cuff	2-26-76	FIRST USED ON DZ11-A
CHK'D	3-2-76	TITLE M7819 BLOCK DIAGRAM
ENG.	3-2-76	
PROJ. ENG.	3-2-76	
PROD. R. Wall	3-2-76	
NEXT HIGHER ASSY. D-UA-M7819-0-0		SIZE D CODE BD NUMBER M7819-0-8 REV. A
SCALE — / — / —		
SHEET 1 OF 1		DIST.

REVISIONS: REV. / CHANGE NO. / CHK.

DEC FORM NO. DRD 102-0

POWER & GROUND TABLE

IC TYPE	GND	+5V	+12V	-12V	V+	V-
UART (1602)	PIN 3	PIN 1	—	PIN 2	—	—
DEC 5016	PIN 11	PIN 2	PIN 9	—	—	—
DEC 3341	PIN 8	PIN 16	—	PIN 1	—	—
DEC 1488	PIN 7	—	—	—	PIN 14	PIN 1
14 PIN IC'S	PIN 7	PIN 14	—	—	—	—
16 PIN IC'S	PIN 8	PIN 16	—	—	—	—
DEC 74LS90	PIN 10	PIN 5	—	—	—	—

AA2, BA2, DA2, EA2, FA2

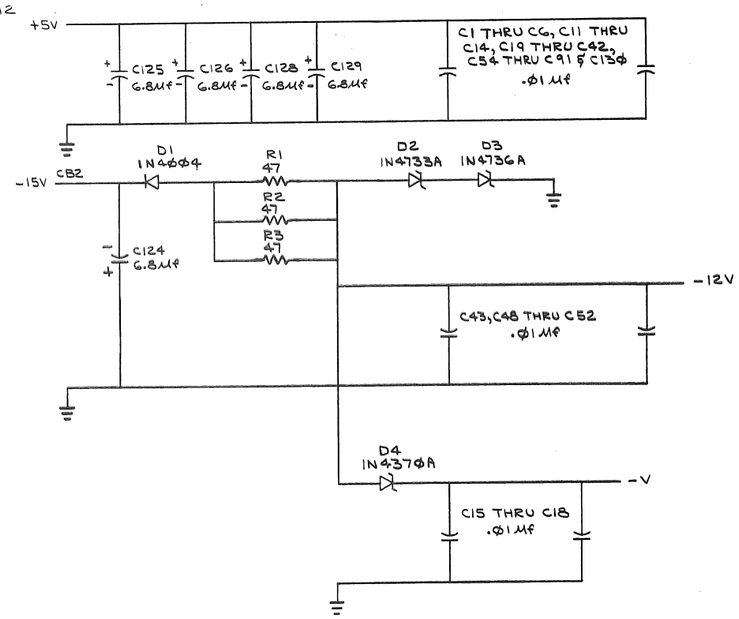

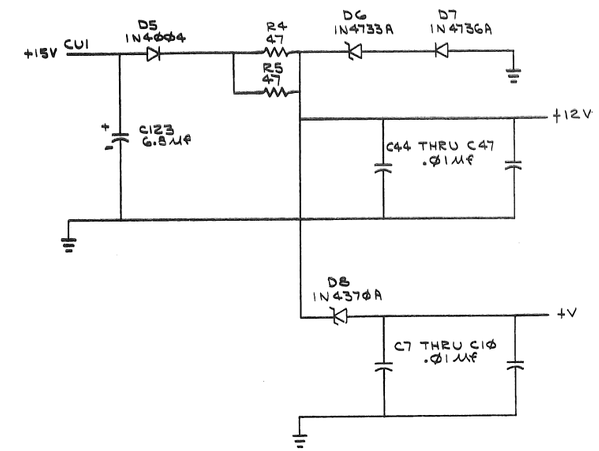

(POWER AND GROUND)

REVISIONS		
CHK.	CHANGE NO.	REV.
CL	M7819-00001	C
H. Dunmire 6-4-76		
R.A. CORMIER		
RC	M7819 00002	D
H. Dunmire 8-30-76		
R. ROBERTS		
M7819-00007		E
C. Jones	14 OCT 76	
J. ROBERTS		

DRN.		2-11-76
CHK'D		3-2-76
ENG.		3-2-76
PROJ.		3-2-76
PROD.	R. Wall	3-2-76
NEXT HIGHER ASSY.	D-UA-M7819-0-0	
SCALE	—	
SHEET	1 OF 15	

FIRST USED ON M7819

digital

TITLE 8 LINE EIA ASYNCHRONOUS MUX (SI)

SIZE	CODE	NUMBER	REV.
D	CS	M7819-0-1	E

DIST.

DEC FORM NO. DRD 102-D

NOTES:

1. THE "B" AND "D" INPUTS SHOWN ON THE 8136 LOGIC SYMBOL HAS THE FOLLOWING MEANING:
   B= UNIBUS RECEIVER INPUT.
   D= NORMAL TTL LOGIC INPUT.
2. THE 8136 CONTAINS SIX VOLTAGE COMPARATORS WITH A COMMON OUTPUT. EACH COMPARATOR MUST HAVE ITS "B" AND "D" INPUTS THE SAME, AT THE SAME TIME, FOR A TRUE (HIGH) OUTPUT.
3. WHEN A SWITCH IS CLOSED (ON), THE COMPARATOR RECOGNIZES THE RESPECTIVE UNIBUS ADDRESS BIT WHEN IT IS A LOGICAL ONE (LOW). WHEN A SWITCH IS OPEN (OFF) THE COMPARATOR RECOGNIZES THE RESPECTIVE UNIBUS ADDRESS BIT WHEN IT IS A LOGICAL ZERO (HIGH).

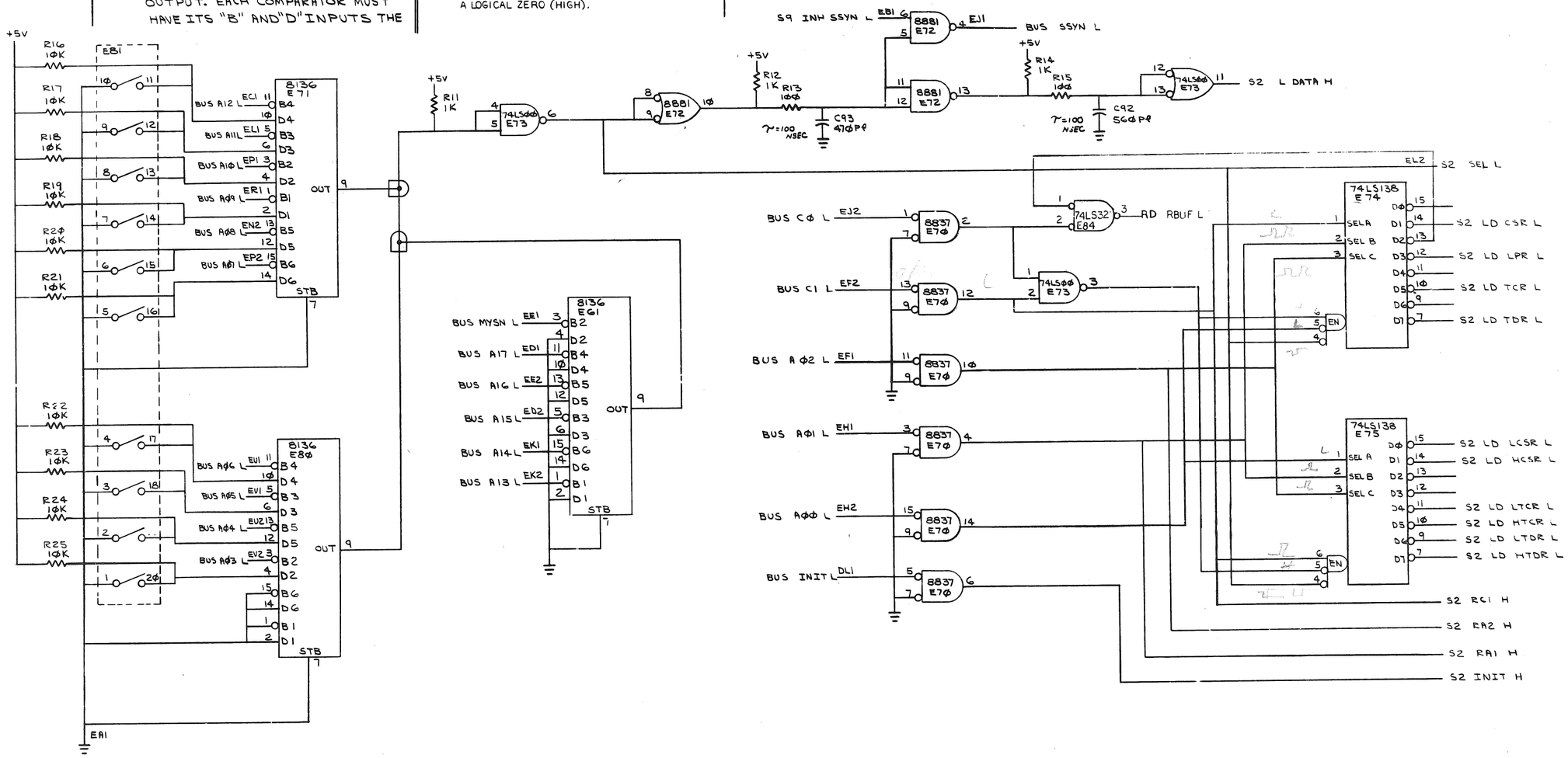

(ADDRESS SELECT)

REVISIONS		
CHK	CHANGE NO.	REV.

TITLE	SIZE	CODE	NUMBER	REV.
DUAL LINE EIA ASYNCHRONOUS MUX (S2)	D	CS	M7819-0-1	E
SCALE — / —	SHEET 2 OF 15	DIST.		

DEC FORM NO. DRD 138

*WHEN A SWITCH IS OPEN (OFF), THE RESPECTIVE VECTOR IS ∅ "ONE". WHEN A SWITCH IS CLOSED (ON), THE RESPECTIVE VECTOR BIT IS ∅ "ZERO".

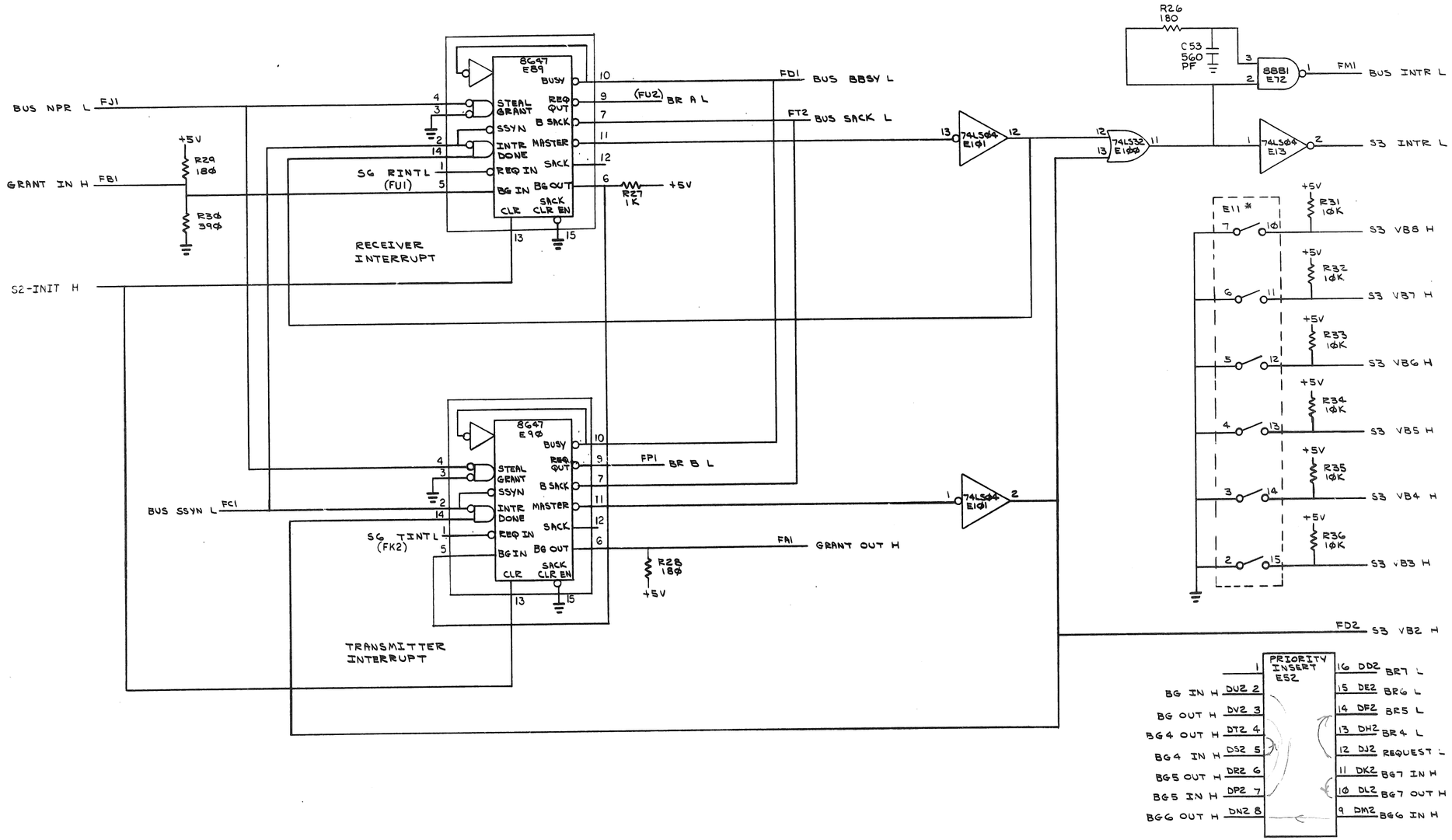

(INTERRUPT CONTROL)

REVISIONS		
CHK	CHANGE NO.	REV.

TITLE	SIZE	CODE	NUMBER	REV.
8 LINE EIA ASYNCHRONOUS MUX (S3)	D	CS	M7819-∅-1	E

SCALE — / — / — SHEET 3 OF 15 DIST.

DEC FORM NO.

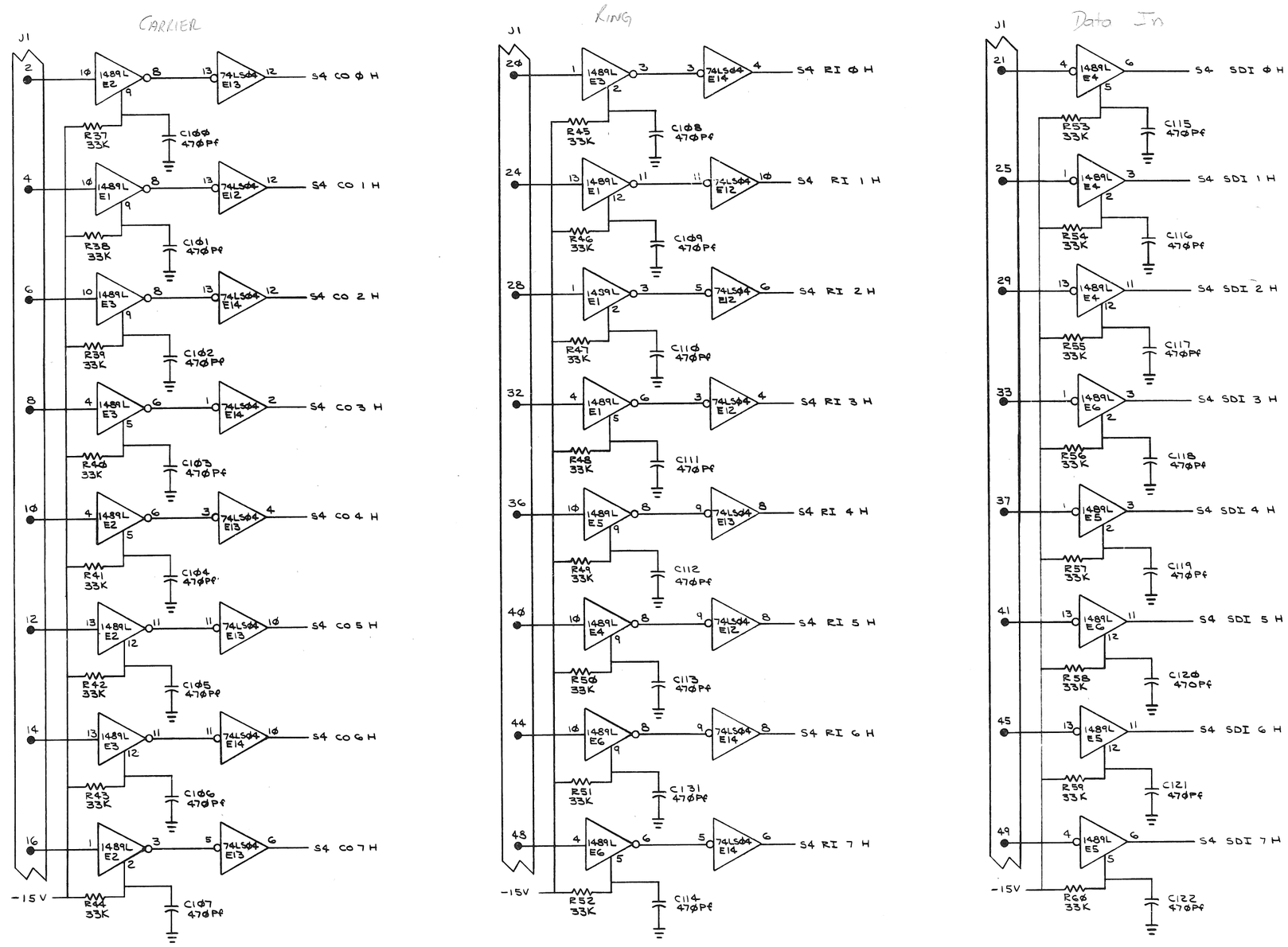

(EIA RECEIVERS)

REVISIONS		
CHK	CHANGE NO.	REV.

TITLE	SIZE	CODE	NUMBER	REV.
8 LINE EIA ASYNCHRONOUS MUX (S4)	D	CS	M7819-Ø-1	E
SCALE — / —	SHEET 4 OF 15	DIST.		

DEC FORM NO. DRD 138

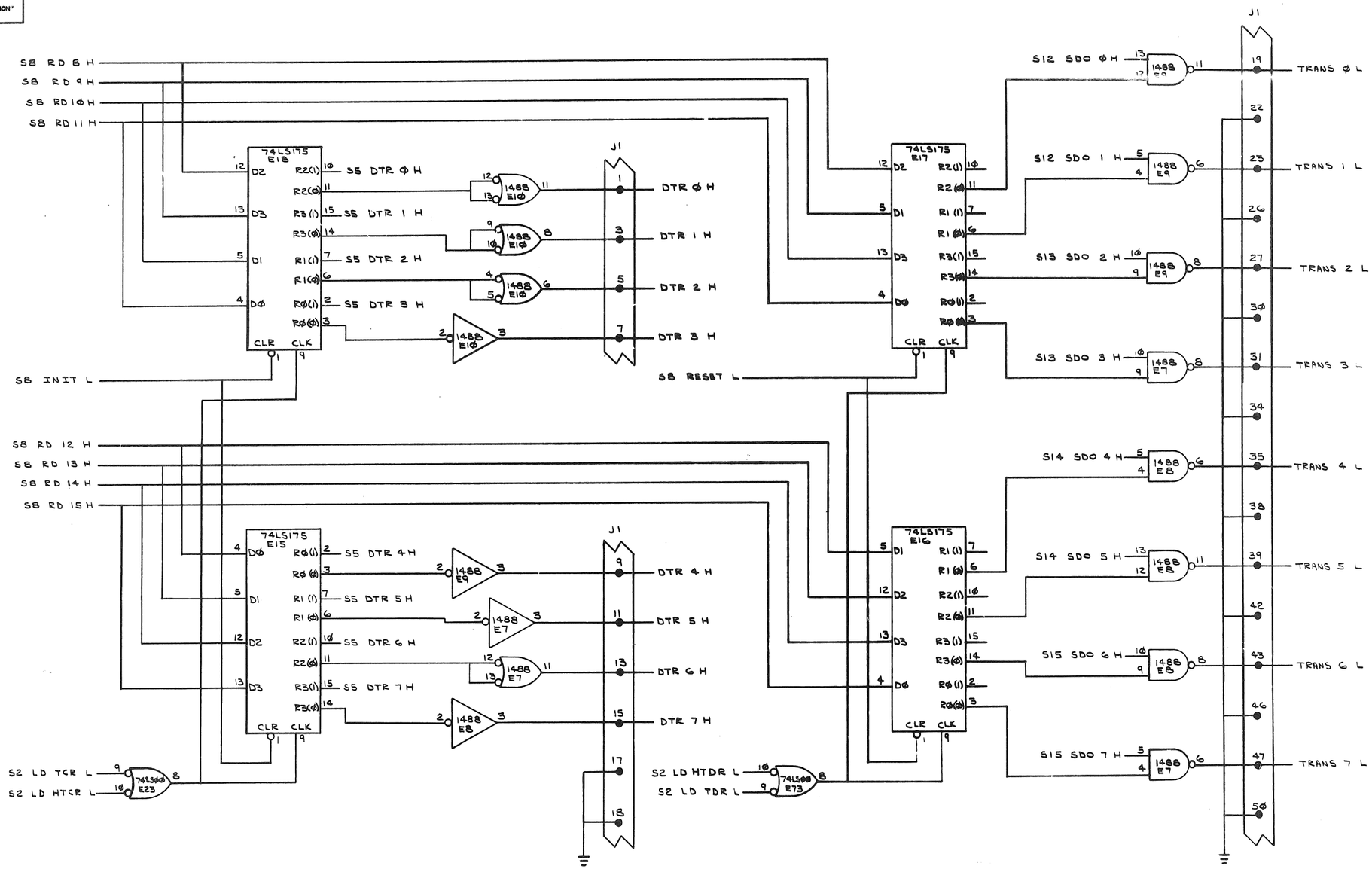

REVISIONS		
CHK	CHANGE NO.	REV.

(DTR & BRK & EIA TRANSMITTER)

TITLE 8 LINE EIA ASYNCHRONOUS MUX (S5)

SIZE	CODE	NUMBER	REV.
D	CS	M7819-0-1	E

SCALE — SHEET 5 OF 15 DIST.

DEC FORM NO. DRD 138

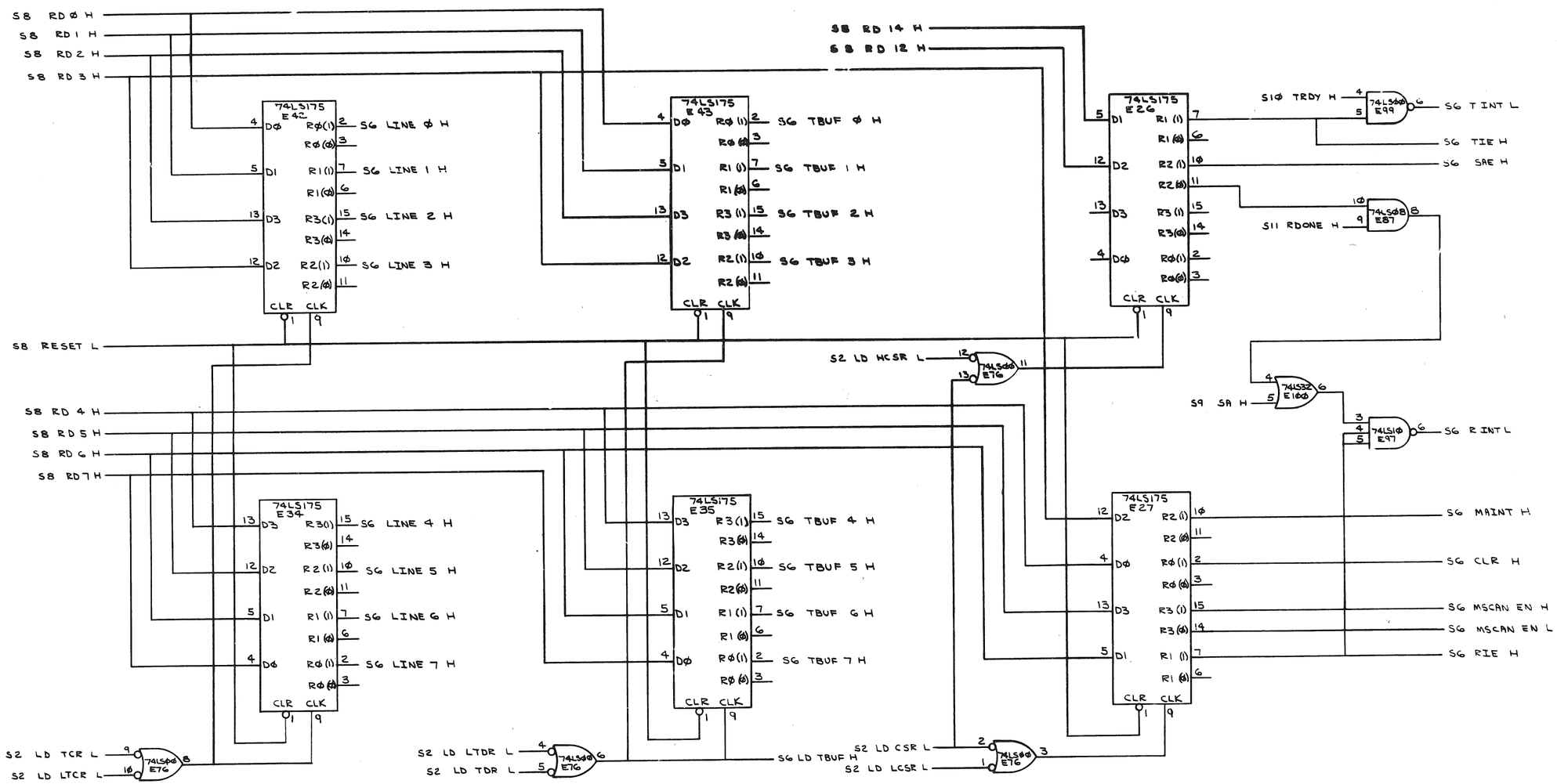

REVISIONS		
CHK	CHANGE NO.	REV.

TITLE 8 LINE EIA ASYNCHRONOUS MUX (S6) (REGISTERS)

SIZE D CODE CS NUMBER M7819-0-1 REV. E

SCALE — SHEET 6 OF 15 DIST.

DEC FORM NO. DRD 138

B.L.B. P-755

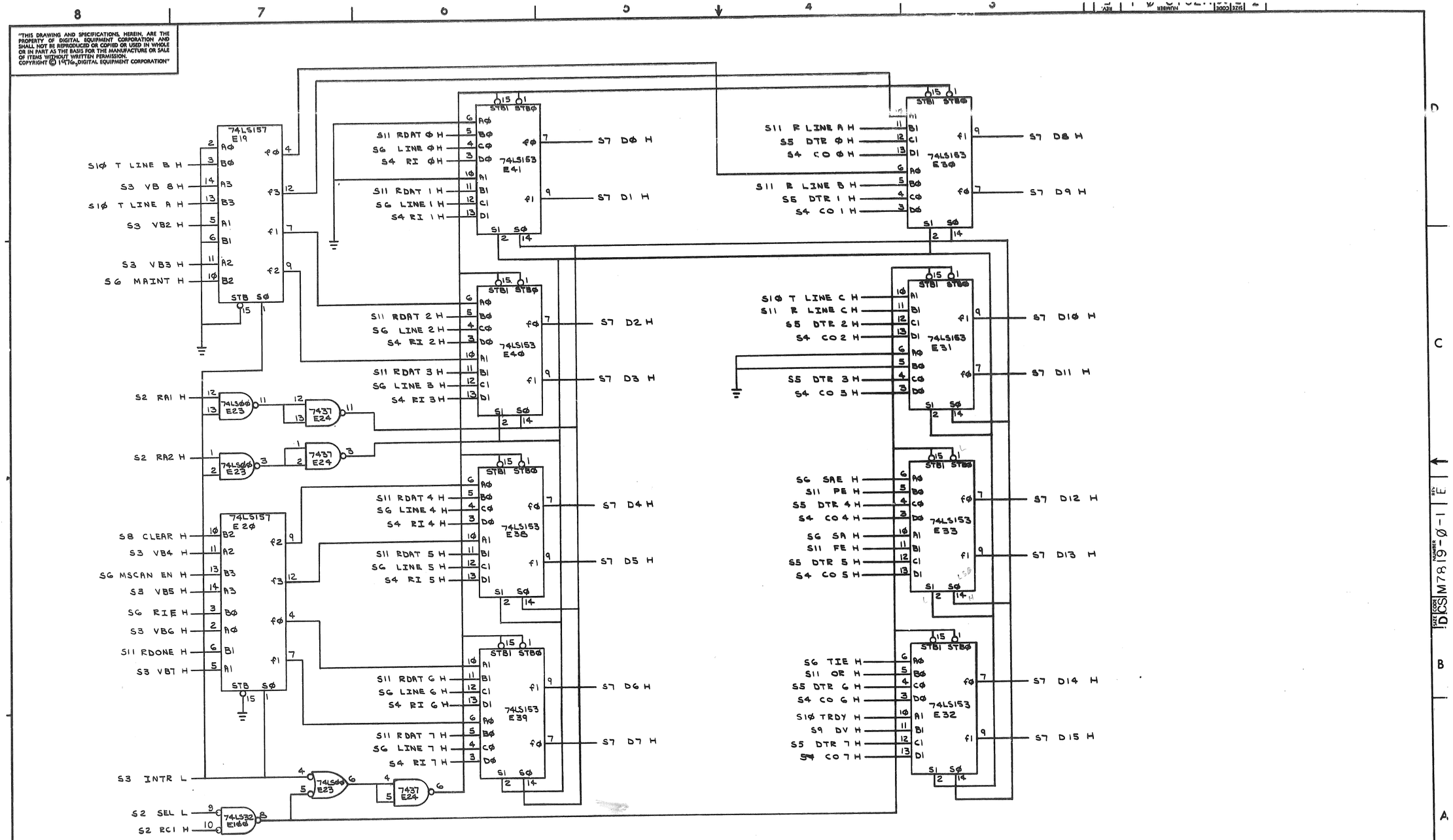

(OUTPUT DATA MULTIPLEXER)

REVISIONS		
CHK	CHANGE NO.	REV.

TITLE 8 LINE EIA ASYNCHRONOUS MUX (S7)

SIZE D CODE CS NUMBER M7819-Ø-1 REV. E

SCALE — SHEET 7 OF 15 DIST.

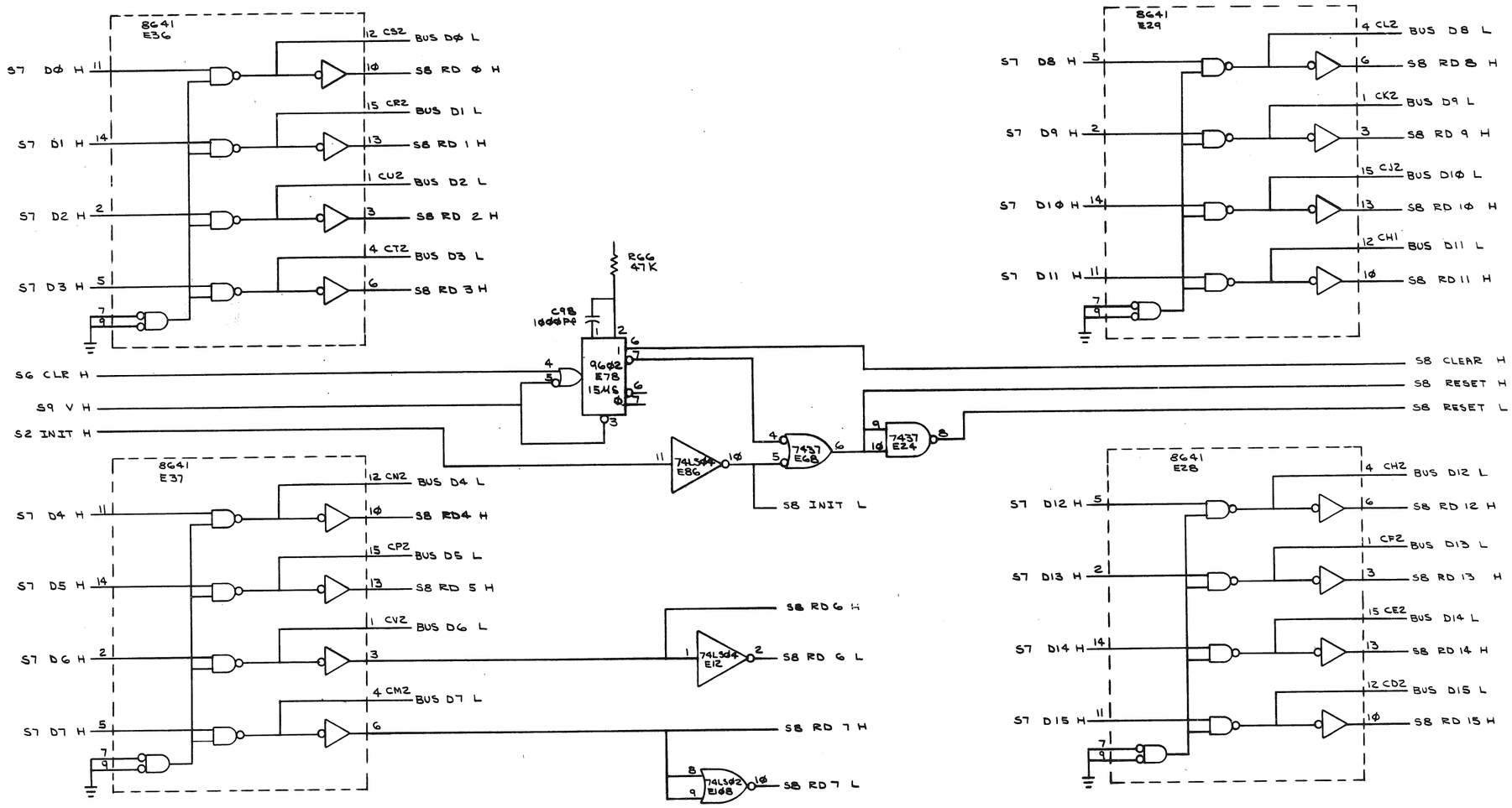

(UNIBUS TRANSCEIVERS AND RESET)

REVISIONS		
CHK	CHANGE NO.	REV.

TITLE 8 LINE EIA ASYNCHRONOUS MUX (S8)

SIZE D CODE CS NUMBER M7819-0-1 REV. E

SCALE — SHEET 8 OF 15 DIST.

DEC FORM NO. DRD 138

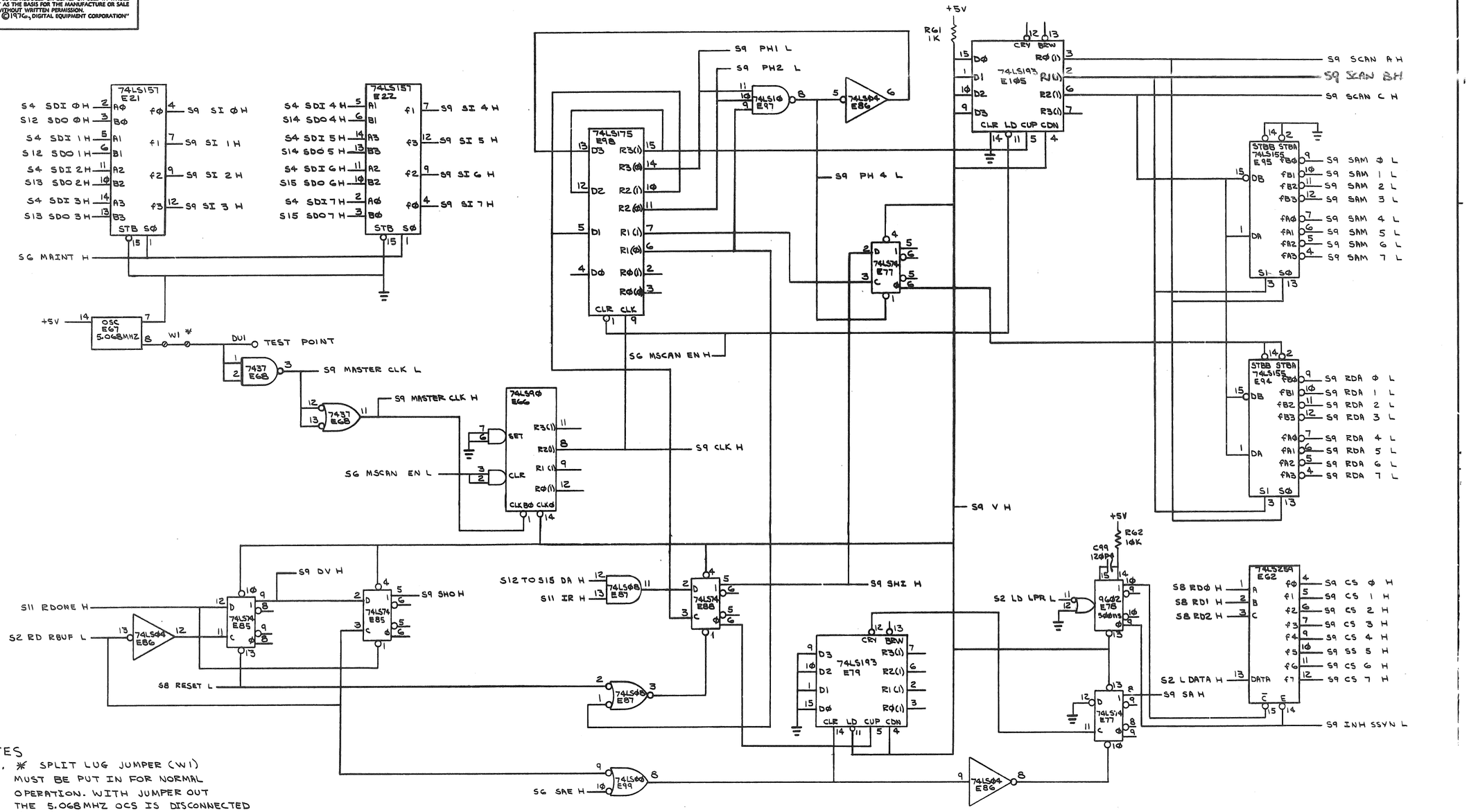

NOTES

1. * SPLIT LUG JUMPER (W1) MUST BE PUT IN FOR NORMAL OPERATION. WITH JUMPER OUT THE 5.068 MHZ OCS IS DISCONNECTED AND AN EXT TEST POINT SIGNAL CAN DRIVE THE SCANNER. THIS POINT IS FOR IN-HOUSE USE ONLY.

REVISIONS		
CHK	CHANGE NO.	REV.

(RECEIVER CONTROL)

TITLE	SIZE	CODE	NUMBER	REV.
8 LINE EIA ASYNCHRONOUS MUX (S9)	D	CS	M7819-Ø-1	E
SCALE — / —	SHEET 9 OF 15	DIST.		

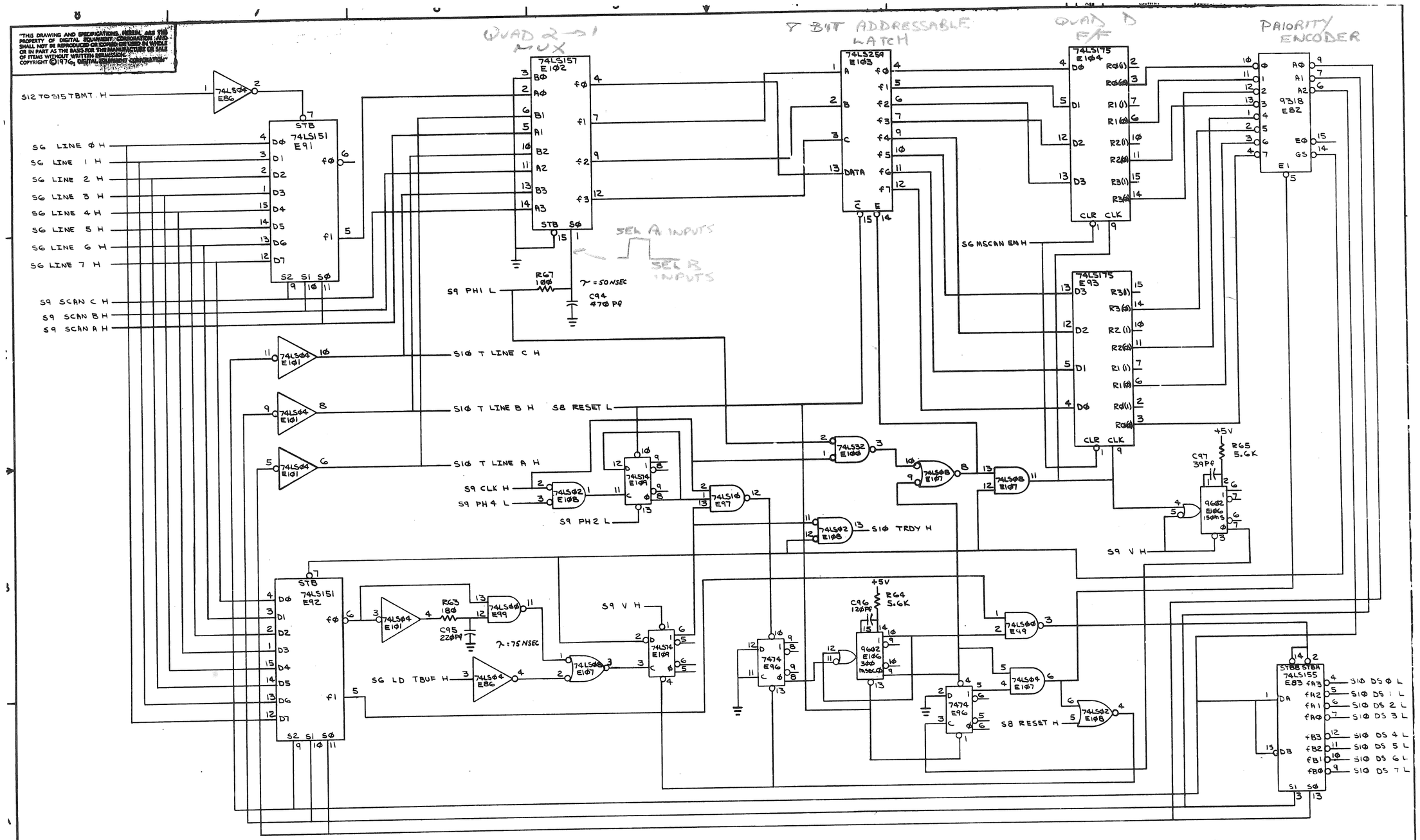

REVISIONS		
CHK	CHANGE NO.	REV.

(TRANSMITTER CONTROL)

TITLE 8 LINE EIA ASYNCHRONOUS MUX (S10)

SIZE D | CODE CS | NUMBER M7819-Ø-1 | REV. E

SCALE — | SHEET 10 OF 15 | DIST.

DEC FORM NO. DRD 138

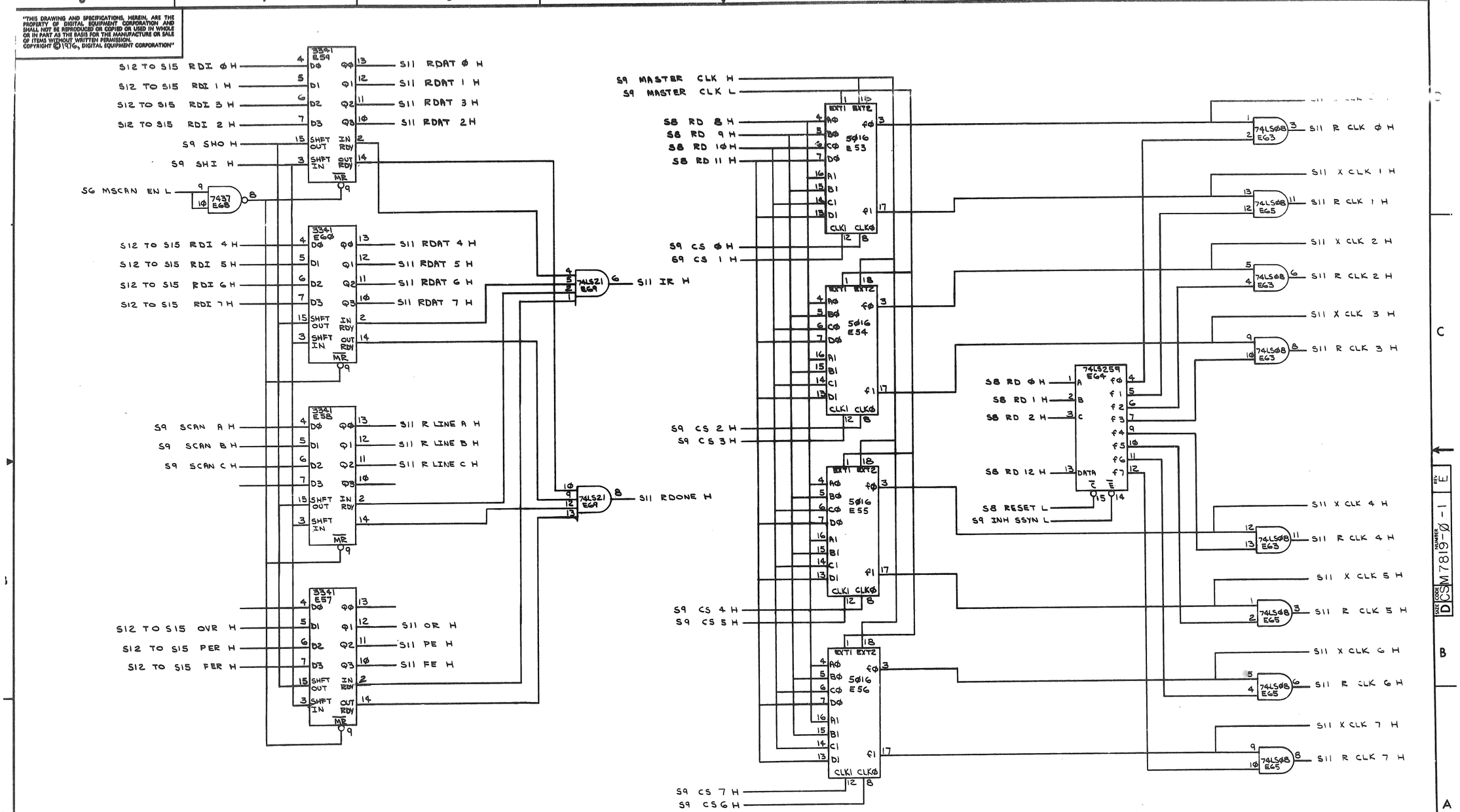

(SILO AND UART CLOCKS)

REVISIONS		
CHK	CHANGE NO.	REV.

TITLE 8 LINE EIA ASYNCHRONOUS MUX (S11)

SIZE D | CODE CS | NUMBER M7819-Ø-1 | REV. E

SCALE — | SHEET 11 OF 15 | DIST.

DEC FORM NO. DRD 138

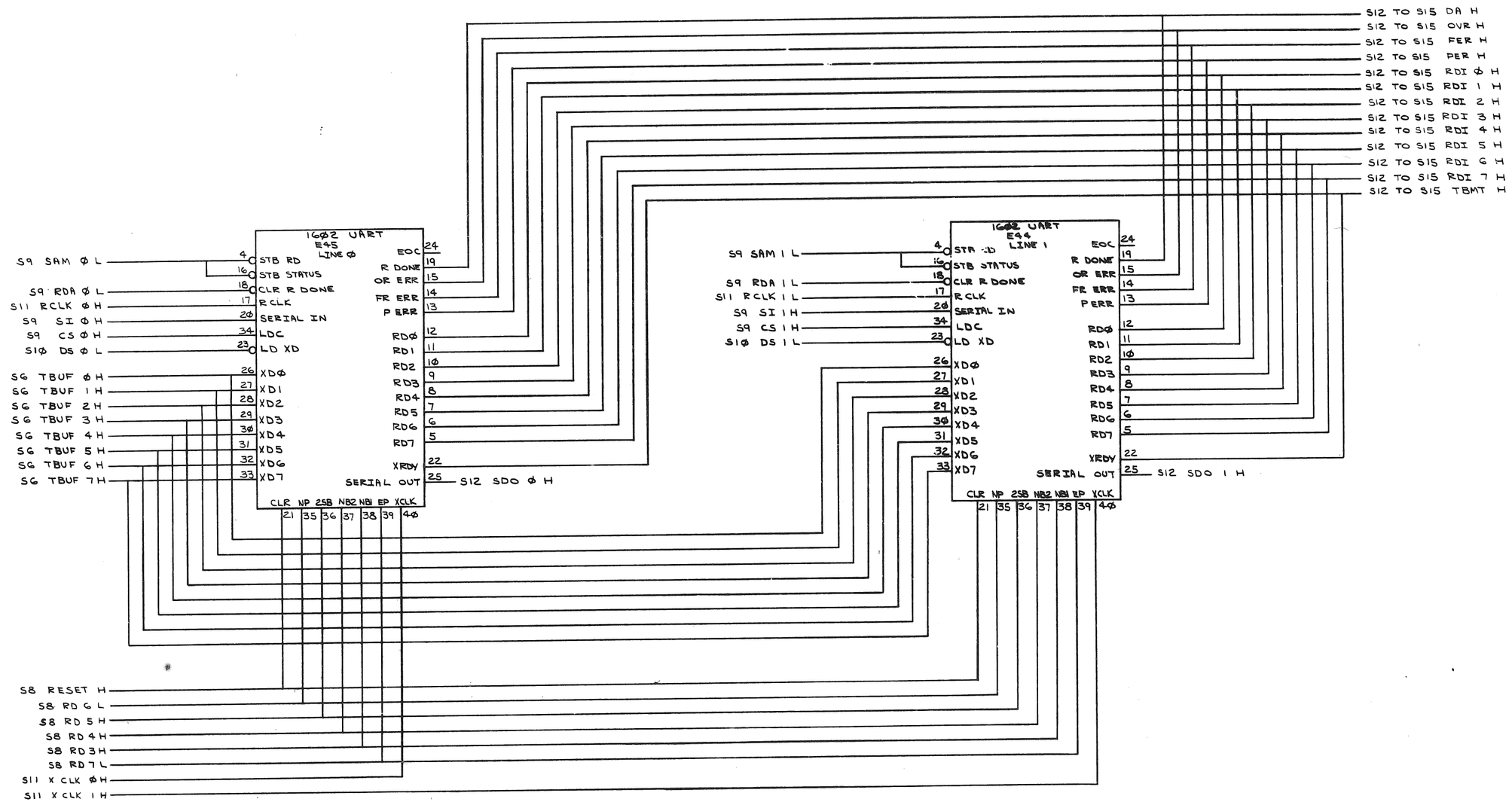

(TRANSCEIVER LINES Ø & 1)

REVISIONS		
CHK	CHANGE NO.	REV.

TITLE	SIZE	CODE	NUMBER	REV.
8 LINE EIA ASYNCHRONOUS MUX (S12)	D	CS	M7819-Ø-1	E

SCALE — SHEET 12 OF 15 DIST.

DEC FORM NO.

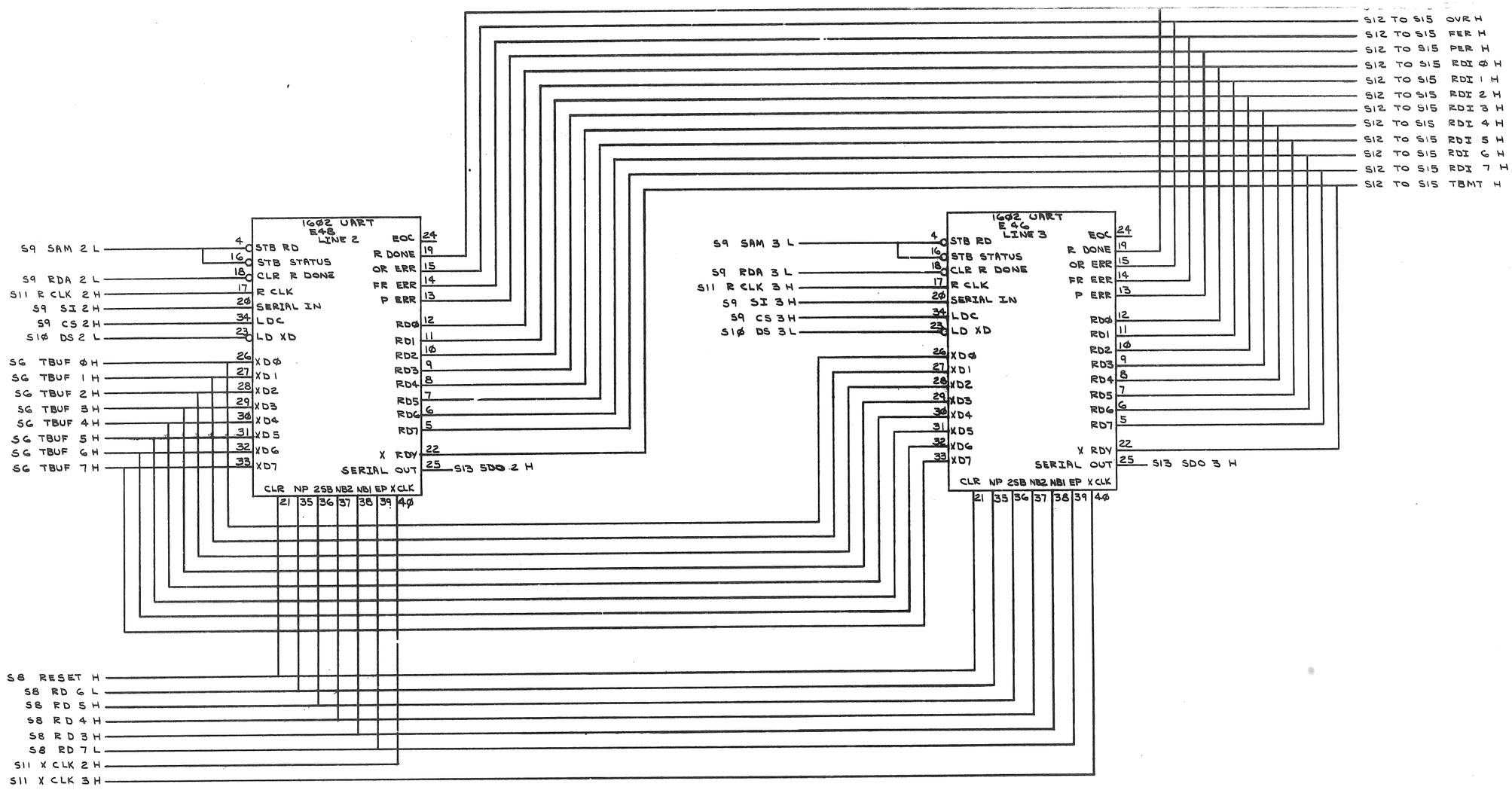

(TRANSCEIVER LINES 2&3)

REVISIONS		
CHK	CHANGE NO.	REV.

TITLE	SIZE	CODE	NUMBER	REV.
8 LINE EIA ASYNCHRONOUS MUX (S13)	D	CS	M7819-0-1	E

SCALE — SHEET 13 OF 15 DIST.

DEC FORM NO.

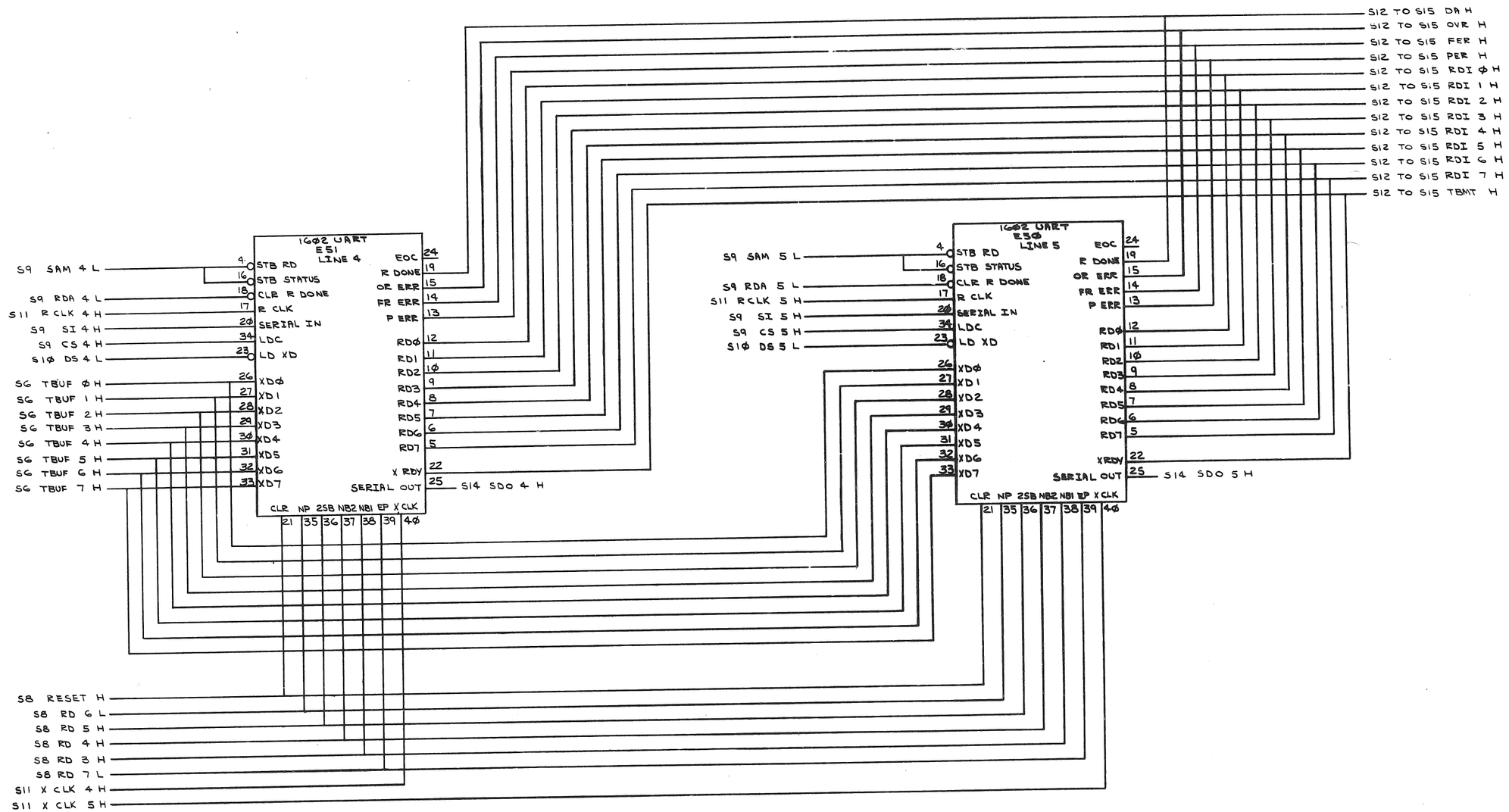

TRANSCEIVER LINES 4 & 5

REVISIONS		
CHK	CHANGE NO.	REV.

TITLE: 8 LINE EIA ASYNCHRONOUS MUX (S14)

SIZE: D | CODE: CS | NUMBER: M7819-Ø-1 | REV.: E

SCALE: — | SHEET 14 OF 15 | DIST.

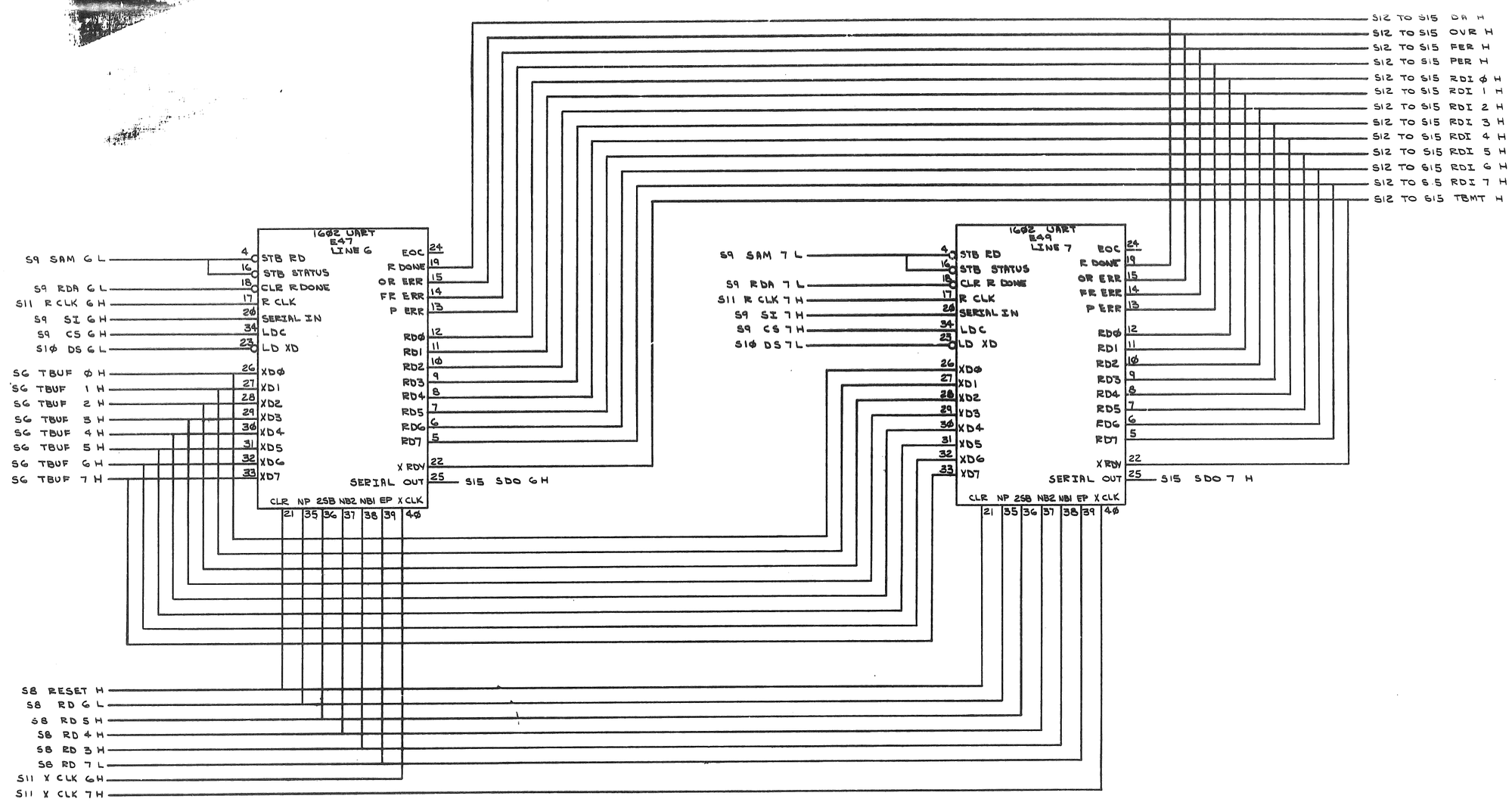

REVISIONS		
CHK	CHANGE NO.	REV.

TRANSCEIVER LINES 6 & 7

TITLE	SIZE	CODE	NUMBER	REV.
8 LINE EIA ASYNCHRONOUS MUX (S15)	D	CS	M7819-Ø-1	E

SCALE — SHEET 15 OF 15 DIST.

DEC FORM NO. DRD 139

digital EQUIPMENT CORPORATION
MAYNARD, MASSACHUSETTS

DRAWING DIRECTORY

CUSTOMER PRINT SET INDEX

THIS IS PRINT SET

SEQUENCE	
DRAWING DIRECTORY	B-DD-H317-0
H317 CABLE BOX ASSY	D-UA-H317-0-0
DJ-11 DIST. PANEL (EIA) CIRCUIT SCHEMATIC	D-CS-5410260-0-1
DJ-11 DIST. PANEL (TTY) CIRCUIT SCHEMATIC	D-CS-5410262-0-1
DV11 DIST. PANEL CIRCUIT SCHEMATIC	D-CS-5411153-0-1
DZ11 DIST PANEL (EIA)	D-CS-5411928-0-1
DZ11 DIST PANEL (TTY)	D-CS-5411974-0-1

SEQUENCE	
MFG PRINT SET	
PACKAGING INSTRUCTION	A-PI-3700091-0-0

UNIT VARIATIONS

VARIATION	TITLE	PRINT SET TYPE 1
H317-A	H317 CABLE BOX ASSY.	X
H317-B	H317 CABLE BOX ASSY.	X
H317-C	H317 CABLE BOX ASSY	X
H317-E	H317 CABLE BOX ASSY (EIA)	X
H317-F	H317 CABLE BOX ASSY (TTY)	X

REVISIONS		
DATE	CHG. NO.	REV
3-74	H317-3	A
2-75	H317-4	B
11-75	H317-5	C

USED ON OPTION/MODEL
H317

DRN. P. MARCOTTE	DATE 11/1/2	TITLE H317 CABLE BOX ASSY.	
CHK'D. C. Teschner	DATE 1/24/73		
PROJ ENG.	DATE		
PROD.	DATE	SIZE B	CODE DD
FIELD SERV.	DATE 1-25-73	NUMBER H317-Ø	REV C
SHEET 1 OF 3		DIST	

DRB 106

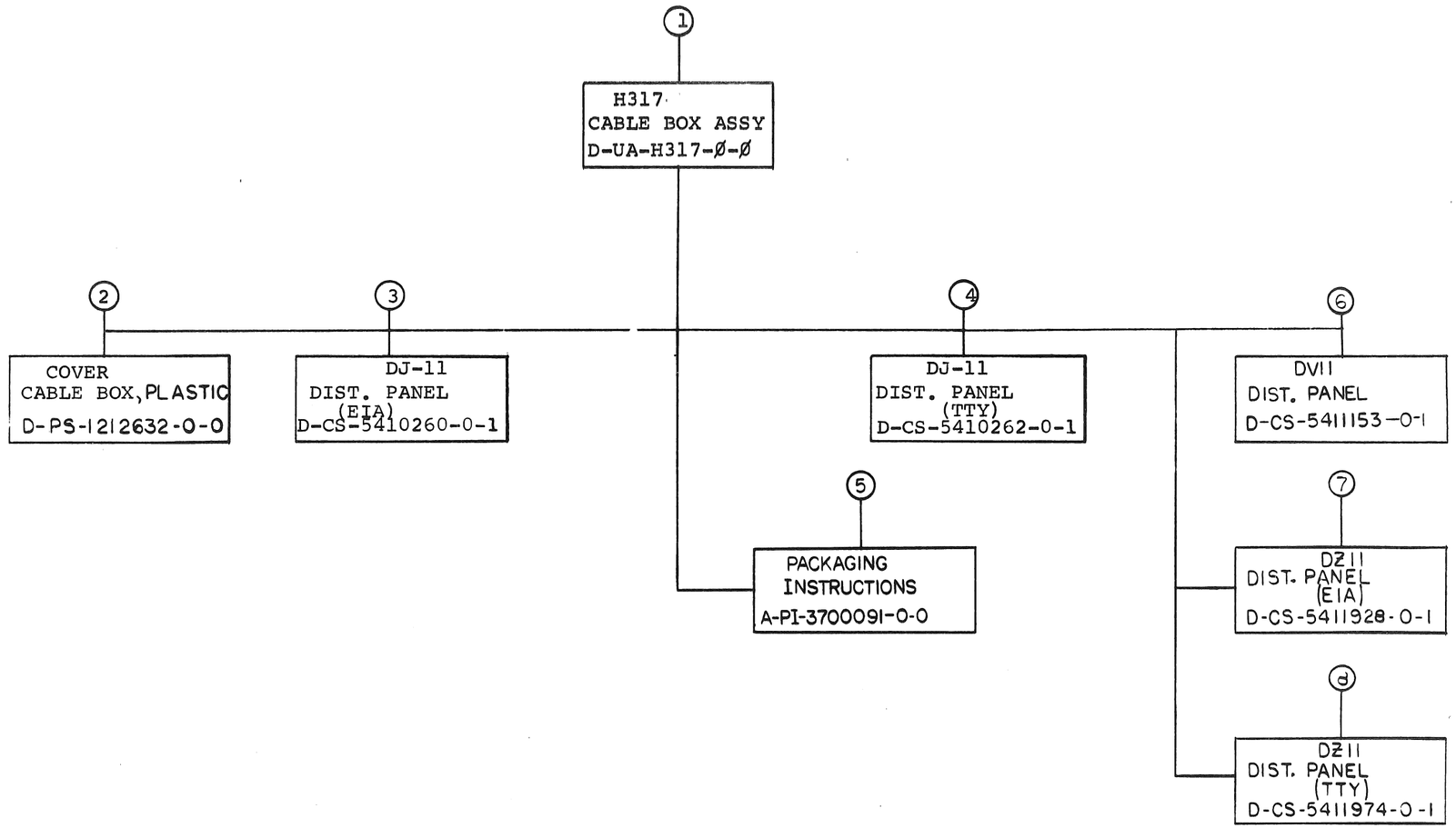

TITLE	SHEET	SIZE	CODE	NUMBER	REV
H317 CABLE BOX ASSY.	2 OF 3	B	DD	H317-Ø	C

DRR 107

ELECTRICAL

CUSTOMER PRINT SET -1	DEPOT SET	FIND NO.	DRAWING NO.	REV	NO OF SHT	DESCRIPTION	OPTION NO.
X		1	D-UA-H317-Ø-Ø	C	1	H317 CABLE BOX ASSY	
		2	E-IA-7410667-0-0		1	COVER, CABLE BOX	
X		3	D-CS-5410260-0-1	#	3	DJ-11 DIST. PANEL (EIA)	
			B-MH-5410260-0-6		1	MODULE ECO HISTORY	
X		4	D-CS-5410262-0-1	#	6	DJ-11 DIST. PANEL (TTY)	
			B-MH-5410262-0-6		1	MODULE ECO HISTORY	
X		6	D-CS-5411153-0-1	#	3	DV11 DIST PANEL	
			B-MH-5411153-0-6	#	1	MODULE ECO HISTORY	
X		7	D-CS-5411928-0-1	#	3	DØ11 DIST. PANEL (EIA)	
			B-MH-5411928-0-6	#	1	MODULE ECO HISTORY	
X		8	D-CS-5411974-0-1	#	3	DØ11 DIST. PANEL (TTY)	
			B-MH-5411974-0-6	#	1	MODULE ECO HISTORY	

MECHANICAL

CUSTOMER PRINT SET -1	DEPOT SET	FIND NO.	DRAWING NO.	REV	NO OF SHT	DESCRIPTION	OPTION NO.
		1	D-UA-H317-Ø-Ø	C	1	H317 CABLE BOX ASSY	
			E-IA-7410666-0-0		1	H317 MOUNTING PL	
			C-MD-7410668-0-0		1	CLAMP, CABLE	
			A-DC-7410681-0-0		1	DECAL (TERMINAL BLOCK)	
		2	D-PS-1212632-0-0		1	COVER, CABLE BOX PLASTIC	
			C-IA-7414372-0-0		1	LOGO H317A	
			C-IA-7414372-1-0		1	LOGO, H317B	
			C-IA-7414372-2-0		1	LOGO H317C	
			C-IA-7414372-5-0		1	LOGO H317E	
			C-IA-7414372-6-0		1	LOGO H317F	
		3	D-CS-5410260-0-1	#	3	DJ-11 DIST. PANEL (EIA)	
			K-CO-5410260-0-4		1	X-Y COORDINATE HOLE LOCATION	
			D-AH-5410260-0-5		1	ASSY/DRILLING HOLE LAYOUT	
			B-MH-5410260-0-6		1	MODULE ECO HISTORY	
		4	D-CS-5410262-0-1	#	6	DJ-11 DIST. PANEL (TTY)	
			K-CO-5410262-0-4		1	X-Y COORDINATE HOLE LOCATION	
			D-AH-5410262-0-5		1	ASSY/DRILLING HOLE LAYOUT	
			B-MH-5410262-0-6		1	MODULE ECO HISTORY	
	X	5	A-PI-3700091-0-0		2	PACKAGING INSTRUCTIONS	
			A-PS-9905315-0-0		2	OUTER CARTON	
			A-PS-9905317-0-0		2	LAMINATED TRAY	
			A-PS-9905316-0-0		2	CORRUGATED PAD	
		6	D-CS-5411153-0-1	#	3		
			K-CO-5411153-0-4		1		
			D-AH-5411153-0-5		1		
			B-MH-5411153-0-6		1		
		7	D-CS-5411928-0-1	#	3	DØ11 DIST. PANEL (EIA)	
			K-CO-5411928-0-4		1	X Y COORDINATE HOLE LOC.	
			D-AH-5411928-0-5		1	ASSY/DRILLING HOLE LAYOUT	
			B-MH-5411928-0-6		1	MODULE ECO HISTORY	
		8	D-CS-5411974-0-1	#	3	DØ11 DIST. PANEL (TTY)	
			K-CO-5411974-0-4		1	X-Y COORDINATE HOLE LOC.	
			D-AH-5411974-0-5		1	ASSY/DRILLING HOLE LAYOUT	
			B-MH-5411974-0-6		1	MODULE ECO HISTORY	

TITLE	SHEET	SIZE	CODE	NUMBER	REV
H317 CABLE BOX ASSY.	3 OF 3	B	DD	131/ØØ	C

DRB 108

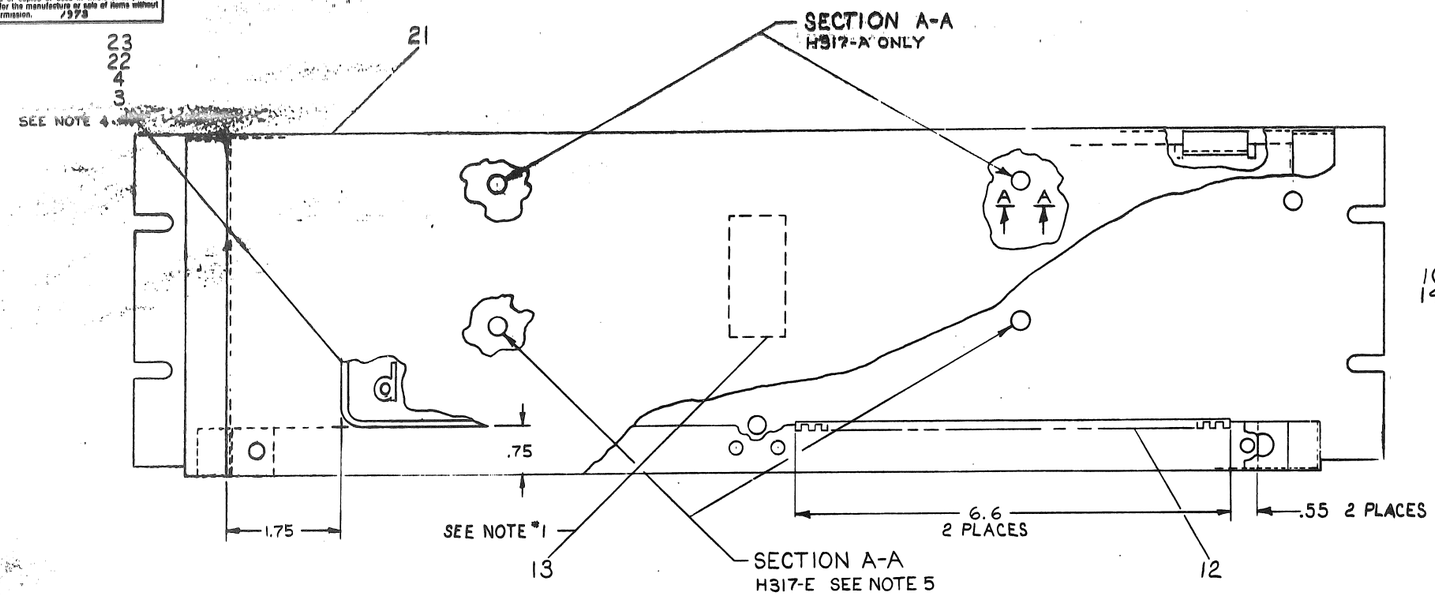

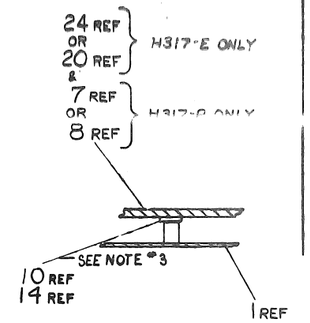

NOTES

1. IF ITEM #7 IS USED THE DECAL (ITEM #13) IS TO BE APPLIED TO THE INSIDE SURFACE OF THE COVER (ITEM #3).
2. IF THE H317B OR C UNIT IS BEING BUILT THEN THE CABLE CLAMPS (ITEM #2) ARE TO BE MOUNTED UP SIDE DOWN.
3. PRIOR TO MOUNTING DISTRIBUTER PANEL STANDOFFS ON MOUNTING PLATE USING ECO BOND ADHESIVE (ITEM 14) AND ALLOW TO DRY.
4. USE ASSEMBLY TOOL NO. 9606416 TO POSITION ITEMS 3,4, OR 22 (LOGO) ON COVER, ITEM 21.
5. ON H317-A, USE UPPER HOLES, ON H317-E USE MIDDLE HOLES.

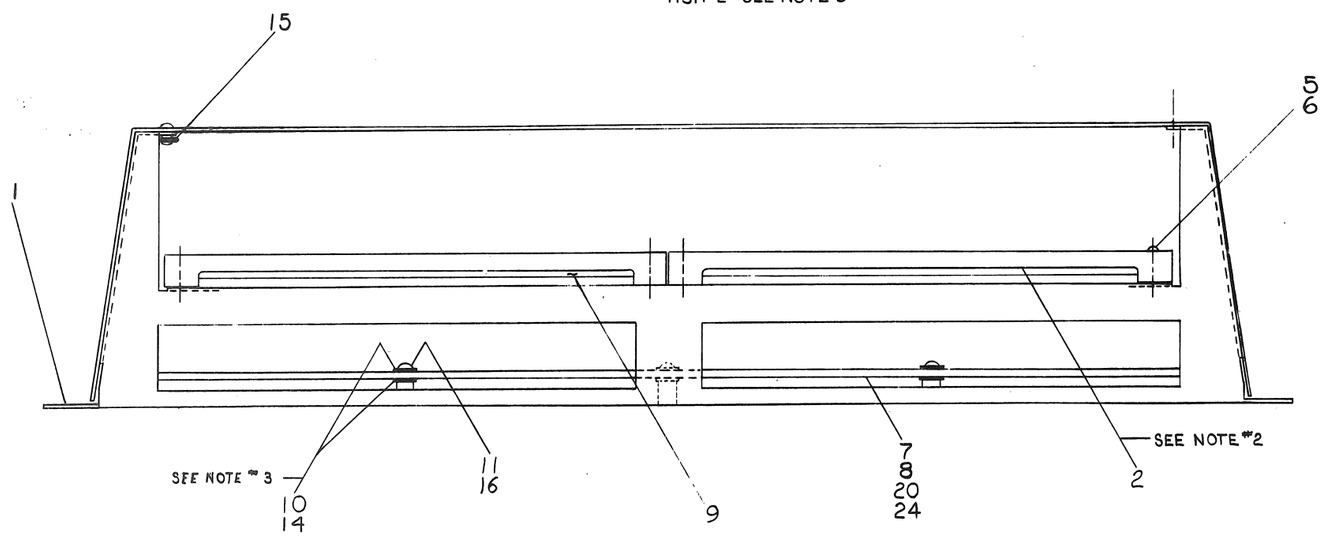

H317-F	H317-E	H317-G	H317-B	H317-A			
1					DZ11 DIST. PANEL (TTY)	5411974-00	24
1					LOGO, H317-F	7414372-6	23
	1				LOGO, H317-E	7414372-5	22
1	1	1	1	1	COVER, CABLE BOX, PLASTIC	1212632-00	21
	1				DZ11 DIST. PANEL (EIA)	5411928-00	20
		1			DV11 DIST. PANEL	D-CS-5411153-0-1	19
		1			LOGO, H317-C	7414372-2	18
1	1	1	1	1	PACKAGING INSTRUCTIONS	A-PI-3700091-0-0	17
18	10	10	10	8	LOCKWASHER INT #8	9006634	16
2	2	2	2	2	RECEPTACLE CLIP ON	9008196	15
A/R	A/R	A/R	A/R	A/R	ECOBOND ADHESIVE	9009156	14
				1	DECAL	A-DC-7410681-0-0	13
A/R	A/R	A/R	A/R	A/R	GROMMET	9007036	12
8	10	10	10	8	SCR. PHL. HD. 8-32 x .25	9006035-1	11
20	20	20	20	16	WASHER, NYLON #8	9006708	10
2	2	2	2	2	1/8 x .50 x 6.63 FOAM TAPE	9009097-1	9
			1		DJ-11 DIST PANEL (EIA)	D-CS-5410260-0-1	8
				1	DJ-11 DIST PANEL (TTY)	D-CS-5410262-0-1	7
4	4	4	4	4	LOCKWASHER, INT. #6	9006633	6
4	4	4	4	4	SCR. PHL. PAN. HD. #6-32 X .75 LG.	9006026-1	5
			1		LOGO, H317-B	7414372-1	4
				1	LOGO, H317-A	7414372-3	3
2	2	2	2	2	CLAMP, CABLE	C-MD-7410665-0-0	2
1	1	1	1	1	H317 MOUNTING PLATE	E-IA-7410666-0-0	1
FIRST USED ON OPTION/MODEL					QTY.	DESCRIPTION	PART NO.	ITEM NO.
H317					PARTS LIST			

UNLESS OTHERWISE SPECIFIED DIMENSION IN INCHES. TOLERANCES

DECIMALS	ANGLES
.XXX = .005 .XX = .02 .X = .1	±0° 30'

REMOVE BURRS AND BREAK SHARP CORNERS SURFACE QUALITY ✓

MATERIAL —/—/—

FINISH —/—/—

DRN. MARCOTTE	DATE 10-26-72	digital EQUIPMENT CORPORATION MAYNARD MASSACHUSETTS
CHK'D. TESCHNOR	DATE 1-11-73	
ENG. GRAHAM	DATE 1-12-73	TITLE H317 CABLE BOX ASSY
PROJ. ENG. BASTIANI	DATE 1-12-73	
PROD. MAZZONE	DATE 1-17-73	
NEXT HIGHER ASSY. B-DD-H317-Ø		SIZE D CODE UA NUMBER H317-Ø-Ø REV. C
SCALE 1/1 SHEET 1 OF 1		DIST

REVISIONS				
CHK	CHANGE NO.		REV.	
	H317-00001		A	REVISED & REDRAWN 4-10-73 G. GRAHAM
	H317-00002		B	7-13-73 GRAHAM
	H317-00003		C	7-24-73 BASTIANI 4-7-74
	H317-00004		D	2-21-75 BASTIANI
	H317-00005		E	3-3-75 V. BASTIANI 12-1-75

BRUNING 40-107 15968

DEC FORM NO

SIZE	CODE	NUMBER	REV.
B	DD	5411928-0	C

DRAWING NO.	NO. OF SHTS	PART NO.	DESCRIPTION	REVISIONS	
D-CS-5411928-0-1	2		CIRCUIT SCHEMATIC	B	C
B-MH-5411928-0-6	1		MODULE ECO HISTORY	*	A
E-UA-5411928-0-0	3		DZ11 EIA DISTRIBUTION PANEL	B	B
		5011927	ETCHED BOARD	C	C
5411928-0-L	1		P.C. DESIGN DATA BASE	REF	-
5411928-0-PL	1		INSERTION P/L DATA BASE	REF	-
B-PL-5411928-0-0	1		PARTS LIST	B	B
E-MD-5011927-0-0	4		DRILL & ETCH DRAWING	B	B

NOTES:

REVISIONS		
DATE	CHG NO.	REV.
[illegible]	00001	C

digital

USED ON OPTION/MODEL	

DRN.	SHETRAWSKI	3-22-76
CHK'D	SHETRAWSKI	3-22-76
ENG.	[illegible]	[illegible]
PROD.	R. Wall	[illegible] 76

TITLE
DZ11 EIA DISTRIBUTION PANEL

SIZE	CODE	NUMBER	REV.
B	DD	5411928-0	C

SHEET 1 OF 1

DIGITAL EQUIPMENT CORPORATION

PARTS LIST

MADE BY R. A. CORMIER DATE 2-12-76	CHECKED R. A. Cormier DATE 3-24-76	SECTION 1
ENG Robert A. Zimm. DATE 3-20-76	PROD R. Wall DATE 3-26-76	ISSUED SECTION 1

ITEM NO.	DRAWING NO.	PART NO.	DESCRIPTION	QUANTITY/VARIATION	REF DESIGNATION
1	E-MD-5011927-0-0	5011927	ETCHED CIRCUIT BOARD	1	
2		1209941-03	LATCH, LEFT FOR RT. ANG. HEADER	2	
3		1209941-04	LATCH, RIGHT FOR RT. ANG. HEADER	2	
4		1209941-07	CONN. 5ØP. RT. ANG.HEADER	2	J18, J20
5		1205886-01	CONN. D-SUB MIN W/PC TERM	16	J1-J16
6		9009113-10	STANDOFF P.C. BOARD 4-4Ø X .187	32	
7		9008451	SCREWLOCK D2Ø418-2 4-4Ø X .312	32	
8		9009185	JUMPER, WIRE INSULATED	80	W1-W8Ø

NOTES:

E.C.O. NO.

TITLE DZ11 EIA DISTRIBUTION PANEL

ASSY NO. E-UA-5411928-0-0

SHEET 1 OF 1

SIZE	CODE	NUMBER	REV
B	PL	5411928-0-0	H

INSERTION PARTS LIST DATA BASE REV

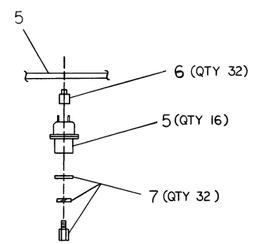

VIEW A-A
(16 PLACES)

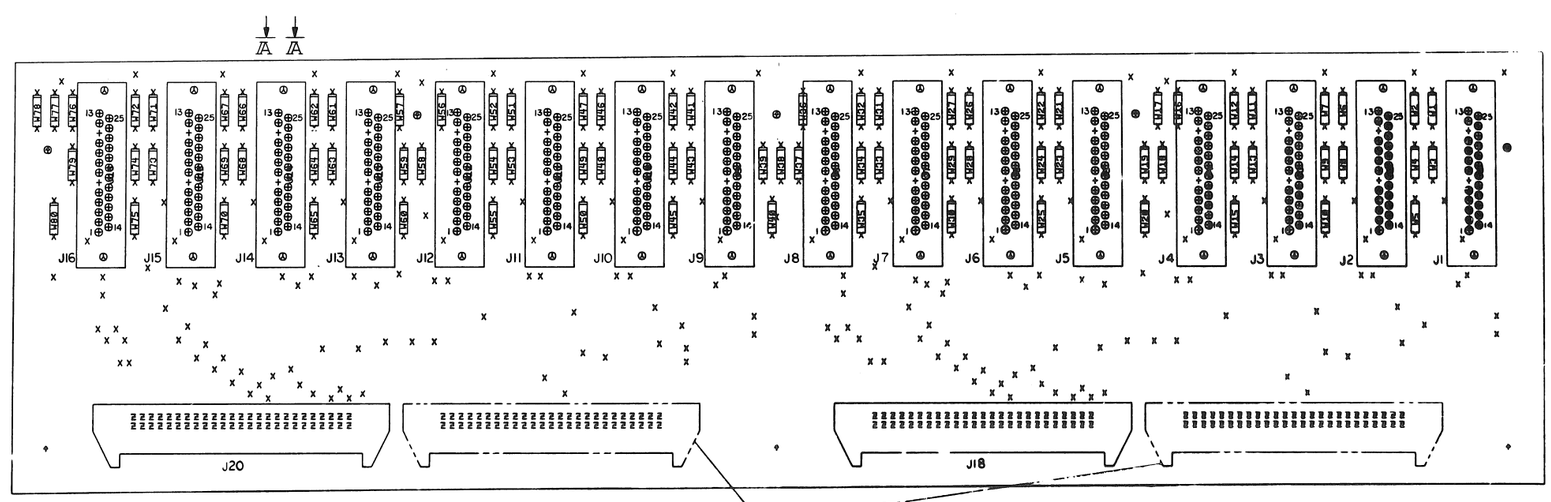

NOTES:
1. BOARD MUST BE DRILLED ON TRUE DRILL MACHINE.
2. .166 HOLES ARE CRITICAL
3. CONN. BLOCKS IN PHANTOM ARE OPTIONAL.

CHG	CHANGE NO.	REV

ETCH REV.
P.C. DESIGN DATA BOX REV.

SIGNATURES	DATE
DRN.	
CHK'D.	
ENG.	
PROJ. ENG.	
PROD.	
SCALE 2/1	
SHT. OF	
NEXT HIGHER ASSY.	

digital

TITLE PANEL, EIA DISTRIB

SIZE CODE NUMBER
E UA 541928-0-0

TITLE
SIZE
SCALE
SHEET
DWG

TITLE	SIZE	CODE	NUMBER
EIA DISTRIBUTION PANEL	E	UA	5411928
SCALE / SHEET 2 OF 3	DIST.		

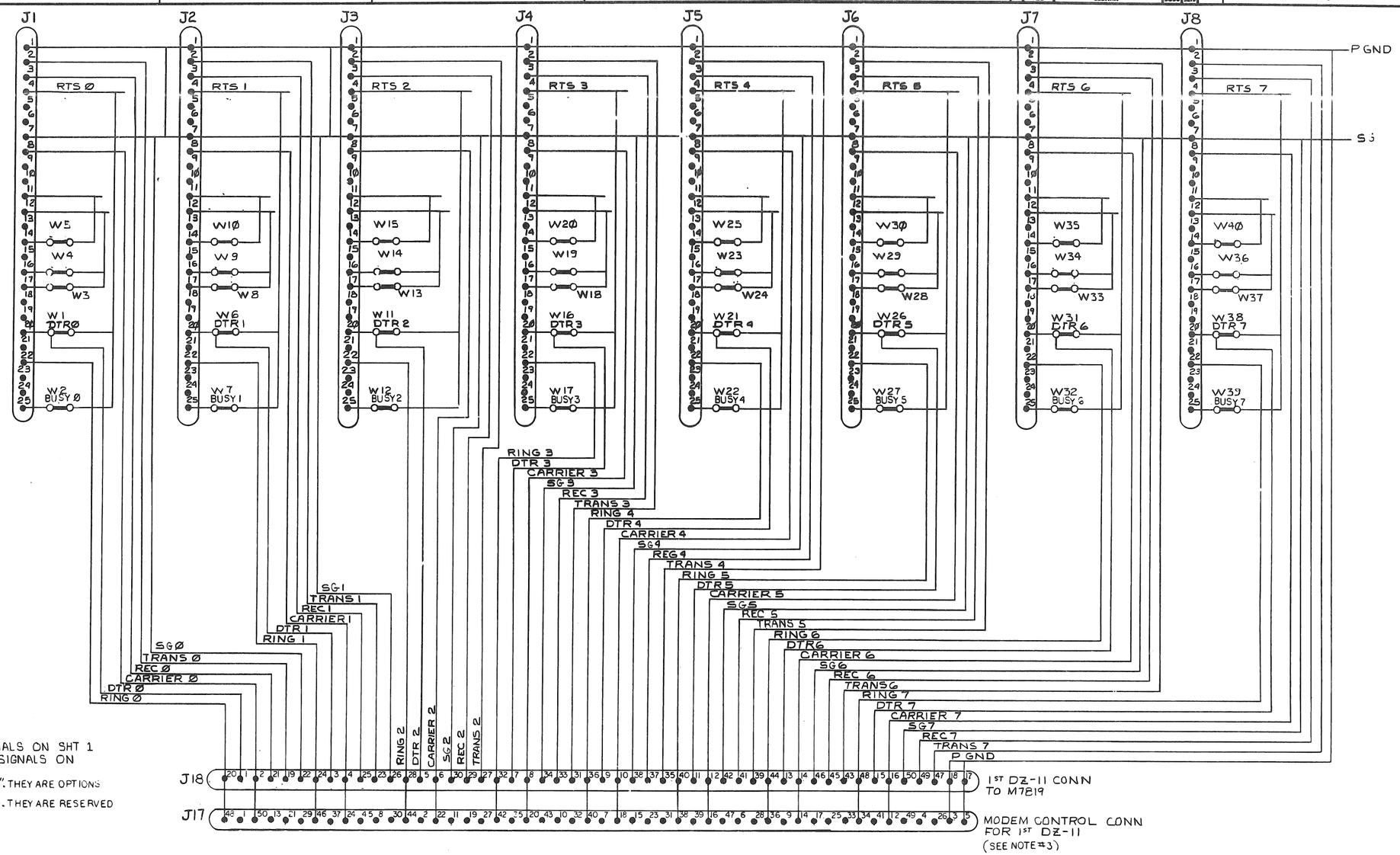

NOTES:

1. EXCEPT FOR PGND, SIGNALS ON SHT 1 DO NOT CONNECT WITH SIGNALS ON SHT 2.
2. ALL JUMPERS ARE NORMALLY "IN". THEY ARE OPTIONS RESERVED FOR FUTURE USE.
3. J17 AND J19 ARE NOT INSTALLED. THEY ARE RESERVED FOR FUTURE USE.

REVISIONS			
CHK	CHANGE NO.	#	REV.
—	DEPARTURATED		
	5411928-0001		C
H. Pinnavaia 6-4-76			
R.A.CORMIER			

DRN. MD	Nov 11 1975	FIRST USED ON H317E	digital
CHK'D	11/21/75	TITLE DZ11 EIA DIST PANEL	
ENG.	3-26-76		
PROJ ENGR.	3-26-76		
PROD.	3-26-76		
NEXT HIGHER ASSY. E-AH-5411928-0-5		SIZE D CODE CS NUMBER 5411928-0-1 REV.	
SCALE —			
SHEET 1 OF 2		DIST.	

DEC FORM NO. DRD 102-D

1ST DZ-11 CONNECTIONS

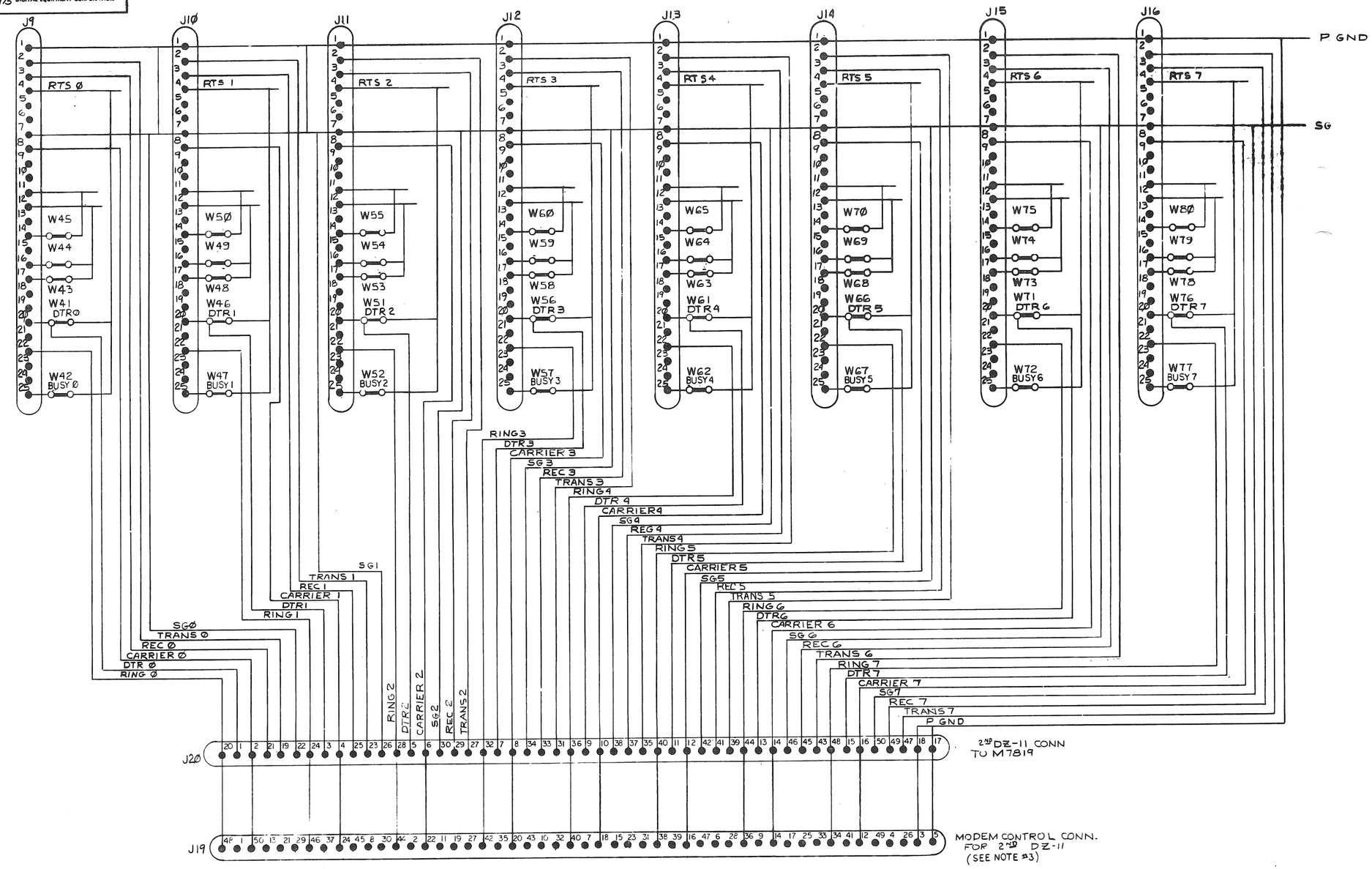

REVISIONS		
CHK	CHANGE NO.	REV.

TITLE	SIZE	CODE	NUMBER	REV.
DZ11 EIA DIST PANEL	D	CS	5411928-Ø-1	C
SCALE — / — / —	SHEET 2 OF 2		DIST.	

DEC FORM NO. DRD 138

LEGEND	
NUMBER	DIM. "X" VAR.
BCØ5W - Ø2	2 FT. ± 1 IN.
BCØ5W - Ø4	4 FT. ± 1 IN.
BCØ5W - 15	15 FT. ± 3 IN.

NOTE
1. THIS CABLE IS POINT TO POINT. PIN #1 TO PIN #50 AND PIN #2 TO PIN #49 ETC., ETC..
2. STRIP BACK SHIELDING APPROX 1 INCH

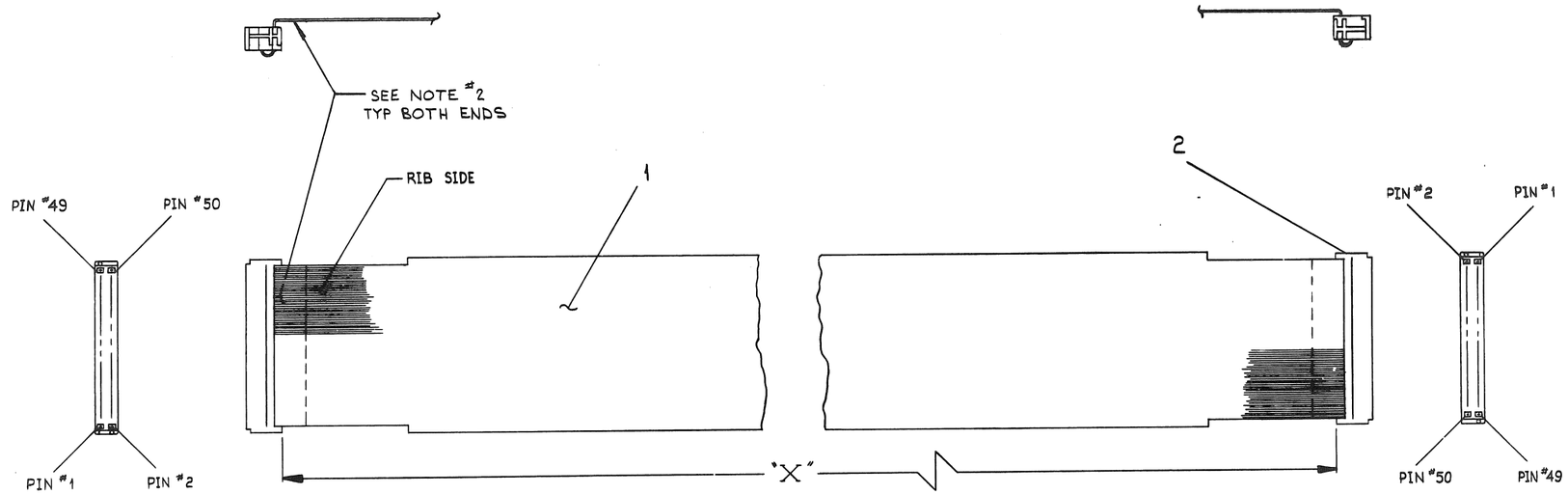

QTY.	DESCRIPTION	PART NO.	ITEM NO.
2	CABLE CONN.,50 COND.FLUTE	1211664	2
1	CABLE, 50 COND FLATSHIELDED	170C004-01	1

PARTS LIST

FIRST USED ON OPTION/MODEL: KC341-B

DIMENSIONAL TOLERANCE
DIMENSIONS ARE MILLIMETERS / INCHES
UNLESS OTHERWISE SPECIFIED

MILLIMETERS	INCHES	ANGLES
XXX = ±0.10, XX = ±0.5, X = ±2	XXX = ±.005, XX = ±.02, X = ±.1	±0° 30'

THIRD ANGLE PROJECTION

REMOVE BURRS AND BREAK SHARP CORNERS SURFACE QUALITY ✓

MATERIAL: SEE PARTS LIST

FINISH: —

		DATE
DRN.	M. Gelner	5-15-74
CHK'D.	[illegible]	5-19-74
ENG.	[illegible]	[illegible]
PROJ. ENG.	[illegible]	[illegible]
PROD.	[illegible]	[illegible]

NEXT HIGHER ASSY.: —

SCALE: NONE
SHEET 1 OF 1

digital

TITLE: 50 CONDUCTOR SIGNAL CABLE (BCØ5W)

SIZE	CODE	NUMBER	REV.
D	1A	BCØ5W-Ø-Ø	B

DIST.

REVISIONS			
CHK	CHANGE NO.	REV.	
JCR	BCØ5W-00001	A	J CYR
JCR	BCØ5W-00002	B	J. CYR

DIGITAL FORM NO 070 100-0

SIZE	CODE	NUMBER	REV.
D	1A	BCØ5W-Ø-Ø	B

NOTES:

1. * THE BCØ5D, BCØ3M & BCØ3P CABLES ARE NOT INCLUDED IN THE DZ11 OPTION AND MUST BE ORDERED SEPARATELY.

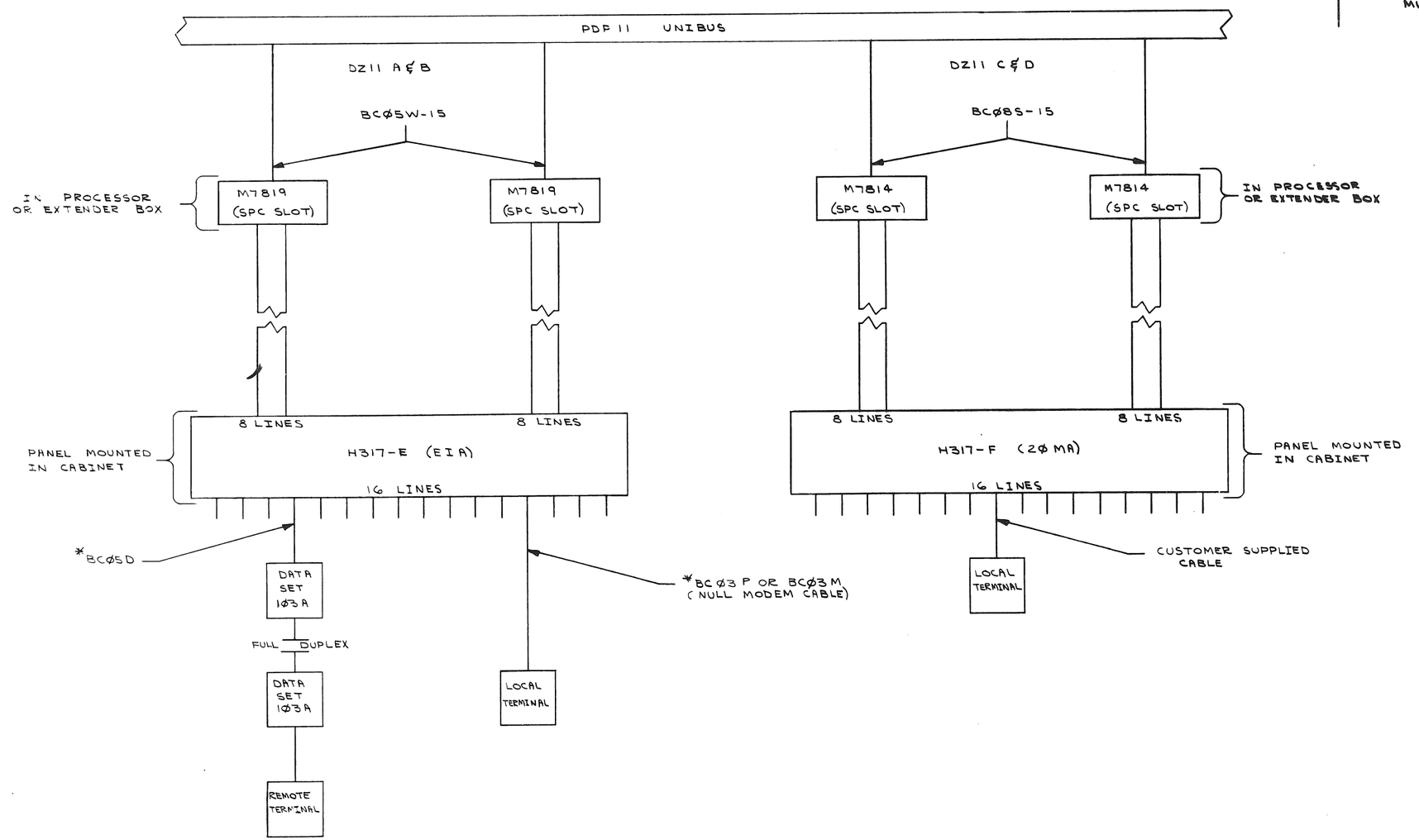

DRN.		3-1-76
CHK'D		3-19-76
ENG.		
PROJ. ENG.		
PROD.		
NEXT HIGHER ASSY.	D-UA-DZ11-Ø-Ø	
SCALE	—	
SHEET	OF	

FIRST USED ON: DZ11

digital

TITLE: SYSTEM CONNECT DIAGRAM

SIZE	CODE	NUMBER	REV.
D	BD	DZ11-Ø-8	

DIST.

REVISIONS: REV. | CHANGE NO. | CHK

DCC FORM NO. DRD 102-D

NOTES:
1. DO NOT REMOVE SHIPPING BRACKET.
2. TEST CONNECTORS ITEMS 2 & 5 (NOT SHOWN) ARE USED FOR TESTING DZ11

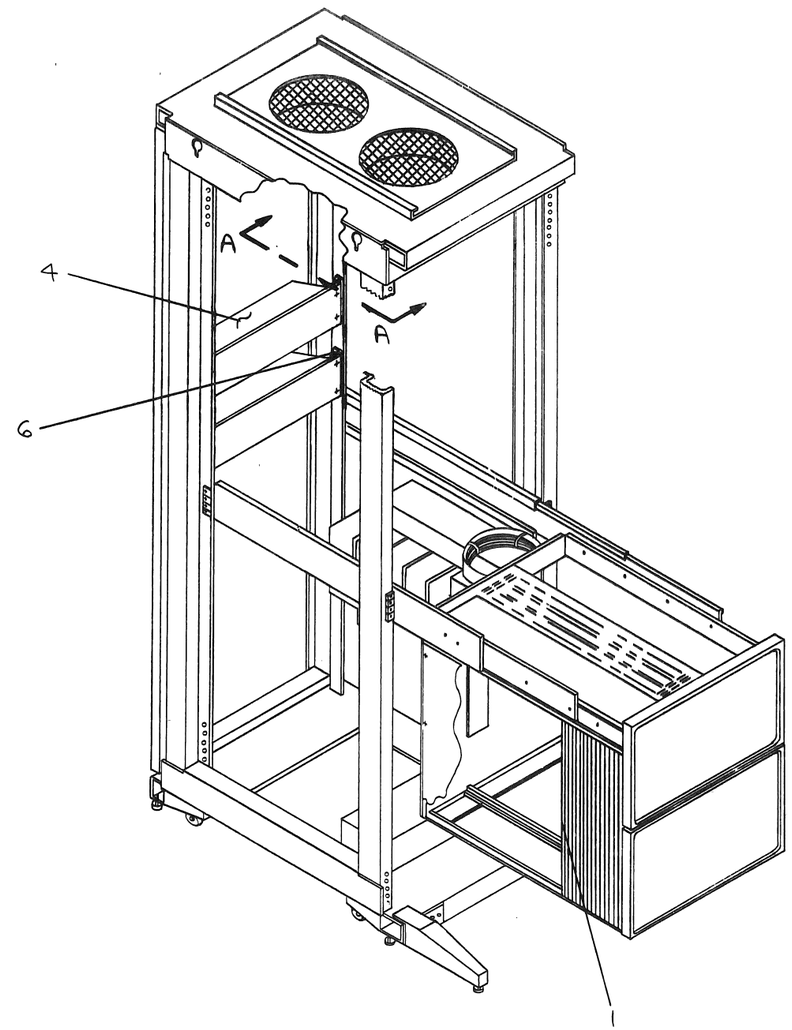

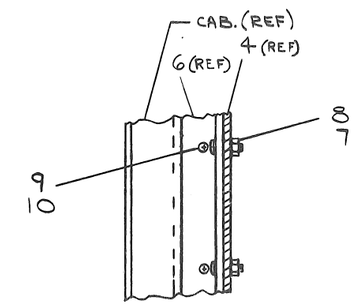

SECTION A-A

FOR PARTS LIST SEE A-PL-DZ11-Ø-Ø

DESCRIPTION	DWG./PART NO.	ITEM NO.

UNLESS OTHERWISE SPECIFIED DIMENSIONS ARE IN INCHES

ANGLES ±0° 30'	CLASS OF ACCURACY (CHECK ONE)	NOMINAL DIMENSION RANGE INCHES					
		OVER 0 TO 0.3	OVER 0.3 TO 1.3	OVER 1.3 TO 4.0	OVER 4.0 TO 12.0	OVER 12.0 TO 40.0	OVER 40.0 TO 80.0
SURFACE QUALITY IN ✓	MEDIUM ☐	±.004	±.008	±.012	±.016	±.024	±.04
MICROINCHES	PREFERRED ☐	±.012	±.016	±.020	±.04	±.063	±0.1

QUANTITY & VARIATION

THIRD ANGLE PROJECTION

REMOVE BURRS AND BREAK SHARP CORNERS

DO NOT SCALE DWG

MATERIAL SEE PARTS LIST

FINISH —/—/—

DRN. R. Jones 5-4-76
CHK'D R. Carpenter 5-19-76
ENG. [illegible] 5-21-76
PROJ. ENG. [illegible] 5-21-76
PROD. [illegible] 5-21-76

NEXT HIGHER ASSY. B-DD-DZ11-Ø

SCALE NONE

SHEET 1 OF 4

FIRST USED ON DZ11

digital

TITLE UNIT ASSY DZ11

SIZE	CODE	NUMBER	REV.
D	UA	DZ11-Ø-Ø	

DIST.

REV.	CHANGE NO.	CHK
	REVISIONS	

DEC FORM NO. 040 100-C

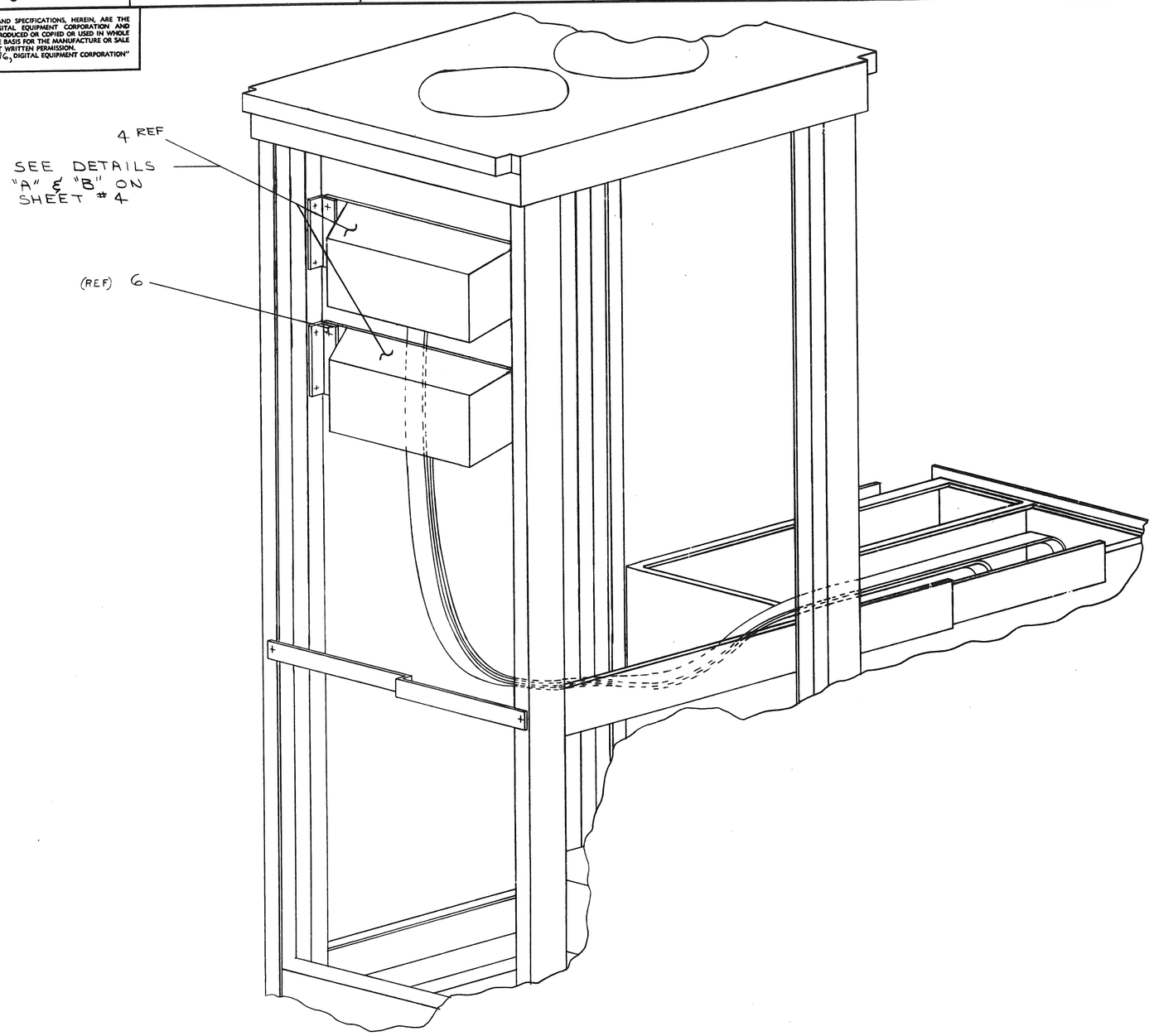

REVISIONS		
CHK	CHANGE NO.	REV.

TITLE UNIT ASSY DZ11	SIZE D	CODE UA	NUMBER DZ11-Ø-Ø
SCALE NONE	SHEET 2 OF 4	DIST.	REV.

DEC FORM NO. DRD 137

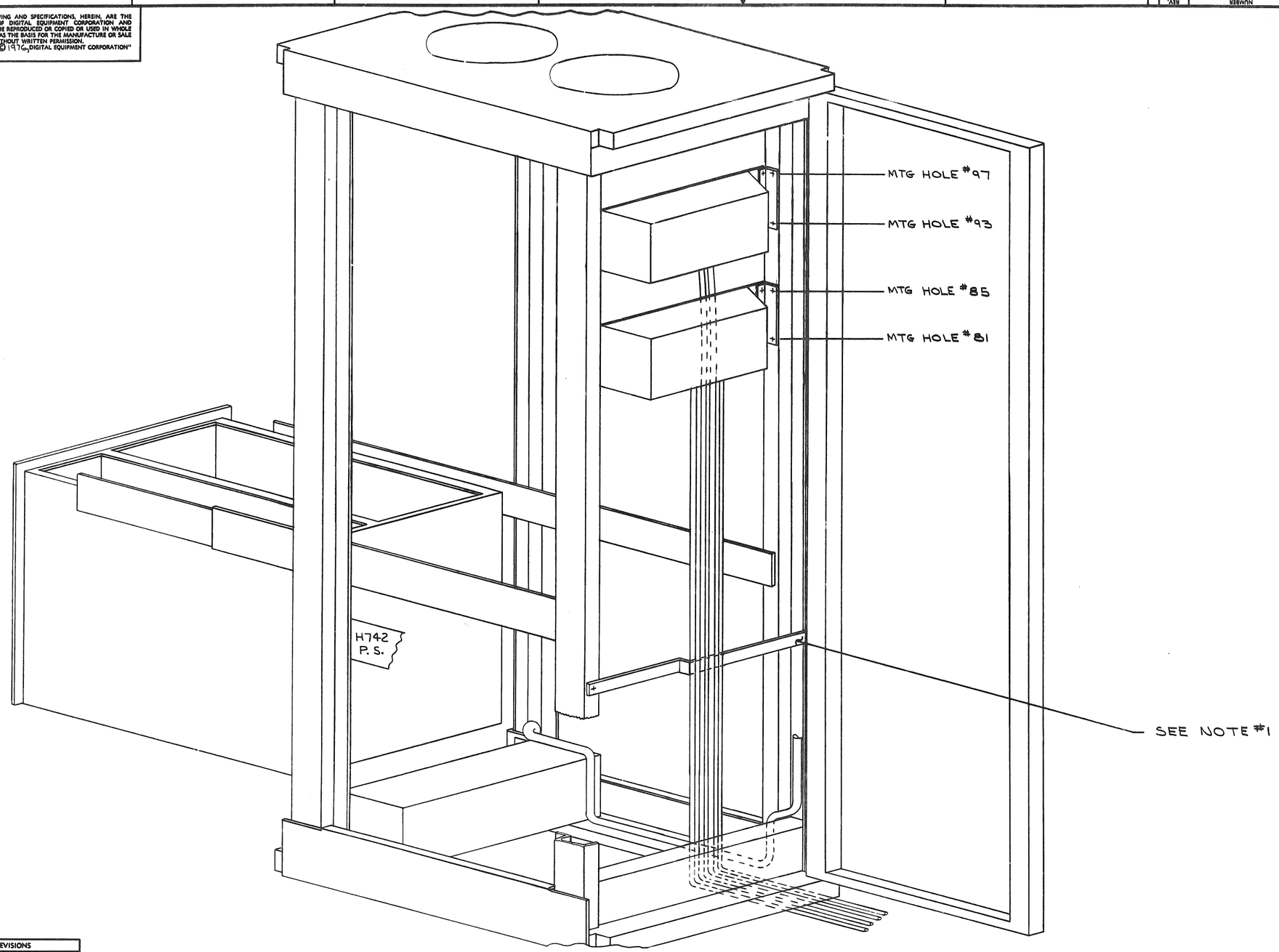

REVISIONS		
CHK	CHANGE NO.	REV.

TITLE	SIZE	CODE	NUMBER	REV.
UNIT ASSY DZ11	D	UA	DZ11-Ø-Ø	
SCALE NONE / SHEET 3 OF 4	DIST.			

DEC FORM NO DRD 137

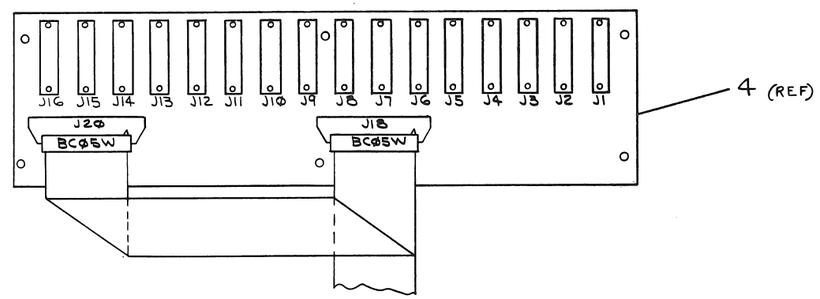

DETAIL A

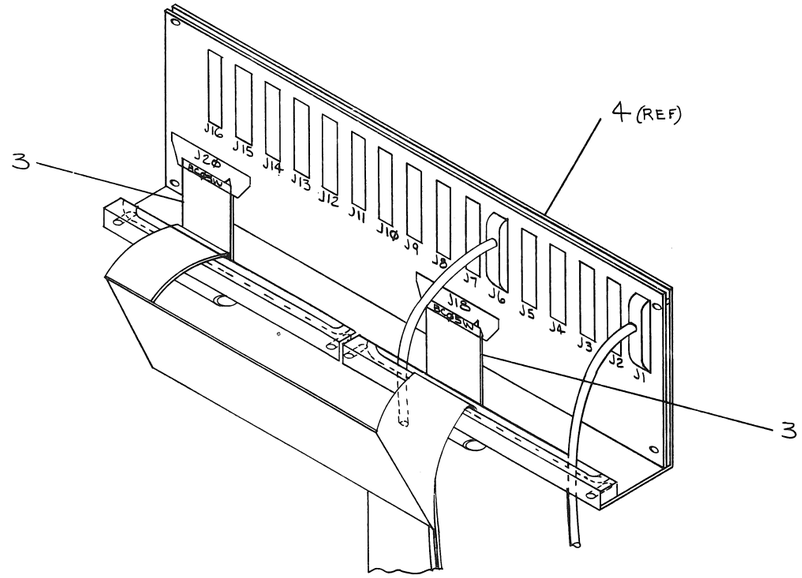

DETAIL B

REVISIONS		
CHK	CHANGE NO.	REV.

TITLE	SIZE	CODE	NUMBER	REV.
UNIT ASSY DZ11	D	UA	DZ11-Ø-Ø	
SCALE NONE / SHEET 4 OF 4	DIST.			

DEC FORM NO. DRD 137

DIGITAL EQUIPMENT CORPORATION
MAYNARD, MASSACHUSETTS

PARTS LIST

MADE BY K. DAVIS DATE 5-4-76	CHECKED P. Cappellanco DATE 14 May 76	SECTION
ENG Robert A. Portmier DATE 5-13-76	PROD Fenton Cabel DATE 5-14-76	ISSUED SECT.

ITEM NO.	DWG NO./PART NO.	DESCRIPTION	QUANTITY/VARIATION DZ11-A	DZ11-B	DZ11-E
1	D-UA-M7819-Ø-Ø	8 LINE EIA ASYNCHRONOUS MUX	1	1	2
2	C-IA-H327-Ø-Ø	CONNECTOR, TURN AROUND	1	1	2
3	D-IA-BCØ5W-15	5Ø CONDUCTOR SIGNAL CABLE (BCØ5W)	1	1	2
4	D-UA-H317-E-Ø	H317 CABLE BOX ASSY	1	-	1
5	D-CS-H325-Ø-1	H325 TEST CONNECTOR	1	-	1
6	C-MD-7414386-0-0	BRACKET, PANEL	2	-	2
7	9006071-03	SCR,PH,TRUSS,HD, 10-32 X .38	4	-	4
8	9006565-00	NUT, KEP 10-32	4	-	4
9	9006073-02	SCR,PH,FL,HD, 10-32 X .50	4	-	4
10	9007786-00	NUT, SPEED 10-32	4	-	4
11	D-BD-DZ11-Ø-8	SYSTEM CONNECT DIAGRAM	REF	REF	REF

TITLE	ASSY NO.	SIZE	CODE	NUMBER	REV.	ECO NO.
PARTS LIST DZ11	D-UA-DZ11-Ø-Ø SHEET 1 OF 1	A	PL	DZ11-Ø-Ø DIST.		

DEC FORM DEC 16-(325)-1031-N870
DRA 110

DRAWING DIRECTORY

FOR FIELD MAINTENANCE PRINT SET SEE:

B-TC-DZ11-Ø-6 (DA11-A & E)
B-TC-DZ11-Ø-1Ø (DZ11-B)

UNIT VARIATIONS

VAR	TITLE
DZ11-A	8 LINE DBL BUF ASYNC EIA MUX
DZ11-B	DZ11-A MINUS DISTRIBUTION PANEL
DZ11-E	16 LINE ASYNC MUX EIA
	(DZ11-A + DZ11-B)

REVISIONS	
REV.	
CHANGE NO.	
CHK	

USED ON OPTION/MODEL	
DZ11	
SHEET 1 OF 3	

DRN. K. DAVIS	DATE 5-6-76	TITLE EIA ASYNCHRONOUS MUX DZ11
CHK'D. Pizzarelli	DATE 5-19-76	digital
PROJ. ENG.	DATE	SIZE B / CODE DD / NUMBER DZ11-Ø / REV
PROD.	DATE	DIST.

DPB 106A

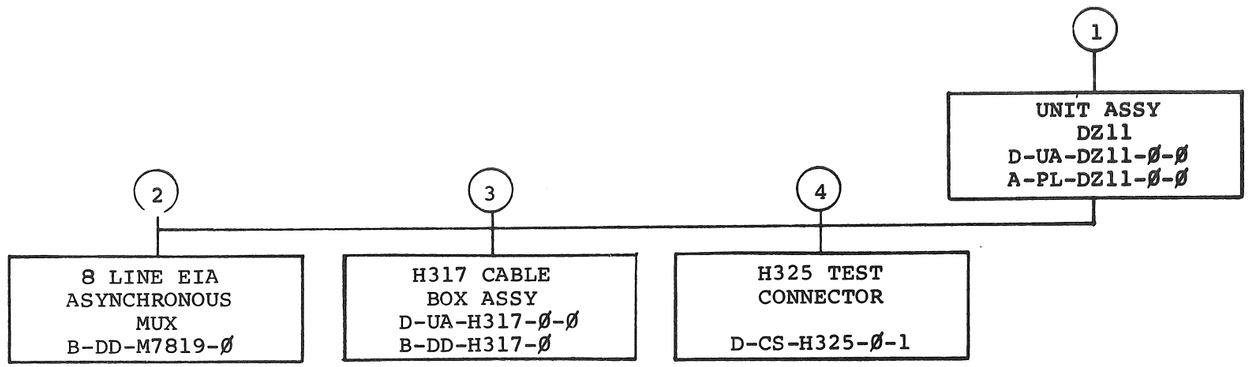

TITLE		SIZE	CODE	NUMBER	REV
EIA ASYNCHRONOUS MUX DZ11	SHEET 2 OF 3	B	DD	DZ11-Ø	

DRB 107
DEC 16-(325)-1062-3-N871

FIND NO.	DRAWING NO.	DESCRIPTION	TYPE
1	MPØØ132	DZ11 FIELD MAINTENANCE PRINT SET (VOL 1)	-
	MPØØ136	DZ11 FIELD MAINTENANCE PRINT SET (VOL 2)	-
			-
	B-TC-DZ11-Ø-6	DZ11 FIELD MAINTENANCE PRINT SET (TC) DZ11A, DZ11E	-
	B-TC-DZ11-Ø-1Ø	DZ11 FIELD MAINTENANCE PRINT SET (TC) DZ11B	-
			-
	D-UA-DZ11-Ø-Ø	UNIT ASSY DZ11	E/M
	A-PL-DZ11-Ø-Ø	EIA ASYNCHRONOUS MUX DZ11	E/M
	C-IA-H327-Ø-Ø	CONNECTOR, TURN AROUND	E/M
	D-IA-BCØ5W-Ø-Ø	5Ø CONDUCTOR SIGNAL CABLE (BCØ5W)	E/M
	C-MD-7414386-0-0	BRACKET, PANEL	M
	A-PL-DZ11-Ø-5	SHIPPING LIST	M
	D-BD-DZ11-Ø-8	SYSTEM CONNECT DIAGRAM	E
2	B-DD-M7819-Ø	8 LINE EIA ASYNCHRONOUS MUX	E/M
3	D-UA-H317-Ø-Ø	H317 CABLE BOX ASSY	E/M
	B-DD-H317-Ø	H317 CABLE BOX ASSY	E
4	D-CS-H325-Ø-1	H325 TEST CONNECTOR	E/M
	K-CO-H325-Ø-4	X-Y COORDINATE HOLE LOCATION	M
	D-AH-H325-0-5	ASSY/DRILLING HOLE LAYOUT	M
	B-MH-H325-Ø-6	MODULE ECO HISTORY	E/M

TYPE: E ELECTRICAL
M MECHANICAL
E/M ELECTRO/MECHANICAL

digital

TITLE EIA ASYNCHRONOUS MUX DZ11

SHEET 3 OF 3 | SIZE B | CODE DD | NUMBER DZ11-Ø | REV

DRB 108A

DIGITAL EQUIPMENT CORPORATION
MAYNARD, MASSACHUSETTS

PARTS LIST

MADE BY K. DAVIS DATE 4 MAY 76	CHECKED P. Coppolranco DATE 14 May 76	SECTION
ENG [illegible] DATE 5-13-76	PROD [illegible] DATE 5-14-76	ISSUED SECT.

ITEM NO.	DWG NO./PART NO.	DESCRIPTION	DZ11-A	DZ11-B	DZ11-E									
1	D-UA-M7819-Ø-Ø	8 LINE EIA ASYNCHRONOUS MUX	1	1	2									
2	C-IA-H327-Ø-Ø	CONNECTOR, TURN AROUND	1	1	2									
3	D-IA-BCØ5W-15	5Ø CONDUCTOR SIGNAL CABLE (BCØ5W)	1	1	2									
4	EK-DZ11-MM-ØØ	MANUAL	1	-	1									
5	ZJ223-RB	DIAGNOSTIC SOFTWARE KIT	1	-	1									
6	B-TC-DZ11-Ø-6	DZ11-A & E PRINT SET	1	-	1									
7	B-TC-DZ11-Ø-10	DZ11-B PRINT SET	-	1	-									
8	D-CS-H325-Ø-1	H325 TEST CONNECTOR	1	-	1									
9	D-UA-H317-E-Ø	H317 CABLE BOX ASSY	1	-	1									
10	MAINDEC-11-DXQLL	DEC/X11 LIBRARY *	1	-	1									
		*THIS LIBRARY IS A BOOK THAT INCLUDES THE DZ11 DEC/X11 SYSTEM EXERCISER LISTING (MAINDEC-11-DXDZA-REV-D).												

TITLE	ASSY NO.	SIZE	CODE	NUMBER	REV.	ECO NO.
SHIPPING LIST DZ11	D-UA-DZ11-Ø-Ø SHEET 1 OF 1	A	PL	DZ11-Ø-5 DIST.		

DEC FORM DEC 16-(325)-1031-N870
DRA 110

* INDICATES NOT USED

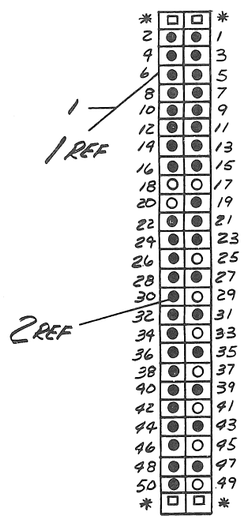

VIEW A-A
SCALE: NONE

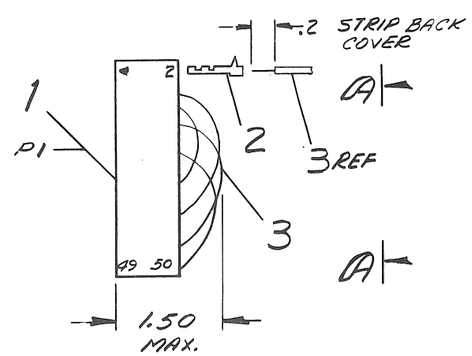

WIRE TABLE

ITEM NO	DESCRIPTION AWG	DESCRIPTION COLOR	FROM CONNECTION	FROM WITH	TO CONNECTION	TO WITH
3	#26	GRN	P1-1	#2	P1-4	#2
					P1-19	
			P1-3		P1-2	
					P1-23	
			P1-5		P1-8	
					P1-27	
			P1-7		P1-6	
					P1-31	
			P1-9		P1-12	
					P1-35	
			P1-11		P1-10	
					P1-39	
			P1-13		P1-16	
					P1-43	
			P1-15		P1-14	
					P1-47	
			P1-20		P1-26	
			P1-24		P1-22	
			P1-28		P1-34	
			P1-32		P1-30	
			P1-36		P1-42	
			P1-40		P1-38	
			P1-44		P1-50	
3	#26	GRN	P1-48	#2	P1-46	#2

QTY.	DESCRIPTION	PART NO.	ITEM NO.
A/R	WIRE #26 AWG (GRN)	9107636-55	3
40	SOCKET, CRIMP	1210089-04	2
1	HOUSING, SOCKET	1210918-10	1

PARTS LIST

FIRST USED ON OPTION/MODEL: DZ11

UNLESS OTHERWISE SPECIFIED DIMENSION IN INCHES

TOLERANCES

DECIMALS	ANGLES
.xxx = .005	±0 30'
.xx = .02	
.x = .1	

REMOVE BURRS AND BREAK SHARP CORNERS SURFACE QUALITY

MATERIAL: SEE PARTS LIST

FINISH: —

		DATE
DRN.	Robert	3/22/75
CHK'D.		
ENG.		
PROJ. ENG.		
PROD.		

NEXT HIGHER ASSY.: D-UA-DZ11-Ø-Ø

SCALE: NONE

SHEET 1 OF 2

digital EQUIPMENT CORPORATION MAYNARD, MASSACHUSETTS

TITLE: CONNECTOR, TURN AROUND

SIZE	CODE	NUMBER	REV.
C	IA	H327-Ø-Ø	

DIST

REVISIONS

REV.	CHANGE NO.	CHK

C IA H327-Ø-Ø

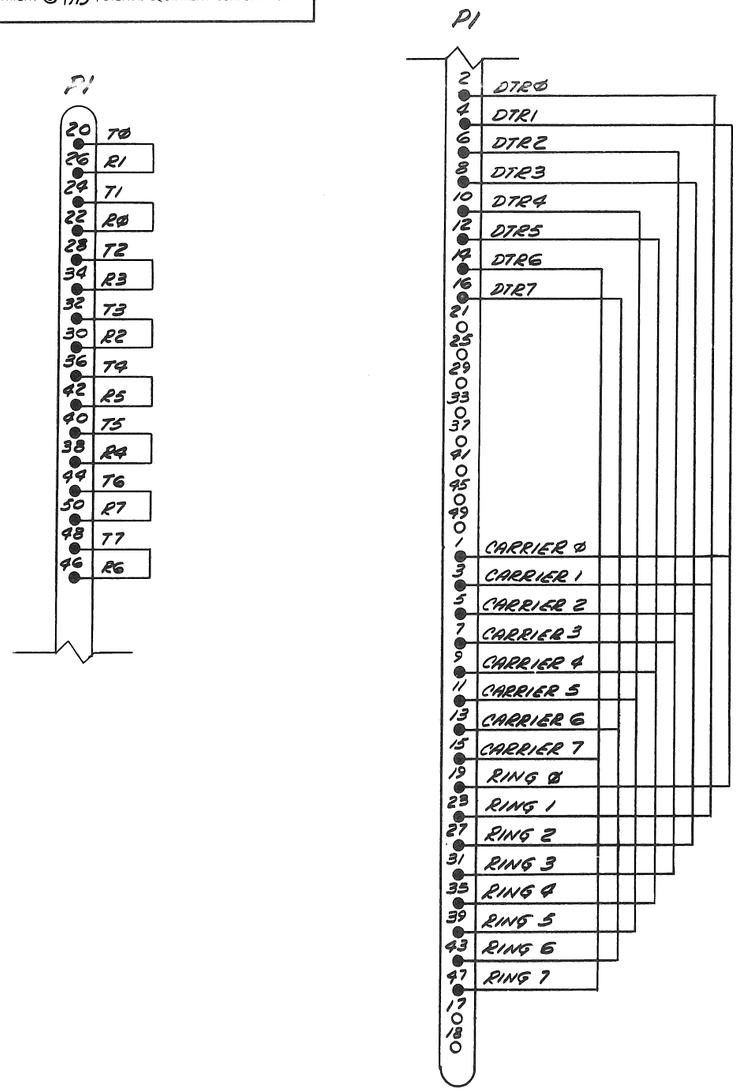

FIRST USED ON OPTION/MODEL	QTY.	DESCRIPTION	PART NO.	ITEM NO.
DZ11		PARTS LIST		

UNLESS OTHERWISE SPECIFIED
DIMENSION IN INCHES
TOLERANCES

DECIMALS	ANGLES
.xxx = .005 .xx = .02 .x = .1	±0 30'

REMOVE BURRS AND BREAK SHARP CORNERS SURFACE QUALITY

MATERIAL —"—

FINISH —"—

DEN.		DATE 8/20/75
CHK'D.		DATE
ENG.		DATE
PROJ. ENG.		DATE
PROD.		DATE

NEXT HIGHER ASSY. D-UA-DZ11-0-0

SCALE NONE

SHEET 2 OF 2

digital EQUIPMENT CORPORATION
MAYNARD, MASSACHUSETTS

TITLE
CONNECTOR, TURN AROUND

SIZE	CODE	NUMBER	REV.
C	IA	H327-0-0	

DIST

REVISIONS

REV	CHANGE NO	CHK

C IA H327-0-0

NOTES:

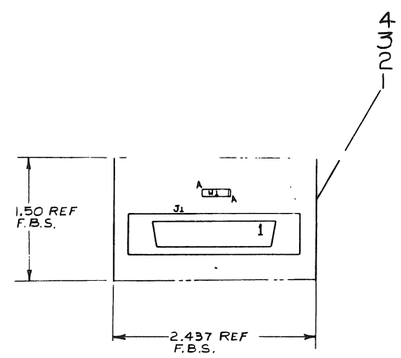

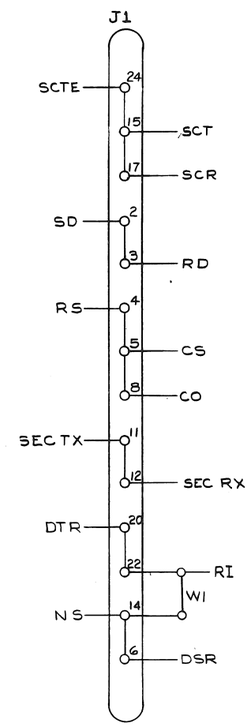

QTY	REF. DESIGNATION	DESCRIPTION	PART NO.	ITEM NO.
REF		X-Y COORDINATE HOLE LOC	KCO-H325-0-4	1
REF		ASSY/DRILLING HOLE LAYOUT	D-AH-H325-0-5	2
REF		MODULE ECO HISTORY	B-MH-H325-0-6	3
1		ETCHED CIRCUIT BOARD	50116	4
1	J1	CONNECTOR	1210247	5
1	W1	INSULATED JUMPER WIRE	9009,85	6

PARTS LIST

ETCH BOARD REV. C

FIRST USED ON OPTION MODEL: DV11

IC TYPE	GND	+5V

GND AND 5V ARE USUALLY PIN 7 AND 14 RESPECTIVELY EXCEPTIONS ARE STATED ABOVE

IC PIN LOCATIONS

DEC NO.	EIA NO.	DEC NO.	EIA NO.

SEMICONDUCTOR CONVERSION CHART

REV.	CHANGE NO.	CHK
A	H325-00001	F ZERESKI
B		

REVISIONS

DRN. 4/23/75
CHKD. 4/23/75
ENG. 4/24/75
PROJ. ENG. 4/24/75
PROD. 4-24-75

NEXT HIGHER ASSY: D-UA-DV11-0-0

SCALE —

SHEET 1 OF 1

digital

TITLE: H325 TEST CONNECTOR

SIZE D | CODE CS | NUMBER H325-0-1 | REV. A

DIST.

DEC FORM NO. DOD 139.0

WIRE TABLE

ITEM NO.	DESCRIPTION AWG	DESCRIPTION COLOR	FROM CONNECTION	FROM WITH	TO CONNECTION	TO WITH	REMARKS
3	22	BLK	P1-7 NOTE #4	4	P2-7 NOTE #4	4	
3		RED	P1-2	8	P2-3	8	
3		SHIELD	P1-1 NOTE #2 & 4	4 & 7	P2-1 NOTE #2	4 & 7	
3		BLK	P1-7 NOTE #4	4	P2-7 NOTE #4	4	
3		WHT	P1-3	8	P2-2	8	
3		SHIELD	P1-1 NOTE #2 & 4	4 & 7	P2-1 NOTE #2	4 & 7	
3		BLK	P1-6	8	P2-20	8	
3		GRN	P1-20	8	P2-6	8	
3	22	SHIELD	SEE NOTE #3	–	SEE NOTE #3	–	

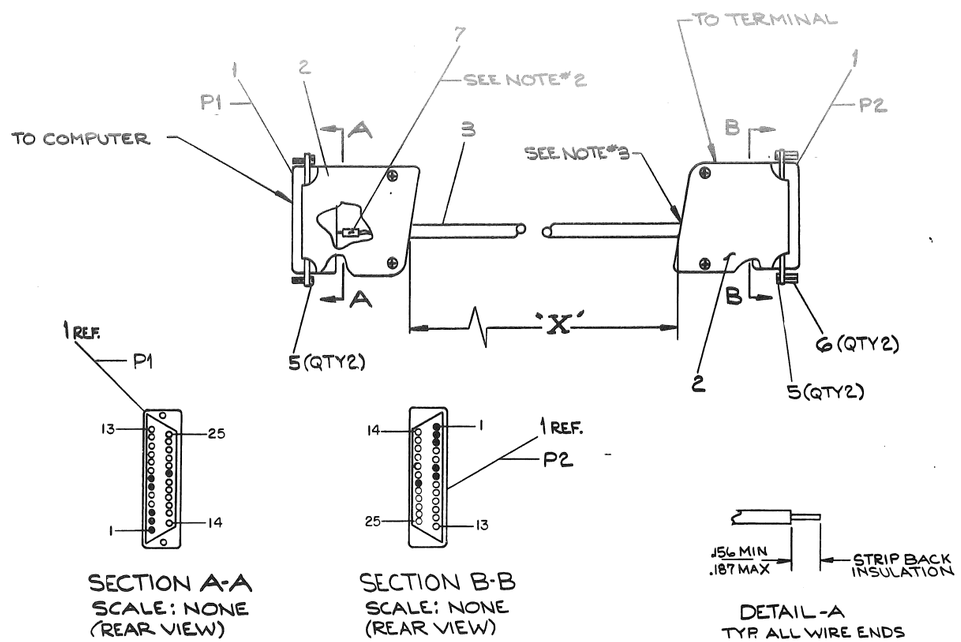

LEGEND

NUMBER	VARIATION	REMARKS
	DIM "X"	
BCØ3M-Ø1	1 FT.	PREASSEMBLED
BCØ3M-25	25 FT.	PREASSEMBLED
BCØ3M-AØ	100 FT.	PREASSEMBLED
BCØ3M-B5	250 FT.	PARTIALLY ASSEMBLED
BCØ3M-EØ	500 FT.	PARTIALLY ASSEMBLED
BCØ3M-LØ	1000 FT.	PARTIALLY ASSEMBLED
BC03M-H5	750 FT.	PARTIALLY ASSEMBLED

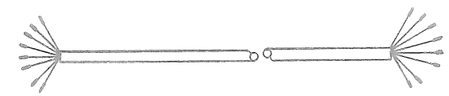

STEP #1

INSTALL ITEM #4, 7 AND 8 TO ITEM #3 (CABLE) PER WIRE TABLE

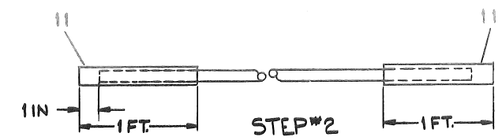

STEP #2

COVER BOTH ENDS WITH ITEM #11 (TUBING, HEAT SHRINK) PER ABOVE DIM'S

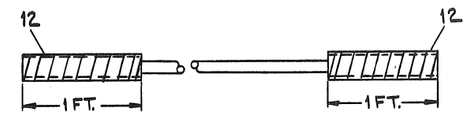

STEP #3

COVER BOTH ENDS WITH ITEM #12 (TAPE) PER ABOVE DIM'S

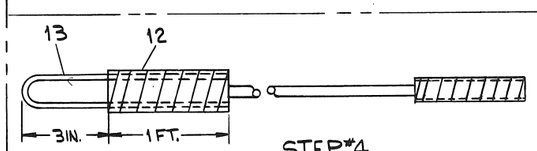

STEP #4

INSTALL ITEM #13 TO ITEM #3 BY USING ITEM #12 (TAPE), PER ABOVE DIM'S
THE WIRE LOOP AT END OF CABLE IS USED TO PULL CABLE THREW CONDUIT. PIPE, AT INSTALLATION.

NOTES:

1. VARIATIONS AND LENGTHS SHOWN IN LEGEND ARE STANDARD AND ARE SPECIFIED BY NUMERIC DESIGNATION IN FOOT INCREMENTS, THE TOLERANCE ON DIMENSION "X" WILL BE ± 2% OF THE FOOT INCREMENT.
2. DRAIN WIRES TO BE ENCLOSED WITH ITEM #7 (TUBING) FROM END OF CABLE JACKET TO POINT WERE THEY ENTER CONTACT.
3. CUT BACK DRAIN WIRE TO OUTER INSULATION ON BOTH ENDS.
4. THERE ARE TWO WIRES INSTALLED IN EACH #18-20 GA CONTACT (ITEM #4)
5. USE INSERTION/EXTRACTION TOOL (ITEM #9) TO CONSTRUCT CABLE. THIS PIECE IS DISCARDED AFTER USE.
6. 1 FOOT, 25 FOOT AND 100 FOOT CABLES ARE PREASSEMBLED. ALL OTHERS ARE PARTIALLY ASSEMBLED.
7. STEPS 1 THRU 4 ARE FOR CABLE LENGTHS OVER 100 FT.

REFERENCE INFORMATION

USE CRIMP TOOL TYPE M22520/1-01 WITH THIBS LOCATOR

CABLES OVER 100 FT ARE TO BE STOCKED IN KIT FORM AS FOLLOWS PUT ITEMS 1, 2, 5, 6, 9 AND 1 (ONE) COPY OF THIS PRINT INTO PLASTIC BAG (ITEM #10). FOLD OVER CABLE (ITEM #3) AND STAPLE TOGETHER.

BCØ3M-H5	BCØ3M-LØ	BCØ3M-EØ	BCØ3M-B5	BCØ3M-AØ	BCØ3M-25	BCØ3M-01	DESCRIPTION	DWG./PART NO.	ITEM NO.
A/R	A/R	A/R	A/R	–	–	–	WIRE #14 AWG (2 FT 6 IN LG)	9107370-00	13
A/R	A/R	A/R	A/R	–	–	–	TAPE (ROLL)	9009507	12
A/R	A/R	A/R	A/R	–	–	–	TUBING (HEAT SHRINK)	9107252-00	11
1	1	1	1	–	–	–	BAG, PLASTIC	9905129-21	10
1	1	1	1	–	–	–	TOOL, INSERT/EXTRACT	4700024	9
8	8	8	8	8	8	8	SOCKET #22	1212583-0	8
A/R	A/R	A/R	A/R	A/R	A/R	A/R	TUBING #18 GA (NAT)	9107278-11	7
2	2	2	2	2	2	2	SPACER #4-40 X .25 LG.	9008496	6
4	4	4	4	4	4	4	SCR. RETAINER (MALE)	9009722	5
4	4	4	4	4	4	4	SOCKET #18-20	1212583-1	4
A/R	A/R	A/R	A/R	A/R	A/R	A/R	CABLE	9107723	3
2	2	2	2	2	2	2	HOOD	1210493-50	2
2	2	2	2	2	2	2	PLUG	1211354	1

QUANTITY & VARIATION

UNLESS OTHERWISE SPECIFIED DIMENSIONS ARE IN INCHES

ANGLES ±0° 30'

SURFACE QUALITY IN MICROINCHES

CLASS OF ACCURACY (CHECK ONE)

	NOMINAL DIMENSION RANGE INCHES					
	OVER 0 TO 0.3	OVER 0.3 TO 1.2	OVER 1.2 TO 4.0	OVER 4.0 TO 12.0	OVER 12.0 TO 40.0	OVER 40.0 TO 80.0
MEDIUM	±.004	±.008	±.012	±.016	±.024	±.04
PREFERRED	±.012	±.016	±.020	±.04	±.063	±0.1

THIRD ANGLE PROJECTION

REMOVE BURRS AND BREAK SHARP CORNERS

DO NOT SCALE DWG

MATERIAL SEE PARTS LIST

FINISH

DRN. 10-23-75
CHKD. 10-27-75
ENG. 10-27-75
PROJ. 7-1-75
PROD. 11-13-75

NEXT HIGHER ASSY.

SCALE 1/1

SHEET 1 OF 1

FIRST USED ON

TITLE CORD, EXTENSION NULL MODEM

SIZE D CODE IA NUMBER BCØ3M 0 0 REV. C

DIST.

REV.	CHANGE NO.	CHK	
A	BCØ3M-00001		B. SAMPSON 10-23-75
B	BCØ3M-00002		B. SAMPSON 10-27-75
C	BCØ3M-00003		B. SAMPSON 11-13-75

DEC FORM NO. DRD 100-C

WIRE TABLE

ITEM NO	DESCRIPTION AWG	DESCRIPTION COLOR	FROM CONNECTION	FROM WITH	TO CONNECTION	TO WITH
1	#22	BLK	P1-1	#4	P2-1	#4
1	#22	RED	P1-2	#4	P2-3	#4
1	#22	GRN	P1-3	#4	P2-2	#4
6	#26	GRN	P1-4	#5	P1-5	#4
1	#22	BLU			P2-8	#4
1	#22	YEL	P1-7	#4	P2-7	#4
1	#22	VIO	P1-8	#4	P2-4	#5
6	#26	GRN	P2-5	#4		
1	#22	GRY	P1-20	#4	P2-6	#5
6	#26	GRN	P2-22	#4		
1	#22	ORN	P1-6	#5	P2-20	#4
6	#26	GRN			P1-22	#4
* 1	#22	BRN	P1-15	#5	P2-17	#4
* 6	#26	GRN			P1-24	#4
* 1	#22	WHT	P1-17	#4	P2-15	#5
* 6	#26	GRN	P2-24	#4		

LEGEND

NUMBER	VARIATION DIM "X"	VARIATION DIM "Y" REF
BC03P-2	2 FT ± 1 IN.	2 FT 1 IN ± 1 IN
BC03P-25	25 FT ± 3 IN	25 FT 1 IN ± 3 IN
BC03P-50	50 FT ± 10 IN	50 FT 1 IN ± 10 IN
BC03P-80	100 FT ± 20 IN	100 FT 1 IN ± 20 IN

NOTES:

1. DO NOT USE LONG BC03P CABLES BETWEEN SYNCHRONOUS DEVICES BECAUSE THE UNSHIELDED TIMING LEADS (PIN 15 AND 17) CAN CAUSE CROSSTALK. THE BC03P-2 IS BEST FOR THIS TYPE OF APPLICATION.
2. CABLE (ITEM #1) TO GO INSIDE HOOD (ITEM 3) AT LEAST .50 AND WIRES SHOULD BE APPROXIMATELY 1.38 IN. IN LENGTH, SO THEY DON'T BUNCH INSIDE HOOD.

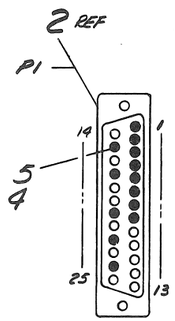

VIEW A-A
WITH HOOD REMOVED
SCALE: NONE

* SEE NOTE #1

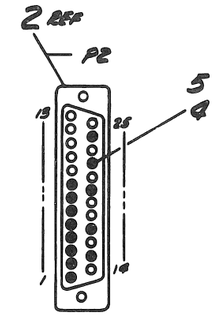

VIEW B-B
WITH HOOD REMOVED
SCALE: NONE

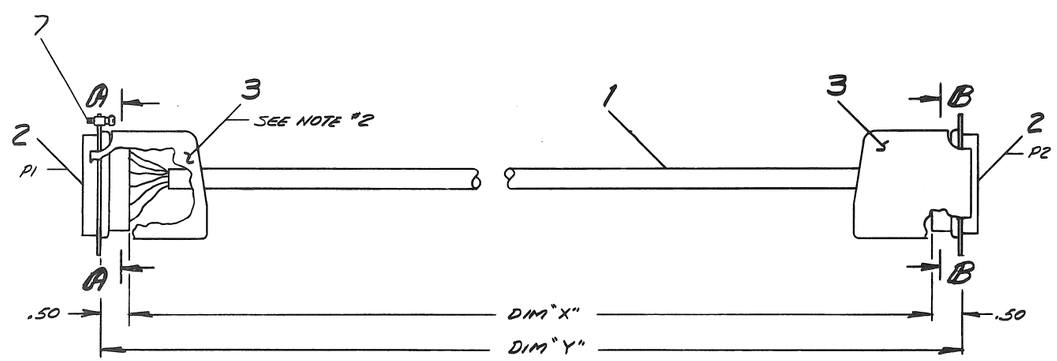

4	SCREW, CAPTIVE ASSY	9009722	7
AR	WIRE #26 AWG (GRN)	9107636-55	6
4	SOCKET, CRIMP	1210693-49	5
20	SOCKET, CRIMP	1210693-41	4
2	HOOD & STRAIN RELIEF	1210693-50	3
2	SHELL & INSERT	1210693-32	2
AR	CABLE, (10 CONDUCTOR)	9107623	1
	DESCRIPTION	DWG./PART NO.	ITEM NO.

UNLESS OTHERWISE SPECIFIED DIMENSIONS ARE IN INCHES

ANGLES ±0° 30'	CLASS OF ACCURACY (CHECK ONE)	OVER 0 TO 0.3	OVER 0.3 TO 1.2	OVER 1.2 TO 4.0	OVER 4.0 TO 12.0	OVER 12.0 TO 40.0	OVER 40.0 TO 80.0
SURFACE QUALITY IN MICROINCHES	MEDIUM ☐	±.004	±.008	±.012	±.016	±.024	±.04
	PREFERRED ☐	±.012	±.016	±.025	±.04	±.063	±0.1

QUANTITY & VARIATION

THIRD ANGLE PROJECTION

REMOVE BURRS AND BREAK SHARP CORNERS

DO NOT SCALE DWG

MATERIAL: SEE PARTS LIST

FINISH

DRAWN 12/5/75
CHK'D 12-3-75
ENG. 12/5/75
PROJ. ENG. 12-3-75
PROD. 12-3-75

NEXT HIGHER ASSY.

SCALE 1/1

SHEET 1 OF 2

FIRST USED ON D211

digital

TITLE: NULL MODEM CABLE ASSY.

SIZE	CODE	NUMBER	REV.
D	IA	BC03P-0-0	A

DIST.

REV.	CHANGE NO.	CHK	
A	BC03P-0001	J.R.	J. ROBERTS

DEC FORM NO. DRD 100-C

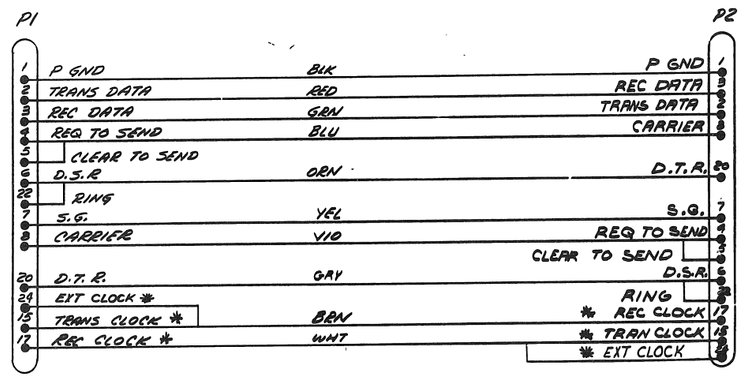

* SEE NOTE *1

REVISIONS		
CHK	CHANGE NO	REV

TITLE	SIZE	CODE	NUMBER	REV.
NULL MODEM CABLE ASSY	D	IA	BCØ3P-Ø-Ø	A
SCALE NONE	SHEET 2 OF 2	DIST.		