digital

DZ11

Engineering Drawings

Digital Equipment Corporation

FIELD MAINTENANCE PRINT SET

TABLE OF CONTENTS

UNIT VARIATIONS COVERED BY THIS PRINT SET
DZ11-A
DZ11-E

DZ11, VOL 1

Field Maintenance Print Set

Digital Equipment Corporation

PRINT SET ORDER NUMBER MPØØ132

REVISIONS		
REV.		
CHG. NO.		
DATE		

USED ON OPTION/MODEL	
DZ11	
SHEET I OF 1	

DRN. K. DAVIS	DATE 5/5/76	TITLE: DZ11 FIELD MAINTENANCE PRINT SET	digital
CHK'D P. Cappa	DATE 5-19-76		
PROJ. ENG.	DATE		
FIELD SERV.	DATE 5-18-76		

SIZE	CODE	NUMBER	REV.
B	TC	DZ11-Ø-6	
DIST.			

EN-01124-16-N6/5-(327)

DRB 124

SIZE	CODE	NUMBER	REV.
B	DD	M7819-0	D

DRAWING NO.	NO. OF SHTS	PART NO.	DESCRIPTION	REVISIONS			
D-UA-M7819-0-0	3		8 LINE EIA ASYNCHRONOUS MUX	B	B	D	E
B-PL-M7819-0-0	4		8 LINE EIA ASYNCHRONOUS MUX	B	C	D	E
D-CS-M7819-0-1	15		8 LINE EIA ASYNCHRONOUS MUX	B	C	D	E
D-AH-M7819-0-5	1		8 LINE EIA ASYNCHRONOUS MUX	B	B	C	D
		5011820	ETCHED BOARD	C	C	C	D
M7819-0-L			P.C. DESIGN DATA BASE	REF	–	–	–
M7819-0-PL			INSERTION P/L DATA BASE	REF	–	–	–
B-MH-M7819-0-6	1		MODULE ECO HISTORY	REF	–	–	–
D-BD-M7819-0-8	1		M7819 BLOCK DIAGRAM	A	A	A	A

NOTES:

REVISIONS		
DATE	CHG NO.	REV.
J.K.R. 7 JUN 76	00001	B
8-76	00002	C
1-OCT 2-76	00003	D

digital

USED ON OPTION/MODEL

DRN	R. Kyperd	3-2-76
CHK'D	R. Kyperd	3-2-76
ENG	[illegible]	3-2-76
PROD.	R. Wall	3-2-76

TITLE 8 LINE EIA ASYNCHRONOUS MUX

SIZE	CODE	NUMBER	REV.
B	DD	M7819-0	D

SHEET 1 OF 1

DRB 126 EN-01149-16-N176(325)

DIGITAL EQUIPMENT CORPORATION
PARTS LIST

MADE BY R. KOPPENAL	CHECKED Robert A. Conway	SECTION
DATE 3-1-76	DATE 3-2-76	
ENG Robert A. Conway	PROD R. Wall	ISSUED SECTION
DATE 3-2-76	DATE 3-2-76	

NOTES:

ITEM NO.	DRAWING NO.	PART NO.	DESCRIPTION	QUANTITY/VARIATION	REF DESIGNATION
1.		5011820	ETCH BOARD	1	
2.		1000025	CAP, 560PF, 100V, 5%	2	C92, C53
3.		1000018	CAP, 120PF, 100V, 5%	2	C99, C96
4.		1000024	CAP, 470PF, 100V, 5%	25	C93, C100-122, C131,
5.		1000042	CAP, 1000PF, 100V, 5%	1	C98
6.		1001610-00	CAP, 01UF, 50V	91	C1-C52, C54-C91, C130
7.		1000010	CAP, 39PF, 100V, 5%	1	C97
8.		1005306	CAP, 6.8UF, 35V, 10%	6	C123-C126, C128, C129
9.		1000021	CAP, 220PF, 100V, 5%	1	C95
10.		1000023	CAP, 330PF, 100V, 5%	1	C94
11.		1105796	DIODE, IN4004	2	D1, D5
12.		1109943	DIODE, IN4733A	2	D2, D6
13.		1103340	DIODE, IN4736A	2	D3, D7
14.		1101938	DIODE, IN4370A	2	D4, D8
15.		1905547	IC, 7474	1	E96
16.		1909705	IC, 8881	1	E72
17.		1910091	IC, 7437	2	E24, E68
18.		1910322	IC, 1488L	4	E7 - E10
19.		1910323	IC, 1489L	6	E1 - E6
20.		1910454	IC, 9318	1	E82
21		1910459-01	IC, 1602 (UART)	8	E44 - E51

E.C.O. NO.
00001
00002
00003

TITLE 8 LINE EIA ASYNCHRONOUS MUX

ASSY NO. D-UA-M7819-Ø-Ø

SHEET 1 OF 4

SIZE	CODE	NUMBER	REV.
B	PL	M7819-Ø-Ø	E

INSERTION PARTS LIST DATA BASE REV

DIGITAL EQUIPMENT CORPORATION
PARTS LIST

MADE BY R. KOPPENAL
DATE 3-1-76
ENG Robert V. A. Cormier
DATE 3-2-76

CHECKED Robert A. Cormier
DATE 3-2-76
PROD R. Wall
DATE 3-2-76

SECTION
ISSUED SECTION

NOTES:

ITEM NO.	DRAWING NO.	PART NO.	DESCRIPTION	QUANTITY/VARIATION	REF DESIGNATION
22.		1910951	IC, 9602	2	E78, E106
23.		1911116	IC, 8837	1	E70
24.		1911579	IC, 8641	4	E28, E29, E36, E37
25.		1912083	IC, 8647	2	E89, E90
26.		1912395	IC, 8136	3	E61, E71, E80
27.		1912799	IC, 74LS00	4	E23, E73, E76, E99
28.		1912801	IC, 74LS02	1	E108
29.		1912803	IC, 74LS04	5	E13, E14, E86, E101, E12
30.		1912805	IC, 74LS08	4	E63, E65, E87, E107
31.		1912807	IC, 74LS10	1	E97
32.		1912811	IC, 74LS21	1	E69
33.		1912816	IC, 74LS32	2	E100, E84
34.		1912824	IC, 74LS74	4	E77, E85, E88, E109
35.		1912830	IC, 74LS90	1	E66
36.		1912842	IC, 74LS138	2	E74, E75
37.		1912844	IC, 74LS151	2	E91, E92
38.		1912845	IC, 74LS153	8	E30 - E33, E38 - E41
39.		1912846	IC, 74LS155	3	E83, E94, E95
40.		1912847	IC, 74LS157	5	E19-22, E102
41.		1912853	IC, 74LS175	13	E15-18, E26, E27, E34, E35, E42, E43, E93, E98, E104

E.C.O. NO.

TITLE 8 LINE EIA ASYNCHRONOUS MUX

ASSY NO. D-UA-M7819-Ø-Ø
SHEET 2 OF 4

SIZE B | CODE PL | NUMBER M7819-Ø-Ø | REV. E

INSERTION PARTS LIST DATA BASE REV

DIGITAL EQUIPMENT CORPORATION
PARTS LIST

MADE BY R. KOPPENAL
DATE 3-1-76
CHECKED [illegible]
DATE 3-2-76
SECTION
ENG [illegible]
DATE 3-2-76
PROD R. Wall
DATE 3-2-76
ISSUED SECTION

NOTES:

ITEM NO.	DRAWING NO.	PART NO.	DESCRIPTION	QUANTITY/VARIATION	REF DESIGNATION
42.		1912860	IC, 74LS259	3	E62, E64, E103
43.		2111188	IC, 3341	4	E57-60
44.		2112623	IC, 5016	4	E53-56
45.		1912854	IC, 74LS193	2	E79, E105
46.		1300202	RES, 47 OHM, 1/4W, 5%	5	R1-5
47.		1300229	RES, 100 OHM, 1/4W, 5%	3	R13, R15, R67
48.		1300309	RES, 390 OHM, 1/4W, 5%	1	R30.
49.		1300365	RES, 1K, 1/4W, 5%	5	R11, R12, R14, R27, R61
50.		1300479	RES, 10K, 1/4W, 5%	17	R16-25, R31-36, R62
51.		1300510	RES, 33K, 1/4W, 10%	24	R37-60
52.		1301322	RES, 180 OHM, 1/4W, 5%	4	R28, R29, R63, R26
53.		1301874	RES, 5.6K, 1/4W, 5%	2	R64, R65
54.		1302177	RES, 47K, 1/4W 5%	1	R66
55.		1209838	PRIORITY SOCKET 16 PIN	1	E52
56.		1209941-03	LEFT LATCH FOR BERG PC SOCKET HOUSING	1	
57.		1209941-04	RIGHT LATCH FOR BERG PC SOCKET HOUSING	1	
58.		1209941-07	50 PIN BERG PC SOCKET HOUSING	1	J1
59.		1210711-02	HANDLE ASSLY	1	
60.		1211164-04	SWITCH, 8 POSITION	1	E11
61.		1211164-06	SWITCH, 10 POSITION	1	E81

E.C.O. NO.

TITLE: 8 LINE EIA ASYNCHRONOUS MUX

ASSY NO. D-UA-M7819-Ø-Ø
SHEET 3 OF 4
SIZE B | CODE PL | NUMBER M7819-Ø-Ø | REV. E
INSERTION PARTS LIST DATA BASE REV

DIGITAL EQUIPMENT CORPORATION
PARTS LIST

MADE BY R. Koppenal
DATE 3-1-76
ENG [illegible]
DATE 3-2-76

CHECKED [illegible]
DATE 3-2-76
PROD R. Wall
DATE 3-2-76

SECTION
ISSUED SECTION

NOTES:

ITEM NO.	DRAWING NO.	PART NO.	DESCRIPTION	QUANTITY/VARIATION	REF DESIGNATION
62		5408778	PRIORITY 5 INSERT	1	PLUG INTO E52
63		9006735	SPLIT LUG	2	
64		9006732	EYELETS	12	
65		9009185	JUMPER, INSULATED	1	W1
66		1811660-02	OSCILLATOR, 5.068 MHZ	1	E67

E.C.O. NO.

TITLE 8 LINE EIA ASYNCHRONOUS MUX

ASSY NO. D-UA-M7819-Ø-Ø
SHEET 4 OF 4

SIZE B | CODE PL | NUMBER M7819-Ø-Ø | REV. E

INSERTION PARTS LIST DATA BASE REV

COMPONENT SIDE VIEW

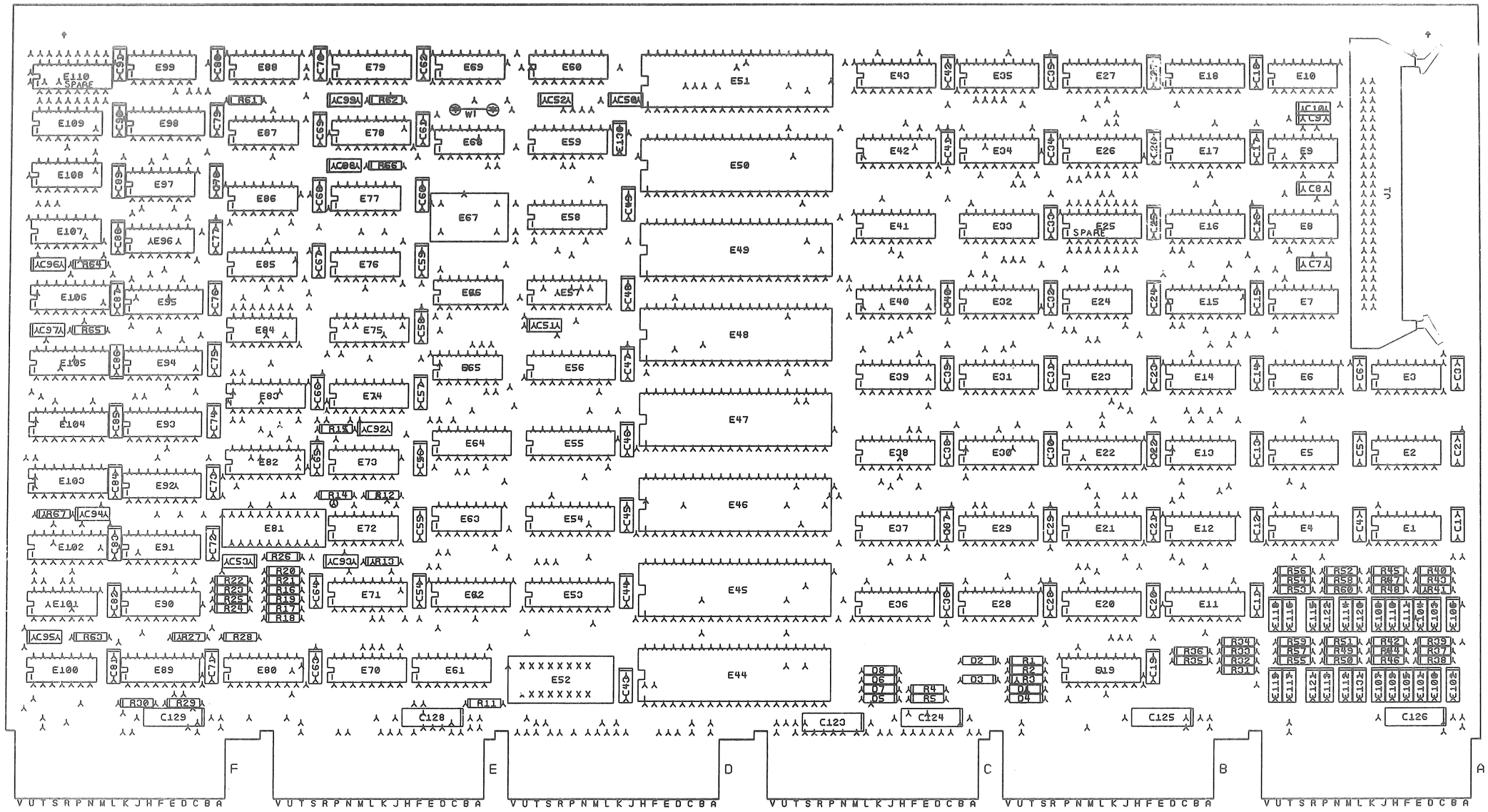

NOTES:

CHK	CHANGE NO	REV

ETCH REV. D
P.C. DESIGN DATA BASE REV. D

SIGNATURES	DATE
DRN.	
CHK'D.	
ENG.	10-27-76
PROJ.ENG.	10-27-76
PROD.	
SCALE	
SHT. 1 OF 3	

digital

TITLE [illegible]

SIZE	CODE	NUMBER	REV
D	UA	[illegible]	E

NEXT HIGHER ASSY. [illegible]

MS#

LAYER 1

M7819 5011820D-P3

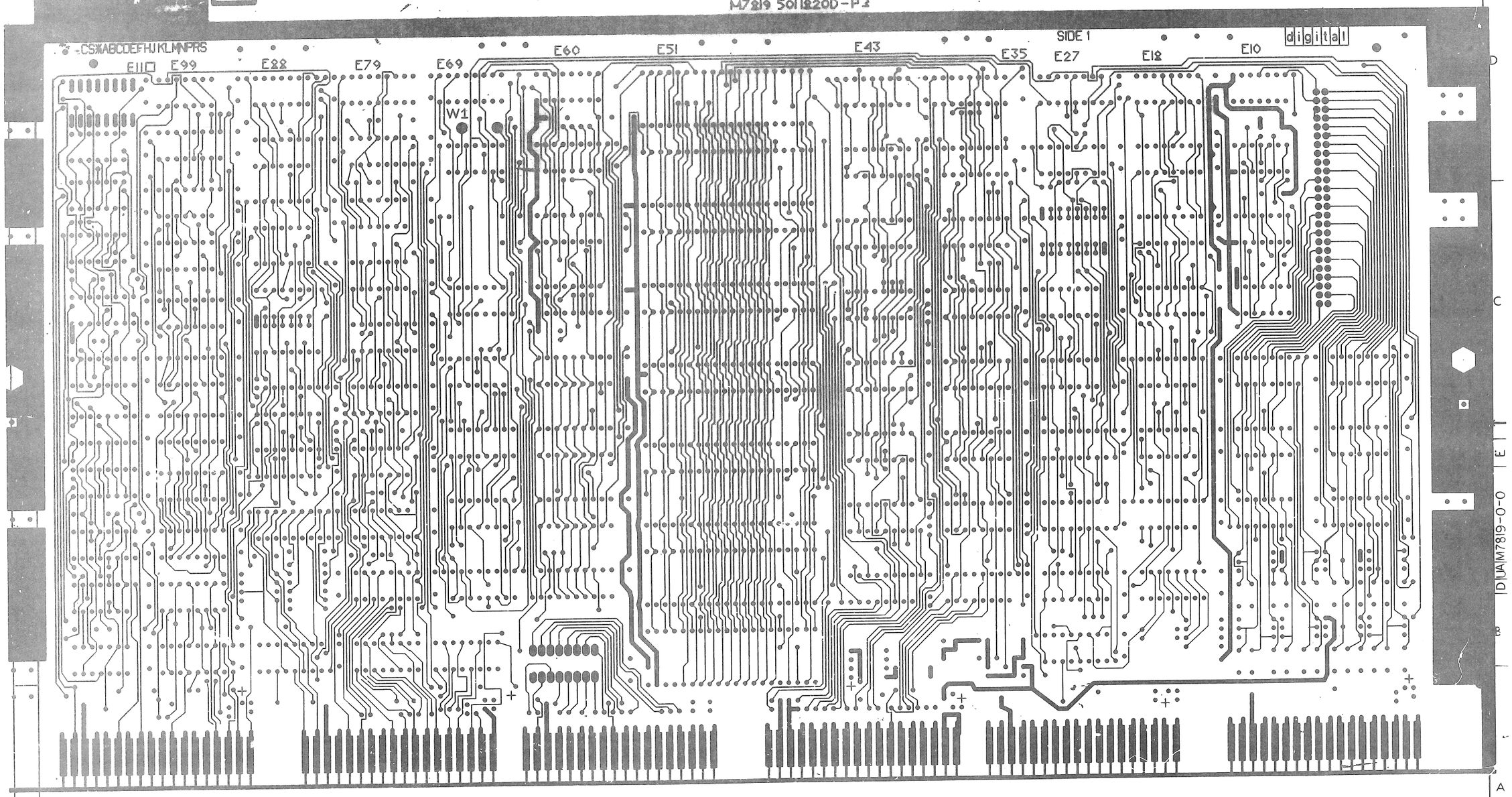

REVISIONS		
CHK	CHANGE NO	REV

TITLE: 8LINE EIA ASYNCHRONOUS MUX

SIZE D | CODE UA | NUMBER M7819-0-0 | REV E

SCALE | SHEET 2 OF 3 | DIST

DUAM7819-0-0

LAYER 4
L4
M7819 5011220D-P3
SIDE 2
8 LINE EIA ASYNCHRONOUS MUX
DUA M7819-0-0
E
REVISIONS
CHK
CHANGE NO
REV
8LINE EIA ASYNCHRONOUS MUX
SHEET 3 OF 3
D UA M7819-0-0
E

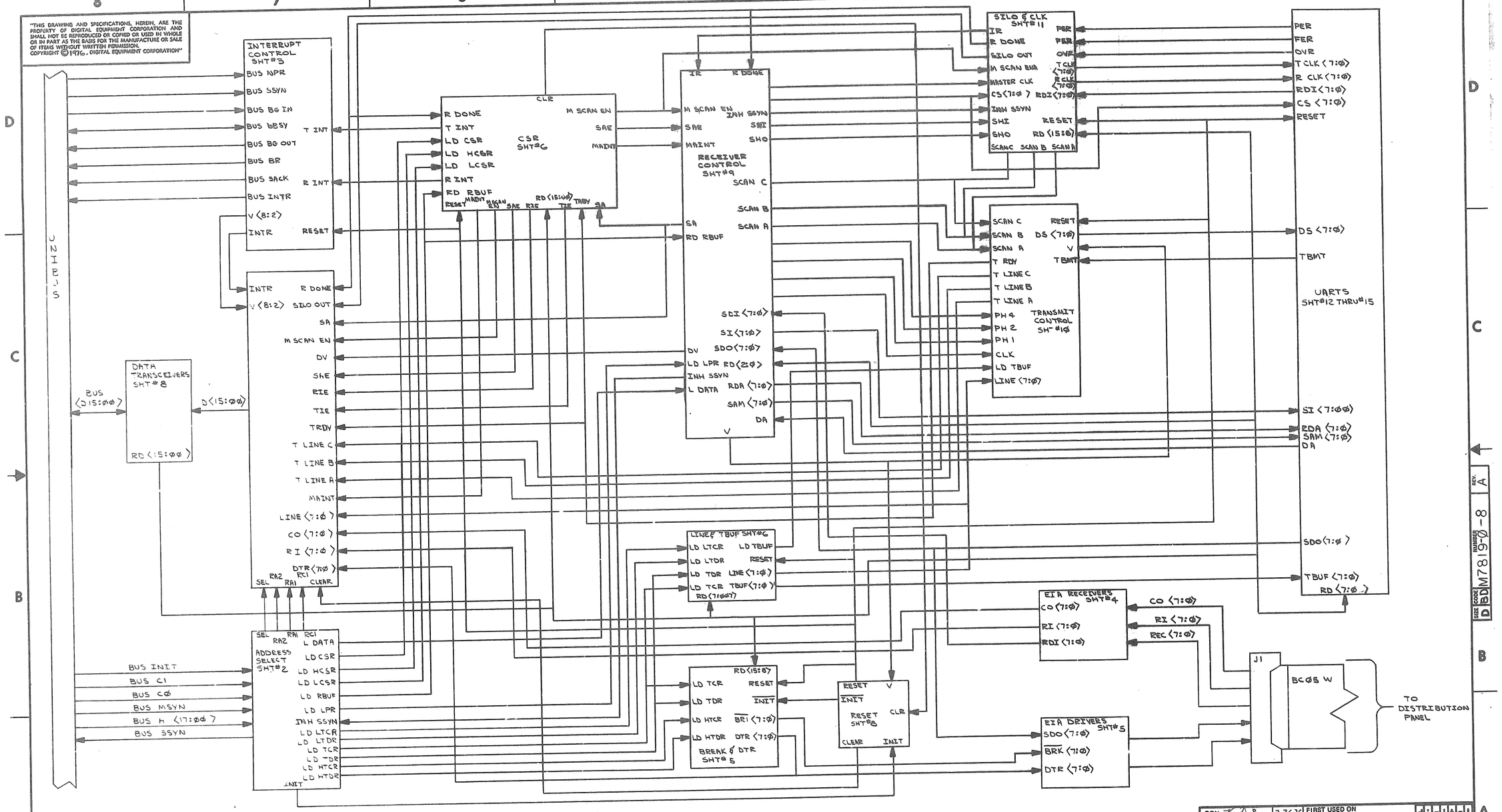

DRN.		2-26-76
CHK'D		3-2-76
ENG.		3-2-76
PROJ.		3-2-76
PROD.		3-2-76
NEXT HIGHER ASSY.	D-UA-M7819-Ø-Ø	
SCALE	—/—	
SHEET	1 OF 1	

FIRST USED ON: DZ11-A

digital

TITLE: M7819 BLOCK DIAGRAM

SIZE	CODE	NUMBER	REV.
D	BD	M7819-Ø-8	A

DIST.

REVISIONS: REV. / CHANGE NO. / CHK

DEC FORM NO. DRD 102-D

POWER & GROUND TABLE

IC TYPE	GND	+5V	+12V	-12V	V+	V-
UART (1602)	PIN 3	PIN 1	—	PIN 2	—	—
DEC 8016	PIN 11	PIN 2	PIN 9	—	—	—
DEC 3341	PIN 8	PIN 16	—	PIN 1	—	—
DEC 1488	PIN 7	—	—	—	PIN 14	PIN 1
14 PIN IC'S	PIN 7	PIN 14	—	—	—	—
16 PIN IC'S	PIN 8	PIN 16	—	—	—	—
DEC. 74LS90	PIN 10	PIN 5	—	—	—	—

AA2, BA2, DA2, EA2, FA2

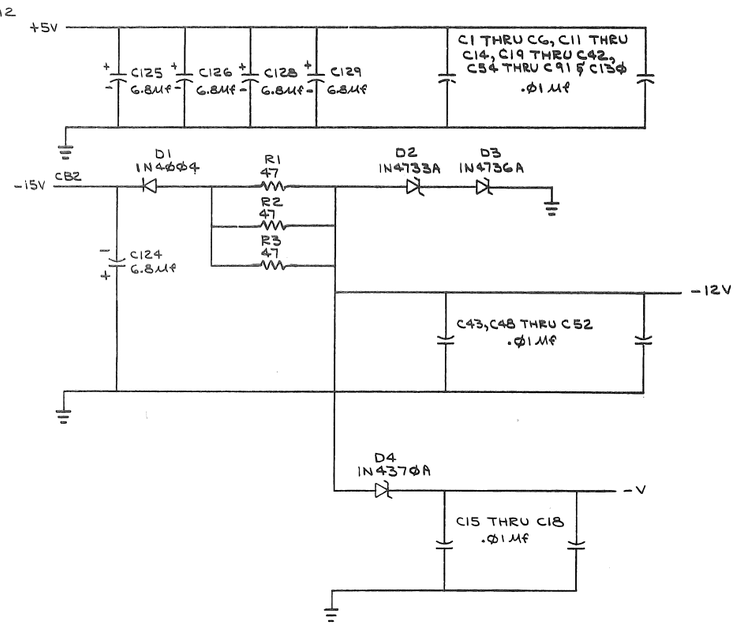

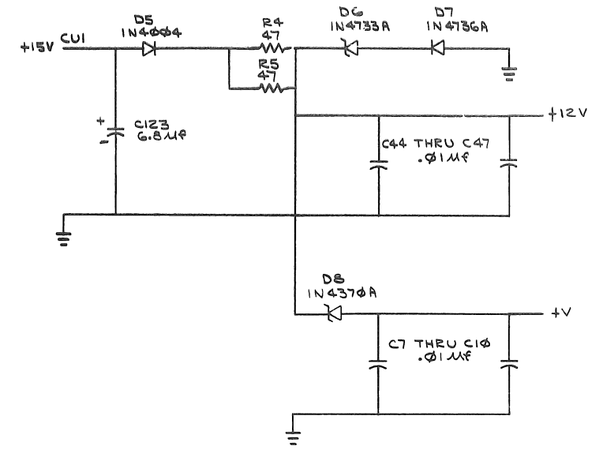

(POWER AND GROUND)

DRN. R. Davis	2-11-76	FIRST USED ON M7819
CHK'D	3-2-76	TITLE 8 LINE EIA ASYNCHRONOUS MUX
ENG.	3-2-76	
PROJ. ENG.	3-2-76	
PROD. R. Wall	3-2-76	
NEXT HIGHER ASSY. D-UA-M7819-0-0		
SCALE —		SIZE D CODE CS NUMBER M7819-0-1 REV. E
SHEET 1 OF 15		DIST.

digital

(S1)

REVISIONS			
CHK.	CHANGE NO.	REV.	
	M7819-00001	C	
		D	
		E	

DEC FORM NO.

SIZE D CODE CS NUMBER M7819-0-1 REV. E

NOTES:

1. THE "B" AND "D" INPUTS SHOWN ON THE 8136 LOGIC SYMBOL HAS THE FOLLOWING MEANING:
   B= UNIBUS RECEIVER INPUT.
   D= NORMAL TTL LOGIC INPUT.
2. THE 8136 CONTAINS SIX VOLTAGE COMPARATORS WITH A COMMON OUTPUT. EACH COMPARATOR MUST HAVE ITS "B" AND "D" INPUTS THE SAME, AT THE SAME TIME, FOR A TRUE (HIGH) OUTPUT.
3. WHEN A SWITCH IS CLOSED (ON), THE COMPARATOR RECOGNIZES THE RESPECTIVE UNIBUS ADDRESS BIT WHEN IT IS A LOGICAL ONE (LOW). WHEN A SWITCH IS OPEN (OFF) THE COMPARATOR RECOGNIZES THE RESPECTIVE UNIBUS ADDRESS BIT WHEN IT IS A LOGICAL ZERO (HIGH).

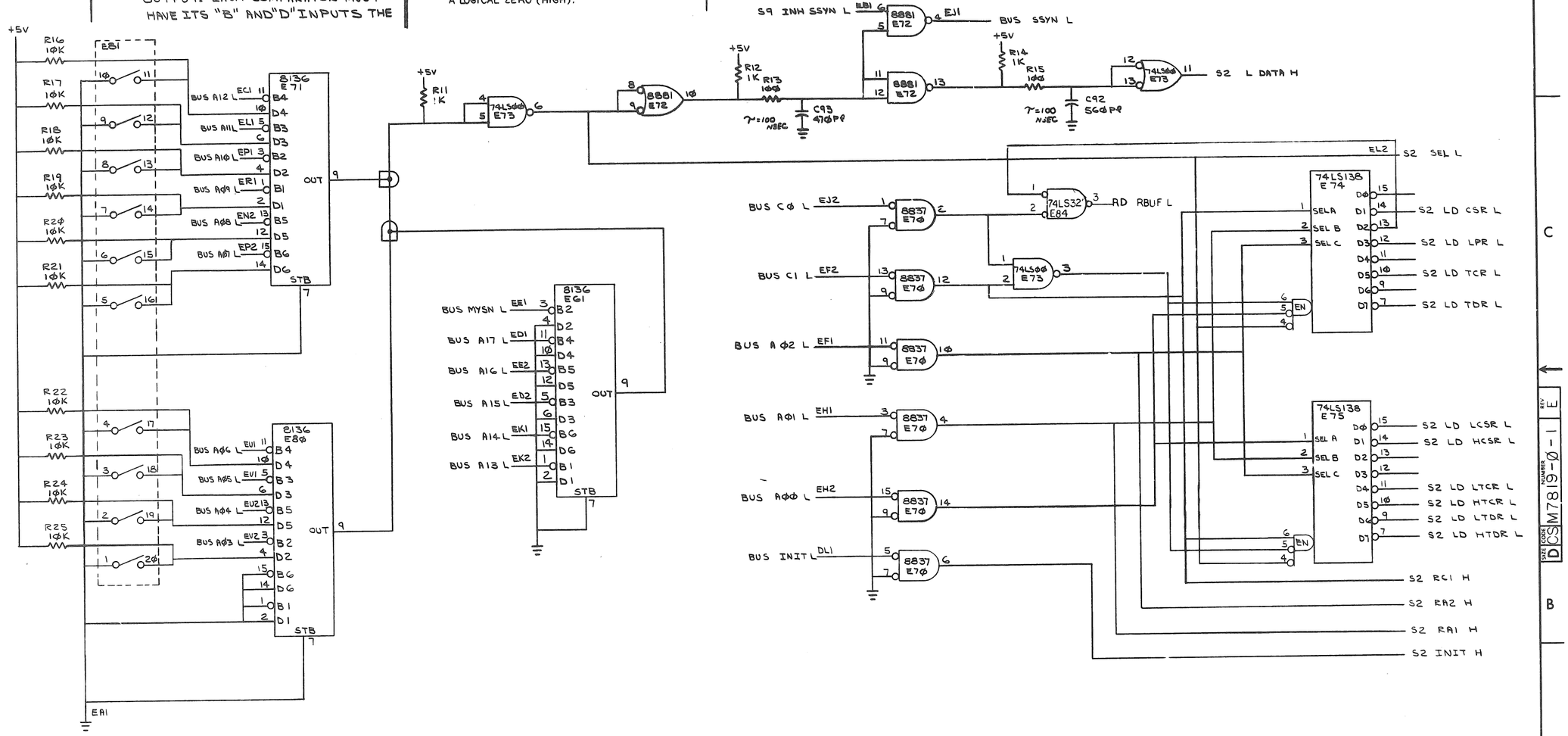

REVISIONS		
CHK	CHANGE NO.	REV.

(ADDRESS SELECT)

TITLE 8 LINE EIA ASYNCHRONOUS MUX (S2)

SIZE D | CODE CS | NUMBER M7819-0-1 | REV. E

SCALE — | SHEET 2 OF 15 | DIST.

DEC FORM NO. DRD 138

* WHEN A SWITCH IS OPEN (OFF), THE RESPECTIVE VECTOR IS Ø "ONE".
WHEN A SWITCH IS CLOSED (ON), THE RESPECTIVE VECTOR BIT IS Ø "ZERO".

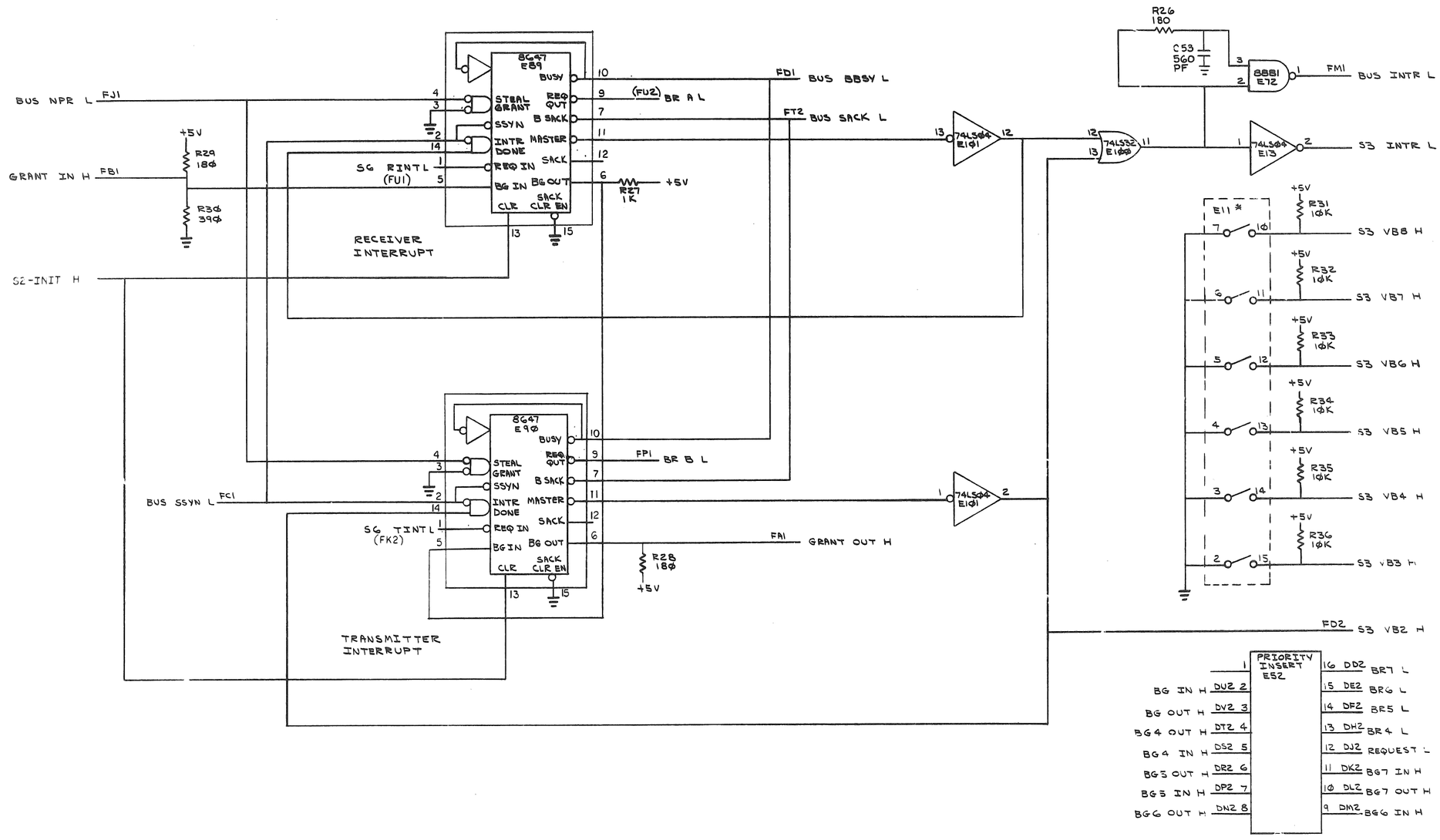

(INTERRUPT CONTROL)

REVISIONS		
CHK	CHANGE NO	REV

TITLE: 8 LINE EIA ASYNCHRONOUS MUX (S3)

SIZE D | CODE CS | NUMBER M7819-Ø-1 | REV. E

SCALE — | SHEET 3 OF 15 | DIST.

DEC FORM NO. DRD 138

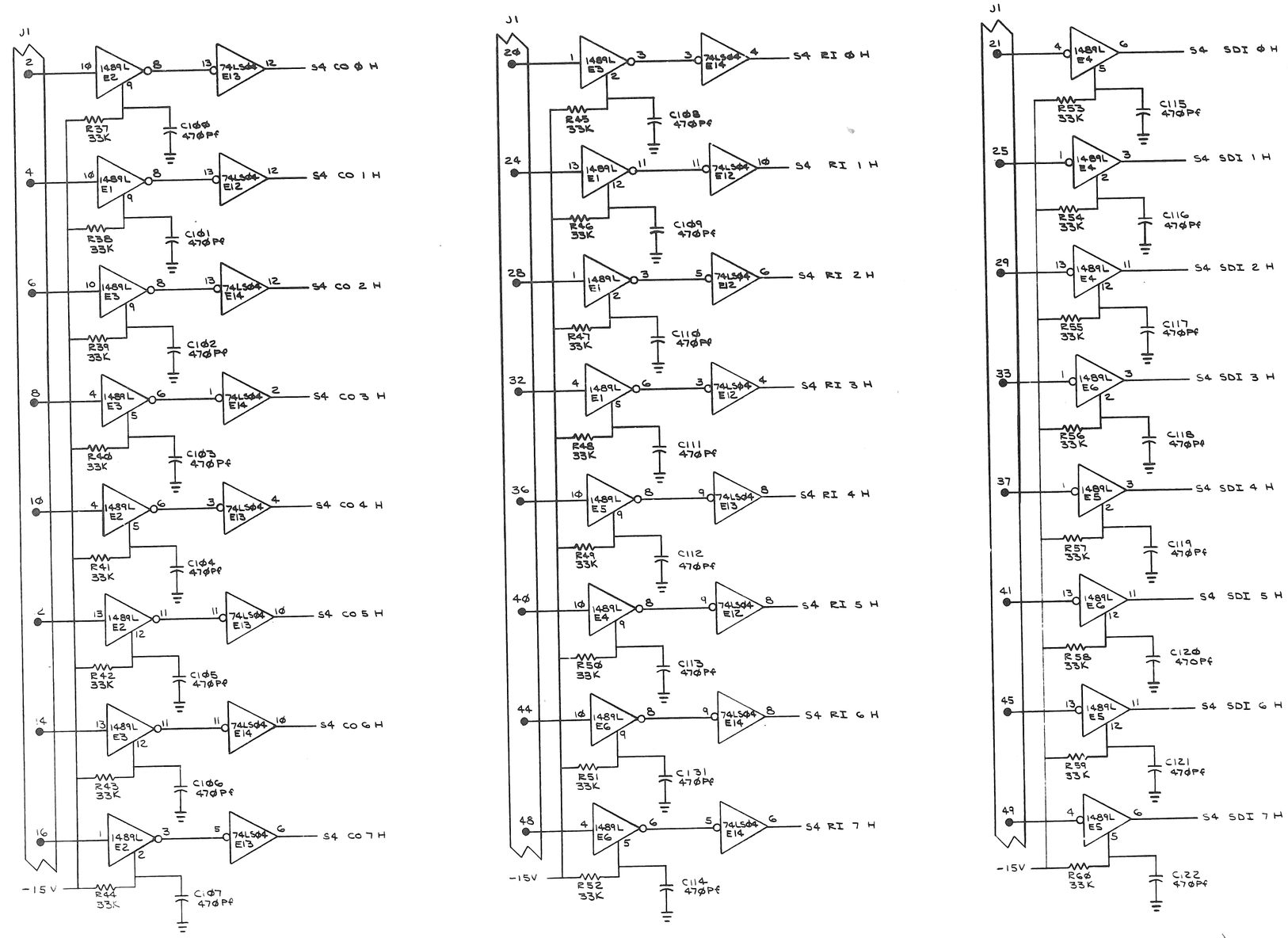

(EIA RECEIVERS)

REVISIONS		
CHK	CHANGE NO.	REV

TITLE	SIZE	CODE	NUMBER	REV.
LINL EIA ASYNCHRONOUS MUX (S4)	D	CS	M7819-Ø-1	E
SCALE — / —	SHEET 4 OF 15	DIST.		

DEC FORM NO. DRD 138

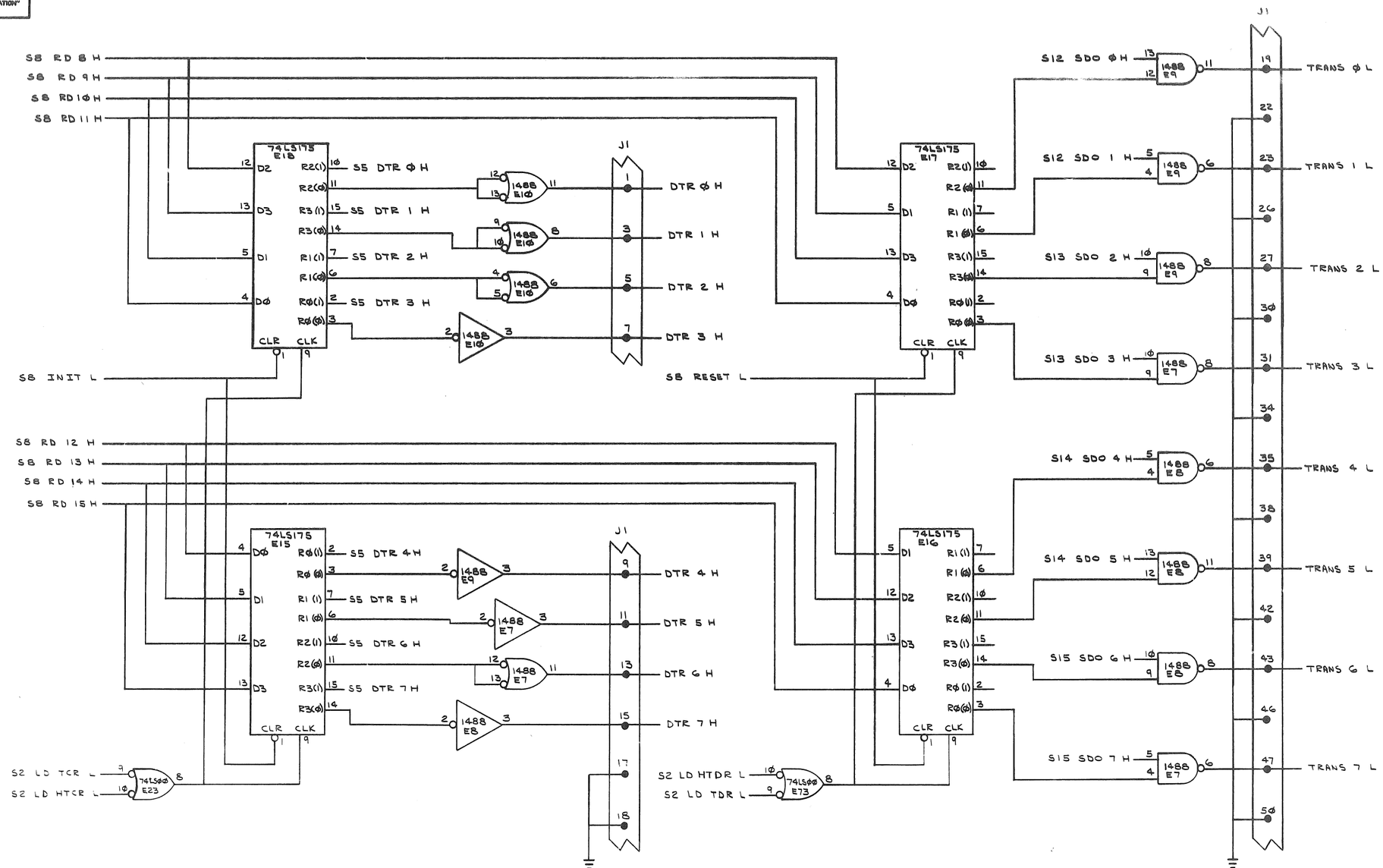

REVISIONS		
CHK	CHANGE NO.	REV.

(UTP & BRK & EIA TRANSMITTER)

TITLE: 2 LINE EIA ASYNCHRONOUS MUX (65)

SIZE D | CODE CS | NUMBER M7819-0-1 | REV. E

SCALE — | SHEET 5 OF 15 | DIST.

DEC FORM NO. DRD 138

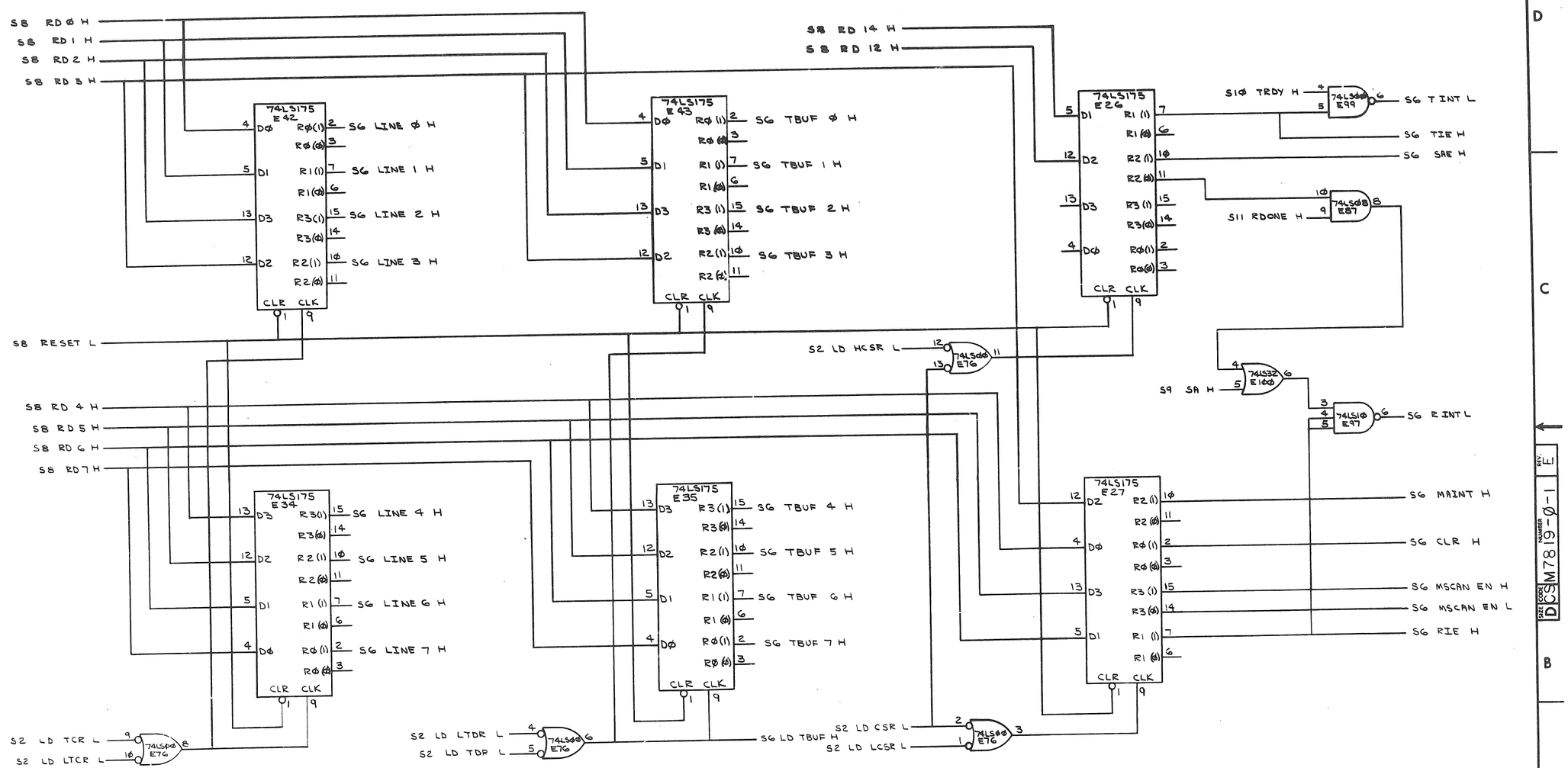

REVISIONS		
CHK	CHANGE NO.	REV.

TITLE 8 LINE EIA ASYNCHRONOUS MUX (SG) (REGISTERS)

SIZE D CODE CS NUMBER M7819-0-1 REV. E

SCALE — SHEET 6 OF 15 DIST.

DEC FORM NO. DRD 138

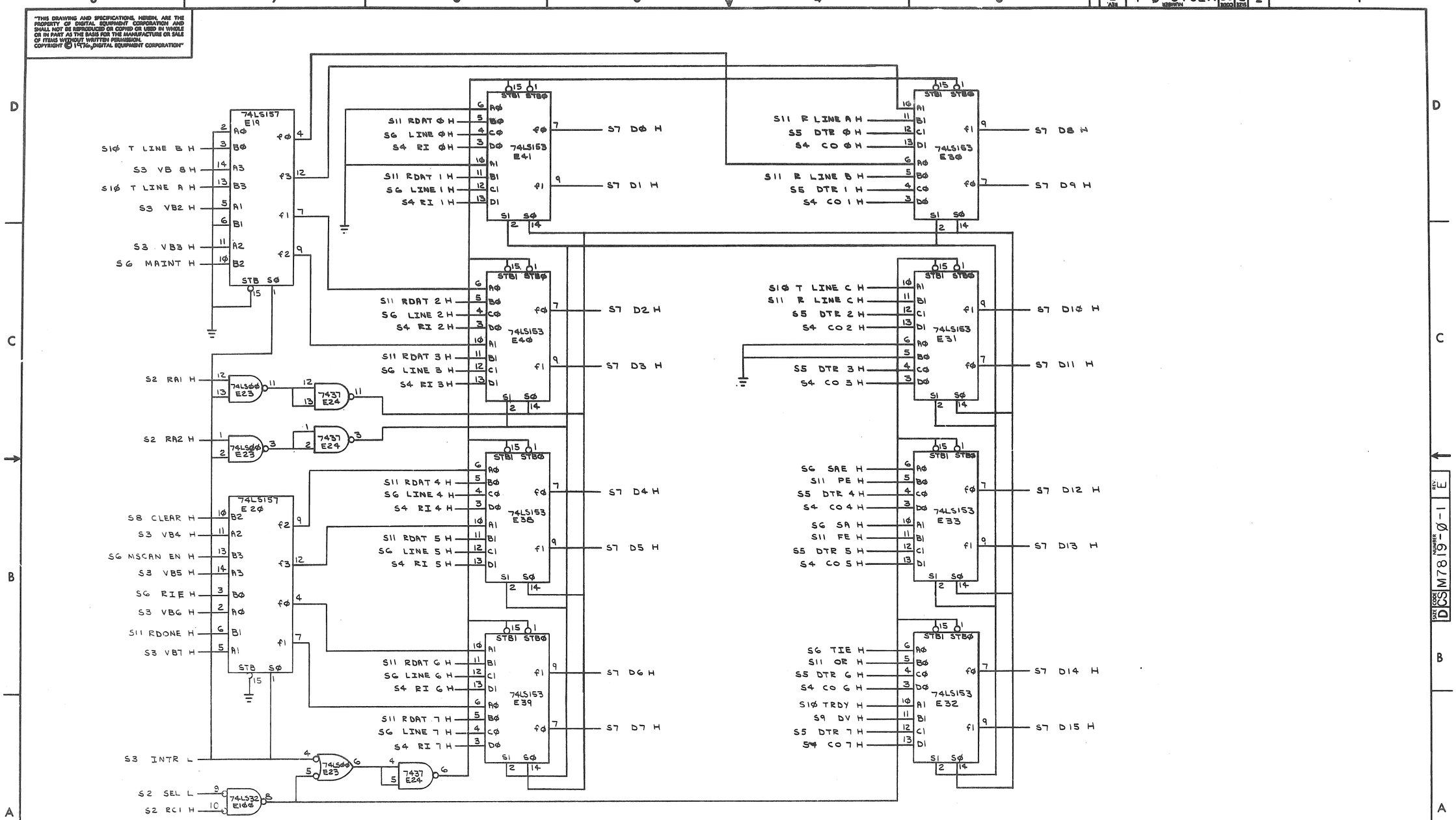

REVISIONS		
CHK	CHANGE NO.	REV.

(OUTPUT DATA MULTIPLEXER)

TITLE	SIZE	CODE	NUMBER	REV.
8 LINE EIA ASYNCHRONOUS MUX (S7)	D	CS	M7819-0-1	E
SCALE — / —	SHEET 7 OF 15	DIST.		

DEC FORM NO. DRD 138

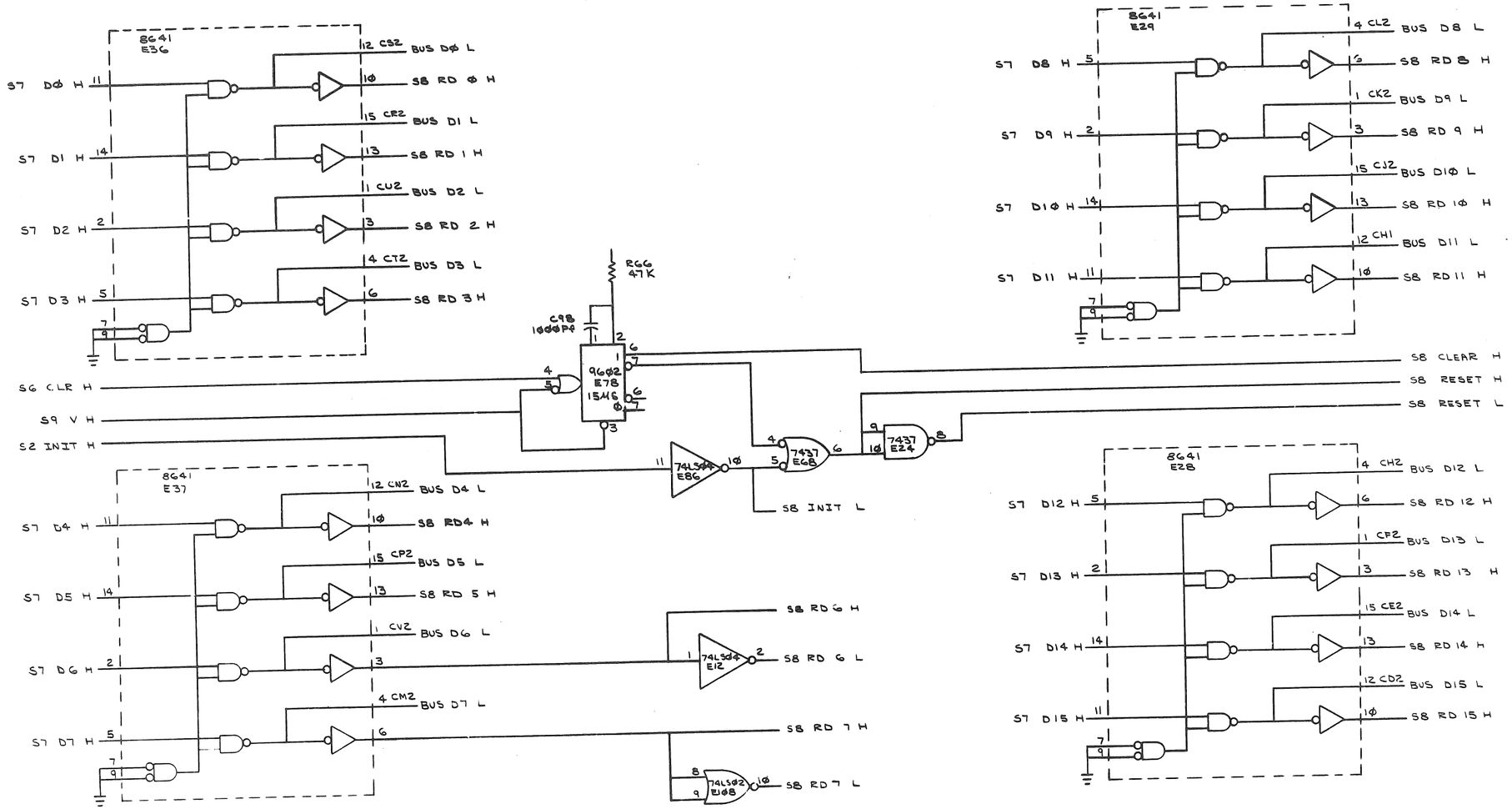

(UNIBUS TRANSCEIVERS AND RESET)

REVISIONS		
CHK	CHANGE NO.	REV.

TITLE 8 LINE EIA ASYNCHRONOUS MUX (SB)

SIZE D | CODE CS | NUMBER M7819-0-1 | REV. E

SCALE — | SHEET 8 OF 15 | DIST.

DEC FORM NO. DRD 138

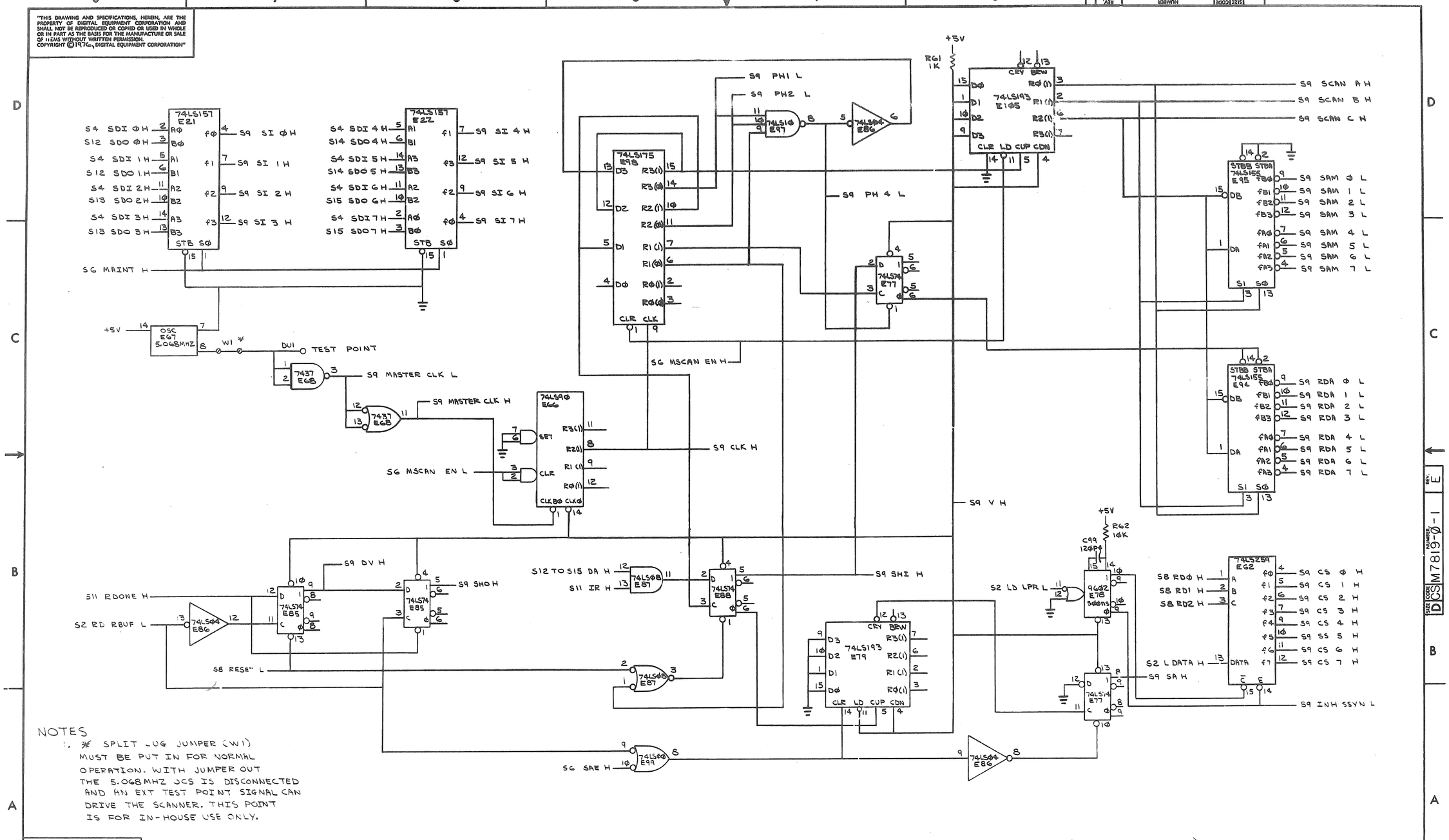

NOTES

1. * SPLIT LUG JUMPER (W1) MUST BE PUT IN FOR NORMAL OPERATION. WITH JUMPER OUT THE 5.068MHZ OCS IS DISCONNECTED AND AN EXT TEST POINT SIGNAL CAN DRIVE THE SCANNER. THIS POINT IS FOR IN-HOUSE USE ONLY.

REVISIONS		
CHK	CHANGE NO.	REV.

(RECEIVER CONTROL)

TITLE	SIZE	CODE	NUMBER	REV.
8 LINE EIA ASYNCHRONOUS MUX (S9)	D	CS	M7819-Ø-1	E

SCALE — SHEET 9 OF 15 DIST.

DEC FORM NO. DRO 138

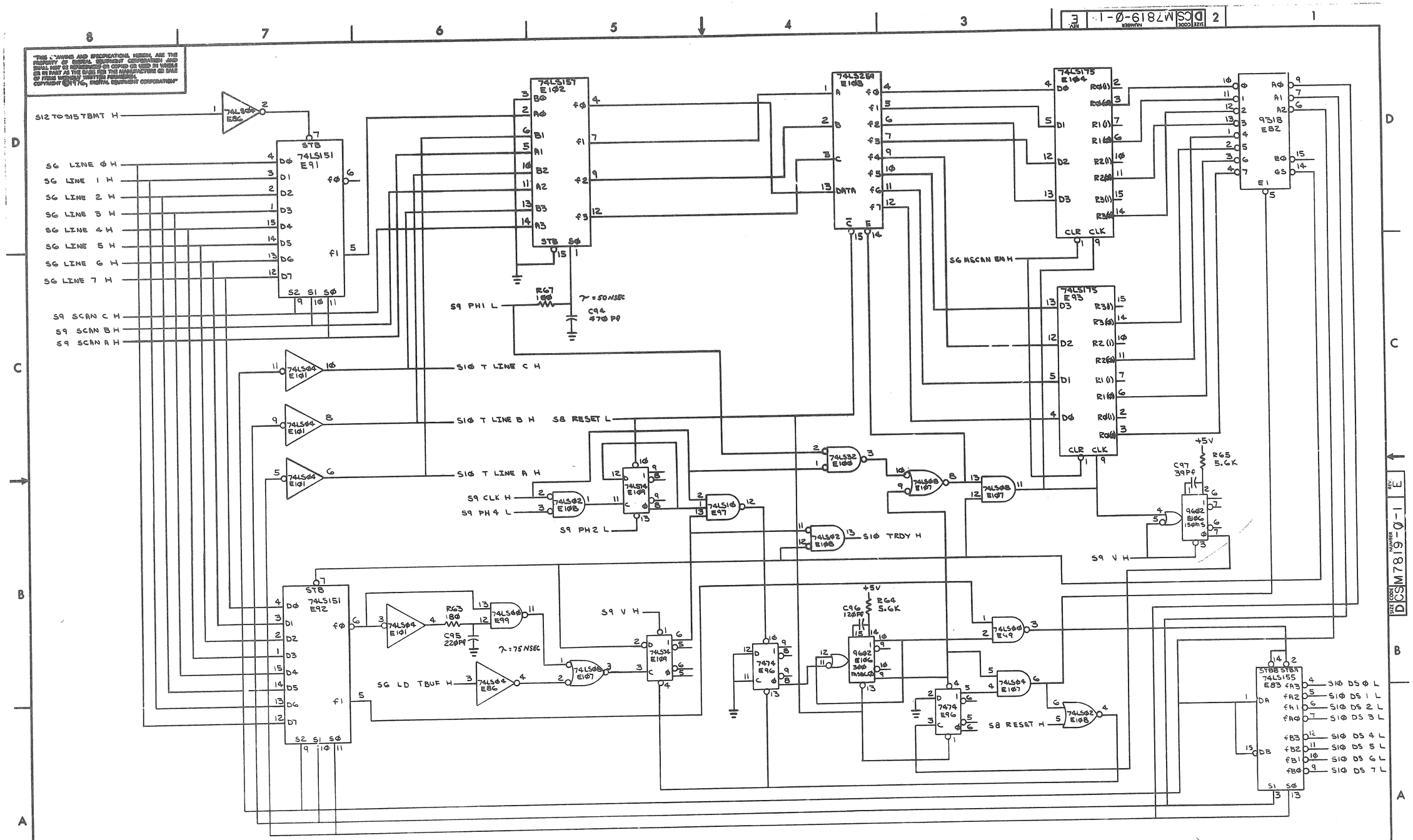

REVISIONS		
CHK	CHANGE NO.	REV.

(TRANSMITTER CONTROL)

TITLE: 8 LINE EIA ASYNCHRONOUS MUX (S10)

SIZE: D | CODE: CS | NUMBER: M7819-Ø-1 | REV. E

SCALE: — / — | SHEET 10 OF 15 | DIST.

DEC FORM NO. DRD 138

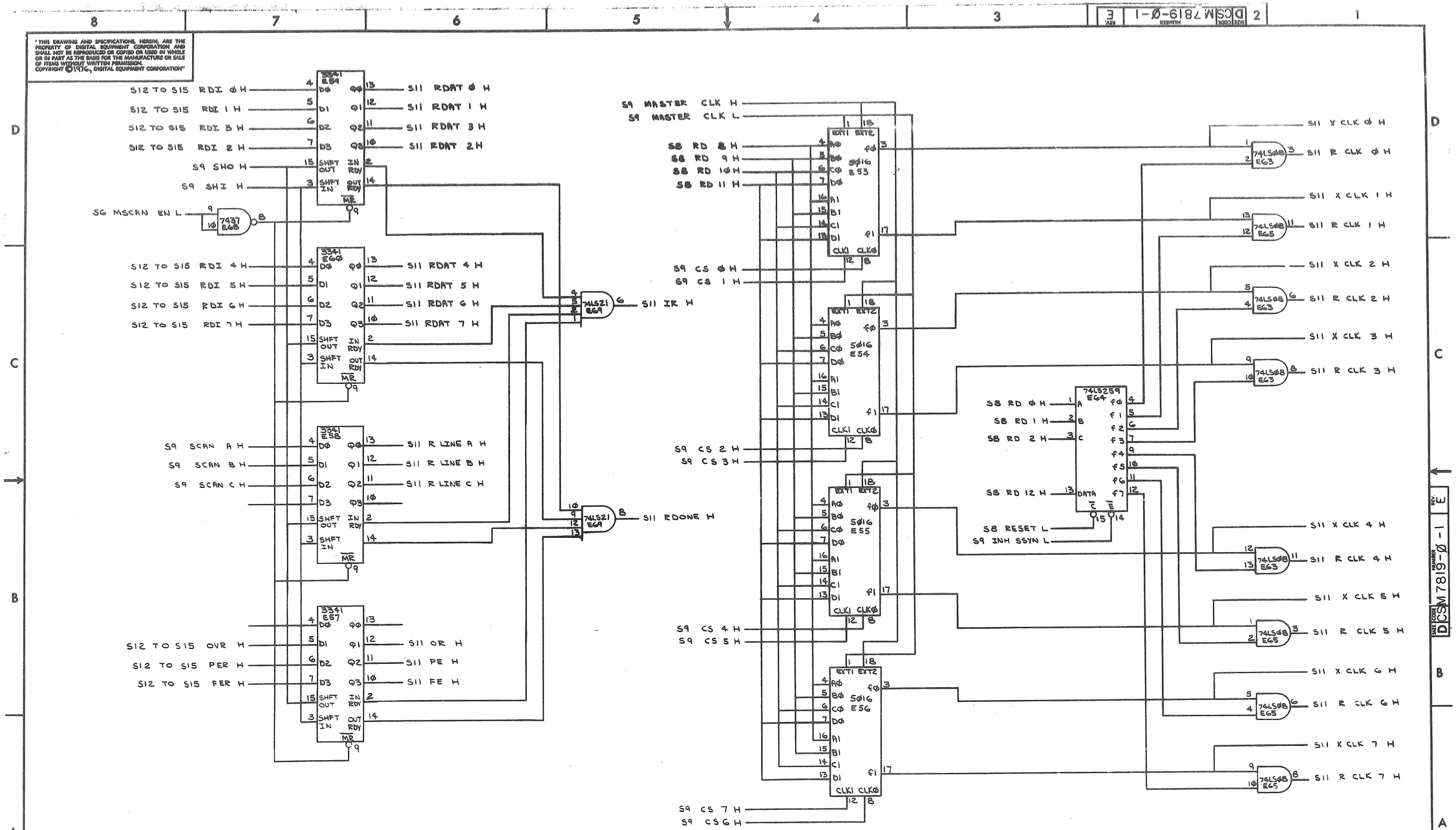

REVISIONS		
CHK	CHANGE NO	REV

(SILO AND UART CLOCKS)

TITLE	SIZE	CODE	NUMBER	REV.
8 LINE EIA ASYNCHRONOUS MUX (S11)	D	CS	M7819-Ø-1	E
SCALE — / —	SHEET 11 OF 15	DIST.		

DEC FORM NO. DRD 138

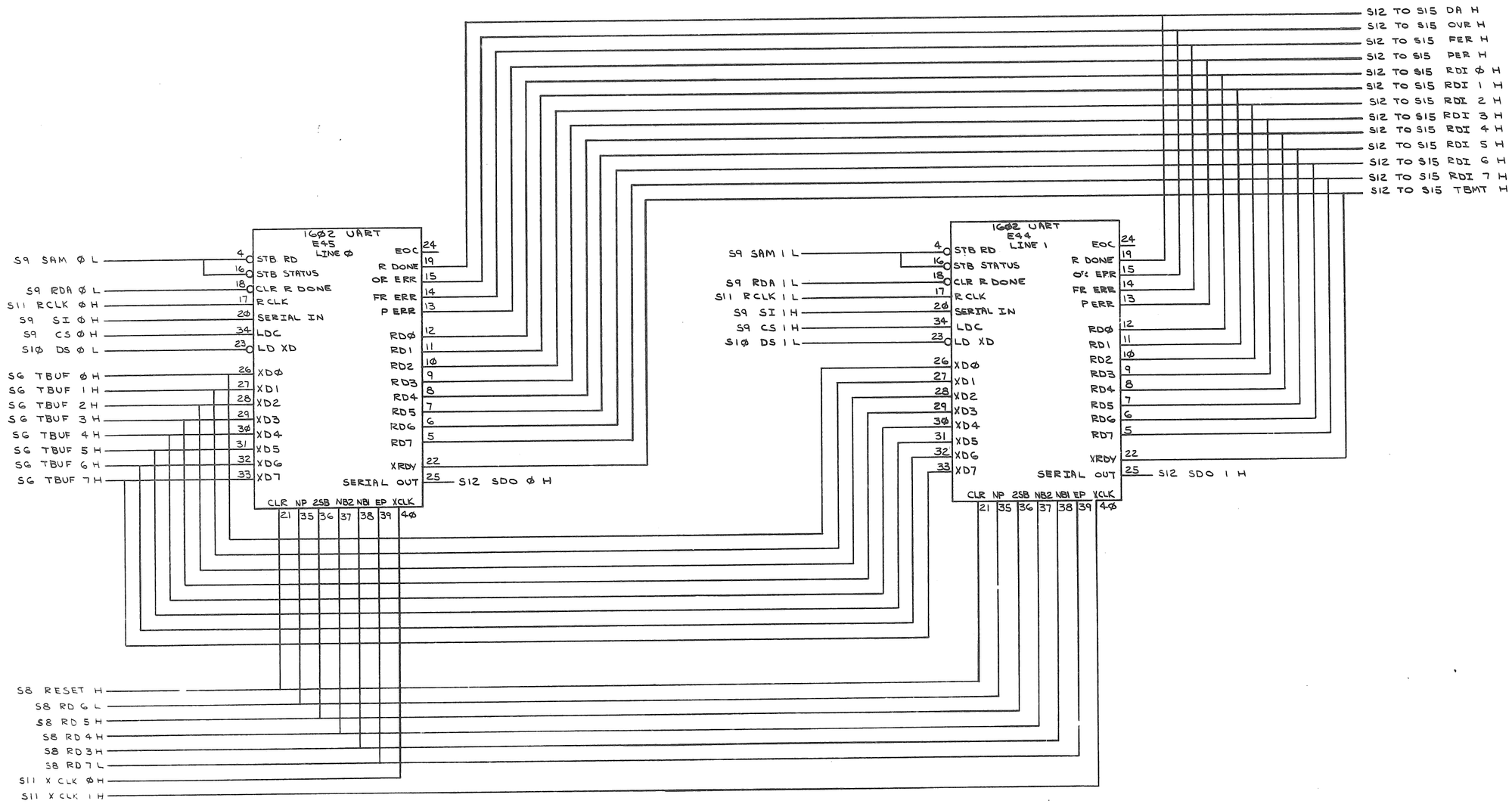

(TRANSCEIVER LINES Ø & 1)

REVISIONS		
CHK	CHANGE NO.	REV.

TITLE: 8 LINE EIA ASYNCHRONOUS MUX (S12)

SIZE D | CODE CS | NUMBER M7819-Ø-1 | REV. E

SCALE — | SHEET 12 OF 15 | DIST.

DEC FORM NO. DRD 138

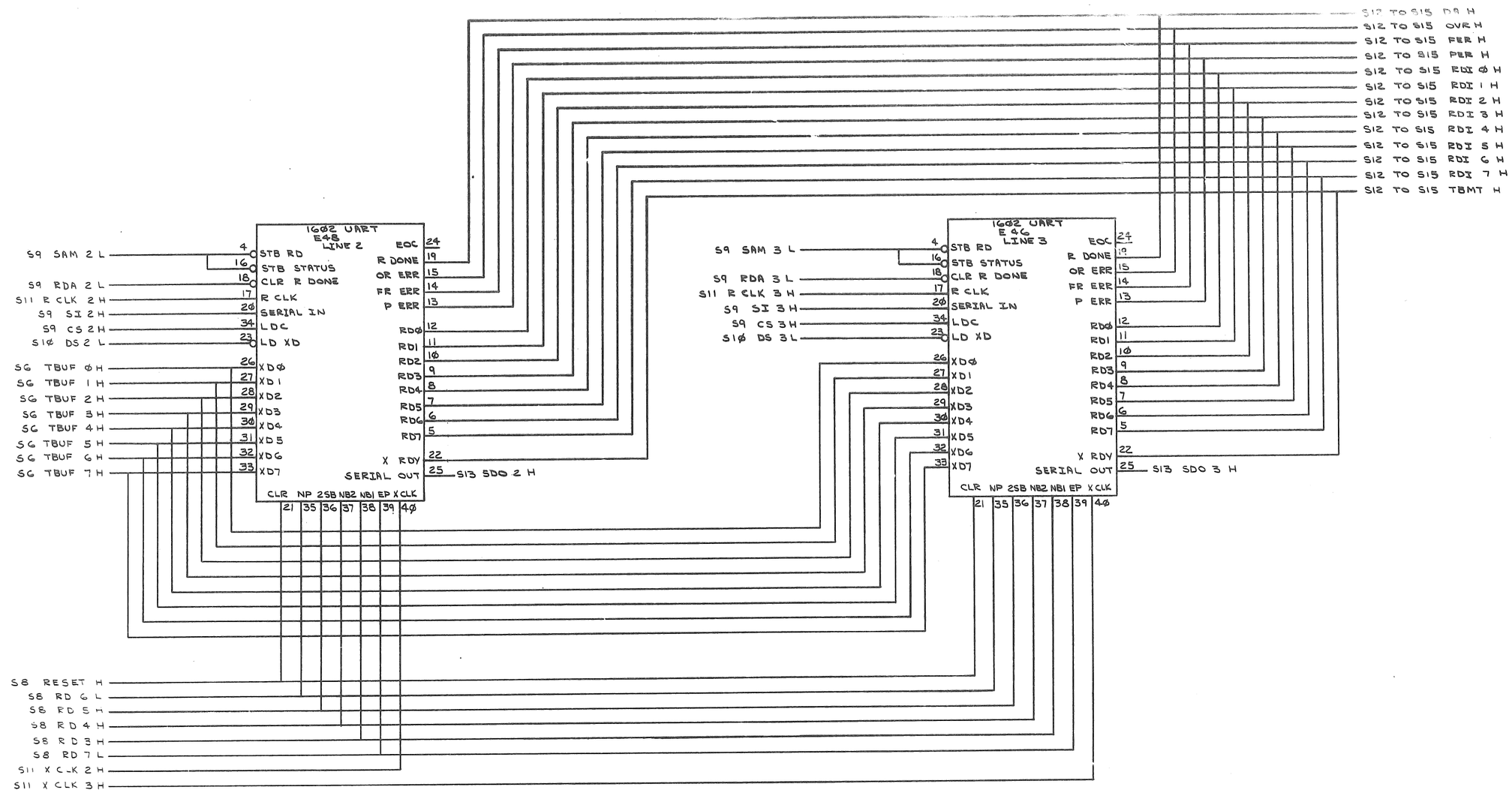

(TRANSCEIVER LINES 2 & 3)

REVISIONS		
CHK	CHANGE NO.	REV.

TITLE	SIZE	CODE	NUMBER	REV.
2 LINE EIA ASYNCHRONOUS MUX (S13)	D	CS	M7819-0-1	E

SCALE — / — SHEET 13 OF 15 DIST.

DEC FORM NO. ORD 138

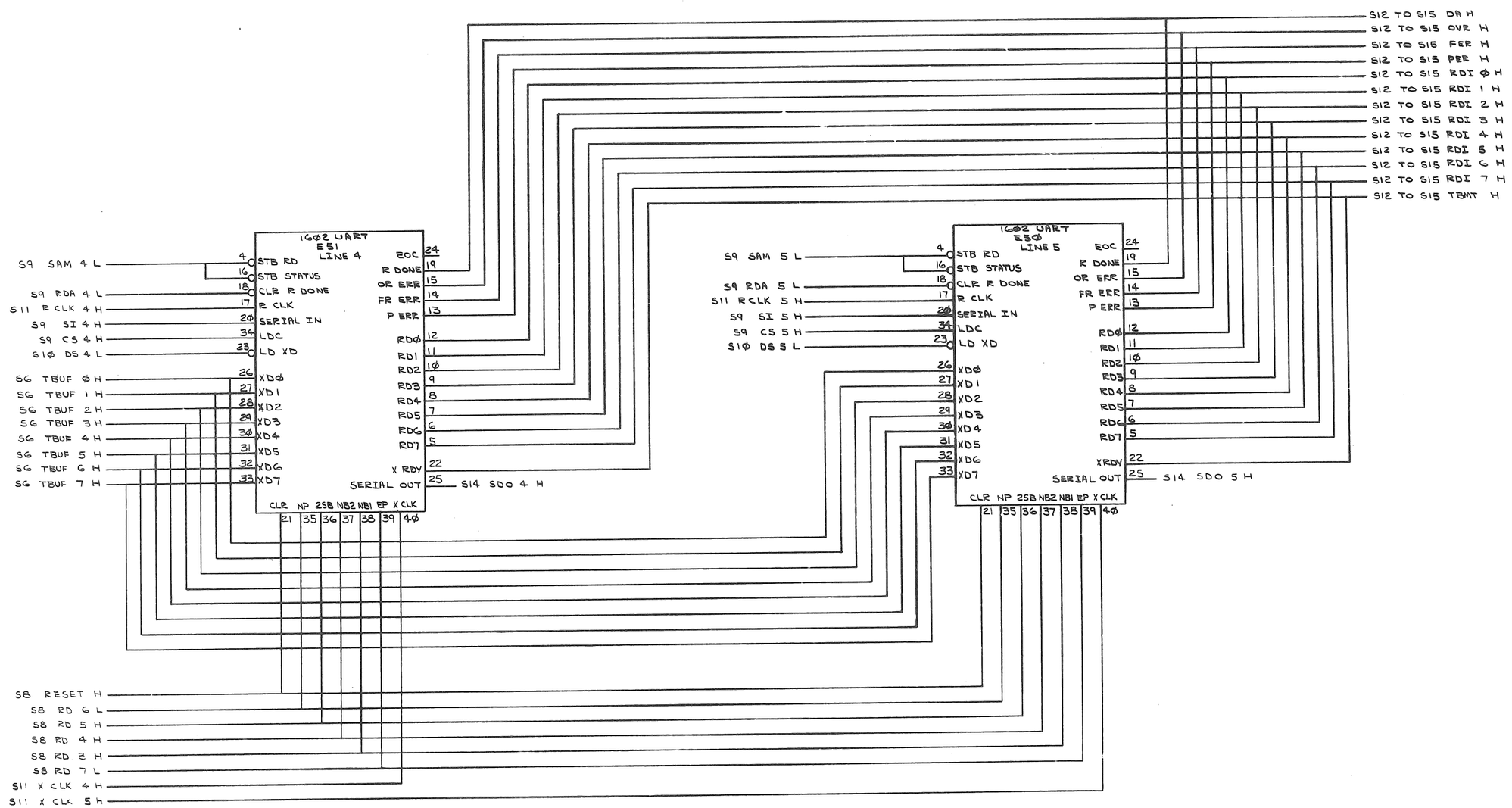

REVISIONS		
CHK	CHANGE NO.	REV.

TRANSCEIVER LINES 4 & 5

TITLE	SIZE	CODE	NUMBER	REV.
8 LINE EIA ASYNCHRONOUS MUX (S14)	D	CS	M7819-0-1	E
SCALE — / — / —	SHEET 14 OF 15	DIST.		

DEC FORM NO. DRD 138

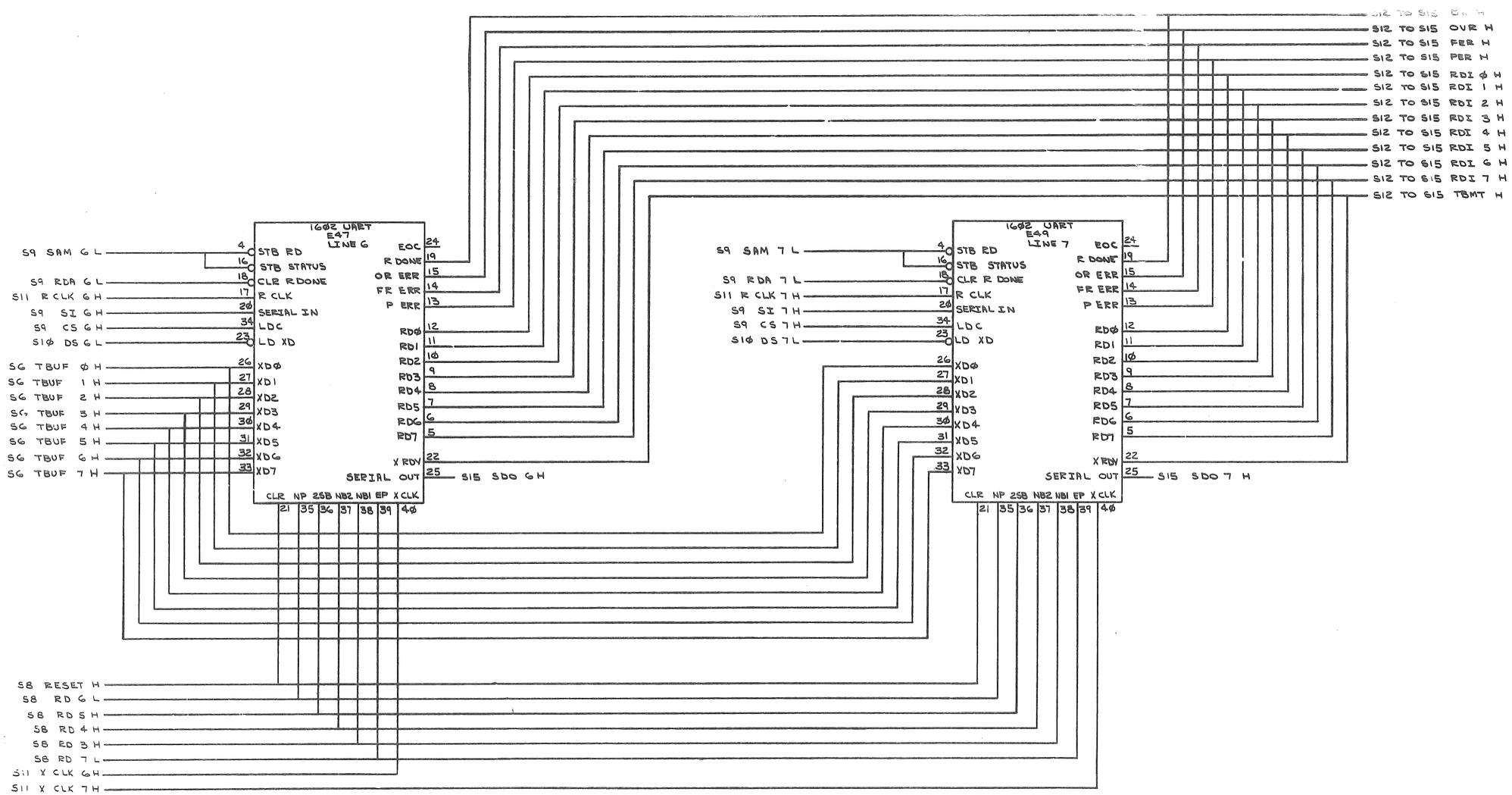

REVISIONS		
CHK	CHANGE NO.	REV.

TRANSCEIVER LINES 6 & 7

TITLE	SIZE	CODE	NUMBER	REV.
8 LINE EIA ASYNCHRONOUS MUX (S15)	D	CS	M7819-0-1	E

SCALE — SHEET 15 OF 15 DIST.

DEC FORM NO. DPU 138

SIZE D CODE CS NUMBER M7819-0-1 REV. E

digital EQUIPMENT CORPORATION
MAYNARD, MASSACHUSETTS

DRAWING DIRECTORY

CUSTOMER PRINT SET INDEX

THIS IS PRINT SET

	SEQUENCE
DRAWING DIRECTORY	B-DD-H317-0
H317 CABLE BOX ASSY	E-UA-H317-0-0
DJ-11 DIST. PANEL (EIA) CIRCUIT SCHEMATIC	D-CS-5410260-0-1
DJ-11 DIST. PANEL (TTY) CIRCUIT SCHEMATIC	D-CS-5410262-0-1
DV11 DIST. PANEL CIRCUIT SCHEMATIC	D-CS-5411153-0-1
DZ11 DIST PANEL (EIA)	D-CS-5411928-0-1
DZ11 DIST PANEL (TTY)	D-CS-5411974-0-1

	SEQUENCE
MFG PRINT SET	
PACKAGING INSTRUCTION	A-PI-3700091-0-0

UNIT VARIATIONS

VARIATION	TITLE	PRINT SET TYPE T-
H317-A	H317 CABLE BOX ASSY.	X
H317-B	H317 CABLE BOX ASSY.	X
H317-C	H317 CABLE BOX ASSY	X
H317-E	H317 CABLE BOX ASSY (EIA)	X
H317-F	H317 CABLE BOX ASSY (TTY)	X

REVISIONS

DATE	CHG. NO.	REV
3-74	H317-3	A
2-75	H317-4	E
11-75	H317-5	C
12-76	H317-6	D

USED ON OPTION/MODEL
H317

DRN.	P. MARCOTTE	DATE	11/1/2
CHK'D.	C. Tessmer	DATE	1/29/73
PROJ ENG.		DATE	
PROD.		DATE	
FIELD SERV.		DATE	1-25-73
SHEET 1 OF 3			

TITLE: H317 CABLE BOX ASSY.

SIZE	CODE	NUMBER	REV
B	DD	H317-0	D

DIST

DRB 106

DEC 16 (325) 1062 1-N871

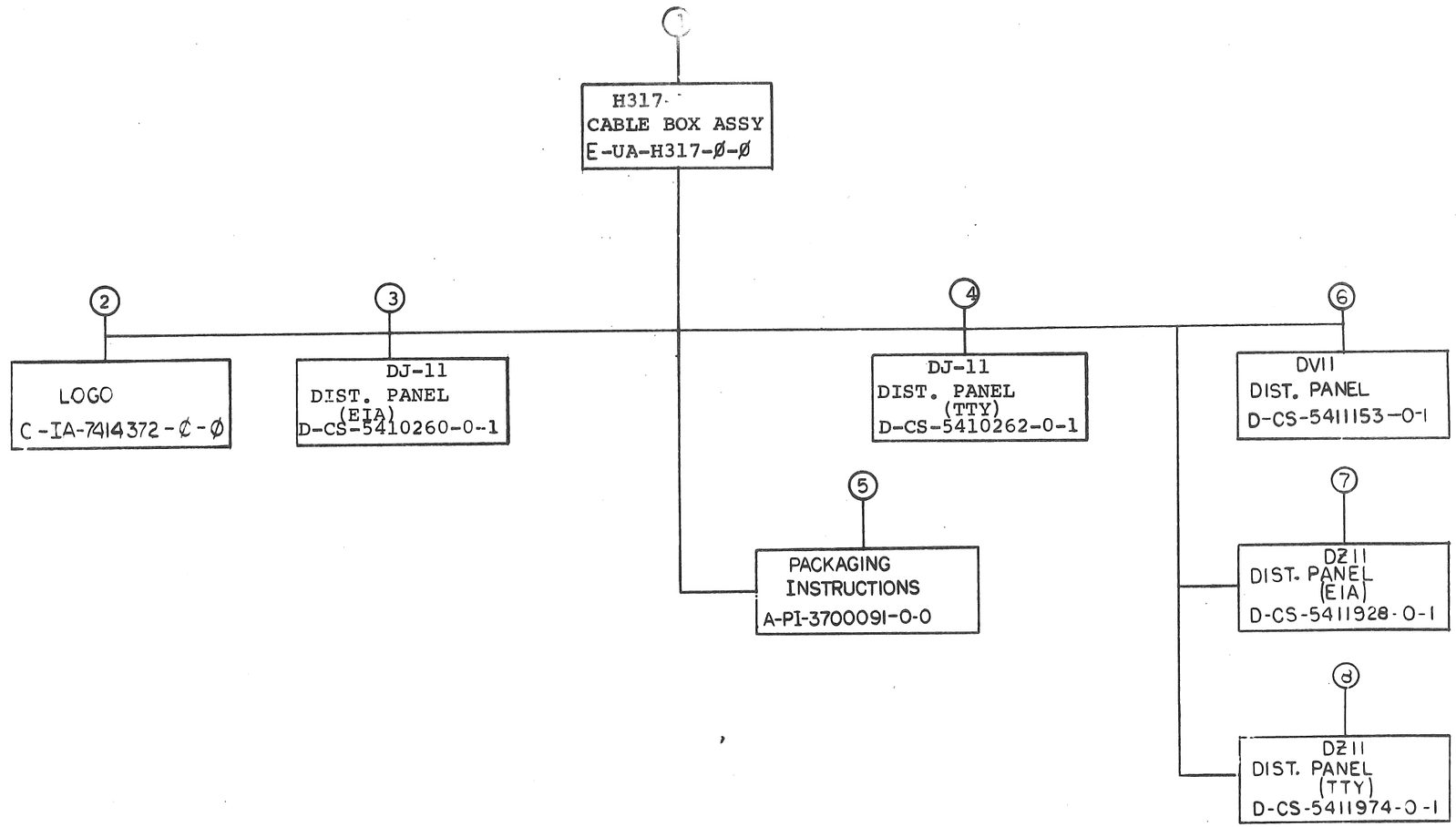

TITLE	SHEET	SIZE	CODE	NUMBER	REV
H317 CABLE BOX ASSY.	2 OF 3	B	DD	H317-Ø	D

ELECTRICAL

CUSTOMER PRINT SET 1	DEPOT SET	FIND NO.	DRAWING NO.	REV	NO OF SHT	DESCRIPTION	OPTION NO.
X		1	D-UA-H317-Ø-Ø	C	1	H317 CABLE BOX ASSY	
		2	E-IA-7410667-0-0		1	COVER, CABLE BOX	
X		3	D-CS-5410260-0-1	#	3	DJ-11 DIST. PANEL (EIA)	
			B-MH-5410260-0-6		1	MODULE ECO HISTORY	
X		4	D-CS-5410262-0-1	#	6	DJ-11 DIST. PANEL (TTY)	
			B-MH-5410262-0-6		1	MODULE ECO HISTORY	
X		6	D-CS-5411153-0-1	#	3	DV11 DIST PANEL	
			B-MH-5411153-0-6	#	1	MODULE ECO HISTORY	
X		7	D-CS-5411928-0-1	#	2	DØ11 DIST. PANEL (EIA)	
			B-MH-5411928-0-6	#	1	MODULE ECO HISTORY	
X		8	D-CS-5411974-0-1	#	1	DØ11 DIST. PANEL (TTY)	
			B-MH-5411974-0-6	#	1	MODULE ECO HISTORY	

MECHANICAL

CUSTOMER PRINT SET 1	DEPOT SET	FIND NO.	DRAWING NO.	REV	NO OF SHT	DESCRIPTION	OPTION NO.
		1	E-UA-H317-Ø-Ø		1	H317 CABLE BOX ASSY	
			E-IA-7416243-0-0		1	H317 MTG PLATE	
			D-MD-7416248-0-0		1	BAR SLIDE	
			A-DC-7410681-0-0		1	DECAL, TERM BLOCK	
			D-PS-1213318-0-0		1	BAR, CABLE HOLDOWN	
			D-PS-1212632-0-0		1	COVER CABLE BOX PLASTIC	
		2	C-IA-7414372-0-0		1	LOGO	
			A-SS-7414372-0-1		1	SILKSCREEN H317-A	
			A-SS-7414372-0-2		1	SILKSCREEN H317-B	
			A-SS-7414372-0-3		1	SILKSCREEN H317-C	
			A-SS-7414372-0-6		1	SILKSCREEN H317-E	
			A-SS-7414372-0-7		1	SILKSCREEN H317 F	
		3	D-CS-5410260-0-1	#	3	DJ-11 DIST. PANEL (EIA)	
			K-CO-5410260-0-4		1	X-Y COORDINATE HOLE LOCATION	
			D-AH-5410260-0-5		1	ASSY/DRILLING HOLE LAYOUT	
			B-MH-5410260-0-6		1	MODULE ECO HISTORY	
		4	D-CS-5410262-0-1	#	6	DJ-11 DIST. PANEL (TTY)	
			K-CO-5410262-0-4		1	X-Y COORDINATE HOLE LOCATION	
			D-AH-5410262-0-5		1	ASSY/DRILLING HOLE LAYOUT	
			B-MH-5410262-0-6		1	MODULE ECO HISTORY	
	X	5	A-PI-3700091-0-0		2	PACKAGING INSTRUCTIONS	
			A-PS-9905315-0-0		2	OUTER CARTON	
			A-PS-9905317-0-0		2	LAMINATED TRAY	
			A-PS-9905316-0-0		2	CORRUGATED PAD	
		6	D-CS-5411153-0-1	#	3		
			K-CO-5411153-0-4		1		
			D-AH-5411153-0-5		1		
			B-MH-5411153-0-6		1		
		7	D-CS-5411928-0-1	#	2	DØ11 DIST. PANEL (EIA)	
			K-CO-5411928-0-4		1	X-Y COORDINATE HOLE LOC.	
			E-MD-5011927-0-0		4	ASSY/DRILLING HOLE LAYOUT	
			B-MH-5411928-0-6		1	MODULE ECO HISTORY	
		8	D-CS-5411974-0-1	#	1	DØ11 DIST. PANEL (TTY)	
			K-CO-5411974-0-4		1	X-Y COORDINATE HOLE LOC.	
			D-MD-5011973-0-0		3	ASSY/DRILLING HOLE LAYOUT	
			B-MH-5411974-0-6		1	MODULE ECO HISTORY	

TITLE	SHEET	SIZE	CODE	NUMBER	REV
H317 CABLE BOX ASSY.	3 OF 3	B	DD	H317-Ø	D

DRB 108

NOTES

1. IF ITEM #11 IS USED THE DECAL (ITEM #24) IS TO BE APPLIED TO THE INSIDE SURFACE OF COVER (ITEM 20)
2. PRIOR TO MTG. DIST. PANEL, ADHERE NYLON WASHER (ITEM #21) TO STANDOFFS ON MTG PANEL (ITEM #1) USING ECO BOND ADHESIVE (ITEM #16) AND ALLOW TO DRY.
3. USE ASSY TOOL #9608416 TO POSITION LOGO ITEM #4 THRU #9 ON COVER (ITEM #20)
4. ON H317-A USE UPPER HOLES, ON H317-E USE MIDDLE HOLES.

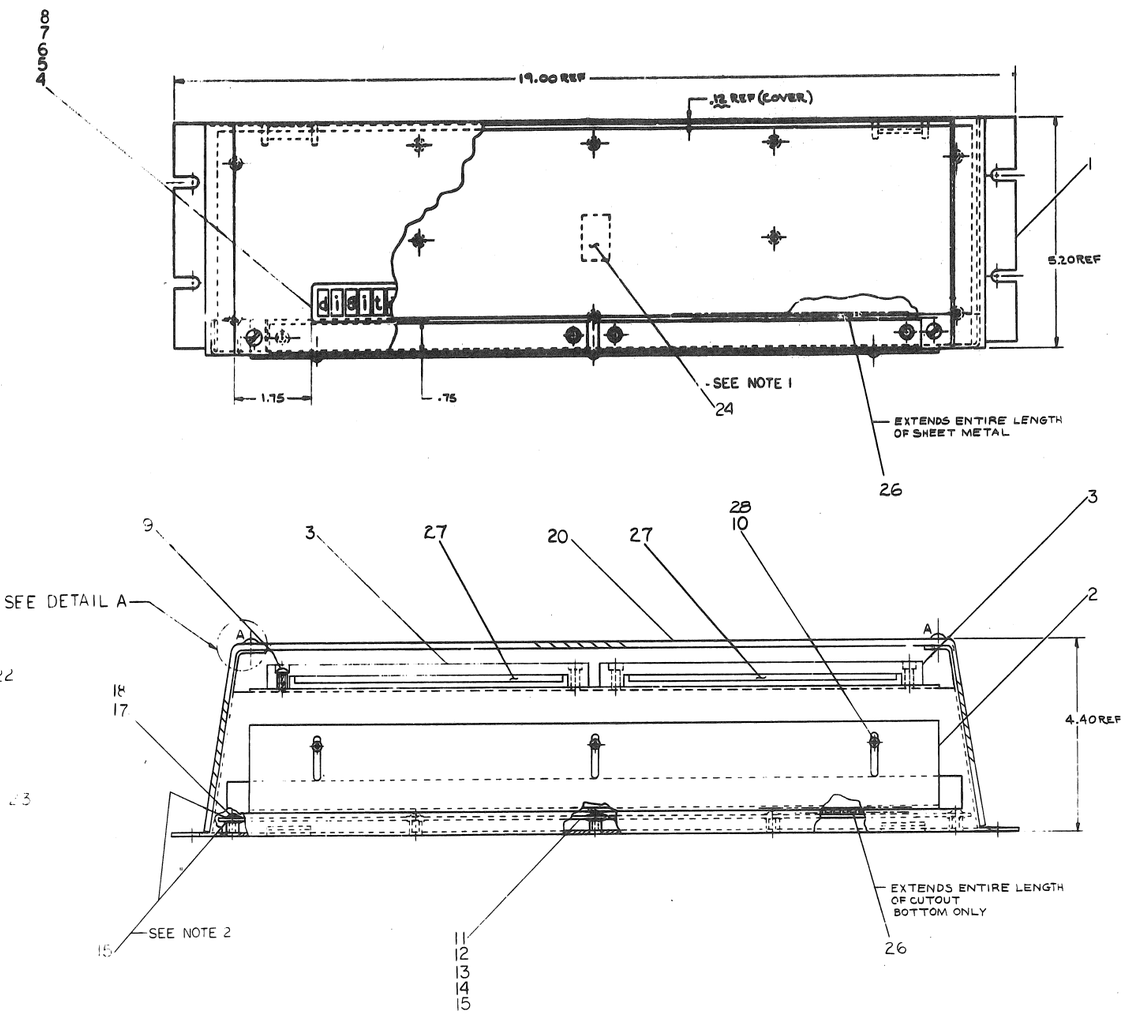

3	3	3	3	3	LOCKWASHER INT #6	9006634	32
2	2	2	2	2	FOAM, ADHESIVE .12X.5X6.0	9009087-1	31
A/R	A/R	A/R	A/R	A/R	GROMMET ALLIGATOR	9007085	28
1	1	1	1	1	PACKING INSTRUCTIONS	A-PI-3703091-0-0	27
—	—	—	—	1	DECAL	A-DC-7410681-0-0	26
2	2	2	2	2	FASTENER STUD, 1/4 TURN	9008446-0-0	25
2	2	2	2	2	RETAINER, SPLIT RING	9008200	24
10	20	20	20	16	WASHER, NYLON #8	9006708	23
1	1	1	1	1	COVER, CABLE BOX PLASTIC	D-PS-1212632-0-0	20
2	2	2	2	2	RECEPTACLE CLIPON	9008196	19
8	10	10	10	8	LOCKWASHER INT #8	9006634	18
8	10	10	10	8	SCR. PHL HD. 8-32 X .25 LG.	9006035-1	17
A/R	A/R	A/R	A/R	A/R	ECOBOND ADHESIVE	9009156	16
—	—	1	—	—	DV11 DIST. PANEL	D-CS-5411153-0-1	15
1	—	—	—	—	DZ11 DIST PANEL (TTY)	D-CS-5411974-0-1	14
—	1	—	—	—	DZ11 DIST PANEL (EIA)	D-CS-5411928-0-1	13
—	—	—	1	—	DJ11 DIST PANEL (EIA)	D-CS-5410260-0-1	12
—	—	—	—	1	DJ11 DIST PANEL (TTY)	D-CS-5410262-0-1	11
3	3	3	3	3	SCR. PHL PAN HD. #6-32X.25LG.	9006020-1	10
4	4	4	4	4	SCR. PHL PAN HD. #6-32X.62LG.	9006025-1	9
1	—	—	—	—	LOGO H317-F	C-IA-7414372-6-0	8
—	1	—	—	—	LOGO H317-E	C-IA-7414372-5-0	7
—	—	1	—	—	LOGO H317-C	C-IA-7414372-2-0	6
—	—	—	1	—	LOGO H317-B	C-IA-7414372-1-0	5
—	—	—	—	1	LOGO H317-A	C-IA-7414372-0-0	4
2	2	2	2	2	BAR, CABLE HOLD DOWN	D-PS-1213318-0-0	3
1	1	1	1	1	BAR, SLIDE	D-MD-7416248-0-0	2
1	1	1	1	1	H317 MOUNTING PLATE	E-IA-7416243-0-0	1
H317-F	H317-E	H317-C	H317-B	H317-A	DESCRIPTION	DWG./PART NO.	ITEM NO.

QUANTITY & VARIATION

UNLESS OTHERWISE SPECIFIED DIMENSIONS ARE IN INCHES

ANGLES ±0° 30'	CLASS OF ACCURACY (DECIMAL)	NOMINAL DIMENSION RANGE INCHES					
		OVER 0 TO 0.5	OVER 0.5 TO 1.5	OVER 1.5 TO 4.0	OVER 4.0 TO 12.0	OVER 12.0 TO 40.0	OVER 40.0 TO 80.0
SURFACE QUALITY IN MICROINCHES	MEDIUM	±.004	±.005	±.012	±.016	±.024	±.04
	PREFERRED	±.012	±.016	±.025	±.06	±.063	±0.1

THIRD ANGLE PROJECTION

REMOVE BURRS AND BREAK SHARP CORNERS

DO NOT SCALE DWG

MATERIAL: SEE PARTS LIST

FINISH: —

DRN. Will Walker 20 FEB 70
CHK'D. D. Flanagan 6 OCT 70
ENG. [illegible] 6 OCT 70
PROJ. ENG. [illegible] 6 OCT 70
PROD. [illegible] 6 OCT 70

NEXT HIGHER ASSY. B-DD-H317-0

SCALE 1/1

SHEET 1 OF 1

FIRST USED ON H317

digital

TITLE: H317 CABLE BOX ASSY

SIZE E | CODE UA | NUMBER H317-0-0

DIST.

CHG	REVISIONS	REV.
	CHANGE NO.	
	H317-A-0-0	
	REVISED & REDRAWN	
	>>> ADDED B & C	
	T. REILLY	

DEC FORM NO DRE 1009

SIZE	CODE	NUMBER	REV.
B	DD	5411928-0-0	C

DRAWING NO.	NO. OF SHTS	PART NO.	DESCRIPTION	REVISIONS	
D-CS-5411928-0-1	2		CIRCUIT SCHEMATIC	B	C
B-MH-5411928-0-6	1		MODULE ECO HISTORY	*	A
E-UA-5411928-0-0	3		DZ11 EIA DISTRIBUTION PANEL	B	B
		5011927	ETCHED BOARD	C	C
5411928-0-L	1		P.C. DESIGN DATA BASE	REF	-
5411928-0-PL	1		INSERTION P/L DATA BASE	REF	-
B-PL-5411928-0-0	1		PARTS LIST	B	B
E-MD-5011927-0-0	4		DRILL & ETCH DRAWING	B	B

NOTES:

REVISIONS		
DATE	CHG NO.	REV.
[illegible]	10000	C

digital

USED ON OPTION/MODEL

DRN.	SHETRAWSKI	3-22-76
CHK'D	SHETRAWSKI	3-22-76
ENG.	[illegible]	[illegible]
PROD.	R. Walk	[illegible]-76

TITLE: DZ11 EIA DISTRIBUTION PANEL

SIZE	CODE	NUMBER	REV.
B	DD	5411928-0	C

SHEET 1 OF 1

DRB .26 EN-01149-16-N176(325)

DIGITAL EQUIPMENT CORPORATION
PARTS LIST

MADE BY R. A. CORMIER	CHECKED R. A. Cormier	SECTION 1
DATE 2-12-76	DATE 3-24-76	
ENG Robert A. Cormier	PROD R. Wall	ISSUED SECTION 1
DATE 3-26-76	DATE 3-26-76	

NOTES:

ITEM NO.	DRAWING NO.	PART NO.	DESCRIPTION	QUANTITY/VARIATION	REF DESIGNATION
1	E-MD-5011927-0-0	5011927	ETCHED CIRCUIT BOARD	1	
2		1209941-03	LATCH, LEFT FOR RT. ANG. HEADER	2	
3		1209941-04	LATCH, RIGHT FOR RT. ANG. HEADER	2	
4		1209941-07	CONN. 5ØP. RT. ANG.HEADER	2	J18, J20
5		1205886-01	CONN. D-SUB MIN W/PC TERM	16	J1-J16
6		9009113-10	STANDOFF P.C. BOARD 4-4Ø X .187	32	
7		9008451	SCREWLOCK D2Ø418-2 4-4Ø X .312	32	
8		9009185	JUMPER, WIRE INSULATED	80	W1-W8Ø

E.C.O NO.

TITLE	ASSY NO.	SIZE	CODE	NUMBER	REV.
DZ11 EIA DISTRIBUTION PANEL	E-UA-5411928-0-0	B	PL	5411928-0-0	B
	SHEET 1 OF 1	INSERTION PARTS LIST DATA BASE REV			

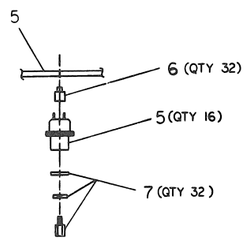

VIEW A-A
(16 PLACES)

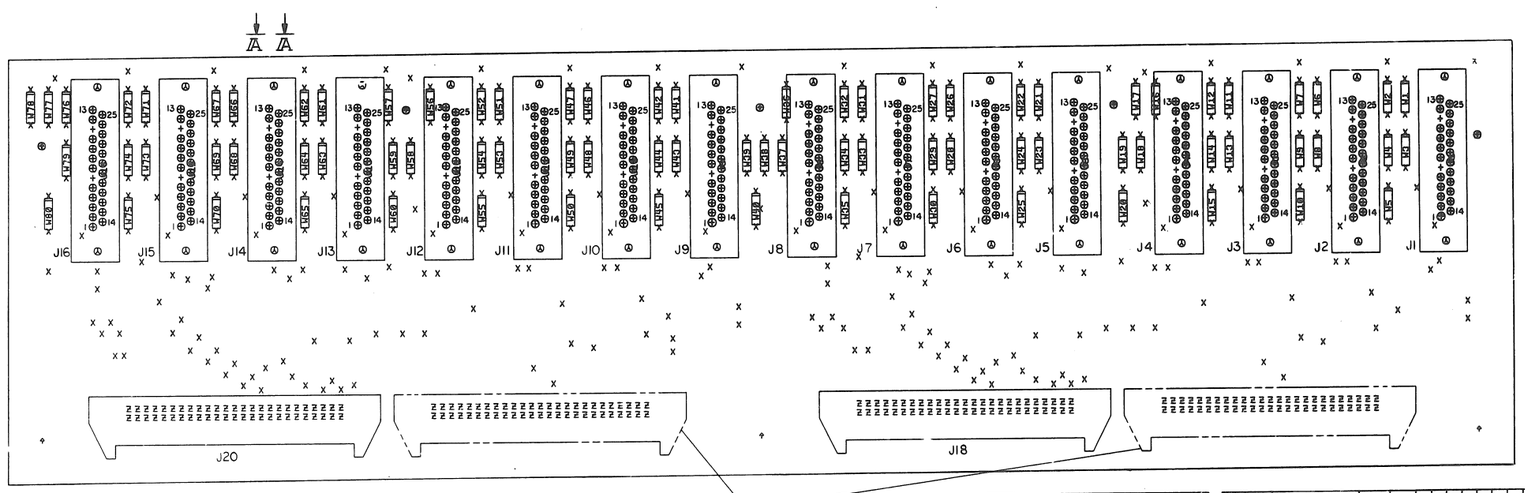

NOTES:
1. BOARD MUST BE DRILLED ON TRUE DRILL MACHINE.
2. .166 HOLES ARE CRITICAL
3. CONN. BLOCKS IN PHANTOM ARE OPTIONAL.

CHG/CHANGE NO.	REV

ETCH REV.
P.C. DESIGN DATA BASE REV.

SIGNATURES	DATE
DRN.	
CHK'D.	
ENG.	
PROJ. ENG.	
PROD.	

digital

TITLE PANEL, EIA DISTRIBUTION

SCALE	SIZE	CODE	NUMBER	REV
2/1	E	UA	5411928-0-0	B

SHT. 1 OF 3
NEXT HIGHER ASSY. E-DD-5411928-0-0

5411928-0-0 B

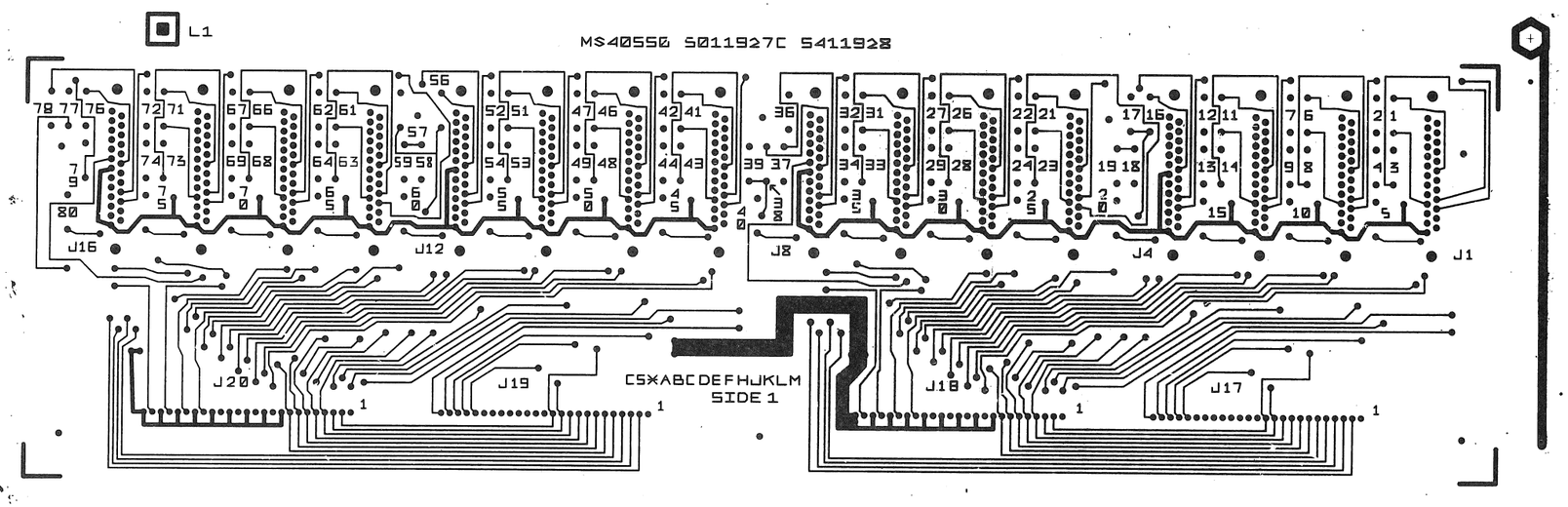

TITLE	SIZE	CODE	NUMBER
FIX DISTRIBUTION PANEL	E	UA	[illegible]-0-0
SCALE	SHEET	OF	DIST

54-1928-0 0

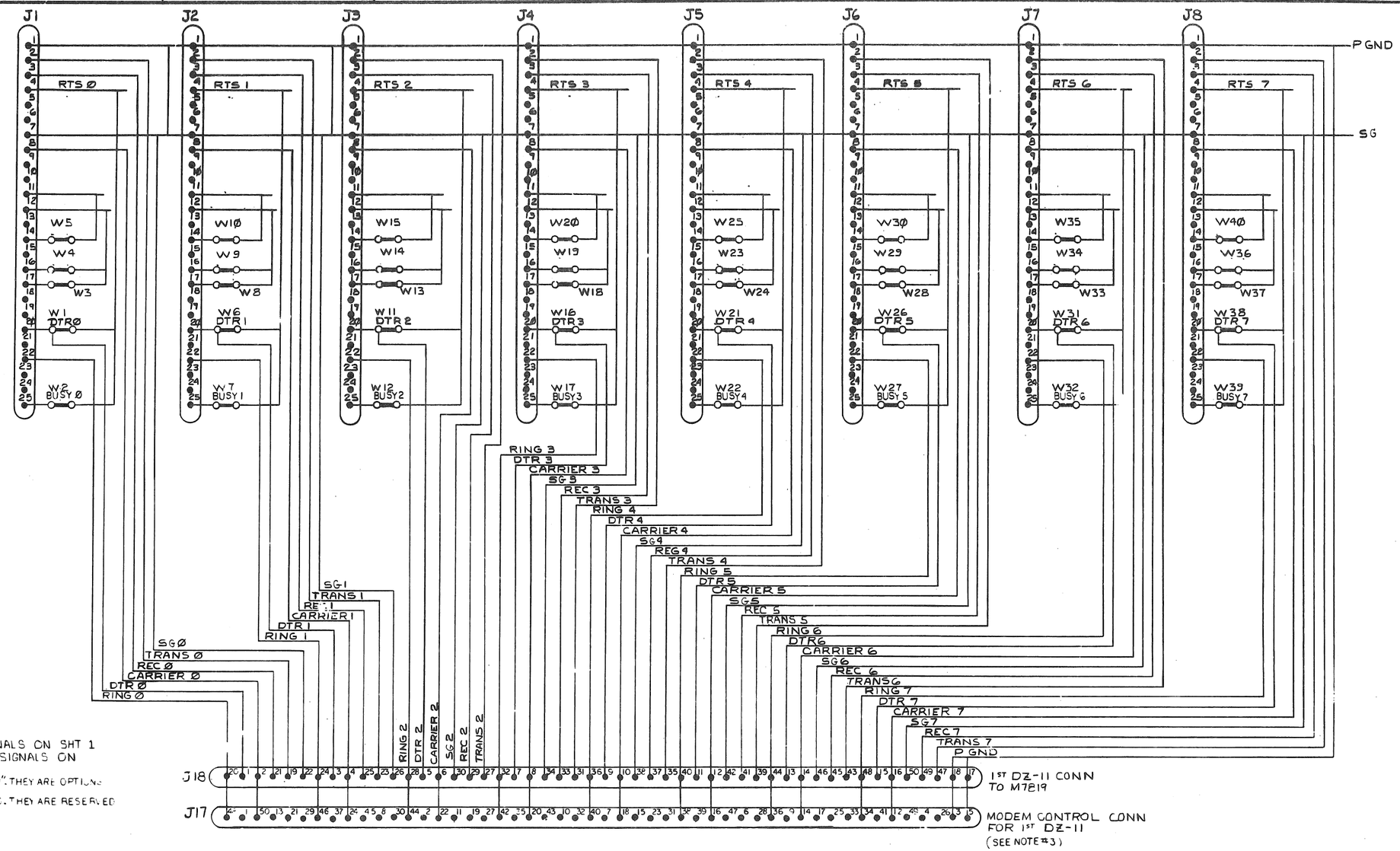

NOTES:

1. EXCEPT FOR PGND, SIGNALS ON SHT 1 DO NOT CONNECT WITH SIGNALS ON SHT 2.
2. ALL JUMPERS ARE NORMALLY "IN". THEY ARE OPTIONS RESERVED FOR FUTURE USE.
3. J17 AND J19 ARE NOT INSTALLED. THEY ARE RESERVED FOR FUTURE USE.

REVISIONS		
CHK	CHANGE NO.	REV.
—	ORIGINATED	#
	5411928-00001	C
	H. Dynamoral 6-4-76	
	RACOTIMER	

DRN	MD	Nov. 11 1975
CHK'D		11/24/75
ENG		3-26-76
PROJ ENGR		3-26-76
PROD.		3-26-76
NEXT HIGHER ASSY.	E-AH-5411928-0-5	
SCALE	—	
SHEET 1 OF 2		

FIRST USED ON: H317E

digital

TITLE: DZ11 EIA DIST PANEL

SIZE	CODE	NUMBER	REV.
D	CS	5411928-0-1	C

DIST.

DEC FORM NO. DRD 102-D

1ST DZ-11 CONNECTIONS

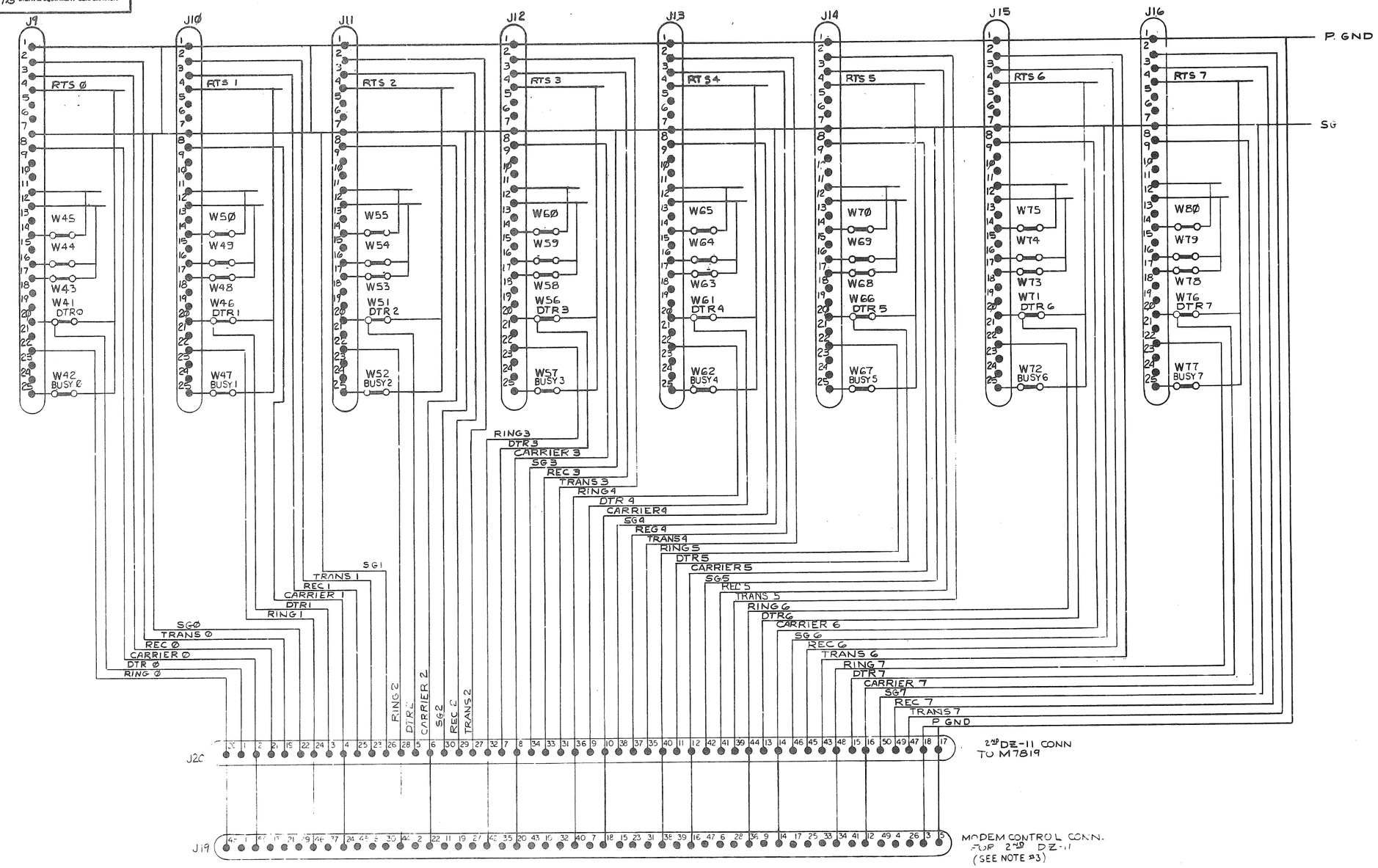

REVISIONS		
CHK	CHANGE NO.	REV.

TITLE	SIZE	CODE	NUMBER	REV.
DZ11 EIA DIST PANEL	D	CS	5411928-Ø-1	C
SCALE —	SHEET 2 OF 2	DIST.		

DEC FORM NO. DRD 138

LEGEND	
NUMBER	DIM. "X" VAR.
BCØ5W - Ø2	2 FT. ± 1 IN.
BCØ5W - Ø4	4 FT. ± 1 IN.
BCØ5W - 15	15 FT. ± 3 IN.

NOTE
1. THIS CABLE IS POINT TO POINT. PIN #1 TO PIN #50 AND PIN #2 TO PIN #49 ETC., ETC..
2. STRIP BACK SHIELDING APPROX 1" INCH

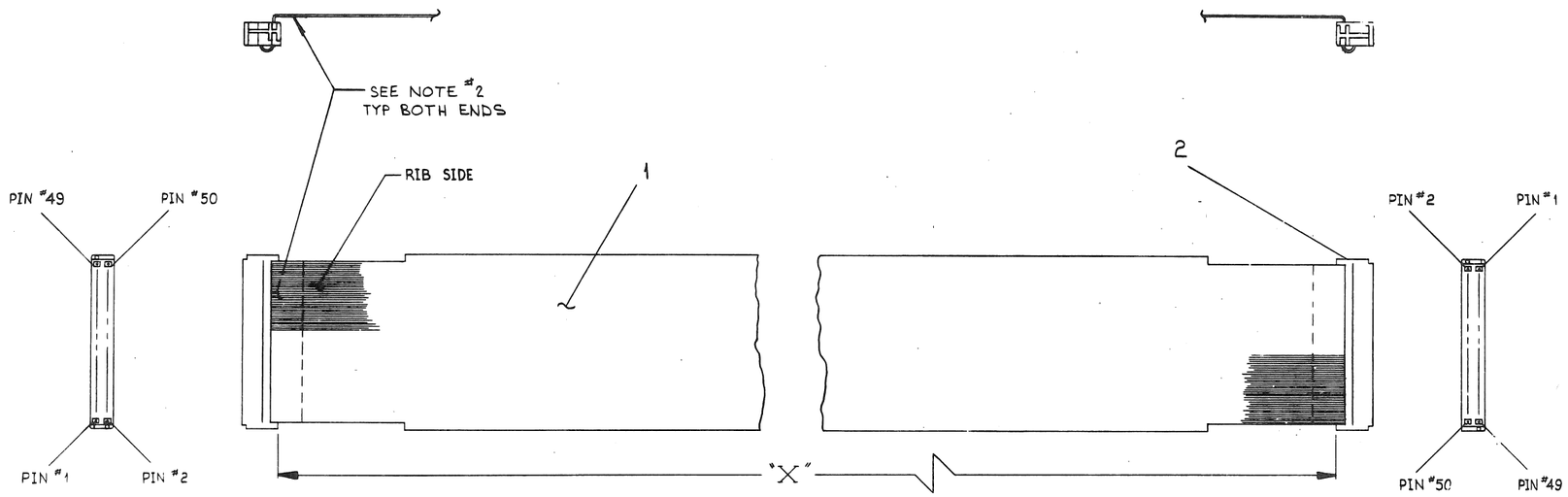

QTY.	DESCRIPTION	PART NO.	ITEM NO.
2	CABLE CONN., 50 COND. FLUTE	1211664	2
1	CABLE, 50 COND FLATSHIELDED	1700004-01	1

PARTS LIST

REV.	CHANGE NO.	CHK
A	BCØ5W-00001	
B	BCØ5W-Ø-Ø	

FIRST USED ON OPTION/MODEL: KL341-B

DIMENSIONAL TOLERANCE
DIMENSIONS ARE MILLIMETERS / INCHES UNLESS OTHERWISE SPECIFIED

MILLIMETERS	INCHES	ANGLES
X.XX = ±0.10	.XXX = ±.005	±0° 30'
X.X = ±0.5	.XX = ±.02	
X = ±2	X = ±1	

THIRD ANGLE PROJECTION

REMOVE BURRS AND BREAK SHARP CORNERS SURFACE QUALITY ✓

MATERIAL: SEE PARTS LIST
FINISH: —/—

		DATE
DRN.	M. Sachs	5-15-74
CHK'D.	[illegible]	5-17-74
ENG.		
PROJ. ENG.		
PROD.	[illegible]	5/20/74

NEXT HIGHER ASSY.: —/—

SCALE NONE
SHEET 1 OF 1

digital

TITLE: 50 CONDUCTOR SIGNAL CABLE (BCØ5W)

SIZE	CODE	NUMBER	REV.
D	IA	BCØ5W-Ø-Ø	B

DIST.

DEC FORM NO. ORD 100-8

NOTES:
1. * THE BCØ5D, BCØ3M & BCØ3P CABLES ARE NOT INCLUDED IN THE DZ11 OPTION AND MUST BE ORDERED SEPARATELY.

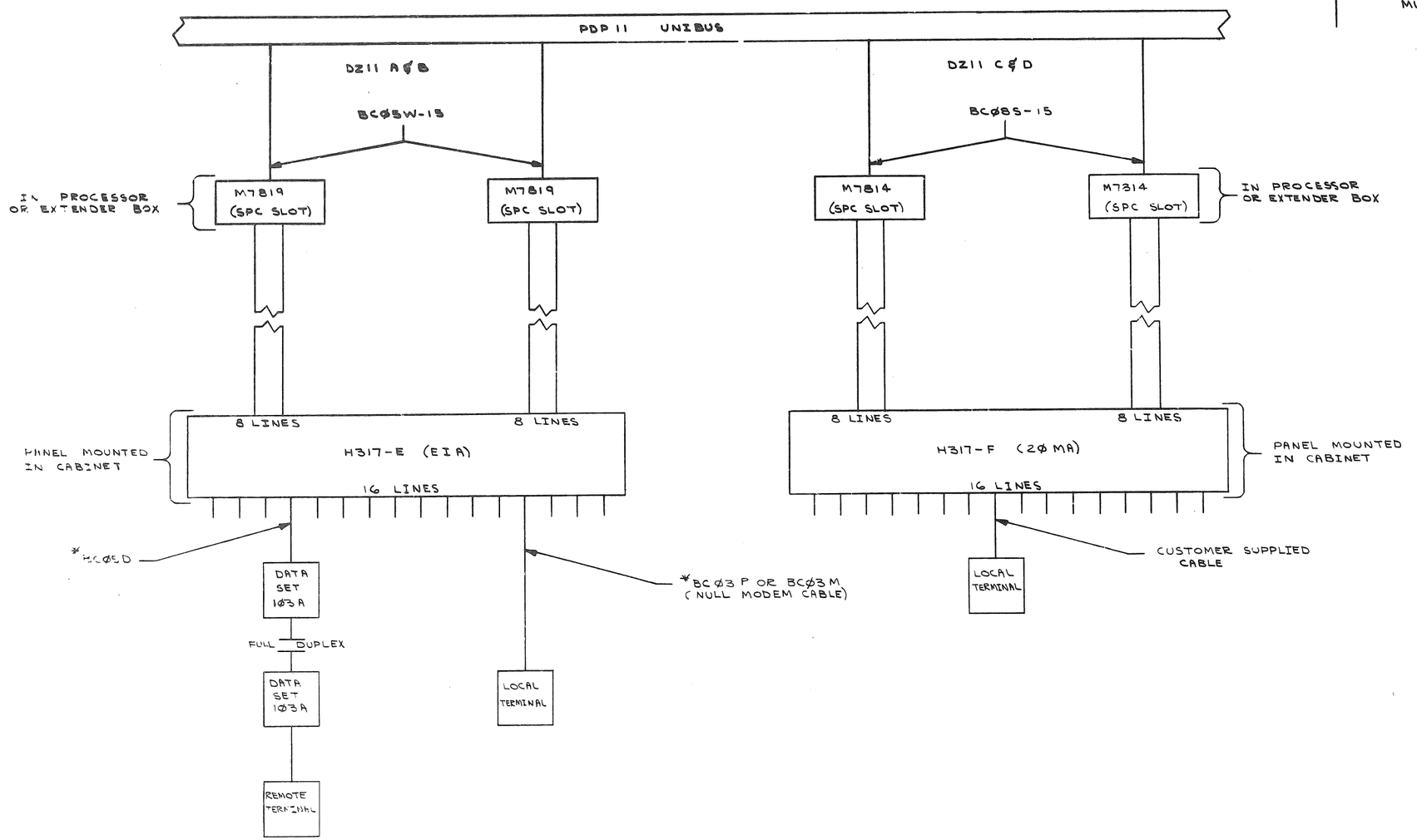

REVISIONS		
REV.	CHANGE NO.	CHK.

DRN.		3-1-76
CHK'D		5-14-76
ENG.		
PROJ. ENG.		
PROD.		
NEXT HIGHER ASSY.	D-UA-DZ11-Ø-Ø	
SCALE		
SHEET	OF	

FIRST USED ON DZ11

digital

TITLE SYSTEM CONNECT DIAGRAM

SIZE	CODE	NUMBER	REV.
D	BD	DZ11-Ø-8	

DIST.

DEC FORM NO. DRD 102-D

NOTES:
1. DO NOT REMOVE SHIPPING BRACKET.
2. TEST CONNECTORS ITEMS 2 & 5 (NOT SHOWN) ARE USED FOR TESTING DZ11 A,B&E

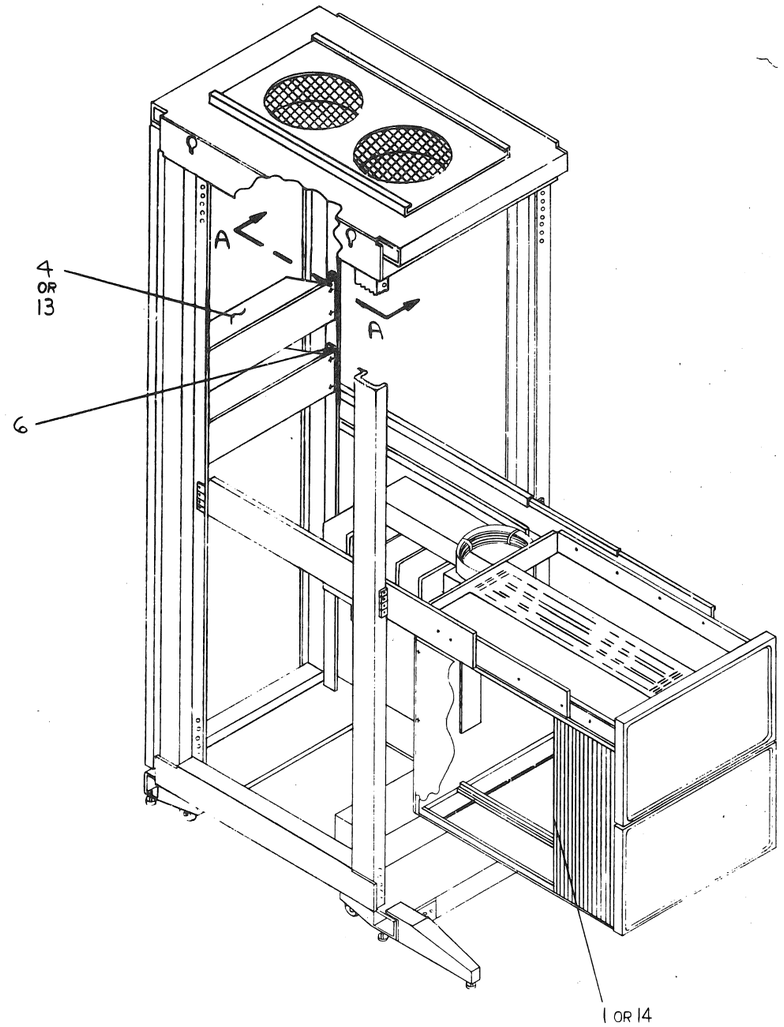

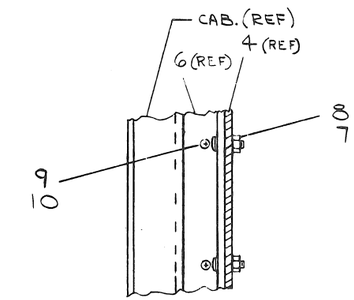

SECTION A-A

FOR PARTS LIST SEE H-PL-DZ11-0 0

DESCRIPTION	DWG./PART NO.	ITEM NO.

UNLESS OTHERWISE SPECIFIED DIMENSIONS ARE IN INCHES

ANGLES 10° 30'	CLASS OF ACCURACY (CHECK ONE)	NOMINAL DIMENSION RANGE INCHES OVER 0 TO 0.2	OVER 0.2 TO 1.2	OVER 1.2 TO 4.0	OVER 4.0 TO 12.0	OVER 12.0 TO 40.0	OVER 40.0 TO 80.0
SURFACE QUALITY IN MICROINCHES	MEDIUM	±.004	±.008	±.012	±.016	±.024	±.04
	PREFERRED	±.012	±.016	±.025	±.04	±.063	±0.1

QUANTITY & VARIATION

THIRD ANGLE PROJECTION

REMOVE BURRS AND BREAK SHARP CORNERS

DO NOT SCALE DWG

MATERIAL SEE PARTS LIST

FINISH

DRN. 5-4-76
CHK'D 5-19-76
ENG.
PROJ. ENG.
PROD.

NEXT HIGHER ASSY.

SCALE NONE

SHEET 1 OF 2

FIRST USED ON DZ11

digital

TITLE UNIT ASSY DZ11

SIZE	CODE	NUMBER	REV.
D	UA	DZ11-0-0	A

DIST.

REVISIONS		
CHK	CHANGE NO.	REV.

DEC FORM NO DRD 100

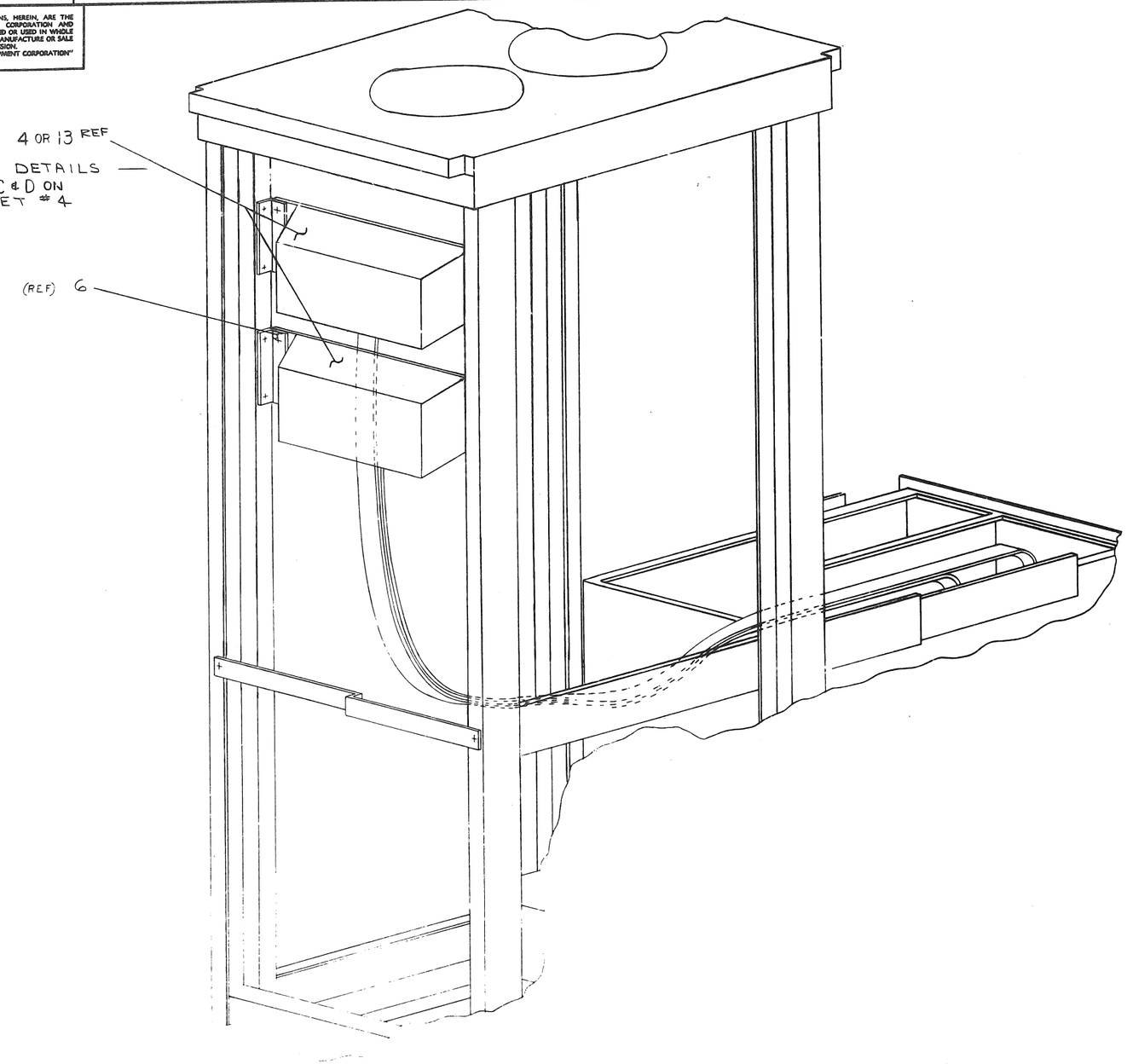

REVISIONS		
CHK	CHANGE NO	REV.

TITLE	SIZE	CODE	NUMBER	REV
	D	UA	DZ11-00	
SCALE	SHEET 2 OF 4	DIST		

REV	CODE	NUMBER
A	UA	DZ11-0-0

REV	CODE	NUMBER
D	UA	DZ11-0-0

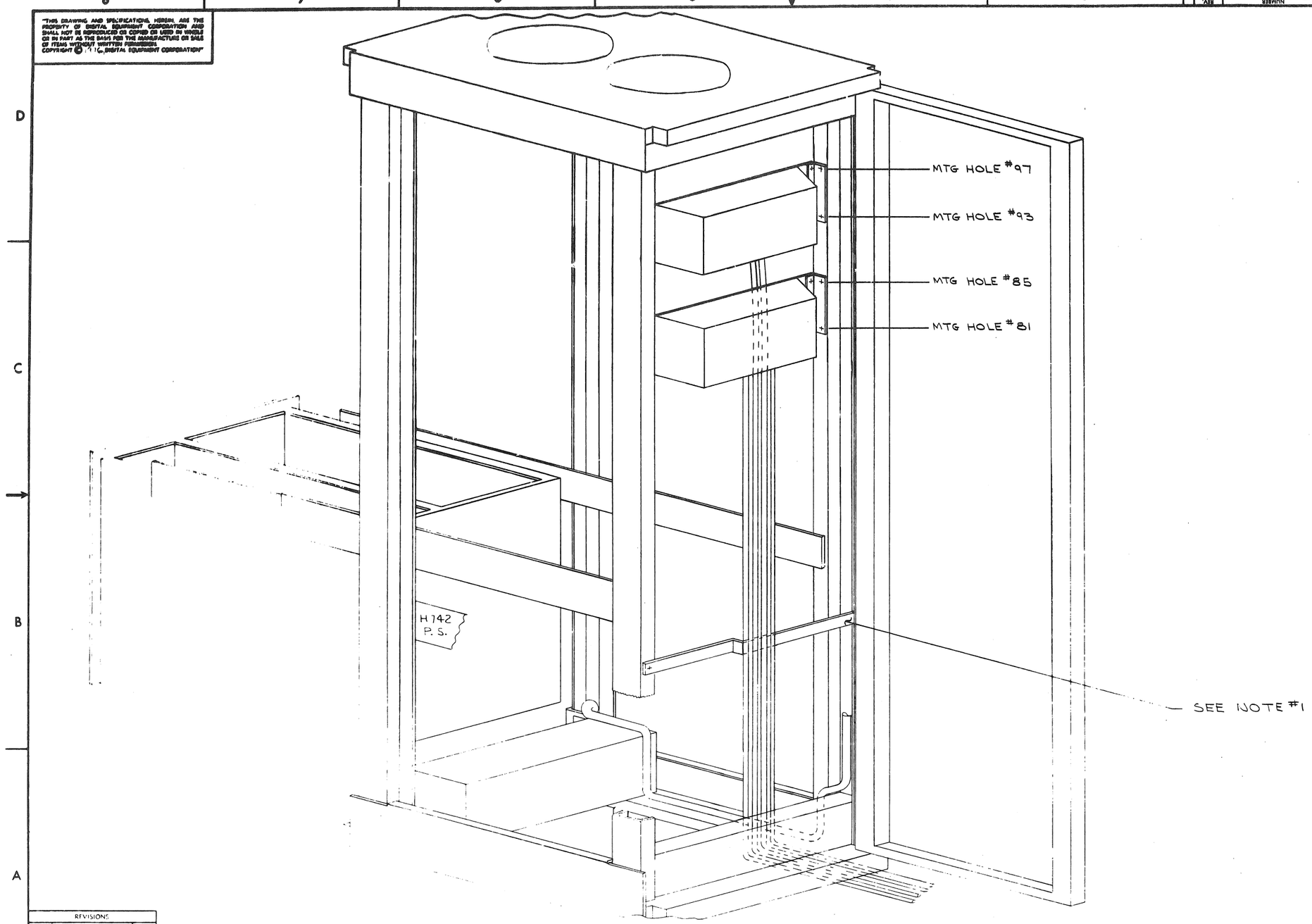

REVISIONS		
CHG	CHANGE NO.	REV

TITLE	SIZE	CODE	NUMBER	REV.
UNIT ASSY DZ11	D	UA	DZ11-Ø-Ø	A
SCALE NONE / SHEET 3 OF 4	DIST.			

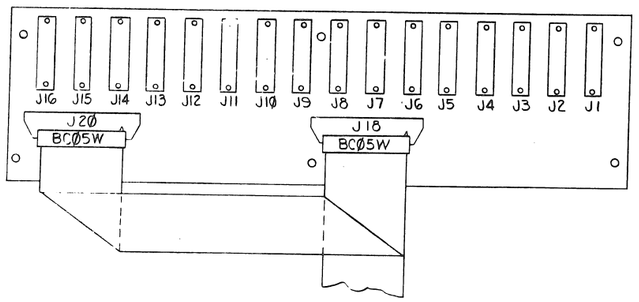

DETAIL A

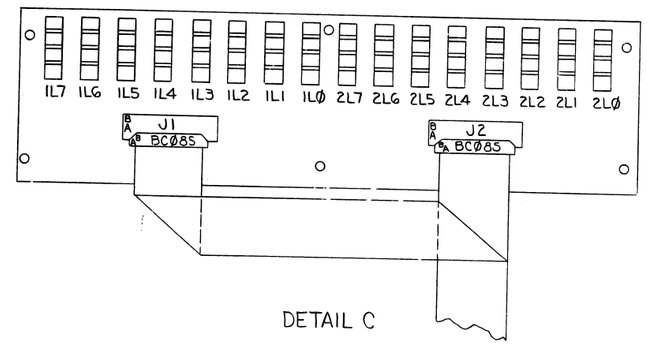

DETAIL C

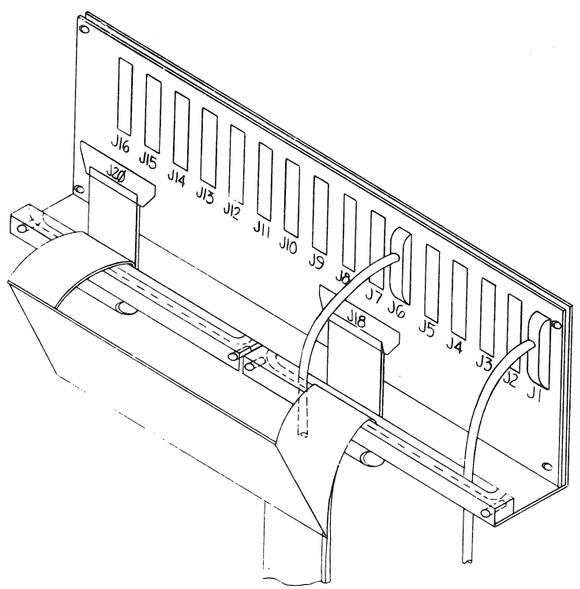

DETAIL B

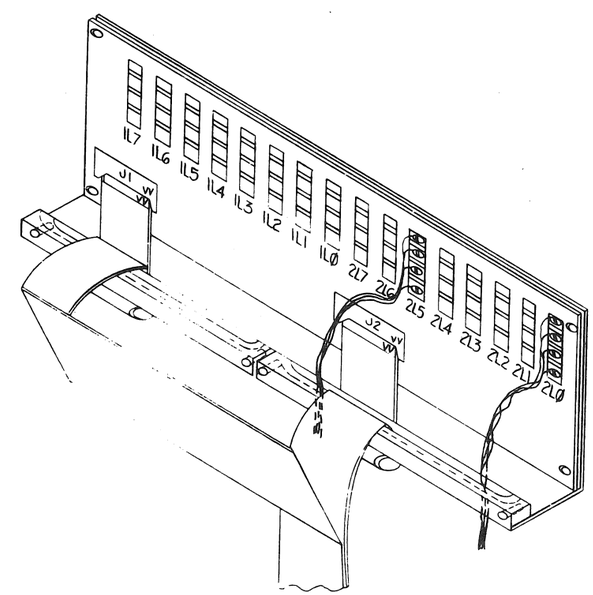

DETAIL D

REVISIONS		
CHK	CHANGE NO.	REV.

TITLE	SIZE	CODE	NUMBER	REV.
UNIBUS DZ11	D	UA	DZ11-0-0	A
SCALE NONE	SHEET 4 OF 4	DIST.		

DEC FORM NO DRD 137

DIGITAL EQUIPMENT CORPORATION
MAYNARD, MASSACHUSETTS

PARTS LIST

MADE BY K. DAVIS DATE 5-4-76	CHECKED P. Cappadonna DATE 14 May 76	SECTION
ENG Robert A. Kornier DATE 5-13-76	PROD Jon M. Cabel DATE 5-14-76	ISSUED SECT.

ITEM NO.	DWG NO./PART NO.	DESCRIPTION	QUANTITY/VARIATION DZ11-A	DZ11-B	DZ11-E	DZ11-C	DZ11-D	DZ11-F						
1	D-UA-M7819-Ø-Ø	8 LINE EIA ASYNCHRONOUS MUX	1	1	2	-	-	-						
2	C-IA-H327-Ø-Ø	CONNECTOR, TURN AROUND	1	1	2	-	-	-						
3	D-IA-BCØ5W-15	5Ø CONDUCTOR SIGNAL CABLE (BCØ5W)	1	1	2	-	-	-						
4	D-UA-H317-E-Ø	H317 CABLE BOX ASSY (EIA)	1	-	1	-	-	-						
5	D-CS-H325-Ø-1	H325 TEST CONNECTOR	1	-	1	-	-	-						
6	C-MD-7414386-0-0	BRACKET, PANEL	2	-	2	2	-	2						
7	9006071-03	SCR,PH,TRUSS,HD, 10-32 X .38	4	-	4	4	-	4						
8	9006565-00	NUT, KEP 10-32	4	-	4	4	-	4						
9	9006073-02	SCR,PH,FL,HD, 10-32 X .50	4	-	4	4	-	4						
10	9007786-00	NUT, SPEED 10-32	4	-	4	4	-	4						
11	D-BD-DZ11-Ø-8	SYSTEM CONNECT DIAGRAM	REF	REF	REF	REF	REF	REF						
12	C-IA-BCO8S-15	40 CONDUCTOR SIGNAL CABLE (BCO8S)	-	-	-	1	1	2						
13	D-UA-H317-F-Ø	H317 CABLE BOX ASSY (20 MA)	-	-	-	1	-	1						
14	D-UA-M7814-Ø-Ø	8 LINE 20 MA ASYNCHRONOUS MUX	-	-	-	1	1	2						

TITLE	ASSY NO.	SIZE	CODE	NUMBER	REV.	ECO NO.
PARTS LIST DZ11	D-UA-DZ11-Ø-Ø SHEET 1 OF 1	A	PL	DZ11-Ø-Ø DIST.	A	DZ11-00001

DEC FORM DEC 16-(325)-1031-N870
DRA 110

DRAWING DIRECTORY

FOR FIELD MAINTENANCE PRINT SET SEE:

B-TC-DZ11-Ø-6 (DZ11-A & E)
B-TC-DZ11-Ø-1Ø (DZ11-B)
B-TC-DZ11-Ø-11 (DZ11-C&F)
B-TC-DZ11-Ø-12 (DZ11-D)

UNIT VARIATIONS

VAR	TITLE
DZ11-A	8 LINE DBL BUF ASYNC EIA MUX
DZ11-B	DZ11-A MINUS DISTRIBUTION PANEL
DZ11-E	16 LINE ASYNC MUX EIA
	(DZ11-A + DZ11-B)
DZ11-C	8 LINE DBL BUF ASYNC 20MA MUX
DZ11-D	DZ11-C MINUS DISTRIBUTION PANEL
DZ11-F	16 LINE ASYN MUX-20MA (DZ11-C & DZ11-D)

REVISIONS		
CHK	CHANGE NO.	REV.
	DZ11-1	A

USED ON OPTION/MODEL	
DZ11	

SHEET 1 OF 3

DRN. K. DAVIS	DATE 5-6-76	TITLE EIA ASYNCHRONOUS MUX DZ11	digital
CHK'D.	DATE 5-19-76		
PROJ. ENG.	DATE	SIZE B / CODE DD / NUMBER DZ11-Ø	REV A
PROD.	DATE	DIST.	

EN-01062-1A-16-R972-(325)

DRB 106A

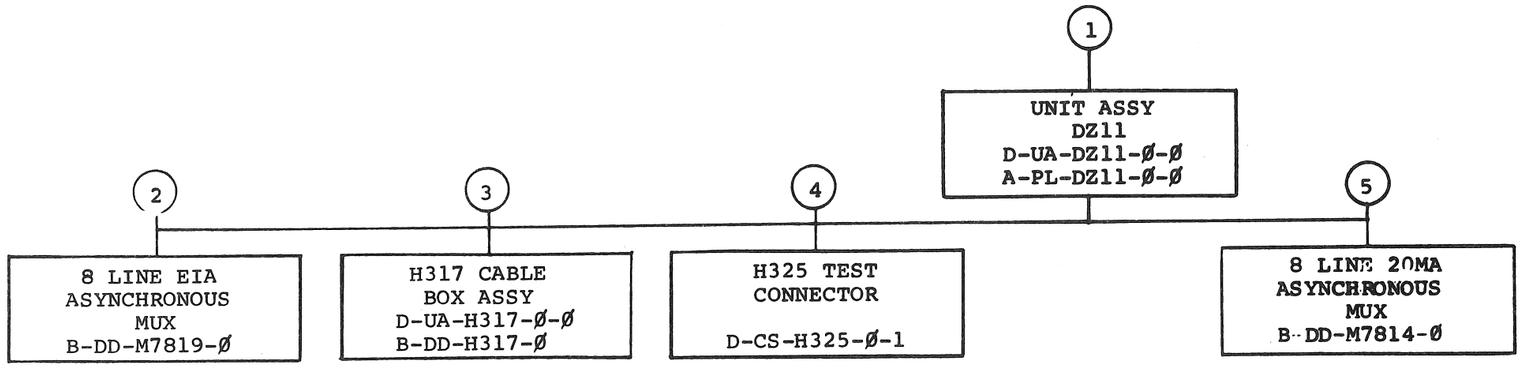

TITLE	SHEET	SIZE	CODE	NUMBER	REV
EIA ASYNCHRONOUS MUX DZ11	SHEET 2 OF 3	B	DD	DZ11-Ø	A

DRB 107
DEC 16-(325)-1062-3 N871

FIND NO.	DRAWING NO.	DESCRIPTION	TYPE
1	MPØØ132	DZ11 FIELD MAINTENANCE PRINT SET (VOL 1)	-
	MPØØ136	DZ11 FIELD MAINTENANCE PRINT SET (VOL 2)	-
			-
	B-TC-DZ11-Ø-6	DZ11 FIELD MAINTENANCE PRINT SET (TC) DZ11A, DZ11E	-
	B-TC-DZ11-Ø-1Ø	DZ11 FIELD MAINTENANCE PRINT SET (TC) DZ11B	-
			-
	D-UA-DZ11-Ø-Ø	UNIT ASSY DZ11	E/M
	A-PL-DZ11-Ø-Ø	EIA ASYNCHRONOUS MUX DZ11	E/M
	C-IA-H327-Ø-Ø	CONNECTOR, TURN AROUND	E/M
	D-IA-BCØ5W-Ø-Ø	5Ø CONDUCTOR SIGNAL CABLE (BCØ5W)	E/M
	C-MD-7414386-Ø-Ø	BRACKET, PANEL	M
	C-IA-BCO8S-Ø-Ø	40 CONDUCTOR SIGNAL CABLE (BCO8S)	E/M
	A-PL-DZ11-Ø-5	SHIPPING LIST	M
	D-BD-DZ11-Ø-8	SYSTEM CONNECT DIAGRAM	E
	MPØØ253	DZ11 FIELD MAINTENANCE PRINT SET (VOL 3)	-
	MPØØ254	DZ11 FIELD MAINTENANCE PRINT SET (VOL 4)	-
	B-TC-DZ11-Ø-11	DZ11 FIELD MAINTENANCE PRINT SET (TC)DZ11-C,DZ11-F	-
	B-TC-DZ11-Ø-12	DZ11 FIELD MAINTENANCE PRINT SET (TC) DZ11-D	-
	A-SP-DZ11-Ø-1	DZ11 TEST PROCEDURE	-
	A-SP-DZ11-Ø-2	DZ11 ACCEPTANCE PROCEDURE	-
	A-SP-DZ11-Ø-9	DZ11 ENGINEERING SPECIFICATION	-
2	B-DD-M7819-Ø	8 LINE EIA ASYNCHRONOUS MUX	E/M
3	D-UA-H317-Ø-Ø	H317 CABLE BOX ASSY	E/M
	B-DD-H317-Ø	H317 CABLE BOX ASSY	E
4	D-CS-H325-Ø-1	H325 TEST CONNECTOR	E/M
	K-CO-H325-Ø-4	X-Y COORDINATE HOLE LOCATION	M
	D-AH-H325-0-5	ASSY/DRILLING HOLE LAYOUT	M
	B-MH-H325-Ø-6	MODULE ECO HISTORY	E/M
5	B-DD-M7814-Ø	8 LINE 20 MA ASYNCRONOUS MUX	E/M

FIND NO.	DRAWING NO.	DESCRIPTION	TYPE

TYPE: E ELECTRICAL
M MECHANICAL
E/M ELECTRO/MECHANICAL

digital

TITLE	SHEET	SIZE	CODE	NUMBER	REV
EIA ASYNCHRONOUS MUX DZ11	3 OF 3	B	DD	DZ11-M	A

EN-01062-28-16-R972-1325

DRB 108A

DIGITAL EQUIPMENT CORPORATION
MAYNARD, MASSACHUSETTS

PARTS LIST

MADE BY K. DAVIS	CHECKED P. Coppolranco	SECTION
DATE 4 MAY 76	DATE 19 May 76	
ENG Robert A. Davies	PROD Tom McCabe	ISSUED SECT.
DATE 5-13-76	DATE 5-14-76	

ITEM NO.	DWG NO./PART NO.	DESCRIPTION	DZ11-A	DZ11-B	DZ11-E	DZ11-C	DZ11-D	DZ11-F						
1	D-UA-M7819-Ø-Ø	8 LINE EIA ASYNCHRONOUS MUX	1	1	2	-	-	-						
2	C-IA-H327-Ø-Ø	CONNECTOR, TURN AROUND	1	1	2	-	-	-						
3	D-IA-BCØ5W-15	5Ø CONDUCTOR SIGNAL CABLE (BCØ5W)	1	1	2	-	-	-						
4	EK-DZ11-MM-ØØ	MANUAL	1	-	1	1	-	1						
5	ZJ223-RB	DIAGNOSTIC SOFTWARE KIT	1	-	1	1	-	1						
6	B-TC-DZ11-Ø-6	DZ11-A & E PRINT SET	1	-	1	-	-	-						
7	B-TC-DZ11-Ø-10	DZ11-B PRINT SET	-	1	-	-	-	-						
8	D-CS-H325-Ø-1	H325 TEST CONNECTOR	1	-	1	-	-	-						
9	D-UA-H317-E-Ø	H317 CABLE BOX ASSY (EIA)	1	-	1	-	-	-						
10	MAINDEC-11-DXQLL	DEC/X11 LIBRARY *	1	-	1	1	-	1						
11	C-IA-BC08S-15	40 CONDUCTOR SIGNAL CABLE (BC08S)	-	-	-	1	1	2						
12	D-UA-H317-F-0	H317 CABLE BOX ASS (20 MA)	-	-	-	1	-	1						
13	B-TC-DZ11-0-11	DZ11-C & F PRINT SET	-	-	-	1	-	1						
14	B-TC-DZ11-0-12	DZ11-D PRINT SET	-	-	-	-	1	-						
15	D-UA-M7814-0-0	8 LINE 20MA ASYNCRONOUS MUX	-	-	-	1	1	2						
16	MAINDEC-11-DZDZB-REV-D	ITEP LISTING	1	-	1	-	-	-						
17	MAINDEC-11-DZDZB-REV-PB	ITEP OVERLAY TAPE	1	-	1	-	-	-						
		*THIS LIBRARY IS A BOOK THAT INCLUDES												
		THE DZ11 DEC/X11 SYSTEM EXERCISER												
		LISTING (MAINDEC-11-DXDZA-REV-D).												

TITLE	ASSY NO.	SIZE	CODE	NUMBER	REV.	ECO NO.
SHIPPING LIST DZ11	D-UA-DZ11-Ø-Ø	A	PL	DZ11-Ø-5	A	DZ11-00001
	SHEET 1 OF 1	DIST.				

DEC FORM DEC 16-(325)-1031 N870
DRA 110

* INDICATES NOT USED

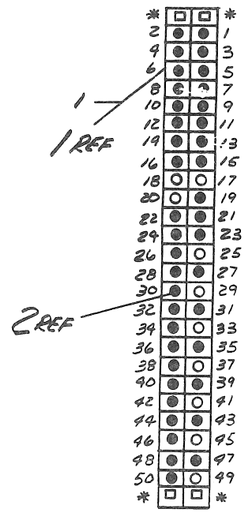

VIEW A-A
SCALE: NONE

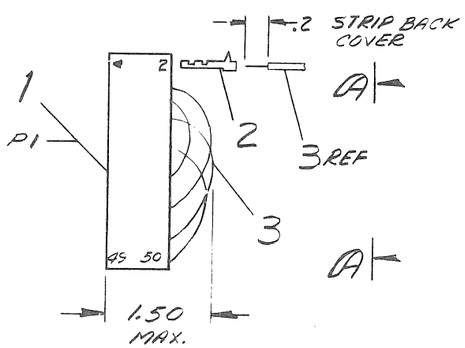

WIRE TABLE

ITEM NO	DESCRIPTION AWG	DESCRIPTION COLOR	FROM CONNECTION	FROM WITH	TO CONNECTION	TO WITH
3	#26	GRN	P1-1	#2	P1-4	#2
					P1-19	
			P1-3		P1-2	
					P1-23	
			P1-5		P1-8	
					P1-27	
			P1-7		P1-6	
					P1-31	
			P1-9		P1-12	
					P1-35	
			P1-11		P1-10	
					P1-39	
			P1-13		P1-16	
					P1-43	
			P1-15		P1-14	
					P1-47	
			P1-20		P1-26	
			P1-24		P1-22	
			P1-28		P1-34	
			P1-32		P1-30	
			P1-36		P1-42	
			P1-40		P1-38	
			P1-44		P1-50	
3	#26	GRN	P1-48	#2	P1-46	#2

ITEM NO.	DESCRIPTION	PART NO.	QTY.
A/R	WIRE #26 AWG (GRN)	9107636-55	3
40	SOCKET, CRIMP	1210089-04	2
1	HOUSING, SOCKET	1210918-10	1

PARTS LIST

FIRST USED ON OPTION/MODEL
DZ11

UNLESS OTHERWISE SPECIFIED
DIMENSION IN INCHES
TOLERANCES

DECIMALS	ANGLES
xxx .005	0 30'
xx .02	
x .1	

MATERIAL: SEE PARTS LIST

DRN.		DATE 3/20/75
CHK'D.		DATE
ENG.		DATE
PROJ. ENG.		DATE
PROD.		DATE

NEXT HIGHER ASSY.: D-IA-DZ11-Ø-Ø

SCALE: NONE

SHEET 1 OF 2

digital EQUIPMENT CORPORATION
MAYNARD, MASSACHUSETTS

TITLE: CONNECTOR, TURN AROUND

SIZE	CODE	NUMBER	REV.
C	IA	H327-Ø-Ø	

DIST

REV	CHANGE NO	CHK

REVISIONS

SIZE C CODE IA NUMBER H327-Ø-Ø REV

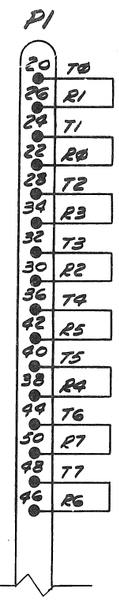

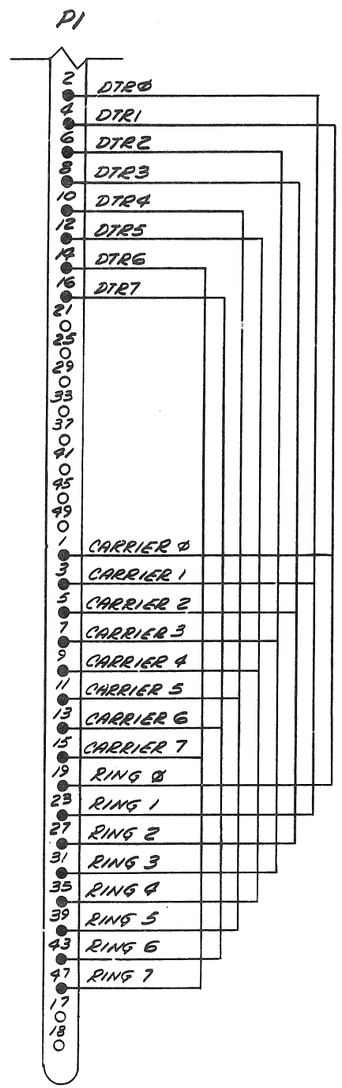

REVISIONS		
CHANGE NO		REV

FIRST USED ON OPTION/MODEL	QTY.	DESCRIPTION	PART NO.	ITEM NO.
DZ11		PARTS LIST		

UNLESS OTHERWISE SPECIFIED
DIMENSION IN INCHES
TOLERANCES

DECIMALS	ANGLES
.xxx = .005 .xx = .02 .x = .1	±0 30'

REMOVE BURRS AND BREAK SHARP CORNERS SURFACE QUALITY

MATERIAL —"—

FINISH —"—

DRN.		DATE 8/27/75
CHK'D.		DATE
ENG.		DATE
PROJ. ENG.		DATE
PROD.		DATE

digital EQUIPMENT CORPORATION
MAYNARD MASSACHUSETTS

TITLE
CONNECTOR, TURN AROUND

NEXT HIGHER ASSY.
D-UA-DZ11-0-0

SCALE: NONE
SHEET 2 OF 2

SIZE	CODE	NUMBER	REV.
C	IA	H327-0-0	

DIST.

SIZE	CODE	NUMBER	REV
C	IA	H327-0-0	

NOTES:

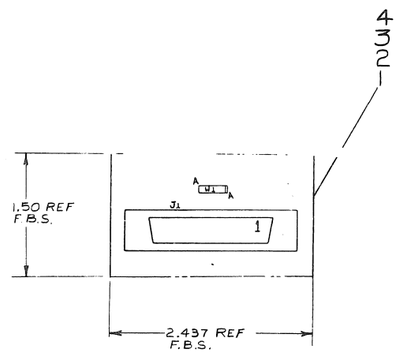

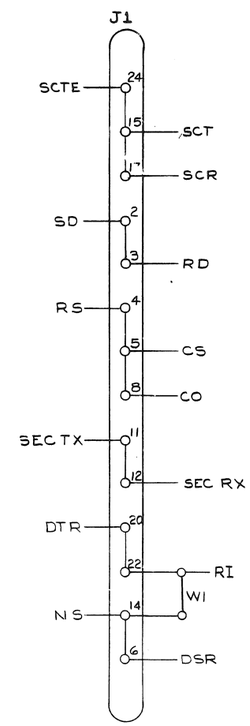

REF		X-Y COORDINATE HOLE LOC.	K-CO-H325-0-4	1
REF		ASSY/DRILLING HOLE LAYOUT	D-AH-H325-0-5	2
REF		MODULE ECO HISTORY	B-MH-H325-0-6	3
1		ETCHED CIRCUIT BOARD	5011698	4
1	J1	CONNECTOR	1210247	5
1	W1	INSULATED JUMPER WIRE	9009185	6

QTY | REF. DESIGNATION | DESCRIPTION | PART NO. | ITEM NO.

PARTS LIST

FIRST USED ON OPTION MODEL: DV11

ETCH BOARD REV. C

IC TYPE	GND	+5V
GND AND 5V ARE USUALLY PIN 7 AND 14 RESPECTIVELY EXCEPTIONS ARE STATED ABOVE		
IC PIN LOCATIONS		

REV.	CHANGE NO.	CHK.
A		
B	H325-0001	

REVISIONS

DEC NO.	EIA NO.	DEC NO.	EIA NO.

SEMICONDUCTOR CONVERSION CHART

DRN. DATE 4/23/75
CHKD. DATE 4/25/75
ENG. DATE 4/24/75
PROJ. ENG. DATE 4/24/75
PROD. DATE 4-24-75
NEXT HIGHER ASSY D-UA-C-M11-0-0
SCALE —
SHEET 1 OF

digital

TITLE H325 TEST CONNECTOR

SIZE	CODE	NUMBER	REV.
D	CS	H325-0-1	F

DIST.

DEC FORM NO. DRD 139.8

WIRE TABLE

ITEM NO.	DESCRIPTION AWG	COLOR	FROM CONNECTION	WITH	TO CONNECTION	WITH	REMARKS
3	22	BLK	P1-7 NOTE #4	4	P2-7 NOTE #4	4	
3		RED	P1-2	8	P2-3	8	
3		SHIELD	P1-1 NOTE #2 & 4	4 & 7	P2-1 NOTE #2	4 & 7	
3		BLK	P1-7 NOTE #4	4	P2-7 NOTE #4	4	
3		WHT	P1-3	8	P2-2	8	
3		SHIELD	P1-1 NOTE #2 & 4	4 & 7	P2-1 NOTE #2	4 & 7	
3		BLK	P1-6	8	P2-20	8	
3		GRN	P1-20	8	P2-6	8	
3	22	SHIELD	SEE NOTE #3	–	SEE NOTE #3	–	

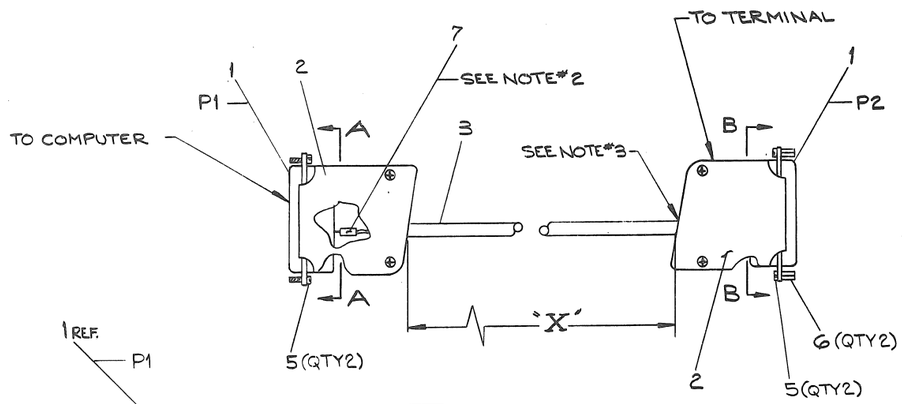

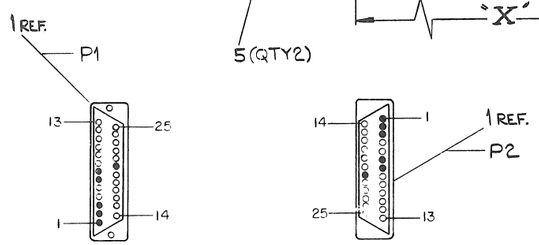

SECTION A-A
SCALE: NONE
(REAR VIEW)

SECTION B-B
SCALE: NONE
(REAR VIEW)

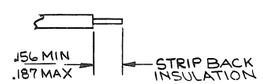

DETAIL-A
TYP. ALL WIRE ENDS

LEGEND

NUMBER	VARIATION DIM'S 'X'	REMARKS
BCØ3M-Ø1	1 FT.	PREASSEMBLED
BCØ3M-25	25 FT.	PREASSEMBLED
BCØ3M-AØ	100 FT.	PREASSEMBLED
BCØ3M-B5	250 FT.	PARTIALLY ASSEMBLED
BCØ3M-EØ	500 FT.	PARTIALLY ASSEMBLED
BCØ3M-LØ	1000 FT.	PARTIALLY ASSEMBLED
BCO3M-H5	750 FT.	PARTIALLY ASSEMBLED

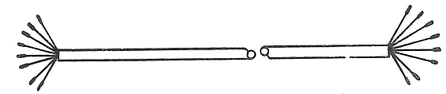

STEP #1
INSTALL ITEM #4, 7 AND 8 TO ITEM #3 (CABLE) PER WIRE TABLE

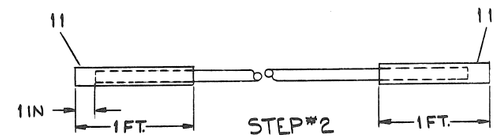

STEP #2
COVER BOTH ENDS WITH ITEM #11 (TUBING, HEAT SHRINK) PER ABOVE DIM'S

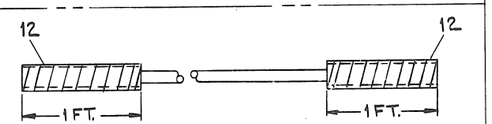

STEP #3
COVER BOTH ENDS WITH ITEM #12 (TAPE) PER ABOVE DIM'S

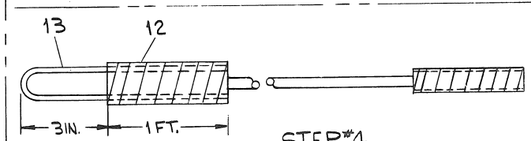

STEP #4
INSTALL ITEM #13 TO ITEM #3 BY USING ITEM #12 (TAPE). PER ABOVE DIM'S THE WIRE LOOP AT END OF CABLE IS USED TO PULL CABLE THREW CONDUIT, PIPE, AT INSTALLATION.

NOTES:

1. VARIATIONS AND LENGTHS SHOWN IN LEGEND ARE STANDARD AND ARE SPECIFIED BY NUMERIC DESIGNATION IN FOOT INCREMENTS, THE TOLERANCE ON DIMENSION "X" WILL BE ± 2% OF THE FOOT INCREMENT.
2. DRAIN WIRES TO BE ENCLOSED WITH ITEM #7 (TUBING) FROM END OF CABLE JACKET TO POINT WERE THEY ENTER CONTACT.
3. CUTBACK DRAIN WIRE TO OUTER INSULATION ON BOTH ENDS.
4. THERE ARE TWO WIRES INSTALLED IN EACH #18-20 GA CONTACT (ITEM #4)
5. USE INSERTION/EXTRACTION TOOL (ITEM #9) TO CONSTRUCT CABLE. THIS PIECE IS DISCARDED AFTER USE.
6. 1 FOOT, 25 FOOT AND 100 FOOT CABLES ARE PREASSEMBLED. ALL OTHERS ARE PARTIALLY ASSEMBLED.
7. STEPS 1 THRU 4 ARE FOR CABLE LENGTHS OVER 100 FT.

REFERENCE INFORMATION

USE CRIMP TOOL TYPE M22520/1-01 WITH TH185 LOCATOR

CABLES OVER 100 FT ARE TO BE STOCKED IN KIT FORM AS FOLLOWS PUT ITEMS 1, 2, 5, 6, 9 AND 1 (ONE) COPY OF THIS PRINT INTO PLASTIC BAG (ITEM #10) FOLD OVER CABLE (ITEM #3) AND STAPLE TOGETHER.

BCØ3M-H5	BCØ3M-LØ	BCØ3M-EØ	BCØ3M-B5	BCØ3M-AØ	BCØ3M-25	BCØ3M-Ø1	DESCRIPTION	DWG./PART NO.	ITEM NO.
A/R	A/R	A/R	A/R	–	–	–	WIRE #14 AWG (2 FT, 6 IN LG)	9107370-00	13
A/R	A/R	A/R	A/R	–	–	–	TAPE (ROLL)	9009507	12
A/R	A/R	A/R	A/R	–	–	–	TUBING (HEAT SHRINK)	9107252-00	11
1	1	1	1	–	–	–	BAG, PLASTIC	9905129-21	10
1	1	1	1	–	–	–	TOOL, INSERT/EXTRACT	4700024	9
8	8	8	8	8	8	8	SOCKET #22	1212583-0	8
A/R	A/R	A/R	A/R	A/R	A/R	A/R	TUBING #18 GA (NAT)	9107278-11	7
2	2	2	2	2	2	2	SPACER #4-40 X .25 LG.	9008496	6
4	4	4	4	4	4	4	SCR. RETAINER (MALE)	9009722	5
4	4	4	4	4	4	4	SOCKET #18-20	1212583-1	4
A/R	A/R	A/R	A/R	A/R	A/R	A/R	CABLE	9107723	3
2	2	2	2	2	2	2	HOOD	1210493-50	2
2	2	2	2	2	2	2	PLUG	1211354	1

QUANTITY & VARIATION

UNLESS OTHERWISE SPECIFIED DIMENSIONS ARE IN INCHES

ANGLES ±0° 30'	CLASS OF ACCURACY (CHECK ONE)	OVER 0 TO 0.2	OVER 0.2 TO 1.2	OVER 1.2 TO 4.0	OVER 4.0 TO 12.0	OVER 12.0 TO 40.0	OVER 40.0 TO 80.0
SURFACE QUALITY IN MICROINCHES	MEDIUM	±.004	±.008	±.012	±.016	±.024	±.04
	PREFERRED	±.012	±.016	±.025	±.04	±.063	±0.1

THIRD ANGLE PROJECTION

REMOVE BURRS AND BREAK SHARP CORNERS

DO NOT SCALE DWG

MATERIAL: SEE PARTS LIST

FINISH: —

DRN. 6-14-75
CHK. 6-14-75
ENG.
PROJ. ENG. 7-1-75
PROD. 11-13-75

NEXT HIGHER ASSY. —

SCALE 1/1

SHEET 1 OF 1

FIRST USED ON —

digital

TITLE: CORD, EXTENSION NULL MODEM

SIZE	CODE	NUMBER	REV.
D	1A	BCØ3M-0-0	

DIST.

REV.	CHANGE NO.	CHK.	
A	BCØ3M-00001		B. AMPSON 6-13-75
B	BCØ3M-00002		B. SAMPSON
C	BCØ3M-00003		R. SAMPSON 11-14-75

DEC FORM NO. DRD 100-C

WIRE TABLE

REF'S NO	DESCRIPTION AWG	DESCRIPTION COLOR	FROM CONNECTION	FROM WITH	TO CONNECTION	TO WITH
1	#22	BLK	P1-1	#4	P2-1	#4
1	#22	RED	P1-2	#4	P2-3	#4
1	#22	GRN	P1-3	#4	P2-2	#4
6	#26	GRN	P1-4	#5	P1-5	#4
1	#22	BLU			P2-8	#4
1	#22	YEL	P1-7	#4	P2-7	#4
1	#22	VIO	P1-8	#4	P2-4	#5
6	#26	GRN	P2-5	#4		
1	#22	GRY	P1-20	#4	P2-6	#5
6	#26	GRN	P2-22	#4		
1	#22	ORN	P1-6	#5	P2-20	#4
6	#26	GRN			P1-22	#4
* 1	#22	BRN	P1-15	#5	P2-17	#4
* 6	#26	GRN			P1-24	#4
* 1	#22	WHT	P1-17	#4	P2-15	#5
* 6	#26	GRN	P2-24	#4		

LEGEND

NUMBER	VARIATION DIM "X"	VARIATION DIM "Y" REF
BC03P-2	2 FT ± 1 IN.	2FT 1 IN ± 1 IN
BC03P-25	25FT ± 3 IN	25FT. 1 IN. ± 3 IN
BC03P-50	50FT ± 10 IN	50FT 1 IN ± 10 IN
BC03P-A0	100FT ± 20 IN	100FT 1 IN ± 20 IN

NOTES:

1. DO NOT USE LONG BC03P CABLES BETWEEN SYNCHRONOUS DEVICES BECAUSE THE UNSHIELDED TIMING LEADS (PIN 15 AND 17) CAN CAUSE CROSSTALK. THE BC03P-2 IS BEST FOR THIS TYPE OF APPLICATION.
2. CABLE (ITEM #1) TO GO INSIDE HOOD (ITEM #3) AT LEAST .50 AND WIRES SHOULD BE APPROXIMATELY 1.38 IN. IN LENGTH, SO THEY DON'T BUNCH INSIDE HOOD.

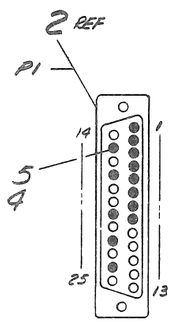

VIEW A-A
WITH HOOD REMOVED
SCALE: NONE

* SEE NOTE #1

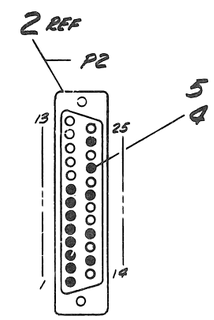

VIEW B-B
WITH HOOD REMOVED
SCALE: NONE

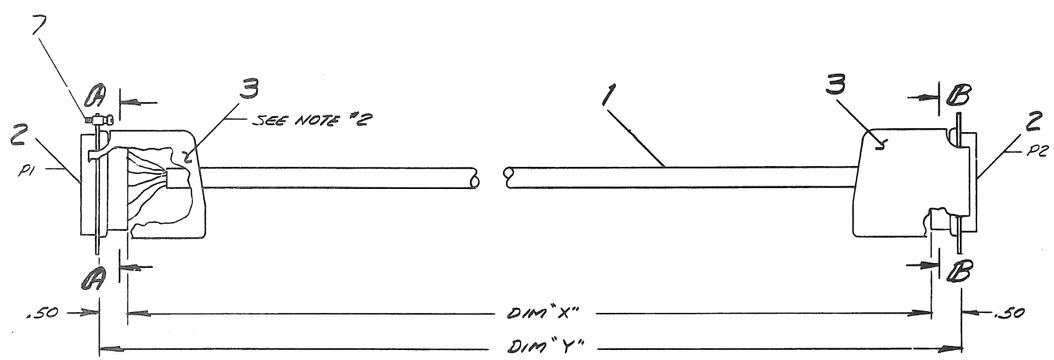

4	SCREW, CAPTIVE ASSY	9009722	7
A/R	WIRE #26 AWG (GRN)	9107636-55	6
4	SOCKET, CRIMP	1210493-49	5
20	SOCKET, CRIMP	1210493-41	4
2	HOOD & STRAIN RELIEF	1210493-50	3
2	SHELL & INSERT	1210493-32	2
A/R	CABLE, (10 CONDUCTOR)	9107623	1
	DESCRIPTION	DWG./PART NO.	ITEM NO.

UNLESS OTHERWISE SPECIFIED DIMENSIONS ARE IN INCHES

ANGLES ±0° 30'	CLASS OF ACCURACY (CHECK ONE)	OVER 0 TO 0.2	OVER 0.2 TO 1.2	OVER 1.2 TO 4.0	OVER 4.0 TO 12.0	OVER 12.0 TO 40.0	OVER 40.0 TO 80.0
SURFACE QUALITY IN MICROINCHES	MEDIUM	±.004	±.008	±.012	±.016	±.024	±.04
	PREFERRED	±.012	±.016	±.025	±.04	±.063	±0.1

QUANTITY & VARIATION

THIRD ANGLE PROJECTION

REMOVE BURRS AND BREAK SHARP CORNERS

DO NOT SCALE DWG

MATERIAL: SEE PARTS LIST

FINISH: —

DRN. 8/23/75
CHK'D. 12-3-75
ENG. 12/4/75
PROJ. ENG. 12-3-75
PROD. 12-3-75

NEXT HIGHER ASSY.

SCALE 1/1

SHEET 1 OF 2

FIRST USED ON DZ11

digital

TITLE: NULL MODEM CABLE ASSY.

SIZE D | CODE IA | NUMBER BC03P-0-0 | REV. A

DIST.

REVISIONS			
CHK	CHANGE NO.	REV.	
TR	BC03P-0-0	A	

DEC FORM NO. DRD 100-C

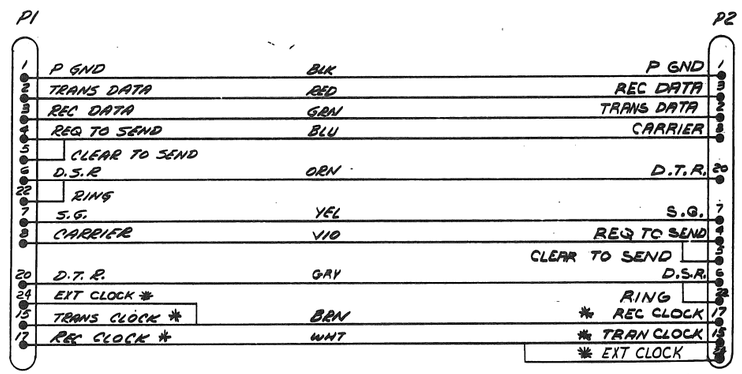

* SEE NOTE *1

REVISIONS		
CHK	CHANGE NO	REV

TITLE	SIZE	CODE	NUMBER	REV.
NULL MODEM CABLE ASSY	D	IA	BCØ3P-Ø-Ø	A
SCALE NONE	SHEET 2 OF 2	DIST.		