"THE MATERIAL HEREIN IS FOR INFORMATION PURPOSES ONLY AND IS SUBJECT TO CHANGE WITHOUT NOTICE. DIGITAL EQUIPMENT CORPORATION ASSUMES NO RESPONSIBILITY FOR ANY ERRORS WHICH MAY APPEAR HEREIN."

FIELD MAINTENANCE PRINT SET

"THIS DRAWING AND SPECIFICATIONS, HEREIN, ARE THE PROPERTY OF DIGITAL EQUIPMENT CORPORATION AND SHALL NOT BE REPRODUCED OR COPIED OR USED IN WHOLE OR IN PART AS THE BASIS FOR THE MANUFACTURE OR SALE OF ITEMS WITHOUT WRITTEN PERMISSION. COPYRIGHT © 1976, DIGITAL EQUIPMENT CORPORATION."

TABLE OF CONTENTS

FIELD MAINTENANCE PRINT SET DL11-W	B-TC-DL11-W-1
SERIAL LINE/LINE CLOCK	A-PL-DL11-W-Ø
SLU/RTC OPTION	D-CS-M7856-Ø-1
SLU/RTC OPTION	K-CS-M7856-Ø-9
CABLE ASSY (KL8-E)	D-IA-7008360-0-0
CABLE MODEM BCØ5C	D-UA-BCØ5C-Ø-Ø
CABLE ASSY	D-UA-BC03L-0-0

UNIT VARIATIONS COVERED BY THIS PRINT SET
DL11-W
DL11-WA
DL11-WB
DL11-WC

DL11-W

Field Maintenance Print Set

Digital Equipment Corporation

PRINT SET ORDER NO.
MPØØ1Ø6

REVISIONS		
DATE	CHG. NO.	REV.
NOV-76	DL11W-1	A

USED ON OPTION/MODEL

SHEET I OF 1

DRN. D. Neary	DATE 26MAR76	digital
CHK'D D. Neary	DATE 26MAR 76	TITLE: FIELD MAINTENANCE PRINT SET DL11-W
PROJ. ENG. R.E. Pratt	DATE 29-MAR 1976	SIZE B / CODE TC / NUMBER DL11-W-1 / REV. A
FIELD SERV. C.M. Evans	DATE 14-April 1976	DIST.

EN-01124-16-N675-(327)

DRB 124

DIGITAL EQUIPMENT CORPORATION
MAYNARD, MASSACHUSETTS

PARTS LIST

MADE BY D. HEALY	CHECKED D. HEALY	SECTION 1
DATE 25 MAR 76	DATE 25 MAR 76	
ENG RB Craft	PROD K J. MacDonald	ISSUED SECT. 1
DATE 1-APR-76	DATE 7 APR 76	

ITEM NO.	DWG NO./PART NO.	DESCRIPTION	QUANTITY/VARIATION DL11-W	DL11-WA	DL11-WB	DL11-WC
1	D-CS-M7856-Ø-1	SLU/RTC OPTION	1	1	1	1
2	D-IA-7008360-1-0	CABLE ASSY (KL8-E)	-	1	-	-
3	D-UA-BCØ5C-25-0	CABLE MODEM BCØ5C	-	-	1	-
4	D-UA-BC03L-10-0	CABLE ASSY	-	-	-	1

TITLE SERIAL LINE/LINE CLOCK DL11-W	ASSY NO. NONE	SIZE A	CODE PL	NUMBER DL11-W-Ø	REV. A
	SHEET 1 OF 1	DIST.			ECO NO. DL11W 00001

DEC FORM DEC 16-(325) 1031-N870
DRA 110

"THIS DRAWING AND SPECIFICATION, DESIGN OR THE PROPERTY OF DIGITAL EQUIPMENT CORPORATION AND SHALL NOT BE REPRODUCED OR COPIED OR USED IN WHOLE OR IN PART AS THE BASIS FOR THE MANUFACTURE OR SALE OF ITEMS WITHOUT WRITTEN PERMISSION.
COPYRIGHT © 1975 DIGITAL EQUIPMENT CORPORATION"

NOTES:

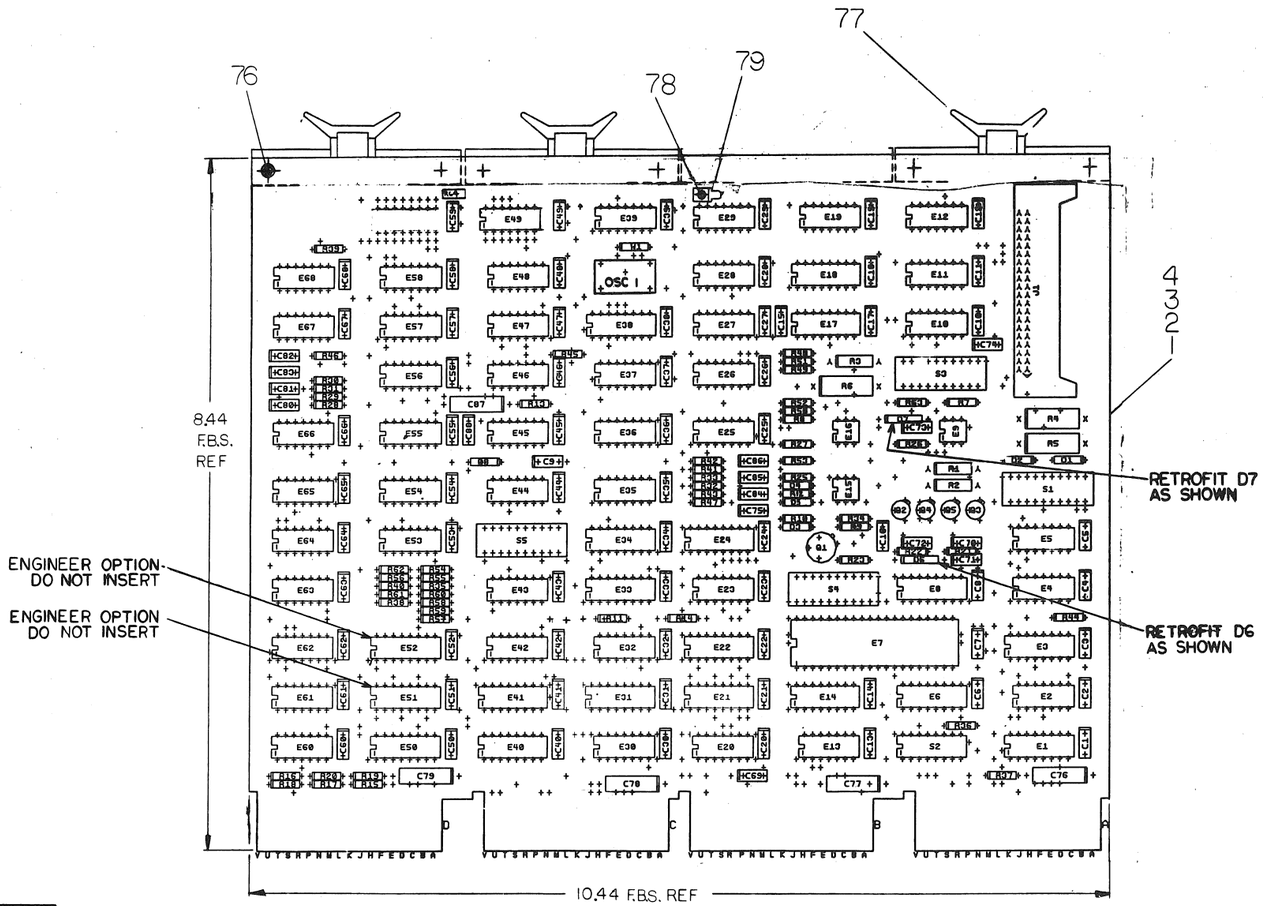

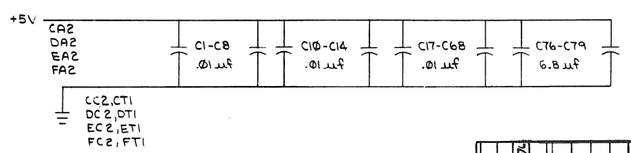

IC 384	1	8	
IC 8837	8	16	
IC 314A	1	8	
IC 74123	8	16	
IC 74157	8	16	
IC 74153	8	16	
IC 7493	10	5	
IC 7492	10	5	
IC 74151	8	16	
IC 74175	8	16	
IC UART	1	3	
IC 8097	8	16	
IC 8641	8	16	
IC TYPE	GND	+5V	

GND AND 5V ARE USUALLY PIN 7 AND 14 RESPECTIVELY EXCEPTIONS ARE STATED ABOVE

IC PIN LOCATIONS

QTY	REF. DESIGNATION	DESCRIPTION	PART NO.	ITEM NO.
REF		X-Y COORDINATE HOLE LOCATION	K-CO-M7856-0-4	1
REF		ASSY/DRILLING HOLE LAYOUT	D-AH-M7856-0-5	2
REF		MODULE ECO HISTORY	B-MH-M7856-0-6	3
1		ETCHED CIRCUIT BOARD	5011464	4
67	C1 THRU C8,C10 THRU C15, C17 THRU C68,C80	CAPACITOR, .01uf, 100V, 20%	1001610-01	5
7	C9,C80 THRU C74	CAPACITOR, 470pf, 100V, 5%	1000024	6
1	C75	CAPACITOR, 330pf, 100V, 5%	1000023	7
6	C80 THRU C85	CAPACITOR, 82pf, 100V, 5%	1000015	8
1	C86	CAPACITOR, 150pf, 100V, 5%	1000019	9
1	C87	CAPACITOR, 2.2uf, 20V, 10%	1002627	10
4	C76,C77,C78,C79	CAPACITOR, 6.8uf, 35V, 10%	1005306	11
1	C16	CAPACITOR, 5000pf, 100V, 20%	1001765	12
3	D1,D2,D3	DIODE, IN4001	1105796	13
1	D4	DIODE, ZENER IN4742	1109502	14
2	D6,D7	DIODE, CURRENT LIMITER MCL1301	1105610	15
1	D8	DIODE, D664	1100114	16
4	S1,S3,S4,S5	SWITCH, 10 POSITION	1211164-06	17
1	S2	SWITCH, 8 POSITION	1211164-04	18
				19
				20
1	J1	CONNECTOR, 40 PIN	1209941	21
1	R83	RESISTOR, 330, 1/4W, 5%	1300295	22
3	R1,R2,R3	RESISTOR, 180 OHM, 1/2W, 5%	1300260	23
3	R4,R5,R6	RESISTOR, 560 OHM, 1W, 5%	1303048	24
2	R7,R8	RESISTOR, 68K, 1/4W, 5%	1301327	25
1	R9	RESISTOR, 33 OHM, 1/4W, 5%	1300197	26
1	R10	RESISTOR, 120K, 1/4W, 5%	1300539	27
1	R12	RESISTOR,680, 1/4W, 5%	1301424	28
1	R25	RESISTOR, 68 OHM, 1/4W, 5%	1300219	29
2	R13,R14	RESISTOR, 100 OHM, 1/4W, 5%	1300229	30
4	R15,R16,R17,R18	RESISTOR, 180 OHM, 1/4W, 5%	1301322	31
4	R19,R20,R21,R22	RESISTOR, 390 OHM, 1/4W, 5%	1300309	32
1	R23	RESISTOR, 7.5K, 1/4W, 5%	1301422	33
2	R27, R26	RESISTOR, 150 OHM, 1/4W, 5%	1300250	34
6	R28 THRU R33	RESISTOR, 270 OHM, 1/4W, 5%	1301972	35
27	R35,R36,R37,R39 THRU R62	RESISTOR, 10K, 1/4W, 5%	1300479	36
3	R11,R64,R38,	RESISTOR, 1K, 1/4W, 5%	1300365	37
1	R34	RESISTOR, 220 OHM, 1/4W, 5%	1300271	38
1	Q1	TRANSISTOR, DEC 6531B	1509338	39
2	Q3,Q4	TRANSISTOR, A05	1510705	40
2	Q2,Q5	TRANSISTOR, A55	1510706	41
2	E9,E16	OPTICALLY COUPLED ISOLATOR	1510727-1	42
1	OSC 1	OSCILLATOR 50688 MHZ	1811660-02	43
1	E15	I.C. DEC 4N26	1911998	44
3	E1,E6,E14	I.C. DEC 8641	1911579	45
6	E2,E13,E20,E60,E61,E49	I.C. DEC 8881	1909705	46
1	E3	I.C. DEC 8097	1911527	47
3	E4,E44,E64	I.C. DEC 7408	1910155	48
7	E5,E35,E37,E55,E57,E63,E68	I.C. DEC 7474	1905547	49
1	E7	I.C. DEC UART(1808)	1910459-01	50
1	E8	I.C. DEC 74175	1910651	51
1	E10	I.C. C 1489L	1910323	52
1	E11	I.C. DEC 1488L	1910322	53
2	E17,E18	I.C. DEC 74151	1909936	54

PARTS LIST

FIRST USED ON OPTION MODEL

ETCH BOARD REV. D

DEC NO.	EIA NO.	DEC NO.	EIA NO.

SEMICONDUCTOR CONVERSION CHART

REV.	CHANGE NO.	CHK	
D	M7856-00001	ECO	H. Nystrom 2-2-76 B. PRATT
E	M7856-00002	ECO	Robert Pratt 2-10-76 B. PRATT

REVISIONS

DRN H. Hallen DATE 9/2/75
CHK'D. [illegible] DATE 9-9-75
ENG. R. Pratt DATE 11-24-75
PROJ. ENG. R.B. Pratt DATE 11-24-75
PROD. R.O. Wardrobe DATE 11-25-75
NEXT HIGHER ASSY
SCALE —
SHEET 1 OF 9

digital

TITLE SLU/RTC OPTION

SIZE D CODE CS NUMBER M7856-0-1 REV. E

DIST.

DEC FORM NO. DRD 135.8

"THIS DRAWING AND SPECIFICATIONS, HEREIN, ARE THE PROPERTY OF DIGITAL EQUIPMENT CORPORATION AND SHALL NOT BE REPRODUCED OR COPIED OR USED IN WHOLE OR IN PART AS THE BASIS FOR THE MANUFACTURE OR SALE OF ITEMS WITHOUT WRITTEN PERMISSION.
COPYRIGHT ©1975 DIGITAL EQUIPMENT CORPORATION"

1	E12	I.C. DEC 7492	1909053	55
5	E18,E26,E27,E28,E39	I.C. DEC 7493	1909054	56
1	E21	I.C. DEC 74153	1909937	57
2	E22,E38	I.C. DEC 74157	1910655	58
5	E23,E53,E58,E62,E36	I.C. DEC 7402	1909004	59
1	E24	I.C. DEC 74123	1910436	60
1	E25	I.C. DEC 7437	1910091	61
1	E29	I.C. DEC 7486	1910011	62
1	E30	I.C. DEC 314A	1909704	63
4	E31,E40,E41,E50	I.C. DEC 8837	1911116	64
1	E32	I.C. DEC 7410	1905576	65
2	E42,E43	I.C. DEC 8242	1909712	66
2	E45,E66	I.C. DEC 7414	1911324	67
4	E46,E54,E65,E67	I.C. DEC 7400	1905575	68
1	E47	I.C. DEC 74197	1910035	69
1	E48	I.C. DEC 384	1909486	70
1	E56	I.C. DEC 7404	1909686	71
1	E59	I.C. SPARE		72
1	E33	32 × 8 PROM	23095A1	73
1	E34	32 × 8 PROM	23094A1	74
1	W1	JUMPER, INSULATED	9009185	75
6		EYELET (HANDLE)	9006732	76
3		HANDLE, FLIP-CHIP (MAGENTA)	9008337-6	77
1		EYELET GS4-5	9009000	78
1		FASTON TAB (OFFSET)	9007112	79
1		TERMINAL	9007791	80
1	D5	DIODE IN746A	1104860	81

REVISIONS		
CHK	CHANGE NO	REV.

TITLE	SIZE	CODE	NUMBER	REV.
SLU/RTC OPTION	D	CS	M7856-0-1	E
SCALE —	SHEET 2 OF 9	DIST.		

"THIS DRAWING AND SPECIFICATIONS, HEREIN, ARE THE PROPERTY OF DIGITAL EQUIPMENT CORPORATION AND SHALL NOT BE REPRODUCED OR COPIED OR USED IN WHOLE OR IN PART AS THE BASIS FOR THE MANUFACTURE OR SALE OF ITEMS WITHOUT WRITTEN PERMISSION. COPYRIGHT © 1975 DIGITAL EQUIPMENT CORPORATION"

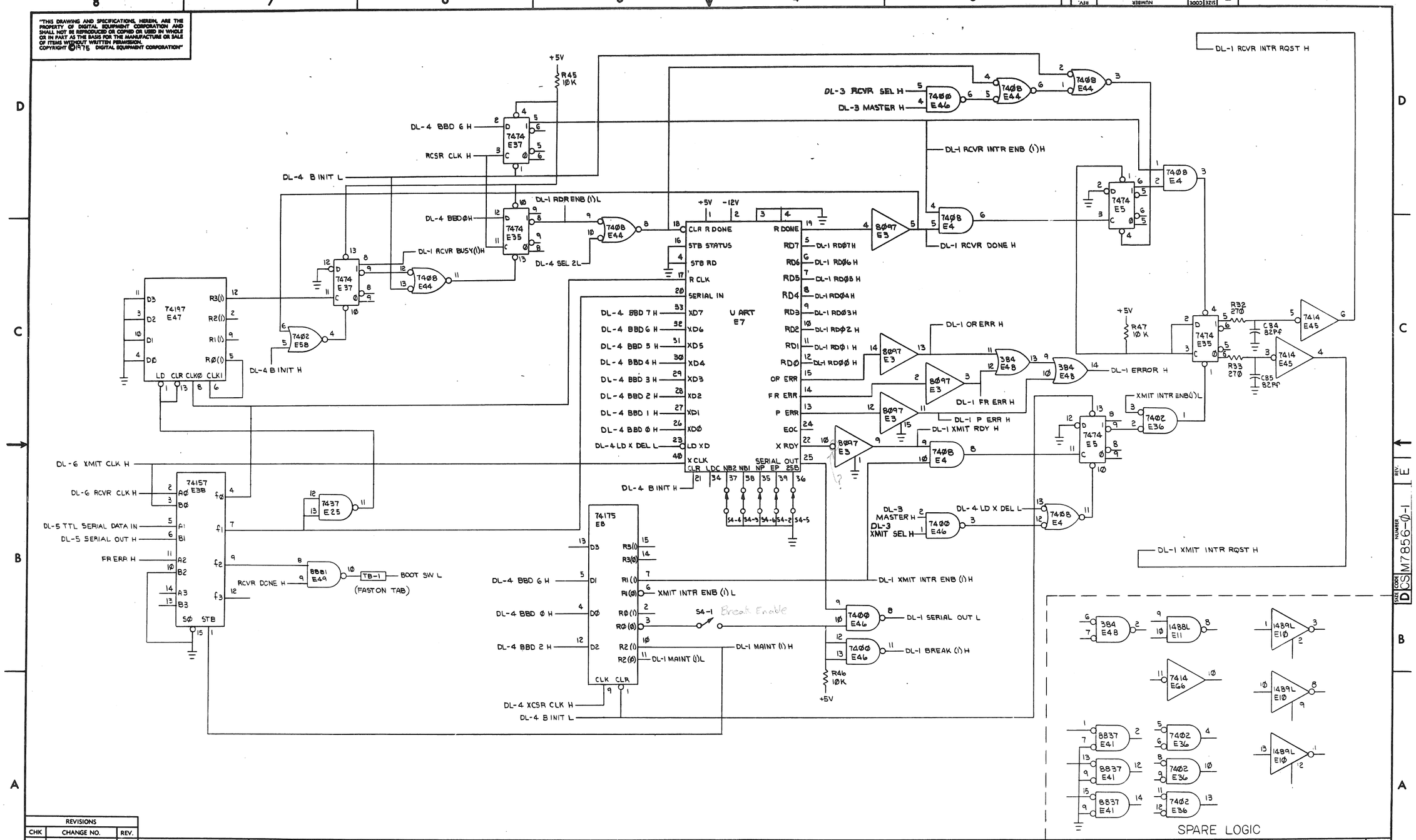

REVISIONS		
CHK	CHANGE NO.	REV.

TITLE	SIZE	CODE	NUMBER	REV.
SLU/RTC OPTION (DL-1)	D	CS	M7856-0-1	E
SCALE —	SHEET 3 OF 9	DIST.		

DEC FORM NO. DRD 138

"THIS DRAWING AND SPECIFICATIONS, HEREIN, ARE THE PROPERTY OF DIGITAL EQUIPMENT CORPORATION AND SHALL NOT BE REPRODUCED OR COPIED OR USED IN WHOLE OR IN PART AS THE BASIS FOR THE MANUFACTURE OR SALE OF ITEMS WITHOUT WRITTEN PERMISSION.
COPYRIGHT © 1975 DIGITAL EQUIPMENT CORPORATION"

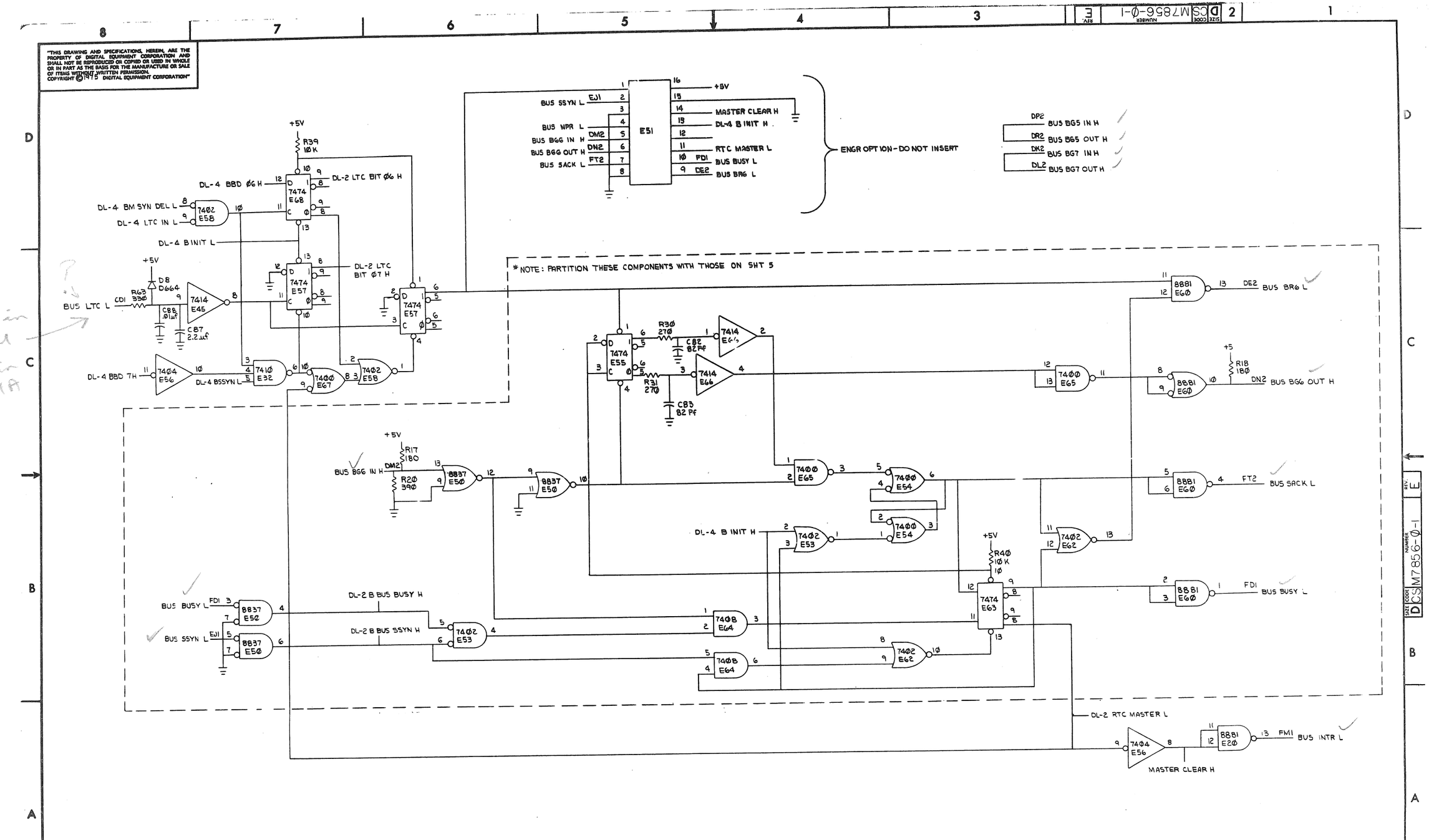

REVISIONS		
CHK	CHANGE NO.	REV.

TITLE	SIZE	CODE	NUMBER	REV.
SLU/RTC OPTION (DL-2)	D	CS	M7856-Ø-1	E
SCALE —	SHEET 4 OF 9	DIST.		

DEC FORM NO. DRD 138

"THIS DRAWING AND SPECIFICATIONS, HEREIN, ARE THE PROPERTY OF DIGITAL EQUIPMENT CORPORATION AND SHALL NOT BE REPRODUCED OR COPIED OR USED IN WHOLE OR IN PART AS THE BASIS FOR THE MANUFACTURE OR SALE OF ITEMS WITHOUT WRITTEN PERMISSION. COPYRIGHT © 1975 DIGITAL EQUIPMENT CORPORATION"

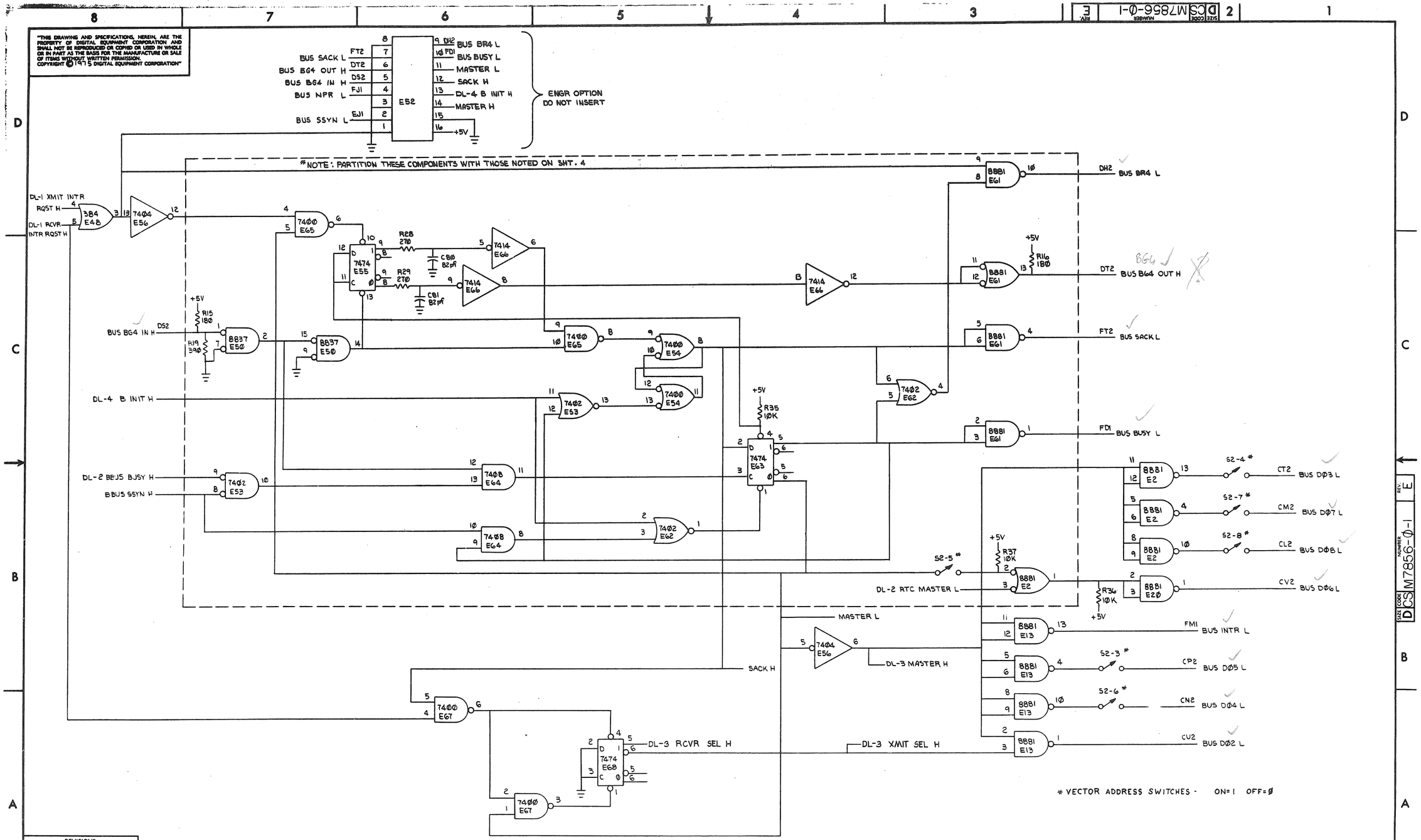

REVISIONS		
CHK	CHANGE NO.	REV.

TITLE	SIZE	CODE	NUMBER	REV.
SLU/RTC OPTION (DL-3)	D	CS	M7856-0-1	E
SCALE —	SHEET 5 OF 9	DIST.		

DEC FORM NO. DRD 138

"THIS DRAWING AND SPECIFICATIONS, HEREIN, ARE THE PROPERTY OF DIGITAL EQUIPMENT CORPORATION AND SHALL NOT BE REPRODUCED OR COPIED OR USED IN WHOLE OR IN PART AS THE BASIS FOR THE MANUFACTURE OR SALE OF ITEMS WITHOUT WRITTEN PERMISSION. COPYRIGHT © 1975 DIGITAL EQUIPMENT CORPORATION"

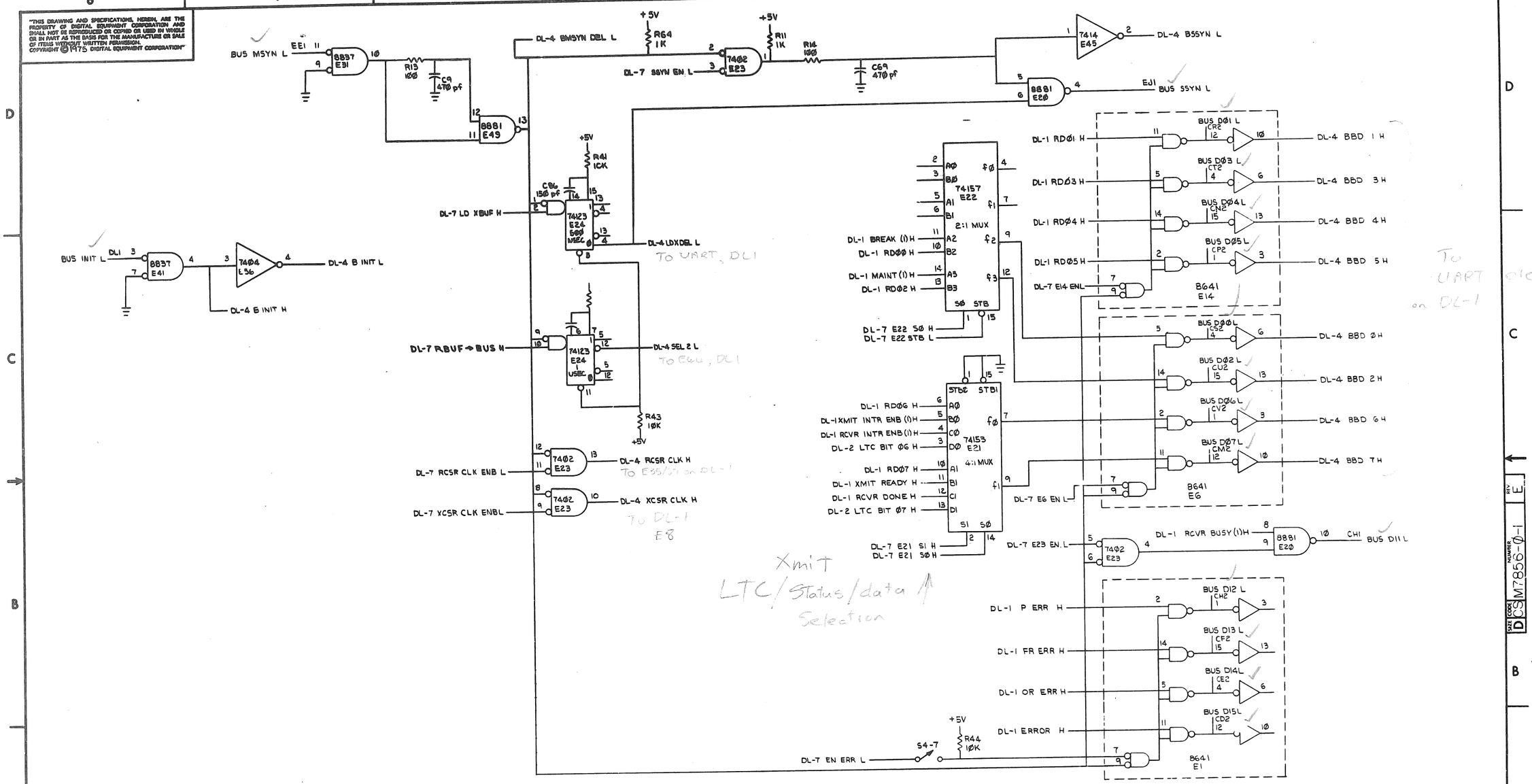

REVISIONS		
CHK	CHANGE NO.	REV.

TITLE	SIZE	CODE	NUMBER	REV.
SLU/RTC OPTION (DL-4)	D	CS	M7856-0-1	E
SCALE —	SHEET 6 OF 9	DIST.		

DEC FORM NO. DRD 138

"THIS DRAWING AND SPECIFICATIONS, HEREIN, ARE THE PROPERTY OF DIGITAL EQUIPMENT CORPORATION AND SHALL NOT BE REPRODUCED OR COPIED OR USED IN WHOLE OR IN PART AS THE BASIS FOR THE MANUFACTURE OR SALE OF ITEMS WITHOUT WRITTEN PERMISSION.
COPYRIGHT © 1975 DIGITAL EQUIPMENT CORPORATION"

NOTE:
1. SWITCHES ARE SHOWN IN ACTIVE MODE.
2. D7, D6 ARE MCL13Ø1 1 MA CONSTANT CURRENT DIODES.

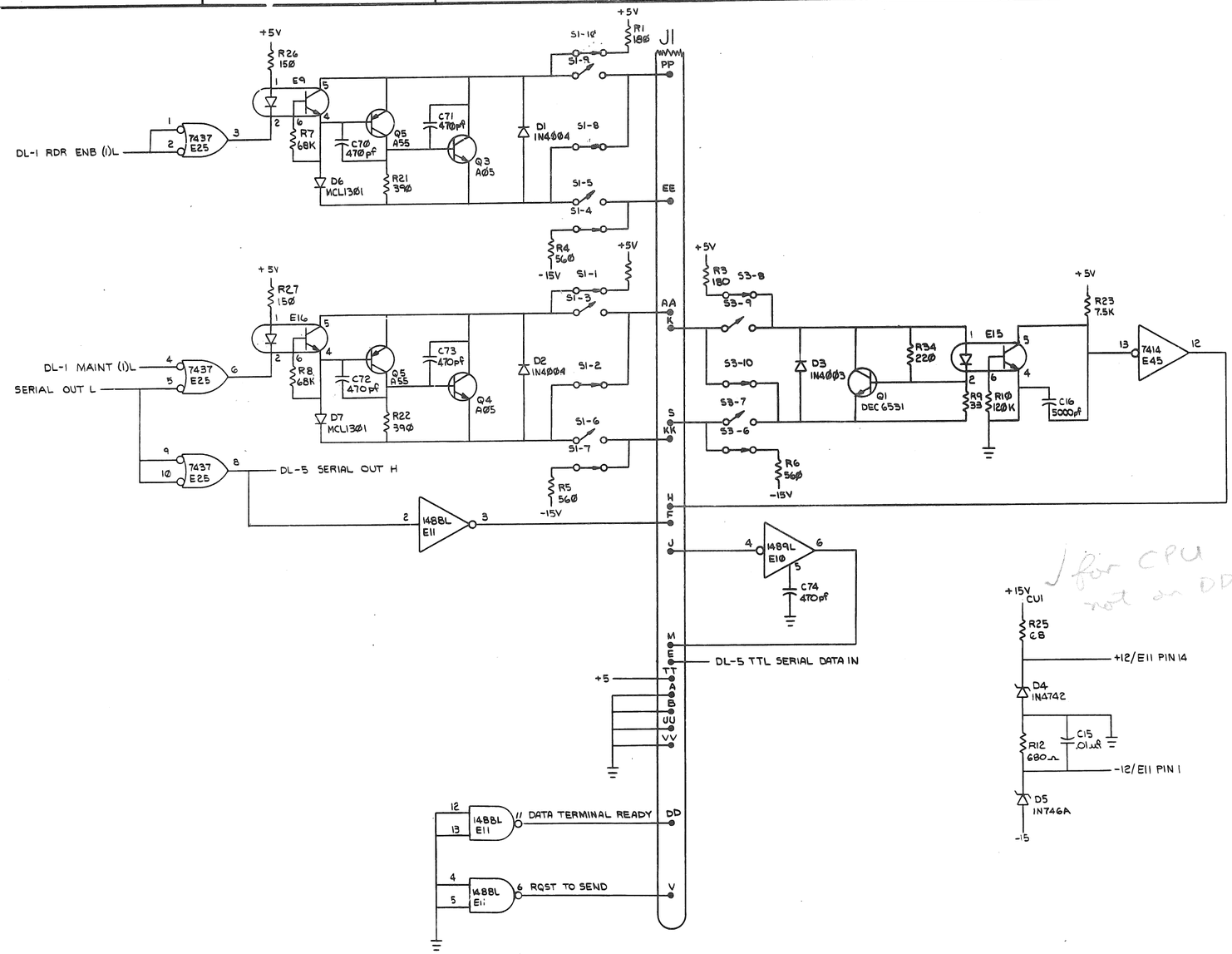

J for CPU
not on DD11A

Interface

REVISIONS		
CHK	CHANGE NO.	REV.

TITLE: SLU/RTC OPTION (DL-5)
SIZE: D CODE: CS NUMBER: M7856-Ø-1 REV: E
SCALE: — SHEET 7 OF 9 DIST.

DEC FORM NO. DRD 138

"THIS DRAWING AND SPECIFICATIONS, HEREIN, ARE THE PROPERTY OF DIGITAL EQUIPMENT CORPORATION AND SHALL NOT BE REPRODUCED OR COPIED OR USED IN WHOLE OR IN PART AS THE BASIS FOR THE MANUFACTURE OR SALE OF ITEMS WITHOUT WRITTEN PERMISSION. COPYRIGHT © 1975 DIGITAL EQUIPMENT CORPORATION"

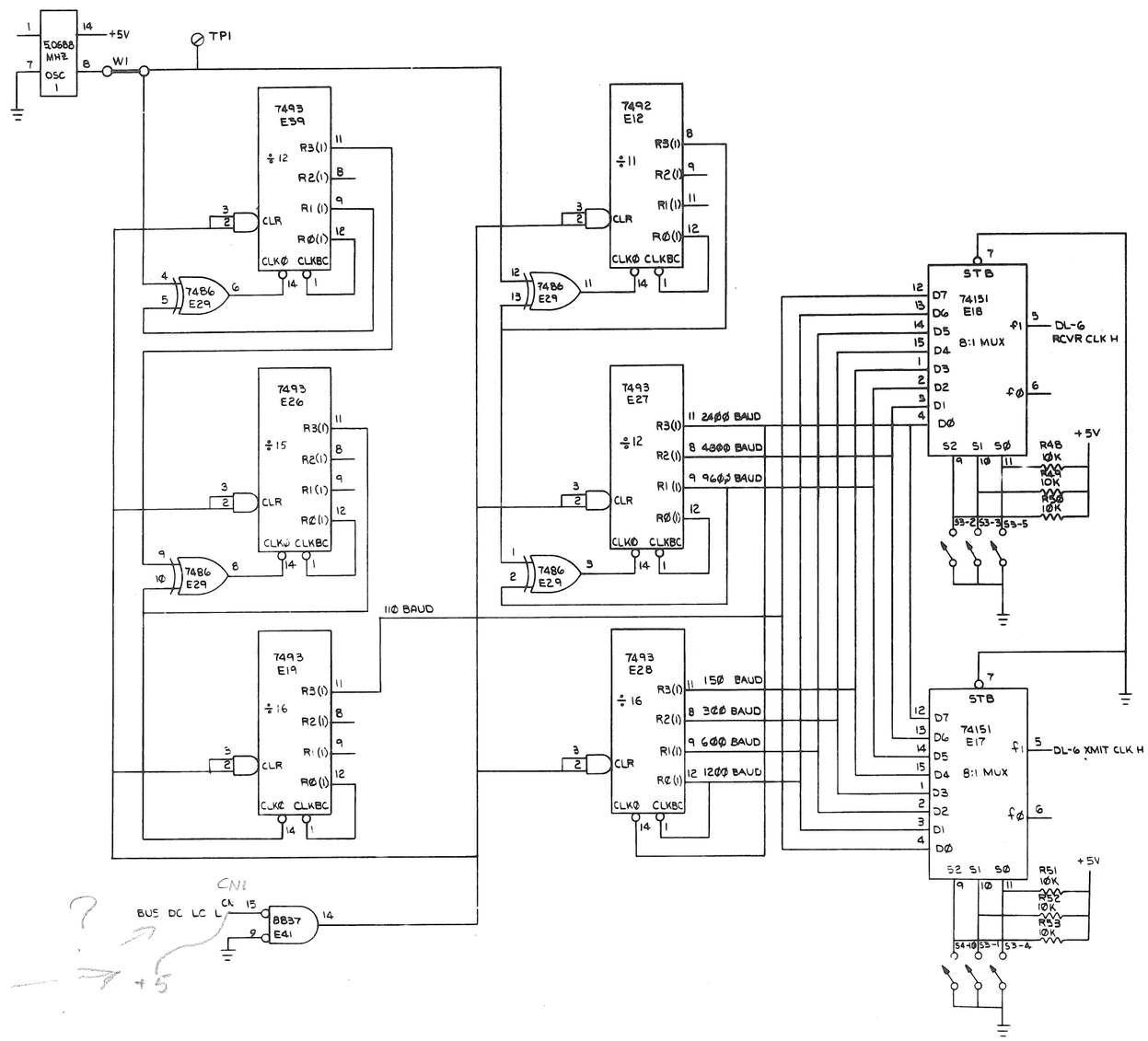

BAUD RATE	RCVR S3-2	RCVR S3-3	RCVR S3-5	XMIT S4-10	XMIT S3-1	XMIT S3-4
110	OFF	OFF	OFF	ON	ON	ON
150	ON	OFF	OFF	OFF	ON	ON
300	OFF	ON	ON	ON	OFF	OFF
600	OFF	ON	OFF	ON	OFF	ON
1200	OFF	OFF	ON	ON	ON	OFF
2400	ON	ON	ON	OFF	OFF	OFF
4800	ON	ON	OFF	OFF	OFF	ON
9600	ON	OFF	ON	OFF	ON	OFF

REVISIONS		
CHK	CHANGE NO	REV.

TITLE	SIZE	CODE	NUMBER	REV.
SLU/RTC OPTION (DL-6)	D	CS	M7856-0-1	E
SCALE —	SHEET 8 OF 9	DIST.		

DEC FORM NO. ORD 130

"THIS DRAWING AND SPECIFICATIONS, HEREIN, ARE THE PROPERTY OF DIGITAL EQUIPMENT CORPORATION AND SHALL NOT BE REPRODUCED OR COPIED OR USED IN WHOLE OR IN PART AS THE BASIS FOR THE MANUFACTURE OR SALE OF ITEMS WITHOUT WRITTEN PERMISSION.
COPYRIGHT © 1975 DIGITAL EQUIPMENT CORPORATION"

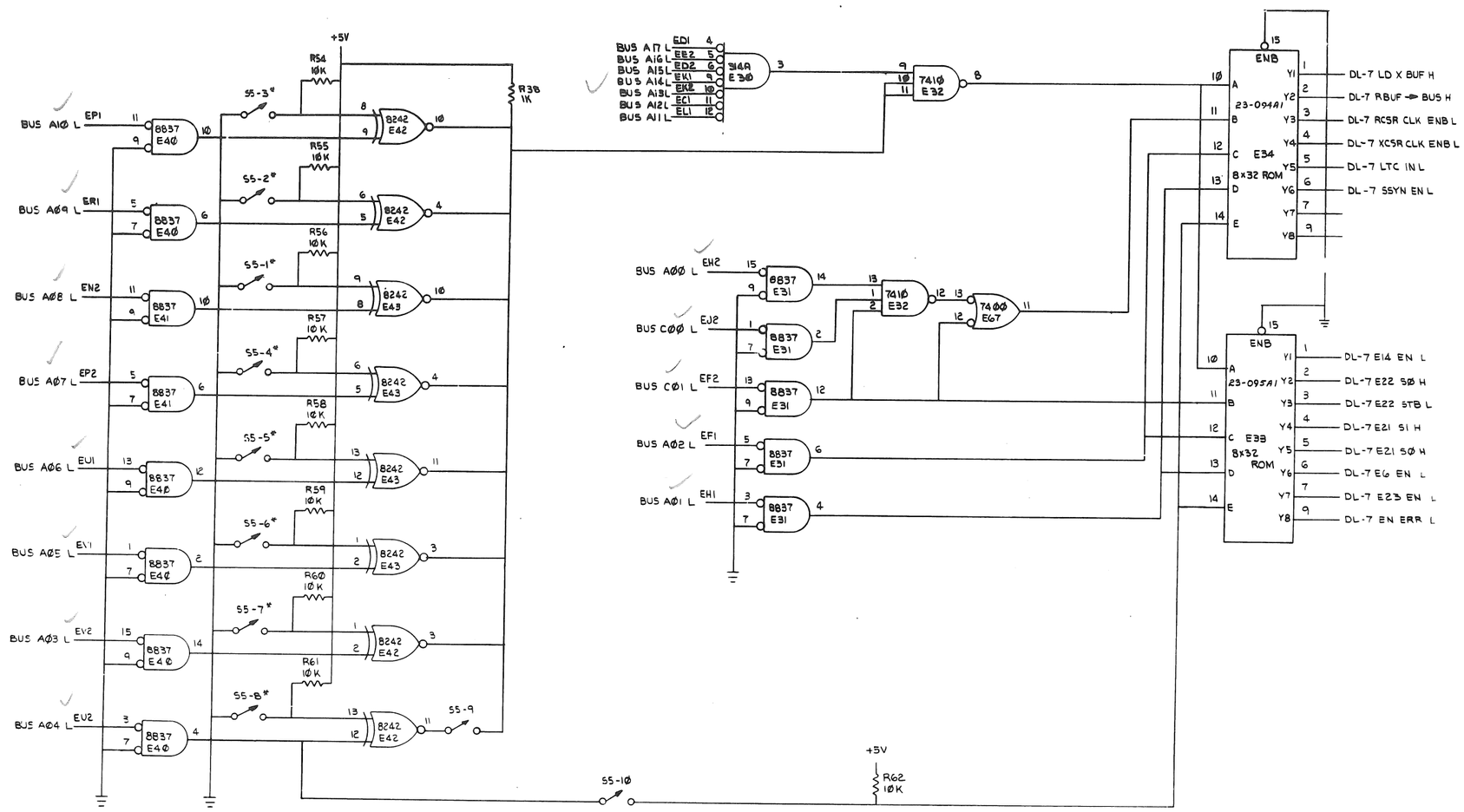

* ADDRESS SELECTION SWITCHES - OFF = 1 ON = 0

Address Selection

REVISIONS		
CHK	CHANGE NO.	REV.

TITLE	SIZE	CODE	NUMBER	REV.
SLU/RIC OPTION (DL-7)	D	CS	M7856-0-1	E
SCALE 1/1	SHEET 9 OF 9	DIST.		

DEC FORM NO. DRD 138

"THIS DRAWING AND SPECIFICATIONS, HEREIN, ARE THE PROPERTY OF DIGITAL EQUIPMENT CORPORATION AND SHALL NOT BE REPRODUCED OR COPIED OR USED IN WHOLE OR IN PART AS THE BASIS FOR THE MANUFACTURE OR SALE OF ITEMS WITHOUT WRITTEN PERMISSION.
COPYRIGHT © 1975, DIGITAL EQUIPMENT CORPORATION"

(FOR 23094A1-A07 & 23095A1-A07)

DESCRIPTION	DWG./PART NO.	ITEM NO.

UNLESS OTHERWISE SPECIFIED DIMENSIONS ARE IN INCHES

ANGLES ±0° 30'	CLASS OF ACCURACY (CHECK ONE)	NOMINAL DIMENSION RANGE INCHES					
		OVER 0 TO 0.2	OVER 0.2 TO 1.2	OVER 1.2 TO 4.0	OVER 4.0 TO 12.0	OVER 12.0 TO 40.0	OVER 40.0 TO 80.0
SURFACE QUALITY IN ✓ MICROINCHES	MEDIUM ☐	±.004	±.008	±.012	±.016	±.024	±.04
	PREFERRED ☐	±.012	±.016	±.025	±.04	±.063	±0.1

QUANTITY & VARIATION

THIRD ANGLE PROJECTION

REMOVE BURRS AND BREAK SHARP CORNERS

DO NOT SCALE DWG

MATERIAL —

FINISH —

DRN. J. A.
CHK'D
ENG.
PROJ. ENG.
PROD.

NEXT HIGHER ASSY. D-CS-M7856-0-1

SCALE —

SHEET 1 OF 3

FIRST USED ON DL11-W

digital

TITLE ROM LISTING

SIZE	CODE	NUMBER	REV.
K	CS	M7856-0-9	

DIST.

REVISIONS: REV. | CHANGE NO. | CHK

DEC 16-(325)-1080-1B-R275
DRB 100A

DEC PART NUMB: 23094A1-A07
ORIGINATOR: BOB PRATT
DATE OF ORIGIN: 2/28/75

DECIMAL LOC		OCTAL LOC	BINARY DATA	OCTAL DATA
0		00	00111100	074
1		01	00111100	074
2		02	00111100	074
3		03	00111100	074
4		04	00111100	074
5		05	00111100	074
6		06	00111100	074
7		07	00111100	074
8		10	00111100	074
9		11	00111100	074
10		12	00111100	074
11		13	00111100	074
12		14	00001100	014
13		15	00111100	074
14		16	00011100	034
15		17	00111100	074
16		20	00011000	030
17		21	00111100	074
18	777560	22	00011100	034
19		23	00111100	074
20		24	00010100	024
21		25	00111100	074
22	777564	26	00011100	034
23		27	00111100	074
24		30	00011100	034
25		31	00111100	074
26	777562	32	00011110	036
27		33	00111100	074
28		34	00011101	035
29		35	00111100	074
30	777566	36	00011100	034
31	777546	37	00111100	074

DEC PART NUMB: 23-095A1-A07
ORIGINATOR: BOB PRATT
DATE OF ORIGIN: 2/28/75

DECIMAL LOC	OCTAL LOC	BINARY DATA	OCTAL DATA
0	00	11111111	377
1	01	11111111	377
2	02	11111111	377
3	03	11111111	377
4	04	11111111	377
5	05	11111111	377
6	06	11111111	377
7	07	11111111	377
8	10	11111111	377
9	11	11111111	377
10	12	11111111	377
11	13	11111111	377
12	14	11011111	337
13	15	11111111	377
14	16	11111111	377
15	17	11111111	377
16	20	10001111	217
17	21	11111111	377
18	22	11111111	377
19	23	11111111	377
20	24	11010001	321
21	25	11111111	377
22	26	11111111	377
23	27	11111111	377
24	30	01000010	102
25	31	11111111	377
26	32	11111111	377
27	33	11111111	377
28	34	11111111	377
29	35	11111111	377
30	36	11111111	377
31	37	11111111	377

This drawing and specifications, herein are the property of Digital Equipment Corporation and shall not be reproduced or copied or used in whole or in part as the basis for the manufacture or sale of items without written permission.

WIRE TABLE

ITEM NO.	DESCRIPTION AWG	DESCRIPTION COLOR	PAIR NO.	FROM CONNECTION	FROM WITH	TO CONNECTION	TO WITH
3	22	BLK	1	P1-2	2	P2-KK	5
3		RED		P1-3	2	P2-S	
3,7		SHIELD		SEE NOTE #2	—	P2-A(NOTE #3)	
3		BLK	2	P1-4	2	P2-EE	
3		WHT		P1-5	2	P2-AA	
3,7		SHIELD		SEE NOTE #2	—	P2-JJ(NOTE #3)	
3		BLK	3	P1-6	2	P2-PP	
3		GRN		P1-7	2	P2-K	
3,7		SHIELD		SEE NOTE #2	—	P2-VV(NOTE #3)	
6	22	BLK	—	P2-E	5	P2-H	5

LEGEND

VARIATION	LENGTH X	LENGTH Y
7008360-0	25IN±1.0	27IN±1.0
7008360-1	46IN±1.0	48IN±1.0
7008360-9	9FT±2IN	9FT 2IN ± 2IN

NOTES:

1. * ASTERISKS INDICATE CAVITIES NOT USED OR DESIGNATED BY LETTERS.
2. DRAIN WIRES TO BE CUT BACK TO OUTER INSULATION ON P1 END OF CABLE ONLY. SHIELDS TO BE CUT BACK TO OUTER INSULATION ON BOTH ENDS OF CABLES.
3. DRAIN WIRES ON P2 END OF CABLE TO BE EACH ENCLOSED WITH ITEM #7 (TUBING) FROM END OF CABLE JACKET TO POINT WHERE THEY ENTER P2 CONNECTOR.
4. ITEM #6 (WIRE) TO BE APPROXIMATELY ONE(1) INCH LONG.
5. PLACE ITEM #9 ("THIS SIDE UP" STICKER) ON LETTERED SIDE OF ITEM #4 (BERG HOUSING) AS SHOWN.

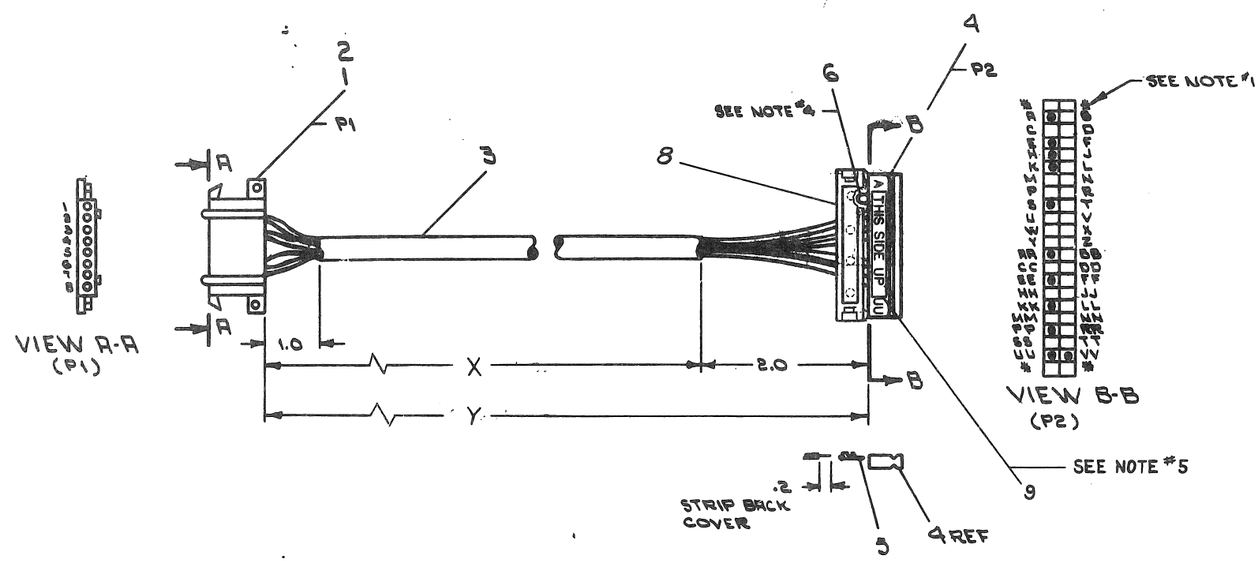

QTY.	DESCRIPTION	PART NO.	ITEM NO.
1	LABEL, THIS SIDE UP	3611567	9
1	STRAIN RELIEF	12.1166	8
A/R	TUB. #18 TEF. THINWALL WHT	9107278-11	7
A/R	WIRE #22 AWG STRD TEF BLK	9107350-00	6
11	SOCKET, CRIMP # 47216	1210089-07	5
1	HOUSING, BERG #65023-015	1210913-15	4
A/R	CABLE, BELDEN #8777-3PR. SHLD	9107723-0	3
6	CONTACT MATE-N-LOCK (FEMALE)	1209379-03	2
1	CONN. MATE-N-LOCK (FEMALE)	1209340-00	1

PARTS LIST

REV.	CHANGE NO.	CHK.
A	KL 8E-00002	J. MCNAMARA 5/13/71
B	KL8E-00006	E. CLARK 3-17-73
C	7008360-00001	B. REGAN 10-29-73
D	7008360-00002	REGAN 3/21/74
E	7008360-00003	R. REGAN 9-30-74
F	8C05M-00001	R. REGAN 10/4/74
H	7008360-00004	J. MCNAMARA OCT 76

REVISIONS

FIRST USED ON OPTION/MODEL: PDP-8E

DO NOT SCALE DRAWING
UNLESS OTHERWISE SPECIFIED
DIMENSION IN INCHES
TOLERANCES
DECIMALS ± 0.005 FRACTIONS ± 1/64 ANGLES ± 0°30'
FINAL SURFACE QUALITY
REMOVE BURRS AND BREAK SHARP CORNERS

MATERIAL: SEE PARTS LIST

FINISH

NEXT HIGHER ASSY: A-ML-KL8-E-0

SCALE: NONE

SHEET 1 OF 1

		DATE
DRN.	J. Eklund	APR 71
CHK'D.		4-5-71
ENG.		4-6-71
PROJ. ENG.		4-1-71
PROD.		4/19/71

digital EQUIPMENT CORPORATION
MAYNARD, MASSACHUSETTS

TITLE: CABLE ASSEMBLY (KL8E)

SIZE D | CODE IA | NUMBER 7008360-0-0 | REV H

DIST.

SEC FORM NO. 1300

This drawing and specifications, herein, are the property of Digital Equipment Corporation and shall not be reproduced or copied or used in whole or in part as the basis for the manufacture or sale of items without written permission.

WIRE TABLE

ITEM NO.	DESCRIPTION AWG	DESCRIPTION COLOR	FROM CONNECTION	FROM WITH	TO CONNECTION	TO WITH
1	26	BLU/WHT	P1-1 *	SOLDER	J1-VV	7
		WHT/BLU	P1-2		J1-F	
		ORN/WHT	P1-3		J1-J	
		WHT/ORN	P1-4		J1-V	
		GRN/WHT	P1-5		J1-T	
		WHT/GRN	P1-6		J1-Z	
		BRN/WHT	P1-7 **		J1-UU	
		WHT/BRN	P1-8		J1-BB	
		SLA/WHT	P1-9		J1-Y	
		WHT/SLA	P1-10		J1-W	
		BLU/RED	P1-11		J1-FF	
		RED/BLU	P1-12		J1-JJ	
		ORN/RED	P1-13		J1-D	
		SLA/RED	P1-14		J1-LL	
1	26	SLA/GRN	P1-15	SOLDER	J1-N	7

ITEM NO.	DESCRIPTION AWG	DESCRIPTION COLOR	FROM CONNECTION	FROM WITH	TO CONNECTION	TO WITH
1	26	RED/BRN	P1-16	SOLDER	J1-NN	7
		SLA	P1-17		J1-R	
		RED/SLA	P1-18		J1-U	
		BLU/BLK	P1-19		J1-P	
		BLK/BLU	P1-20		J1-DD	
		ORN/BLK	P1-21		J1-MM	
		BLK/ORN	P1-22		J1-X	
		GRN/BLK	P1-23		J1-RR	
		BRN/RED	P1-24		J1-L	
		RED/ORN	P1-25		J1-C	
		SHIELD	P1-1 *		J1-A	
1		SHIELD	P1-7 **		J1-B	7
3		BLK	P1-1 *	SOLDER	P1-7 **	SOLDER
2	26	RED	J1-E	7	J1-M	7

N.B
* DENOTES THREE WIRES ARE SOLDERED INTO THE P1-1 SOLDER CUP
** DENOTES THREE WIRES ARE SOLDERED INTO THE P1-7 SOLDER CUP

LEGEND

NUMBER	VARIATION DIM X	VARIATION DIM Y (PRECUT)
BCØ5C-25	25'±3"	25'1.8"
BCØ5C-5Ø	5Ø'±2%	5Ø'1.8"
BCØ5C-Ø9	9'±3"	9'1.8"

NOTES:

1. MANUFACTURING SHOULD USE MACHINE CRIMPER TOOL FOR CRIMPING PINS (ITEM #7) MUST BE HT68 FROM BERG ELECT
2. ONLY DEC PART # 1210090-0-0 MAY BE USED AS J1.
3. PLACE ITEM #9 ("THIS SIDE UP" STICKER) ON LETTERED SIDE OF ITEM #6 (BERG HOUSING) AS SHOWN.
4. USE ITEM #13 (9107302-11) IN TWO PLACES (P1-1, P1-7) TO PREVENT SHORTING
5. USE ITEM #12 (9107295-11) ON ALL REMAINING SOLDER CUPS TO PREVENT SHORTING.
6. DUE TO ± TOLERANCES WITH DIFFERENT VENDORS THE HOOD (ITEM #8) MAY VARY IN OUTSIDE DIAMETER CAUSING POTENTIAL STRAIN RELIEF GRIPPING PROBLEMS. SHOULD THIS CONDITION BE PRESENT USE ITEM #4 (9107834) AT JUNCTION OF CABLE AND HOOD.
7. PLACE ITEM #4 (9107256) OVER SHIELD WIRE J1-A, J1-B, P1-1, P1-7.

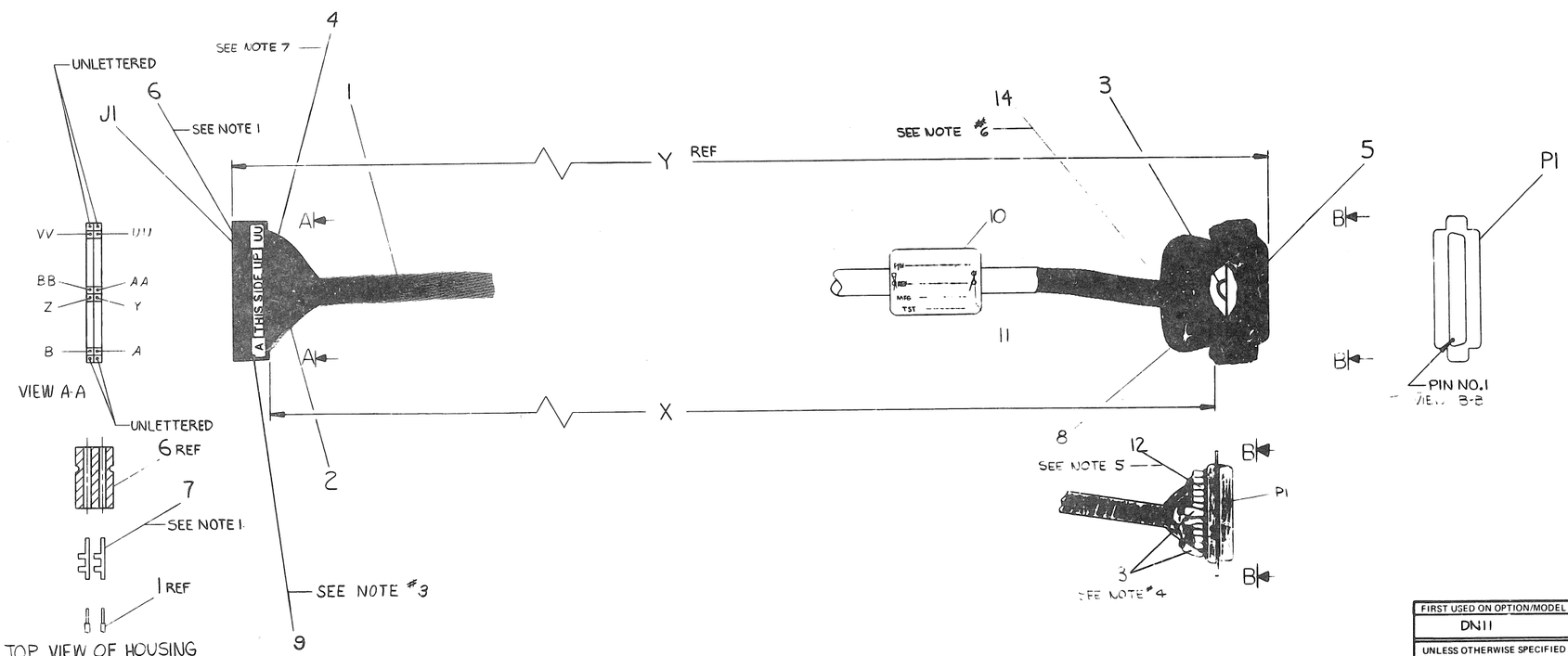

QTY.	DESCRIPTION	PART NO.	ITEM NO.
A/R	TAPE, DOUBLE SIDED	9007834	14
A/R	TUBING, 10 AWG, CLEAR	9107302-11	13
A/R	TUBING 14 AWG, CLEAR	9107295-11	12
2	TIE WRAPS	9007031	11
1	CABLE, LABEL	9009532	10
1	LABEL, THIS SIDE UP	3611567	9
1	HOOD, #DB51226-1 CINCH	12Ø5885	8
29	SOCKET, # HT-68	1210089-5	7
1	HOUSING, # 2Ø383 BERG	1210090-0-0	6
1	PLUG, # DB-25P CINCH	12Ø5886	5
A/R	TUBING, # 22 AWG TEF BLK	9107256-ØØ	4
A/R	WIRE, # 26 AWG STRD TEF BLK	9107636-ØØ	3
A/R	WIRE, # 26 AWG STRD TEF RED	9107636-22	2
A/R	CABLE, 25 CONDUCTOR # 26 AWG	9107736	1

PARTS LIST

FIRST USED ON OPTION/MODEL: DN11

UNLESS OTHERWISE SPECIFIED DIMENSION IN INCHES TOLERANCES
DECIMALS: XXX .005, XX .07, X .1
ANGLES: ±0° 30'
REMOVE BURRS AND BREAK SHARP CORNERS SURFACE QUALITY ✓
MATERIAL: —
FINISH: —

DRN. S. Roberts DATE 11/3/71
CHK. R. Cook DATE 11/5/71
ENG. R. Smith DATE 11/5/71
PROJ. ENG. R. Smith DATE 11/5/71
PROD. DATE
NEXT HIGHER ASSY. —
SCALE NONE
SHEET 1 OF 1

digital EQUIPMENT CORPORATION MAYNARD MASSACHUSETTS

TITLE: CABLE, MODEM BCØ5C

SIZE	CODE	NUMBER	REV.
D	UA	BCØ5C-Ø-Ø	D

DIST.

REV.	CHANGE NO.	CHK.	
A	BCØ5C-00001		SMITH
B	BCØ5C-00002		E. ALLEN 10-29-79 B. REGAN
C	BCØ5C-00003		V. BASTINANI
D	BCØ5-00004		R. SMITH 12 JULY 76

DFC FORM NO DRD 100-A

"THIS DRAWING AND SPECIFICATIONS, HEREIN, ARE THE PROPERTY OF DIGITAL EQUIPMENT CORPORATION AND SHALL NOT BE REPRODUCED OR COPIED OR USED IN WHOLE OR IN PART AS THE BASIS FOR THE MANUFACTURE OR SALE OF ITEMS WITHOUT WRITTEN PERMISSION.
COPYRIGHT © 1975, DIGITAL EQUIPMENT CORPORATION"

WIRE TABLE

ITEM NO	DESCRIPTION AWG	COLOR	FROM CONNECTION	WITH	TO CONNECTION	WITH
3	22	BLK	P1-VV	7	P2-7	SOLDER
		GRN/WHT	P1-C		P2-25	
		GRN/BLK	P1-JJ		P2-12	
		ORN/BLK	P1-FF		P2-11	
		RED	P1-DD		P2-20	
		GRN	P1-BB		P2-8	
		BLU/WHT	P1-Z		P2-6	
		ORN	P1-X		P2-22	
		BLU	P1-V		P2-4	
		WHT	P1-T		P2-5	
		BLU/BLK	P1-R		P2-17	
		BLK/WHT	P1-N		P2-15	
		RED/WHT	P1-L		P2-24	
		WHT/BLK	P1-J		P2-3	
3		RED/BLK	P1-F		P2-2	SOLDER
8		BLK	P1-E	7	P1-M	7
8	22	BLK	P2-1	SOLDER	P2-7	SOLDER

LEGEND

NUMBER	VARIATION DIM "X"	DIM "Y" PRECUT
BCØ3L-10	10FT ± 2IN	10FT, 5IN
BCØ3L-5	5FT ± 2IN	5FT, 5IN
BCØ3L-1R	1FT 9IN ± 1IN	2FT

NOTES:

1. EACH SOLDERED CONN ON P2 SHALL BE INSULATED WITH A .25 PIECE OF SHRINK TUBING (ITEM #5)
2. PLACE ITEM #9 (THIS SIDE UP STICKER) ON LETTERED SIDE OF ITEM #4 (CONN HOUSING) AS SHOWN.
3. FOR STRAIN RELIEF WRAP 2 TURNS OF TAPE (ITEM #6) AROUND CABLE (ITEM #3) AS SHOWN.
4. PINS MARKED * IN VIEW B-B, ARE NOT USEABLE
5. WIRES COMING FROM CENTER OF PLUG CONN. SHOULD BE 18" LG., ALL OTHERS SHOULD BE CONFINED INTO HOOD OF CONN. SO THAT THEY'RE NOT BUNCHED.

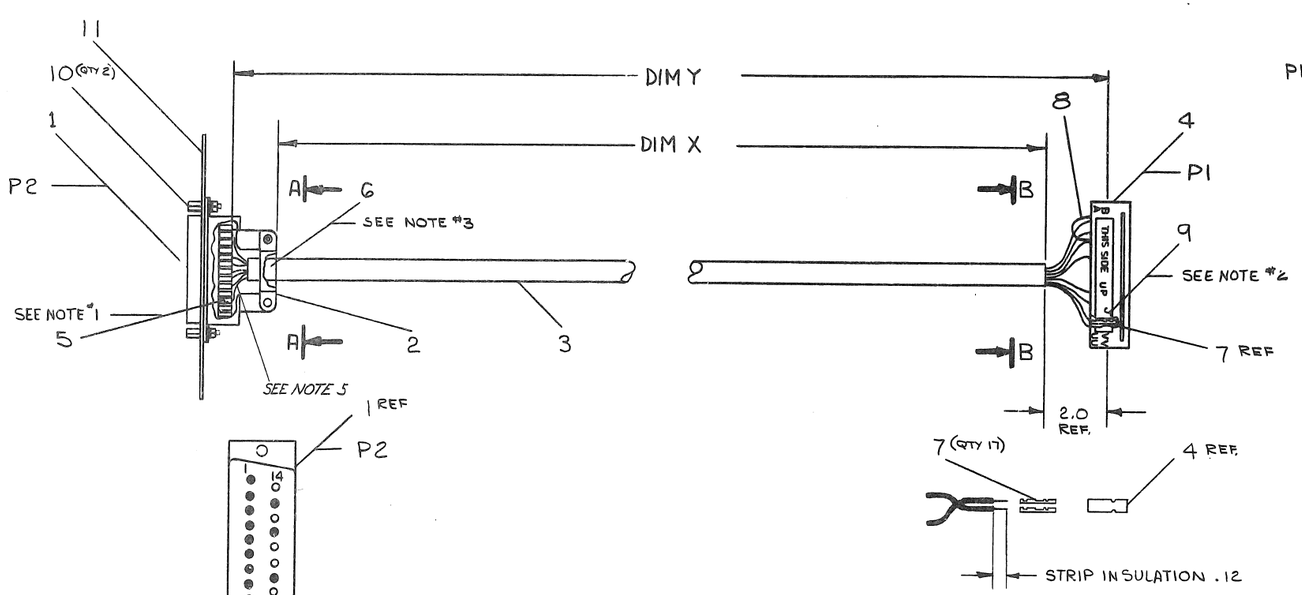

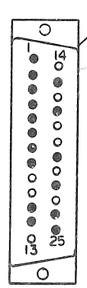

VIEW A-A
(REAR VIEW)
SCALE: NONE

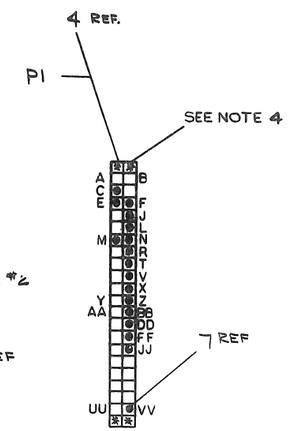

VIEW B-B
(REAR VIEW)
SCALE: NONE

1	PLATE, CONN. MTG.	B-MD-7414072-0-0	11
2	SCREW LOCK ASSY	9008451-00	10
1	LABEL (THIS SIDE UP)	3611567	9
3IN	WIRE, STRANDED #22 AWG IPVC (BLK)	9107350-00	8
17	SOCKET, CRIMP	1210089-07	7
A/R	TAPE, DOUBLE SIDED .50 W D.	9007834	6
16	TUBING, HEAT SHRINK .12	9107255-09	5
1	CONN, 44 POS, HSG.	1210918-15	4
A/R	CABLE, 15 COND., 22 AWG.	9107672-00	3
1	HOOD, CONN.	1212516-00	2
1	CONNECTOR, PLUG	1205886-00	1

DESCRIPTION	DWG./PART NO.	ITEM NO.

UNLESS OTHERWISE SPECIFIED DIMENSIONS ARE IN INCHES

ANGLES ±0° 30'	CLASS OF ACCURACY (CHECK ONE)	NOMINAL DIMENSION RANGE INCHES: OVER 0 TO 0.2	OVER 0.2 TO 1.2	OVER 1.2 TO 4.0	OVER 4.0 TO 12.0	OVER 12.0 TO 40.0	OVER 40.0 TO 80.0
SURFACE QUALITY IN MICROINCHES	MEDIUM	±.004	±.008	±.012	±.016	±.024	±.04
	PREFERRED	±.012	±.016	±.025	±.04	±.063	±0.1

QUANTITY & VARIATION

THIRD ANGLE PROJECTION

REMOVE BURRS AND BREAK SHARP CORNERS

DO NOT SCALE DWG

MATERIAL SEE PARTS LIST

FINISH — / —

DRN 5/20/75
CHK 6/27/75
ENG 6/27/75
PROJ ENG 7-1-75
PROD 6/10/75

FIRST USED ON —

NEXT HIGHER ASSY. —

SCALE 1/1

SHEET 1 OF 1

digital

TITLE
CABLE ASSY
BCØ3L

SIZE	CODE	NUMBER	REV.
D	UA	BCØ3L-0-0	C

DIST.

REVISIONS			
CHK	CHANGE NO.	REV.	
	BCØ3L-00002	A	16-Apr-75 B. SAMPSON
	BCØ3L-00003	B	15-Mar-76 M.E. LEWANDOWSKI
	BCØ3L-00004	C	5-Aug-76 R. SAMPSON

DEC FORM NO. DRD 100-C

D UA BCØ3L-0-0 REV. C

Mult R = Mult factor - 1

× mult R.