LAURIE

FIELD MAINTENANCE PRINT SET

TABLE OF CONTENTS

UNIT VARIATIONS COVERED BY THIS PRINT SET
KD11-E

KD11-E

Field Maintenance Print Set

Digital Equipment Corporation

PRINT SET ORDER NO.
MPØØØ43

REVISIONS		
REV.		
CHG. NO.		
DATE		

USED ON OPTION/MODEL	
11/34	
SHEET I OF 1	

DRN.	D. HEALY	DATE	12/29/75
CHK'D	D. HEALY	DATE	12/29/75
PROJ. ENG.	[illegible]	DATE	2/3/76
FIELD SERV.	[illegible]	DATE	3/4/76

digital

TITLE: FIELD MAINTENANCE PRINT SET KD11-E

SIZE	CODE	NUMBER	REV.
B	TC	KD11-E-3	

DIST.

EN-01124-16-N675-(327)

DRB 124

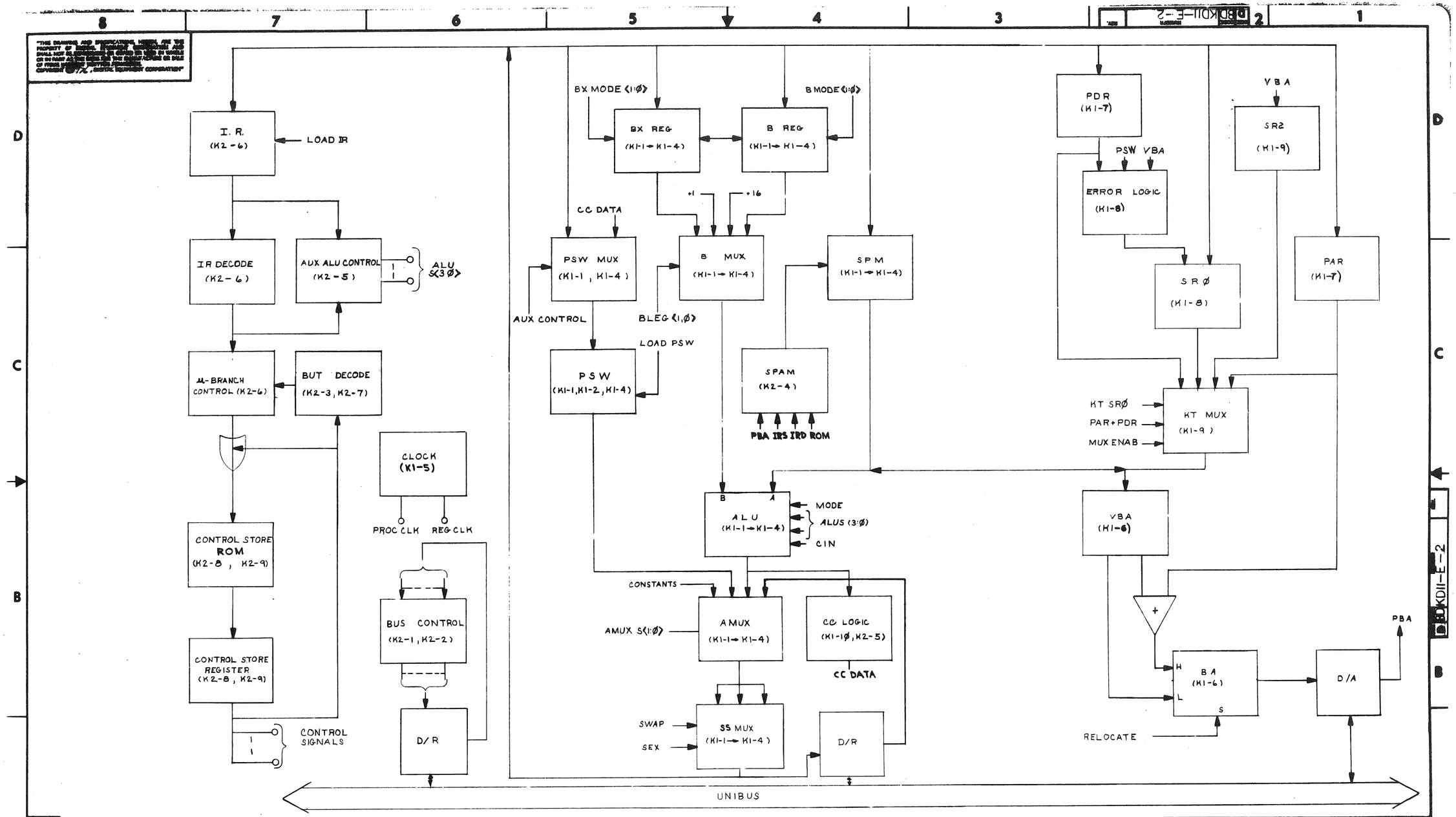

DRN.		1-28-76
CHK'D		1-28-76
ENG.		1-28-76
PROJ. ENG.		1-28-76
PROD.		1-28-76
NEXT HIGHER ASSY.		
SCALE		
SHEET	OF	

FIRST USED ON

TITLE BLOCK DIAGRAM (KDII-E)

SIZE	CODE	NUMBER	REV.
D	BD	KDII-E-2	

DIST.

REVISIONS: REV. / CHANGE NO. / CHK.

KDII-E CONTROL WORD

	E118	E117	E116	E115	E114	E96	E94	E95	E97	E112	E111	E113
	Ø 1 2 3	4 5 6 7	8 9 10 11	12 13 14 15	16 17 18 19	20 21 22 23	24 25 26 27	28 29 30 31	32 33 34 35	36 37 38 39	40 41 42 43	44 45 46 47
INTEGRATED CIRCUIT DESIGNATION												
NORMAL CONDITION OF EACH BIT	x x x x	x x x x x	Ø Ø Ø	Ø Ø Ø Ø	Ø 1 Ø Ø	1 Ø 1	Ø Ø Ø Ø	Ø Ø Ø 1	Ø Ø Ø Ø	Ø Ø 1 1	1 1 Ø Ø	Ø Ø Ø Ø

- ROM SPA H (R17)
- FORCE KERNEL H (NOP)
- BUT SERVICE H (NOP)
- PREVIOUS MODE L (NOP)
- FORCE RS V I L (NOP)
- SPA DST SEL H (RBA)
- SPA SRC SEL H (ROM)
- BUT BITS (NOP)
- AMUX CONTROL H (ALU)
- SSMUX CONTROL H (STRT)
- B,BX,OVX,DBE CONTROL H (HOLD)
- ALU,BLEG CONTROL H (A)
- AUX CONTROL H (NOP)
- LONG CYCLE L (SHORT)
- LOAD BAR (NOP)
- ENAB MAINT H (NOP)
- BUS CONTROL H (DATI)
- DATA TRAN H (NO TRANS)
- MISCELLANEOUS CONTROL H (NOP)
- NEXT MPC ADDRESS H (NO DEFALT)

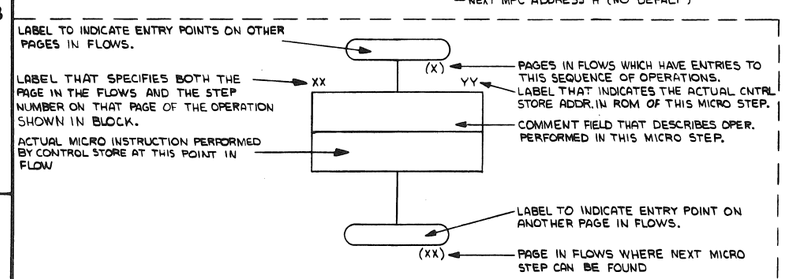

DEFINITION OF FLOW SYMBOLS

MISC. CONTROL

OPERATION	MISC 9	10	11
NOP	Ø	Ø	Ø
LOAD IR	Ø	Ø	1
LOAD PSW	Ø	1	Ø
LOAD CC	Ø	1	1
BUT DEST	1	Ø	Ø
ENAB STOV	1	Ø	1
LOAD CNT	1	1	Ø
COUNT	1	1	1

BUS CONTROL

OPERATION	CNTRL 13	14
DATI	Ø	Ø
DATIP	Ø	1
DATO	1	Ø
DATOB	1	1

ALU/BLEG CONTROL

ALU FUNCTION	ALU/BLEG CNTRL 19	20	21	22	23
ZERO	Ø	Ø	Ø	Ø	Ø
ABAR	Ø	Ø	Ø	Ø	1
A+1	Ø	Ø	Ø	1	Ø
A-1	Ø	Ø	Ø	1	1
A-3	Ø	Ø	1	Ø	Ø
A	Ø	Ø	1	Ø	1
B	Ø	Ø	1	1	Ø
ONE BAR	Ø	Ø	1	1	1
A+B	Ø	1	Ø	Ø	Ø
A·B	Ø	1	Ø	Ø	1
ABAR·B	Ø	1	Ø	1	Ø
AVB	Ø	1	Ø	1	1
A*B	Ø	1	1	Ø	Ø
A·BBAR	Ø	1	1	Ø	1
K16	Ø	1	1	1	Ø
A+B+1	1	Ø	Ø	Ø	Ø
A+BX	1	Ø	Ø	Ø	1
A-BX	1	Ø	Ø	1	Ø
A+BX+1	1	Ø	Ø	1	1
A+Z	1	Ø	1	Ø	Ø
A-Z	1	Ø	1	Ø	1
A+A	1	Ø	1	1	Ø
BX	1	Ø	1	1	1
BBAR	1	1	Ø	Ø	Ø
BX BAR	1	1	Ø	Ø	1
A+A+1	1	1	Ø	1	Ø

B,BX,OVX,DBE CONTROL

OPERATION	B,BX CNTRL 24	25	26	27
HOLD	Ø	Ø	Ø	Ø
LOAD B	Ø	Ø	Ø	1
LOAD BX	Ø	Ø	1	Ø
SL(BX-Ø),LDB	Ø	Ø	1	1
SL(BX-COUT),LDB	Ø	1	Ø	Ø
SL(BX-1),LDB	Ø	1	Ø	1
SL(B-Ø)	Ø	1	1	Ø
SL(B-Ø),LDBX	Ø	1	1	1
SL(B-BX15)	1	Ø	Ø	Ø
SL(BX-Ø)	1	Ø	Ø	1
SL(BX-1)	1	Ø	1	Ø
SL(BX-OVX)	1	Ø	1	1
SL(BX-COUT)	1	1	Ø	Ø
SL(B-BX-Ø)	1	1	Ø	1
SR(B15-B-BX)	1	1	1	Ø
ENAB DBE	1	1	1	1

AMUX CONTROL

SELECT	AMUX 30	31
PSW	Ø	Ø
ALU	Ø	1
VECT	1	Ø
UBUS	1	1

SS MUX CONTROL

SELECT	SS 28	29
STRT	Ø	Ø
SEX	Ø	1
SWAB	1	Ø
EXTRWL	1	1

BUT BITS

BRANCH COND.	BITS 32	33	34	35
NOP	Ø	Ø	Ø	Ø
N BIT	Ø	Ø	Ø	1
Z BIT	Ø	Ø	1	Ø
CØ5	Ø	Ø	1	1
IR9	Ø	1	Ø	Ø
BXØØ	Ø	1	Ø	1
BXØ1	Ø	1	1	Ø
COUT	Ø	1	1	1
SP15	1	Ø	Ø	Ø
NBIT + Z BIT	1	Ø	Ø	1
BXØØ + SP15	1	Ø	1	Ø
BXØ1 + BXØØ	1	Ø	1	1
CØ5 + BXØ1 + BXØØ	1	1	Ø	Ø
NBIT + CØ5	1	1	Ø	1
BXØØ + CØ5	1	1	1	Ø
ALL	1	1	1	1

SPA SRC SEL

FIELD SEL.	SPA SRC SEL 36	37
ROM	Ø	Ø
RS	Ø	1
RD	1	Ø
RBA	1	1

SPA DST SEL

FIELD SEL.	SPA DST SEL 38	39
ROM	Ø	Ø
RS	Ø	1
RD	1	Ø
RBA	1	1

ROM SPA LINES

REG. SELECTED	ROM SPA 44	45	46	47
R5	1	Ø	1	Ø
R6 (SP)	1	Ø	Ø	1
R7 (PC)	1	Ø	Ø	Ø
R10	Ø	1	1	1
R11	Ø	1	1	Ø
R12	Ø	1	Ø	1
R13	Ø	1	Ø	Ø
R14	Ø	Ø	1	1
R15	Ø	Ø	1	Ø
R16	Ø	Ø	Ø	1
R17	Ø	Ø	Ø	Ø

A "1" IN THE TABLES SHOWN INDICATES A LOGIC "1" ROM OUTPUT BETWEEN +2.4 VOLTS AND +5.0 VOLTS.

A "Ø" IN THE TABLES SHOWN INDICATES A LOGIC "Ø" ROM OUTPUT BETWEEN 0.0 VOLTS AND +0.4 VOLTS.

NOTE THAT ALL LEVELS SHOWN REPRESENT ACTUAL CONTROL STORE ROM OUTPUTS.

REVISIONS	CHANGE NO.	CHK	REV.

FIRST USED ON OPTION/MODEL	QTY.	DESCRIPTION	PART NO.	FIND NO.
		PARTS LIST		

DIMENSIONAL TOLERANCE — DIMENSIONS ARE MILLIMETERS / INCHES UNLESS OTHERWISE SPECIFIED

MILLIMETERS	INCHES	ANGLES
X.XX = ±0.10	.XXX = ±.005	30° 30'
X.X = ±0.5	.XX = ±.02	
X = ±2.	.X = ±.1	

THIRD ANGLE PROJECTION

REMOVE BURRS AND BREAK SHARP CORNERS SURFACE QUALITY ✓

MATERIAL

FINISH

		DATE
DRN.	A. Bodem	11/10/76
CHK'D.	Ferguson	1-28-76
ENG.	Bill Butterfield	
PROJ. ENG.	A. Bodem	1-28-76
PROD.	R. W. MacDonald	1-28-76

NEXT HIGHER ASSY.

SCALE

SHEET 1 OF 26

DIST.

TITLE: KDIIE FLOW DIAGRAMS

SIZE D | CODE FD | NUMBER KDII-E-1 | REV.

MOV(B) = MOV OR BYTE
DOP(B) = DOUBLE OPERAND (WORD OF BYTE)
SOP(B) = SINGLE OPERAND (WORD OF BYTE)
MOD = MODIFYING INSTRUCTION
NON MOD = NON-MODIFYING INSTRUCTION
SMØ = SOURCE MODE (IR[8-6]) = Ø
DMØ = DEST. MODE (IR[2-0]) = Ø

NOTE: SERVICE ALWAYS EXECUTED BEFORE FETCHING NEXT INSTRUCTION. VECTOR ALWAYS LOADED, ONLY USED WHEN TRAP SEQUENCE ENTERED.

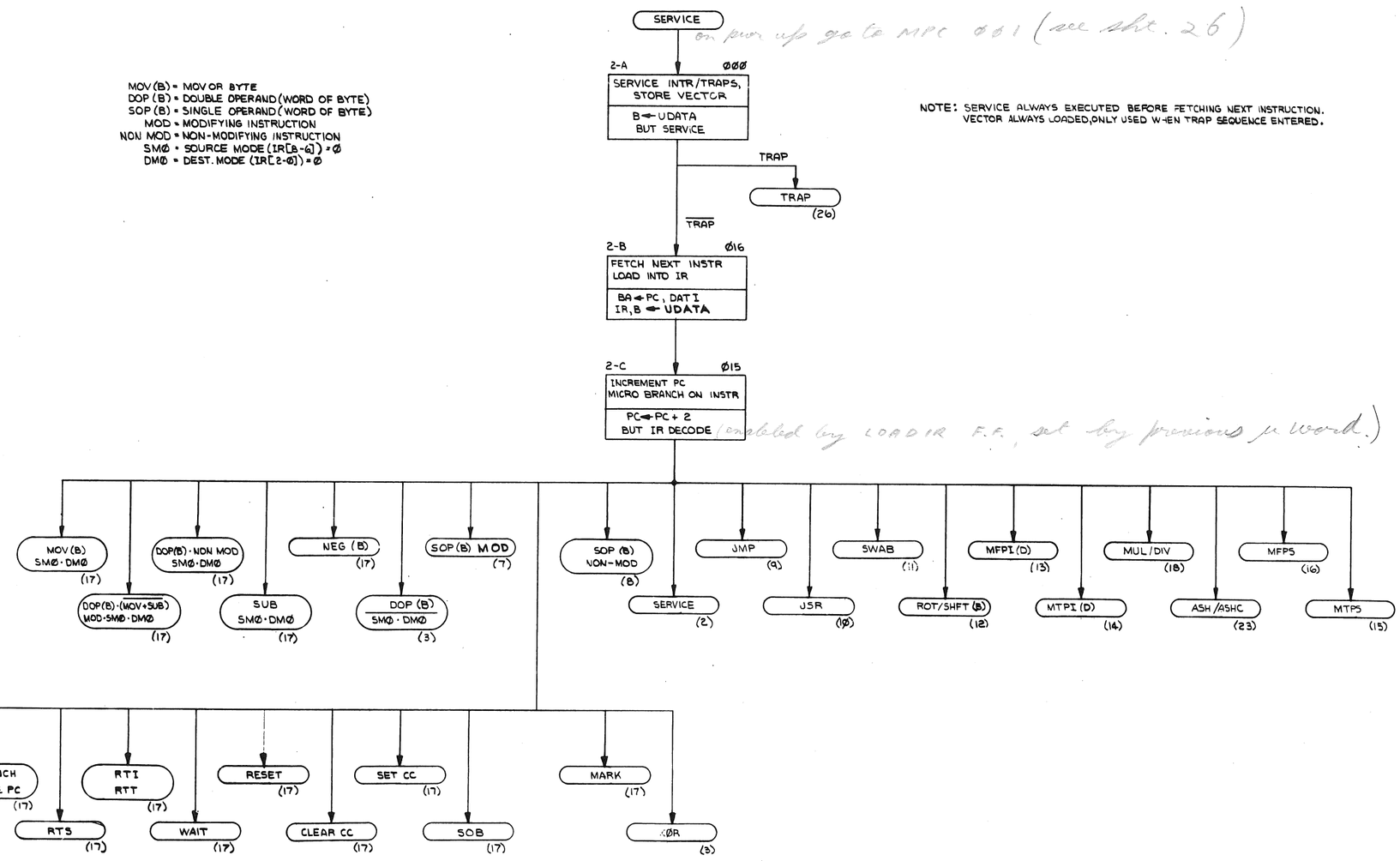

REVISIONS		
CHK	CHANGE NO.	REV.

TITLE	SIZE	CODE	NUMBER	REV.
KDIIE FLOW DIAGRAMS	D	FD	KDII-E-I	
SCALE —	SHEET 2 OF 26	DIST.		

DEC FORM NO. DRD 138

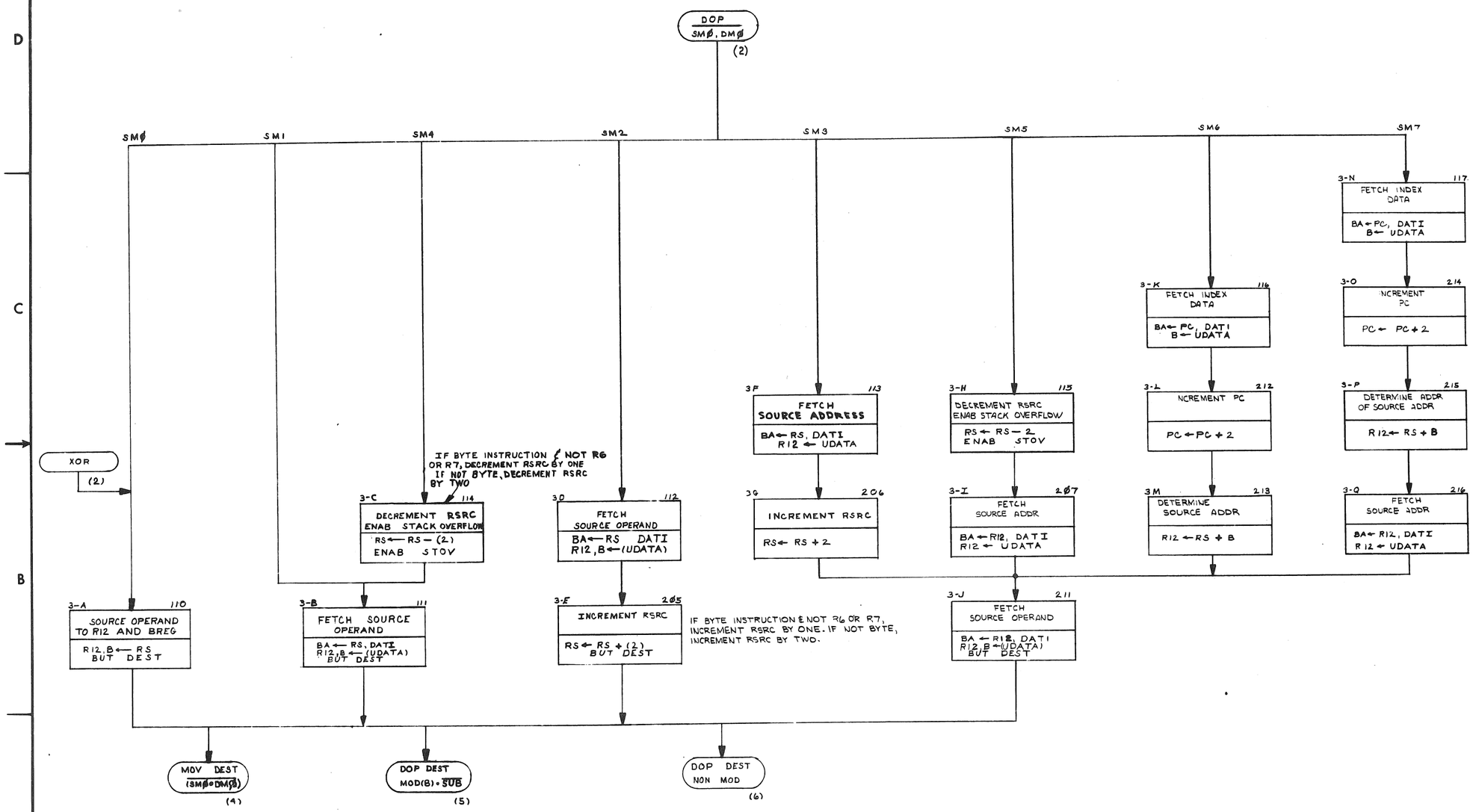

REVISIONS		
CHK	CHANGE NO.	REV.

TITLE: KDIIE FLOW DIAGRAMS

SIZE D | CODE FD | NUMBER KDII-E-1 | REV.

SCALE — | SHEET 3 OF 26 | DIST.

DEC FORM NO. DRD 138

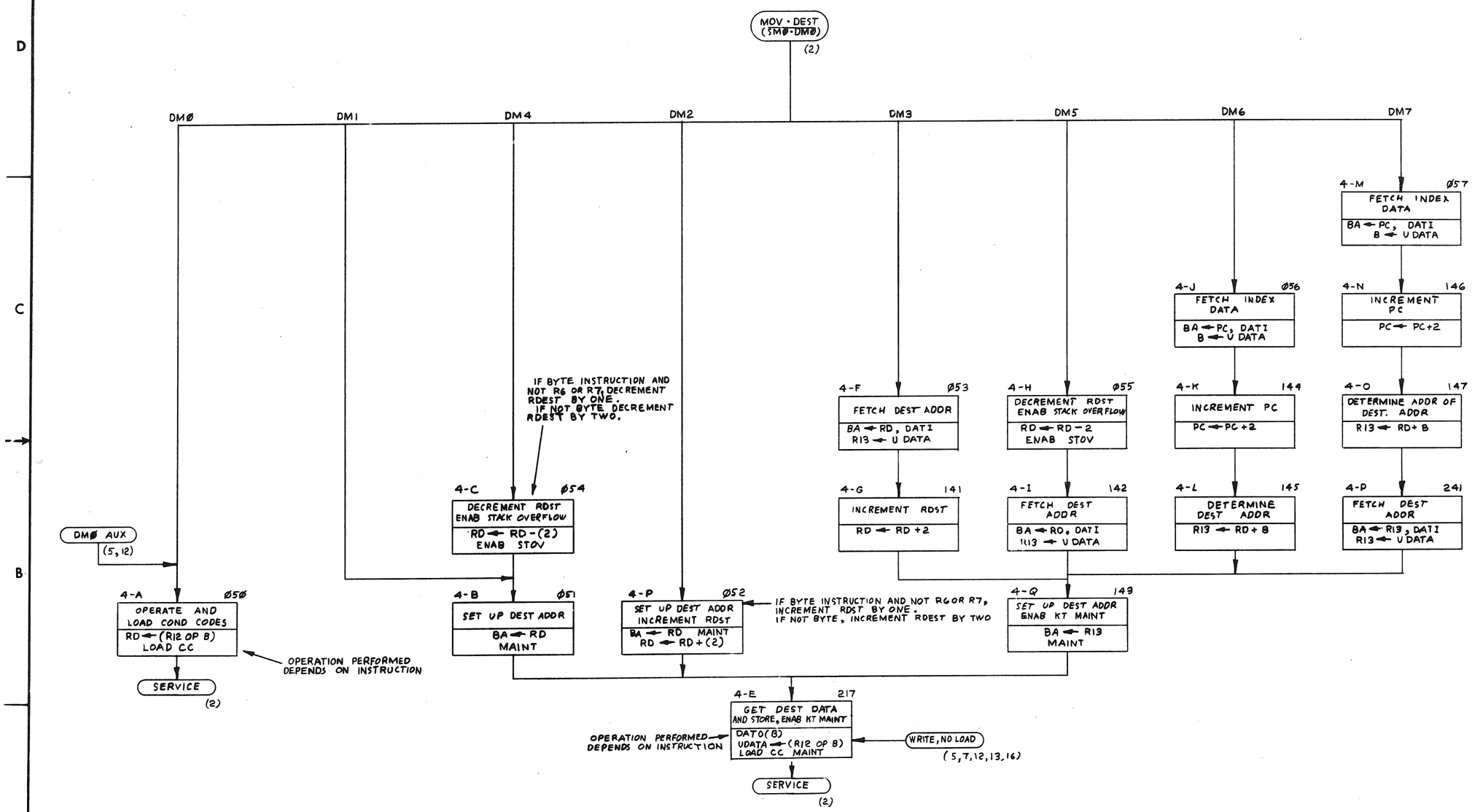

REVISIONS		
CHK	CHANGE NO.	REV.

TITLE: KDIIE FLOW DIAGRAMS

SIZE D CODE FD NUMBER KDII-E-I REV.

SCALE — SHEET 4 OF 26 DIST.

DEC FORM NO. DRD 138

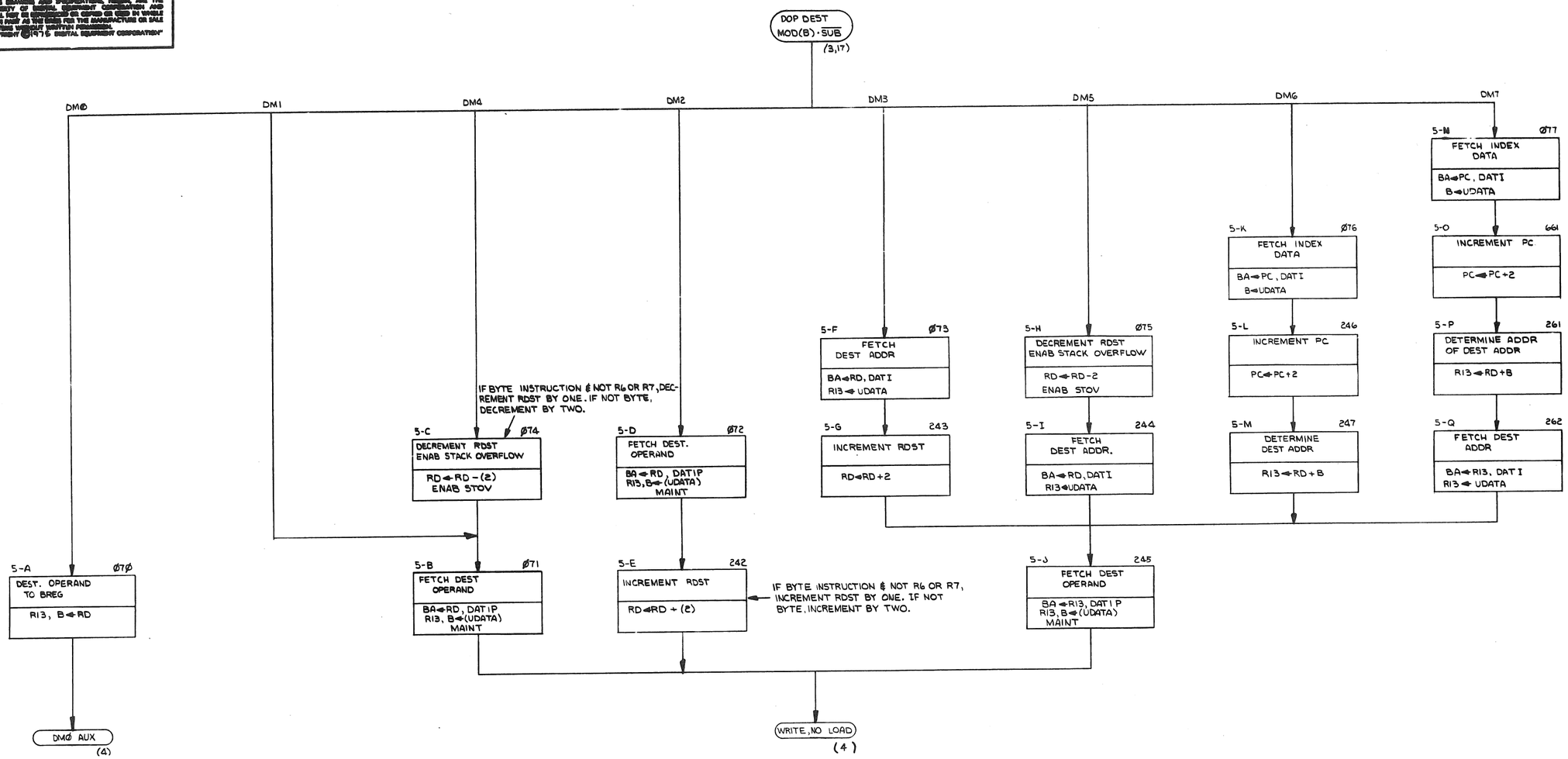

REVISIONS		
CHK	CHANGE NO.	REV.

TITLE	SIZE	CODE	NUMBER	REV.
KD11E FLOW DIAGRAMS	D	FD	KD11-E-1	
SCALE —	SHEET 5 OF 26	DIST.		

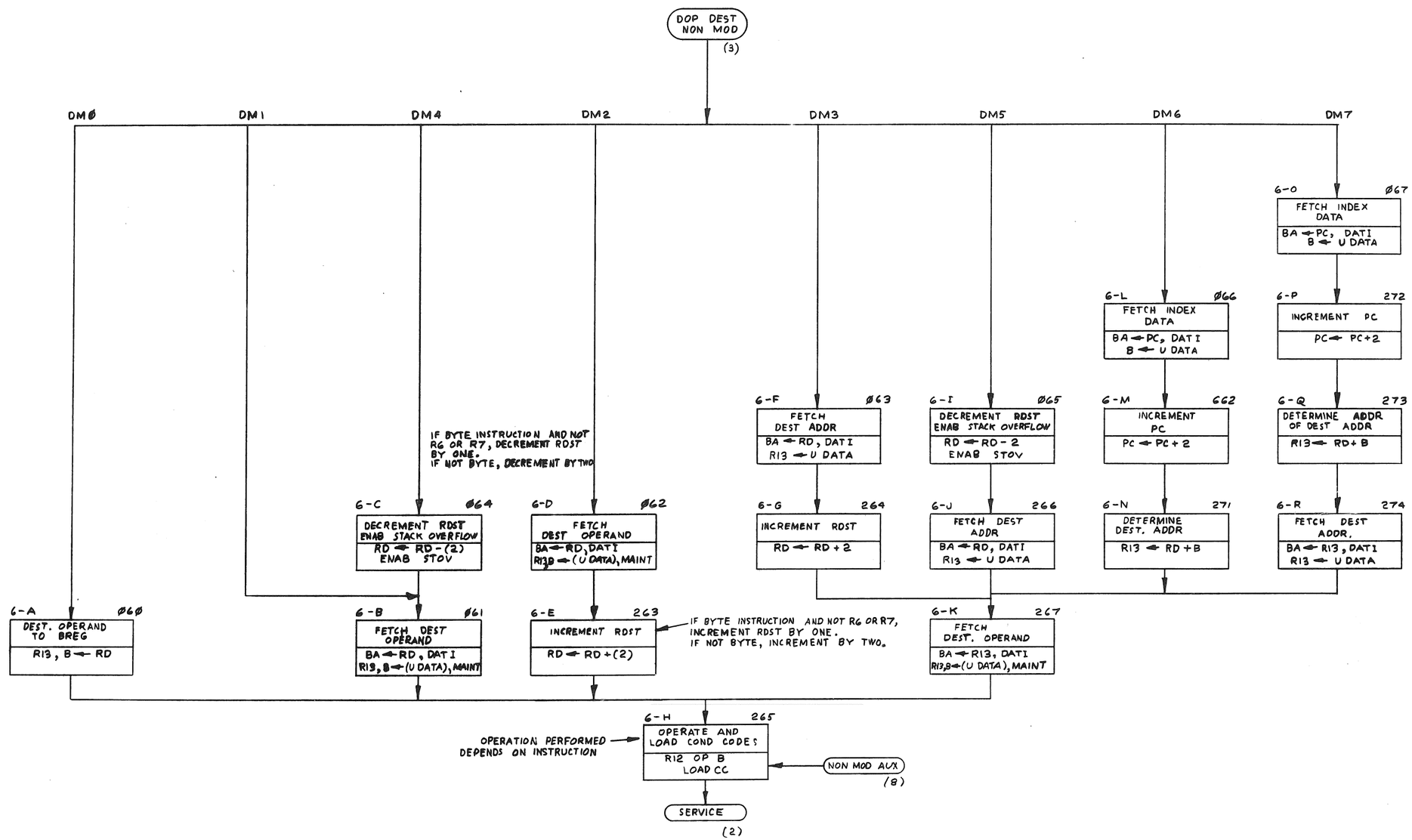

REVISIONS		
CHK	CHANGE NO.	REV.

TITLE KDII E FLOW DIAGRAMS

SIZE D CODE FD NUMBER KDII-E-I REV.

SCALE — SHEET 6 OF 26 DIST.

DEC FORM NO. DRD 123

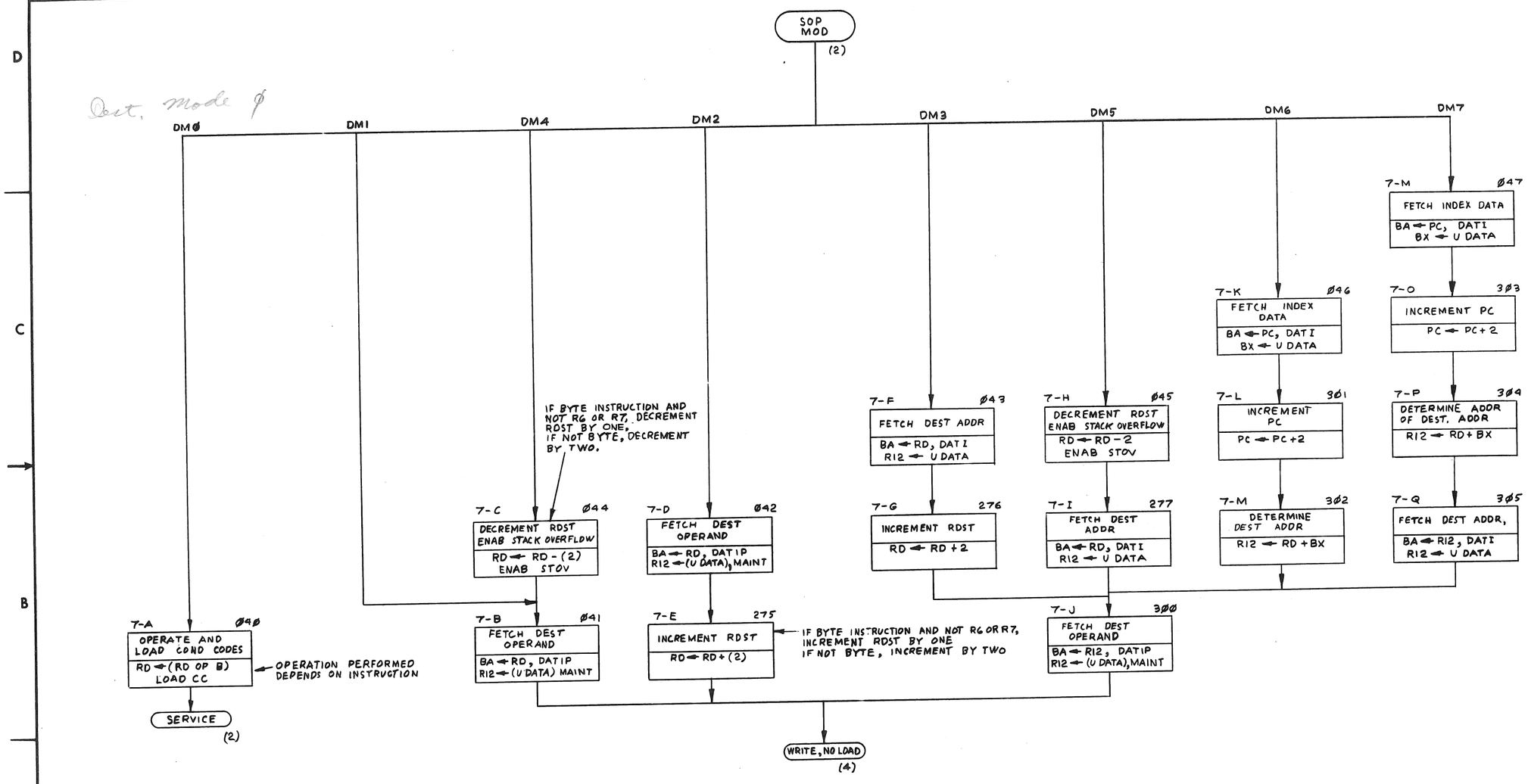

REVISIONS		
CHK	CHANGE NO.	REV.

TITLE: KDIIE FLOW DIAGRAMS

SIZE: D | CODE: FD | NUMBER: KDII-E-I | REV.

SCALE: — | SHEET 7 OF 26 | DIST.

DEC FORM NO. DRD 138

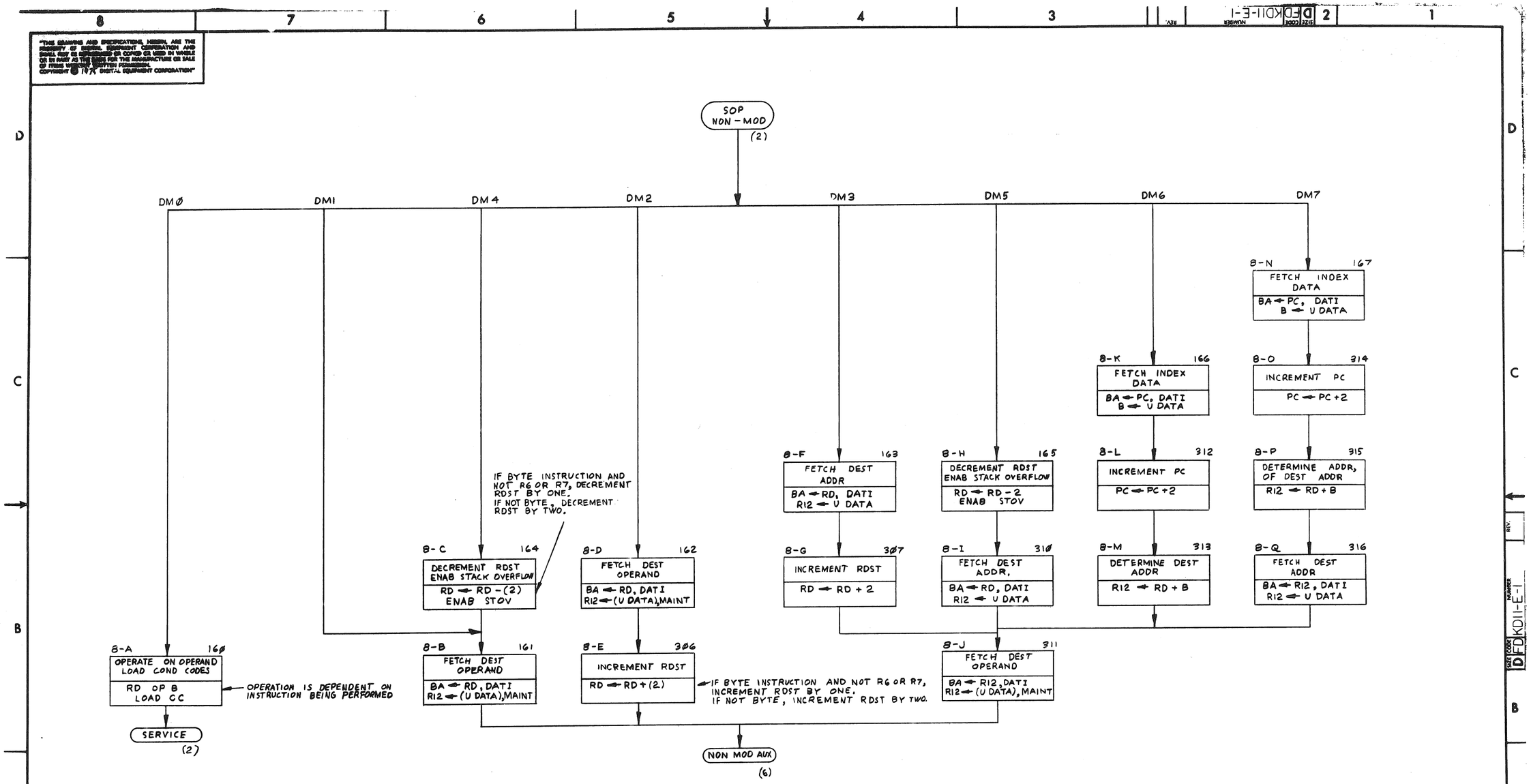

REVISIONS		
CHK	CHANGE NO.	REV.

TITLE	SIZE	CODE	NUMBER	REV.
KDI IE FLOW DIAGRAM	D	FD	KDII-E-I	
SCALE —	SHEET 8 OF 26	DIST.		

DEC FORM NO. DRD 125

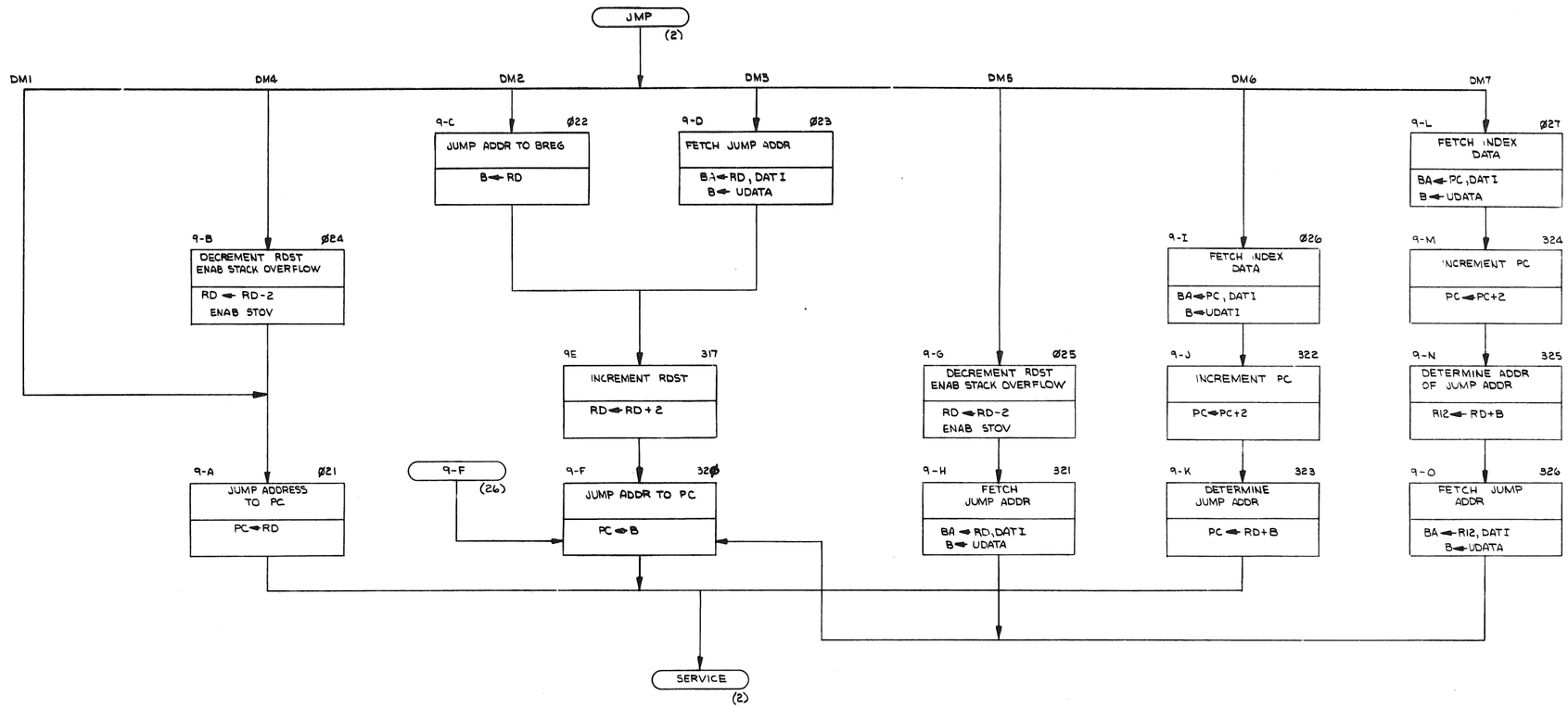

REVISIONS		
CHK	CHANGE NO.	REV.

TITLE: KDIIE FLOW DIAGRAMS

SCALE: —/—/— | SHEET 9 OF 26 | SIZE D | CODE FD | NUMBER KDII-E-1 | REV. | DIST.

DEC FORM NO. DRD 138

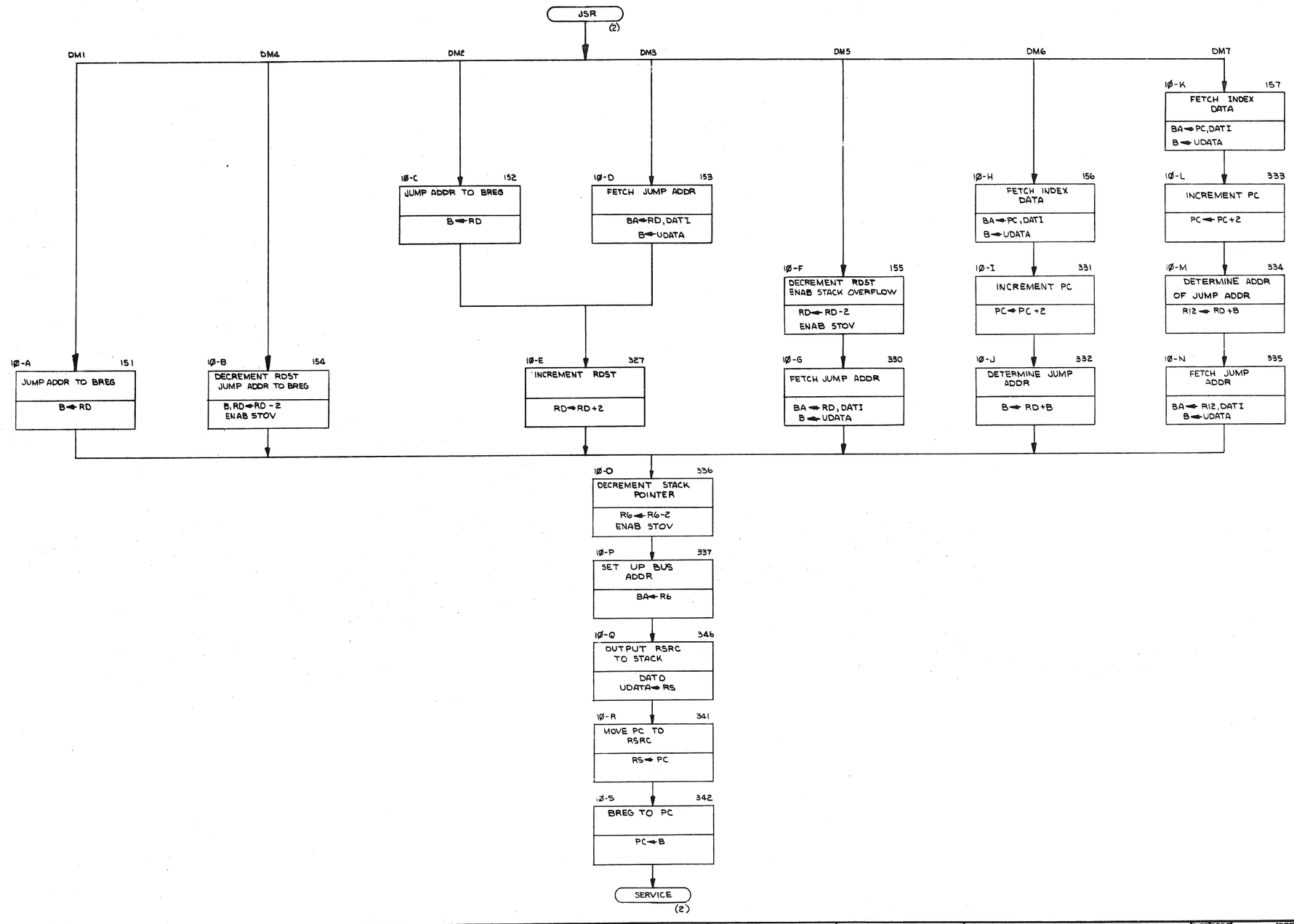

REVISIONS		
CHK	CHANGE NO.	REV.

TITLE	SIZE	CODE	NUMBER	REV.
KDIIE FLOW DIAGRAMS	D	FD	KDII-E-1	
SCALE —	SHEET 10 OF 26	DIST.		

DEC FORM NO. DRD 133

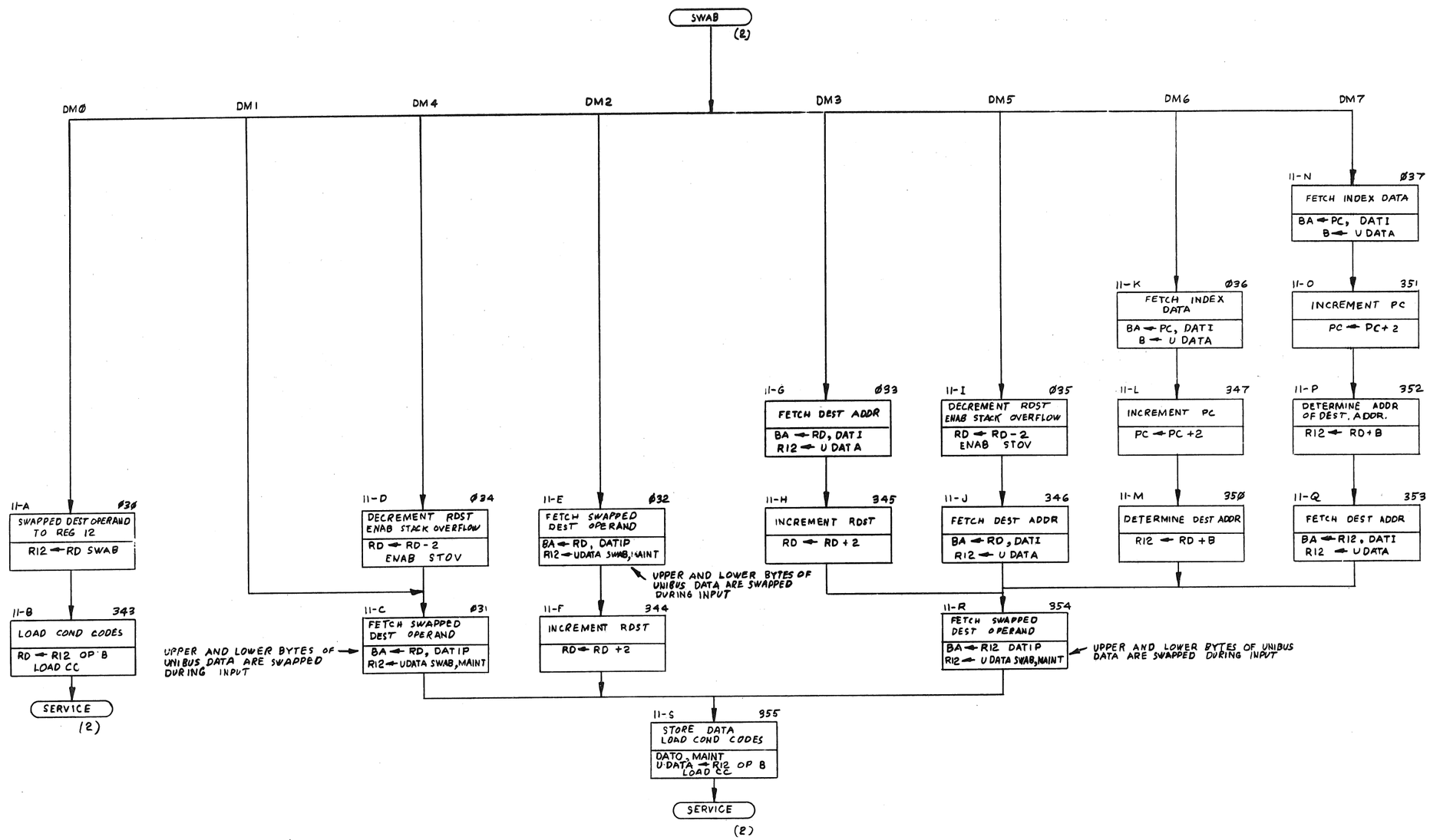

REVISIONS		
CHK	CHANGE NO.	REV.

TITLE	SIZE	CODE	NUMBER	REV.
KDII E FLOW DIAGRAMS	D	FD	KDII-E-I	
SCALE — / —	SHEET 11 OF 26	DIST.		

DEC FORM NO. DRD 138

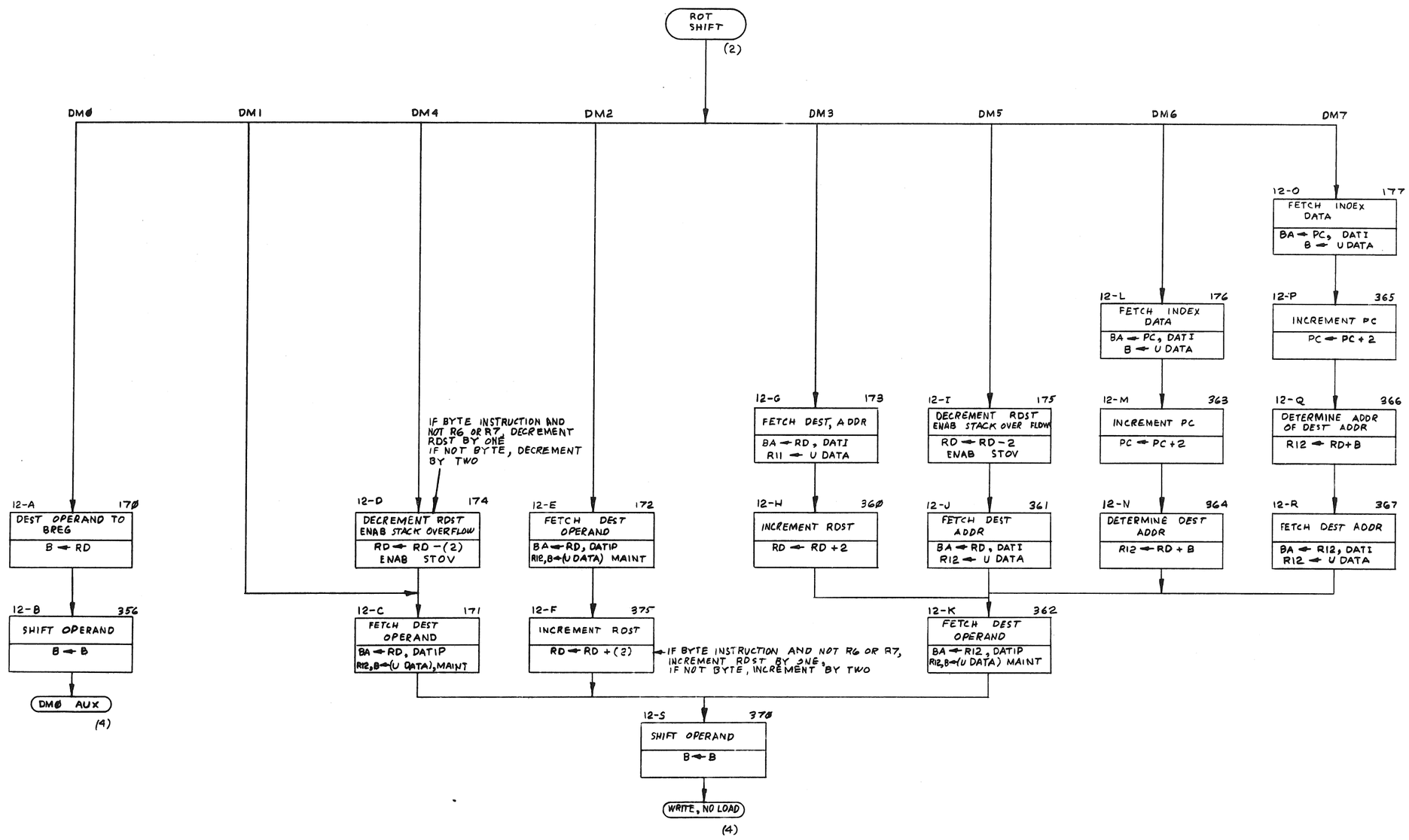

REVISIONS		
CHK	CHANGE NO.	REV.

TITLE: KD11E FLOW DIAGRAMS

SIZE D | CODE FD | NUMBER KD11-E-1 | REV.

SCALE — | SHEET 12 OF 26 | DIST.

DEC FORM NO. DRD 128

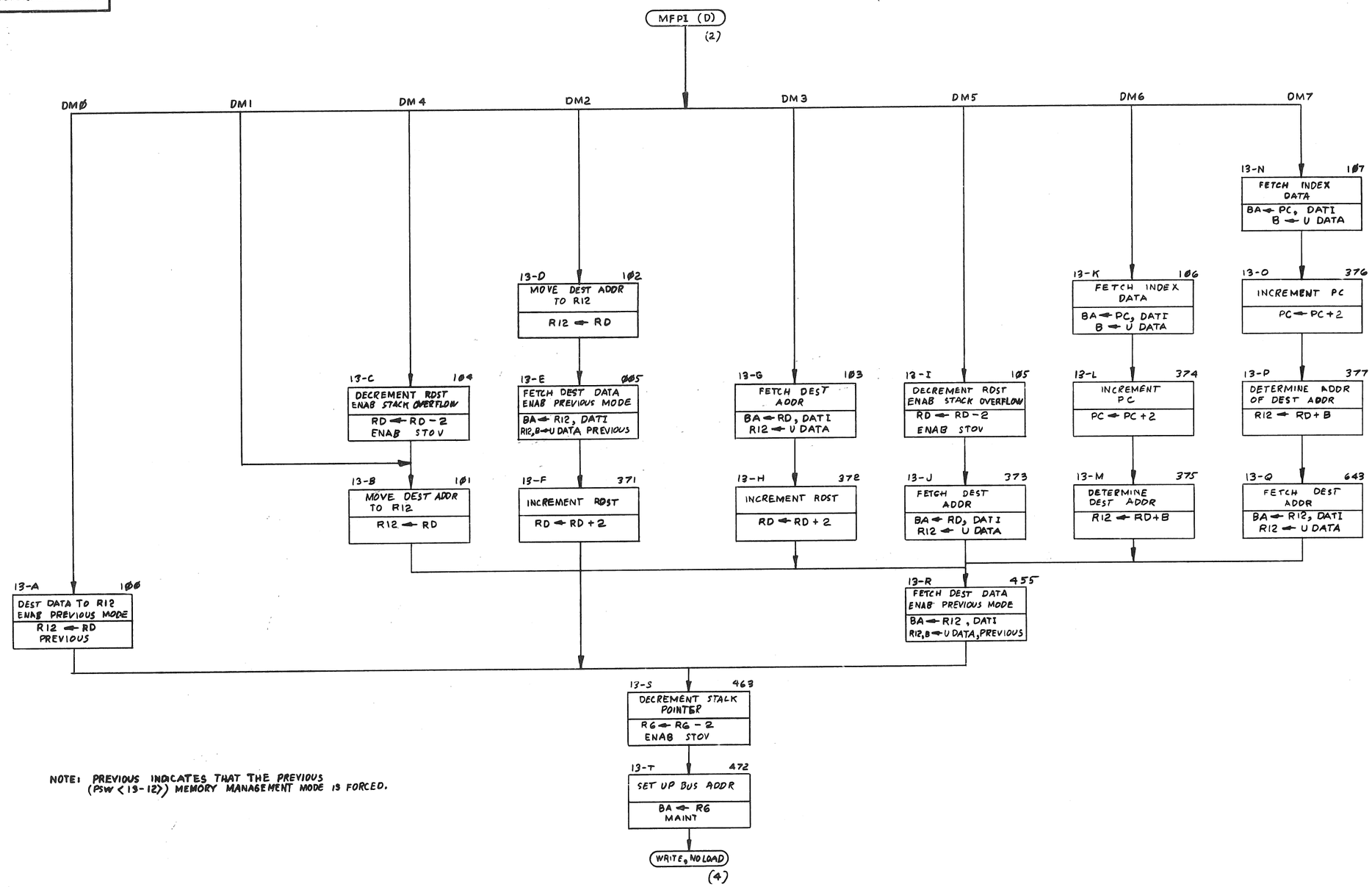

NOTE: PREVIOUS INDICATES THAT THE PREVIOUS (PSW <13-12>) MEMORY MANAGEMENT MODE IS FORCED.

REVISIONS		
CHK	CHANGE NO.	REV.

TITLE KDIIE FLOW DIAGRAMS

SIZE D CODE FD NUMBER KDII-E-I REV.

SCALE — SHEET 13 OF 26 DIST.

DEC FORM NO. DRD 135

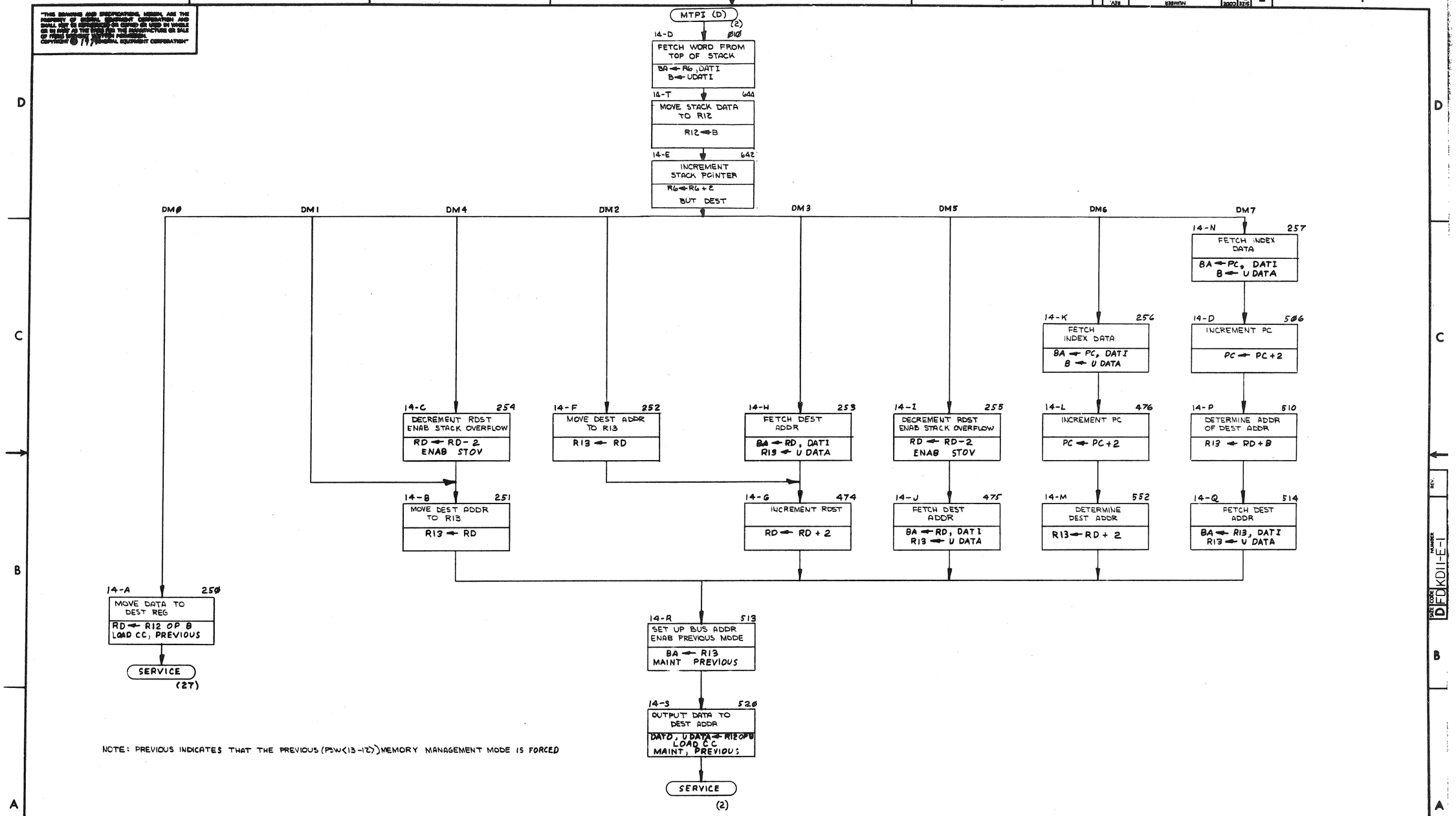

NOTE: PREVIOUS INDICATES THAT THE PREVIOUS (PSW<13-12>) MEMORY MANAGEMENT MODE IS FORCED

REVISIONS		
CHK	CHANGE NO.	REV.

TITLE	SIZE	CODE	NUMBER	REV.
KDIIE FLOW DIAGRAMS	D	FD	KDII-E-1	
SCALE —	SHEET 14 OF 26		DIST.	

DEC FORM NO. DRD 1B9

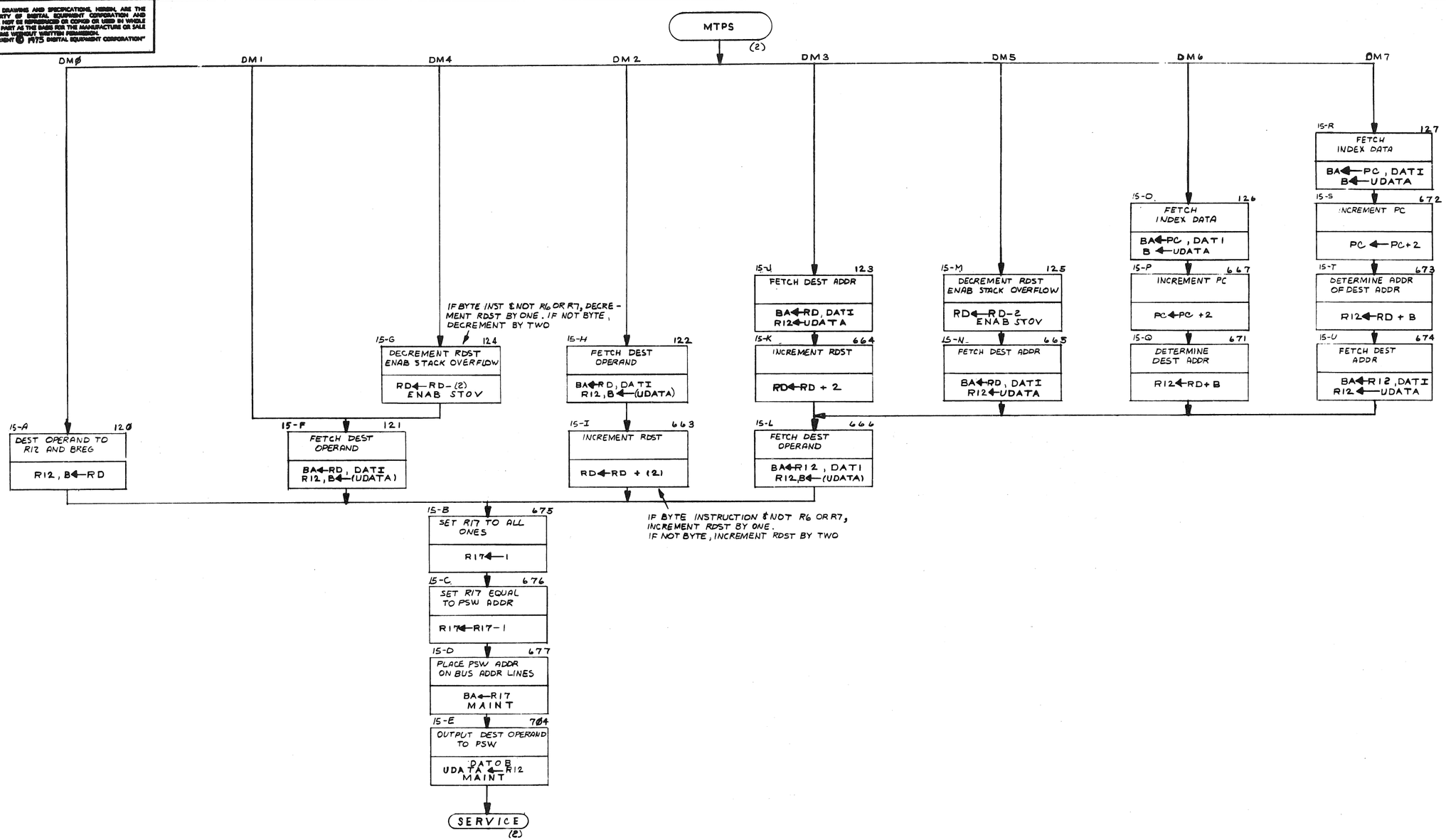

REVISIONS		
CHK	CHANGE NO.	REV.

TITLE	SIZE	CODE	NUMBER	REV.
KDIIE FLOW DIAGRAMS	D	FD	KDII-E-1	
SCALE —	SHEET 15 OF 26	DIST.		

DEC FORM NO. DRD 138

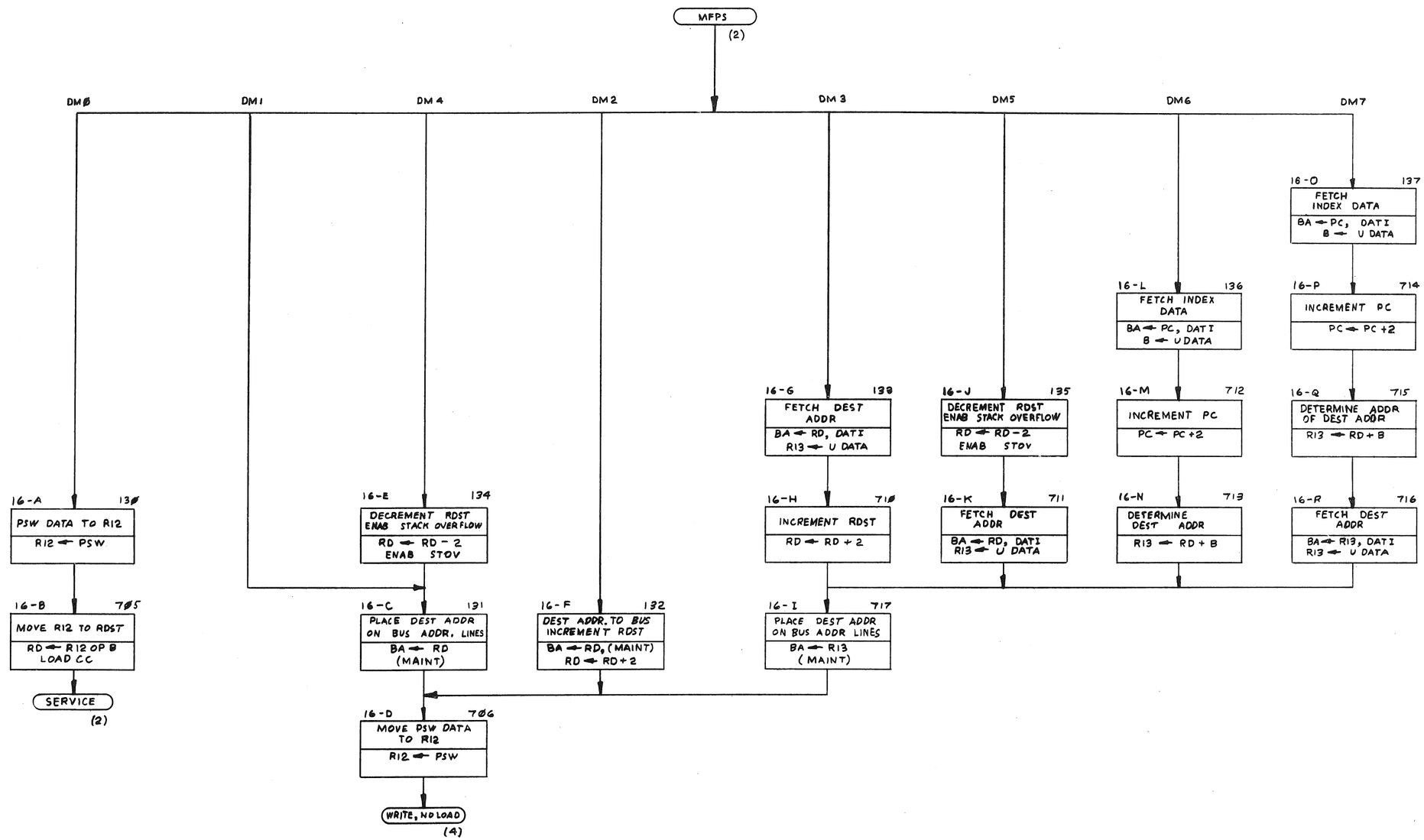

REVISIONS		
CHK	CHANGE NO.	REV.

TITLE: KDIIE FLOW DIAGRAMS

SIZE CODE: D FD

NUMBER: KDII-E-I

REV.

SCALE: —/—

SHEET 16 OF 26

DIST.

DEC FORM NO. DID 139

S.S.M. F-135

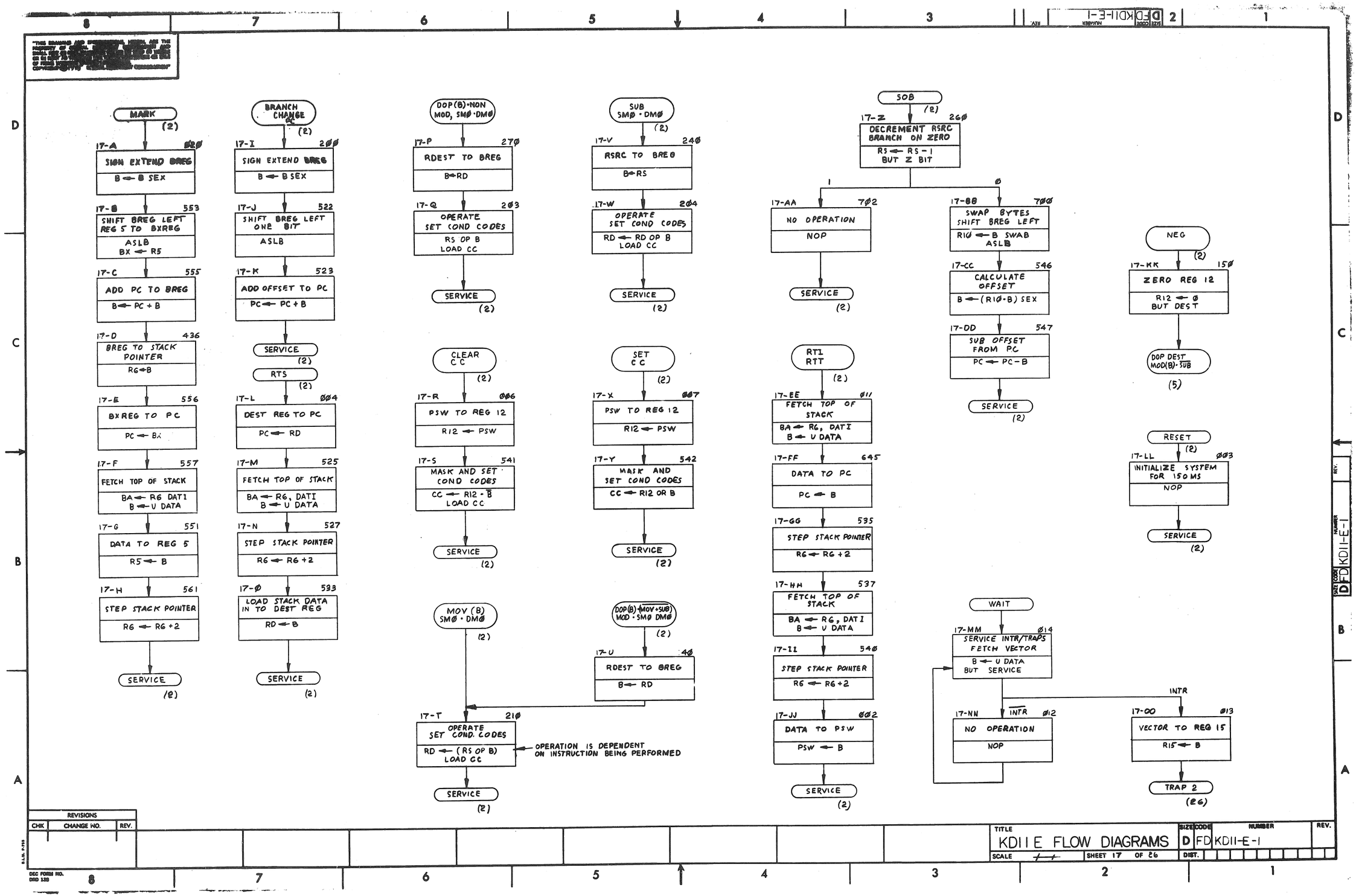

REVISIONS		
CHK	CHANGE NO.	REV.

TITLE: KDII E FLOW DIAGRAMS

SIZE D | CODE FD | NUMBER KDII-E-1 | REV.

SCALE — | SHEET 17 OF 26 | DIST.

DEC FORM NO. DRD 133

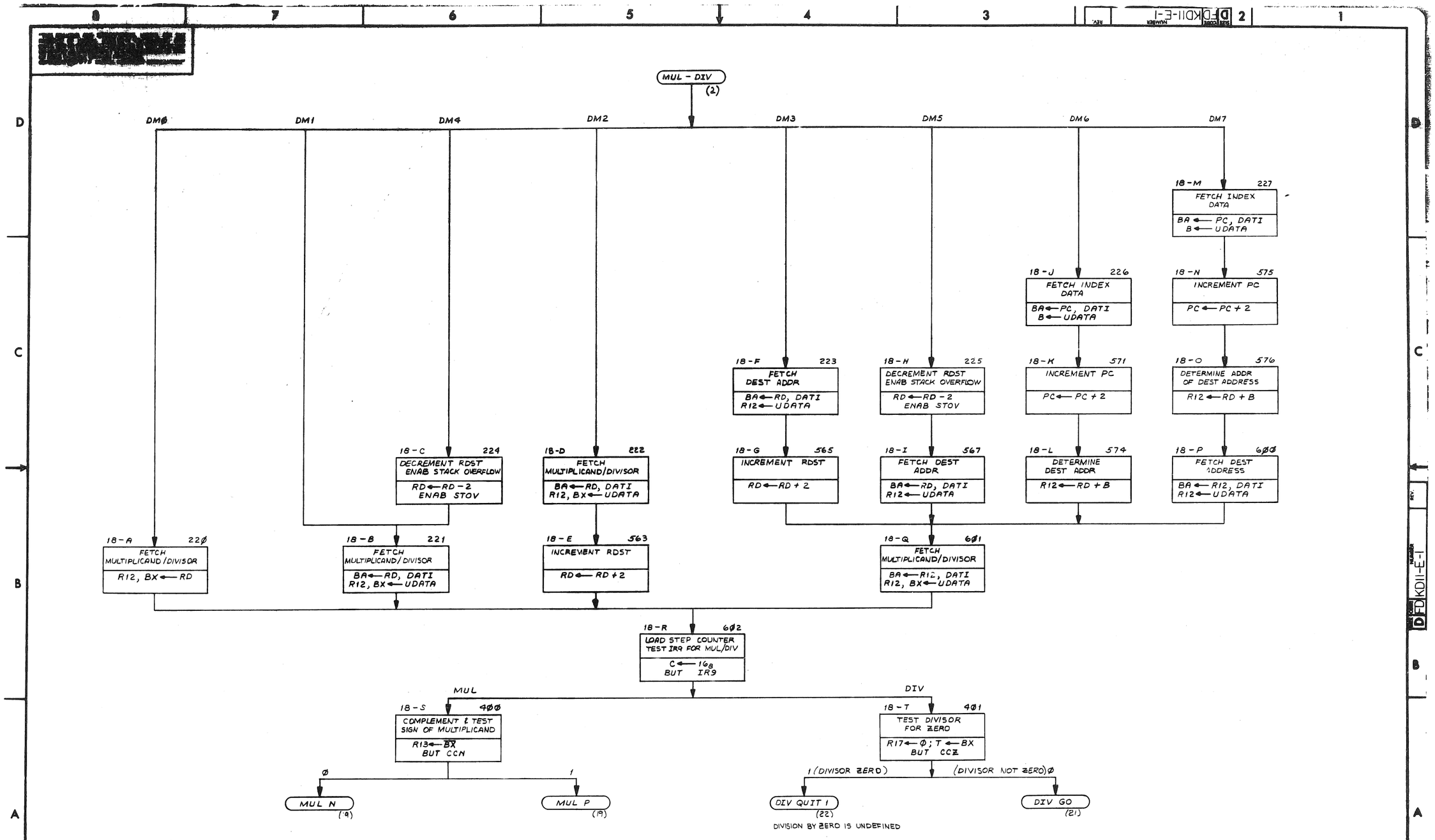

REVISIONS		
CHK	CHANGE NO.	REV.

TITLE: KDIIE FLOW DIAGRAMS

SIZE: D | CODE: FD | NUMBER: KDII-E-I | REV.

SCALE: — | SHEET 18 OF 26 | DIST.

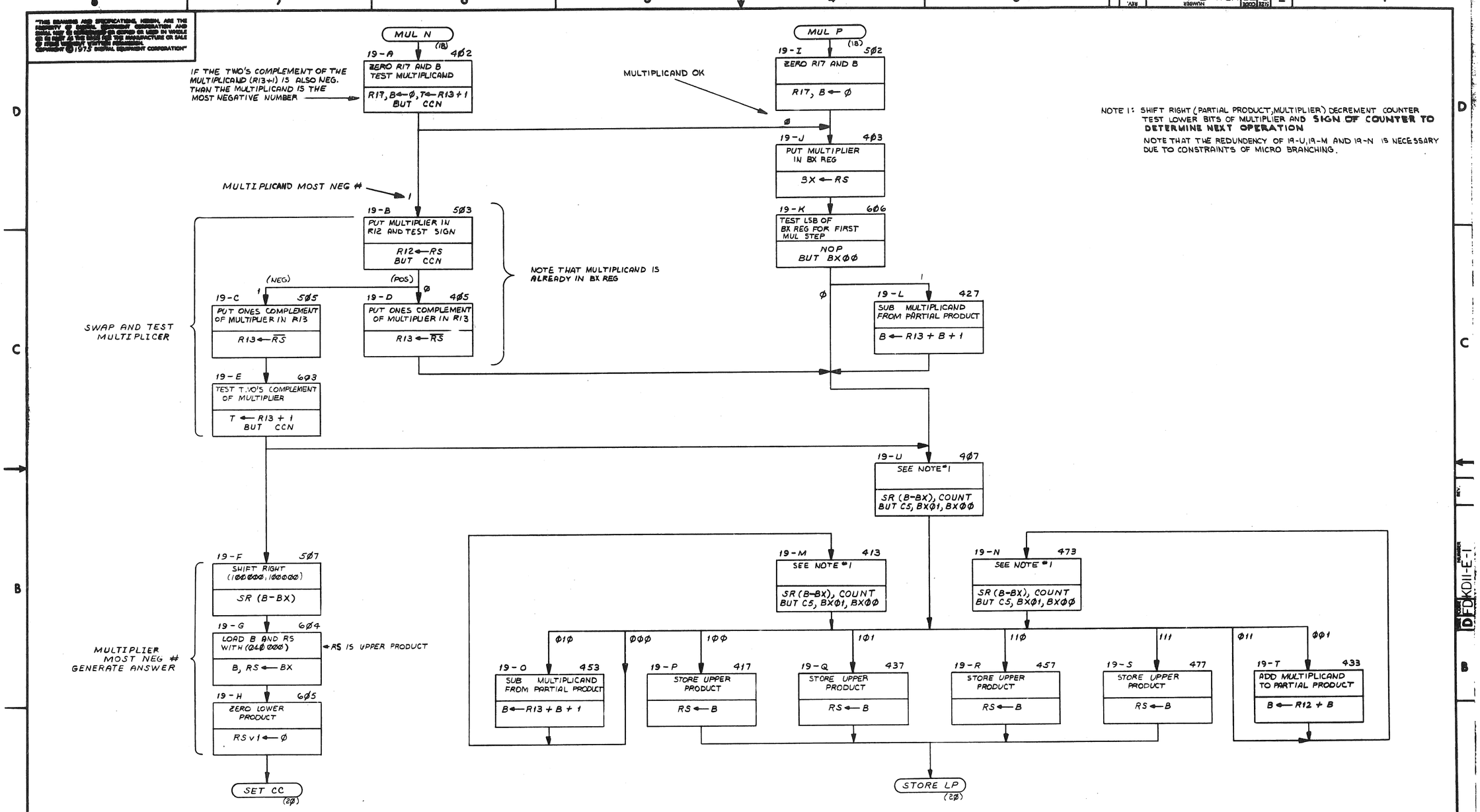

NOTE 1: SHIFT RIGHT (PARTIAL PRODUCT, MULTIPLIER) DECREMENT COUNTER TEST LOWER BITS OF MULTIPLIER AND **SIGN OF COUNTER TO DETERMINE NEXT OPERATION**

NOTE THAT THE REDUNDENCY OF 19-U, 19-M AND 19-N IS NECESSARY DUE TO CONSTRAINTS OF MICRO BRANCHING.

REVISIONS		
CHK	CHANGE NO.	REV.

TITLE	SIZE	CODE	NUMBER	REV.
KDIIE FLOW DIAGRAMS	D	FD	KDII-E-I	
SCALE —	SHEET 19 OF 26		DIST.	

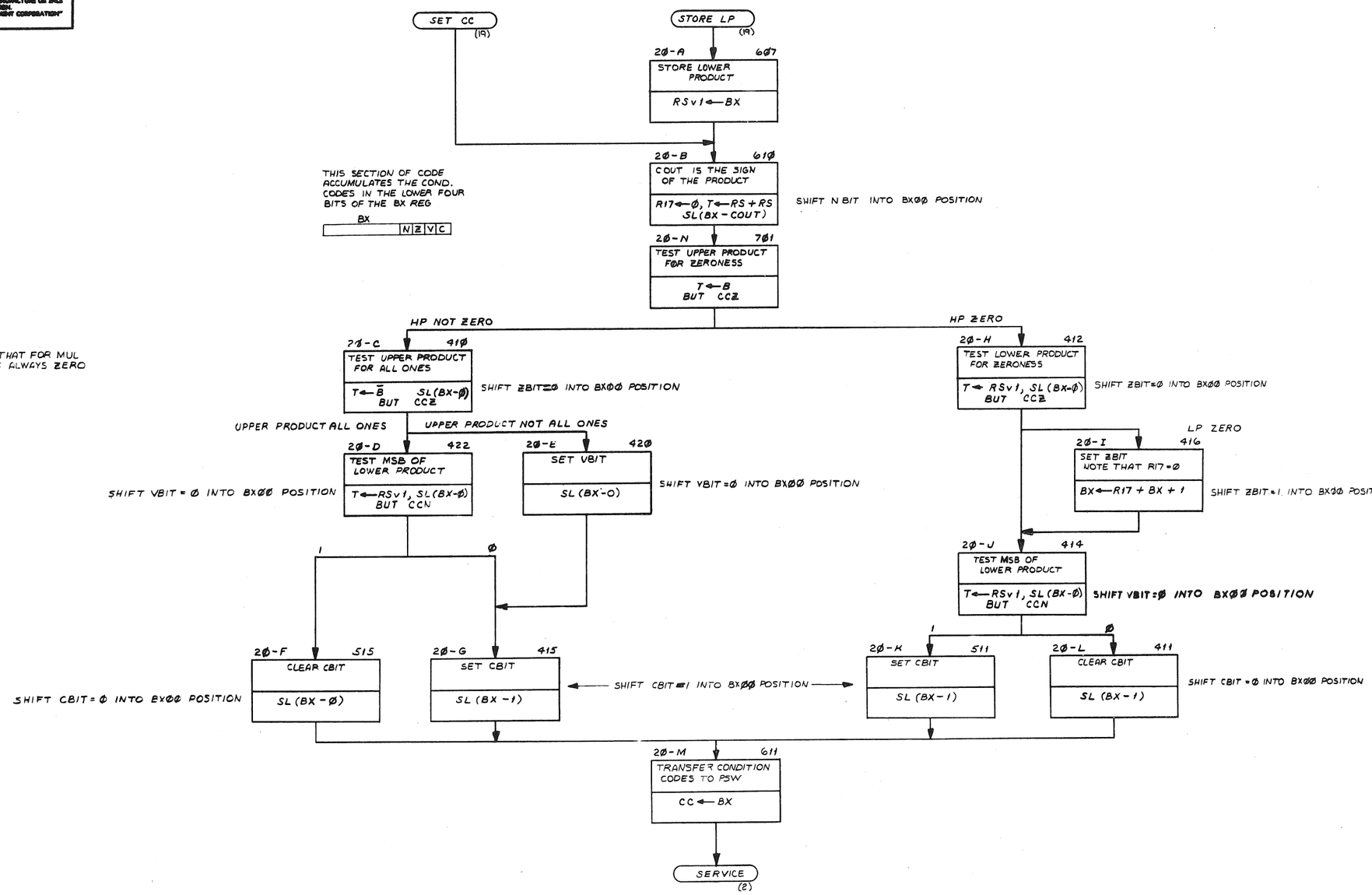

REVISIONS		
CHK	CHANGE NO.	REV.

TITLE	SIZE	CODE	NUMBER	REV.
KDIIE FLOW DIAGRAMS	D	FD	KDII-E-I	
SCALE —	SHEET 20 OF 26	DIST.		

DEC FORM NO. DRD 125

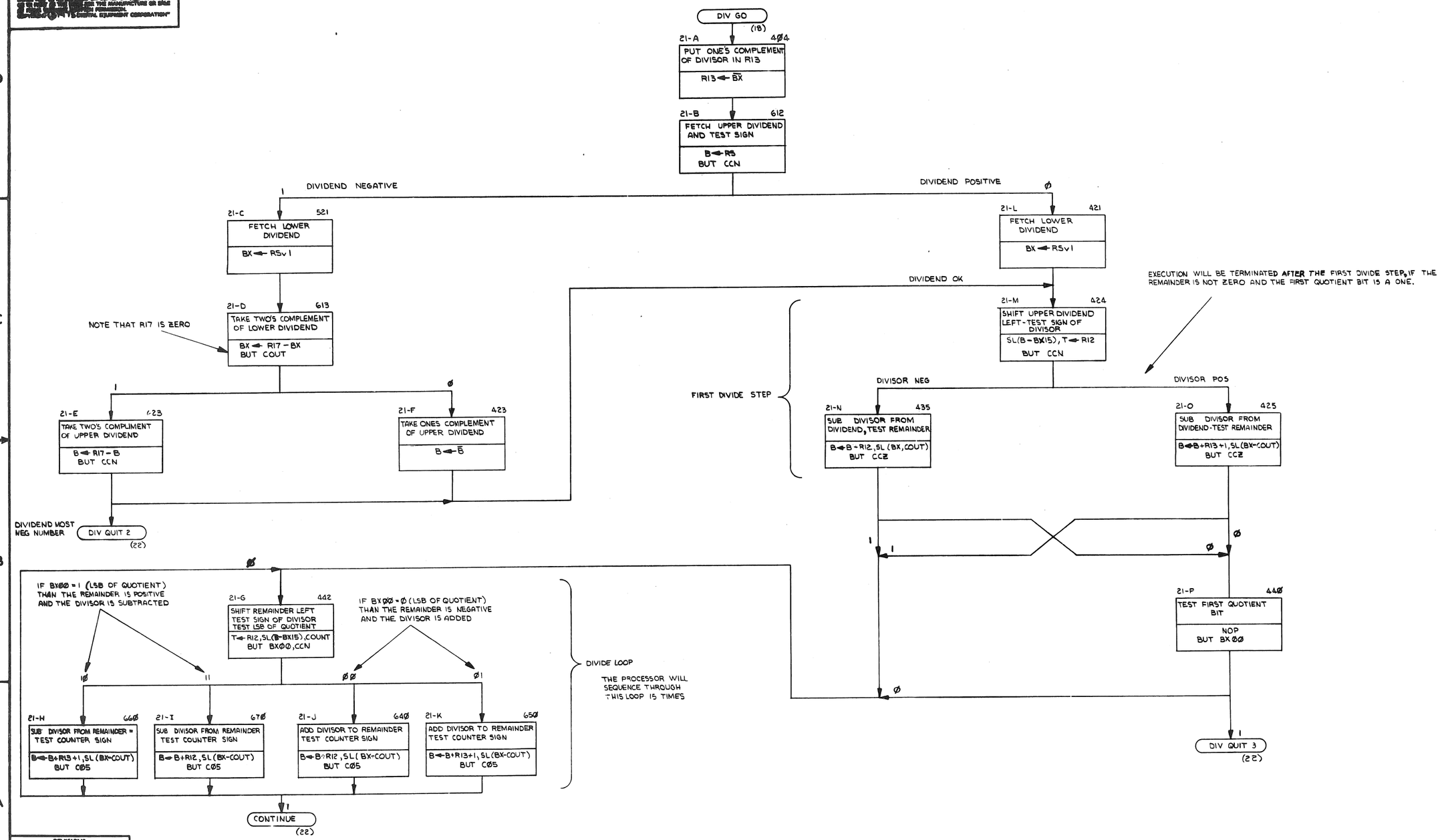

REVISIONS		
CHK	CHANGE NO.	REV.

TITLE	SIZE	CODE	NUMBER	REV.
KDIIE FLOW DIAGRAMS	D	FD	KDII-E-I	
SCALE —	SHEET 21 OF 26	DIST.		

DEC FORM 320
DRD 1.1B

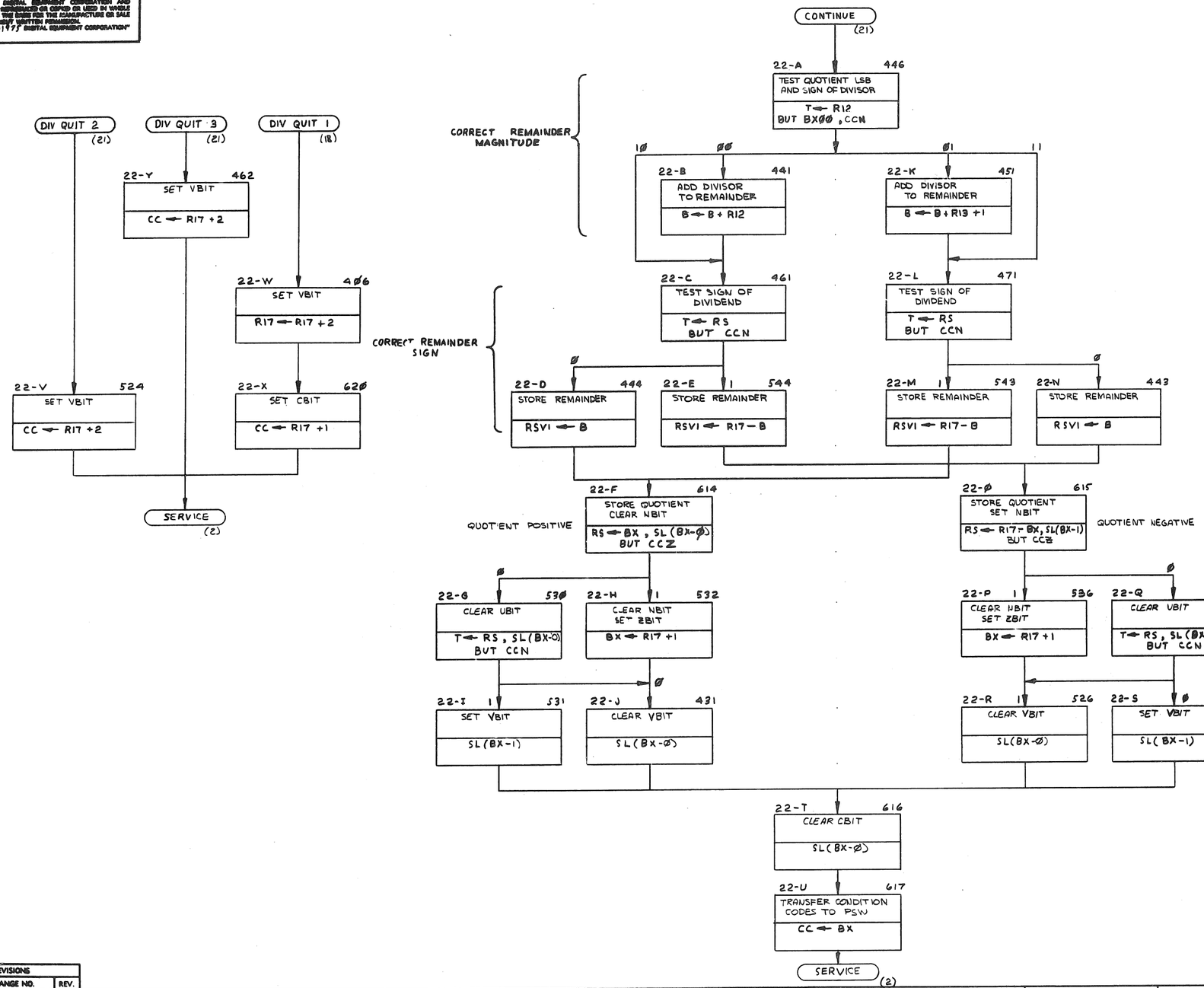

REVISIONS		
CHK	CHANGE NO.	REV.

TITLE	SIZE	CODE	NUMBER	REV.
KDIIE FLOW DIAGRAMS	D	FD	KDII-E-1	
SCALE —	SHEET 22 OF 26	DIST.		

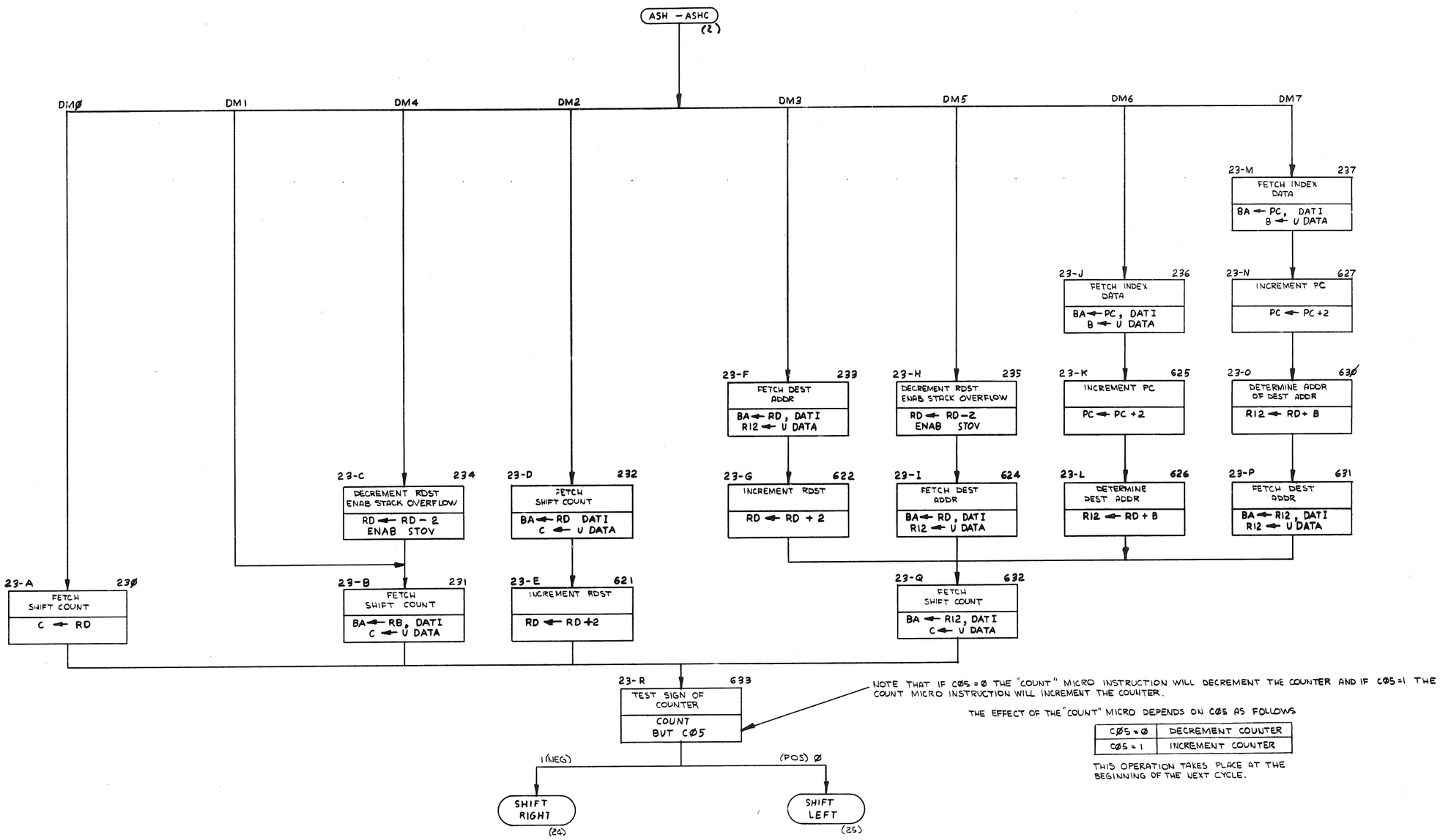

NOTE THAT IF C05 = 0 THE "COUNT" MICRO INSTRUCTION WILL DECREMENT THE COUNTER AND IF C05 = 1 THE COUNT MICRO INSTRUCTION WILL INCREMENT THE COUNTER.

THE EFFECT OF THE "COUNT" MICRO DEPENDS ON C05 AS FOLLOWS

C05 = 0	DECREMENT COUNTER
C05 = 1	INCREMENT COUNTER

THIS OPERATION TAKES PLACE AT THE BEGINNING OF THE NEXT CYCLE.

REVISIONS		
CHK	CHANGE NO.	REV.

TITLE: KDIIE FLOW DIAGRAMS

SIZE D | CODE FD | NUMBER KDII-E-I | REV.

SCALE — | SHEET 23 OF 26 | DIST.

DEC FORM NO. DRD 123

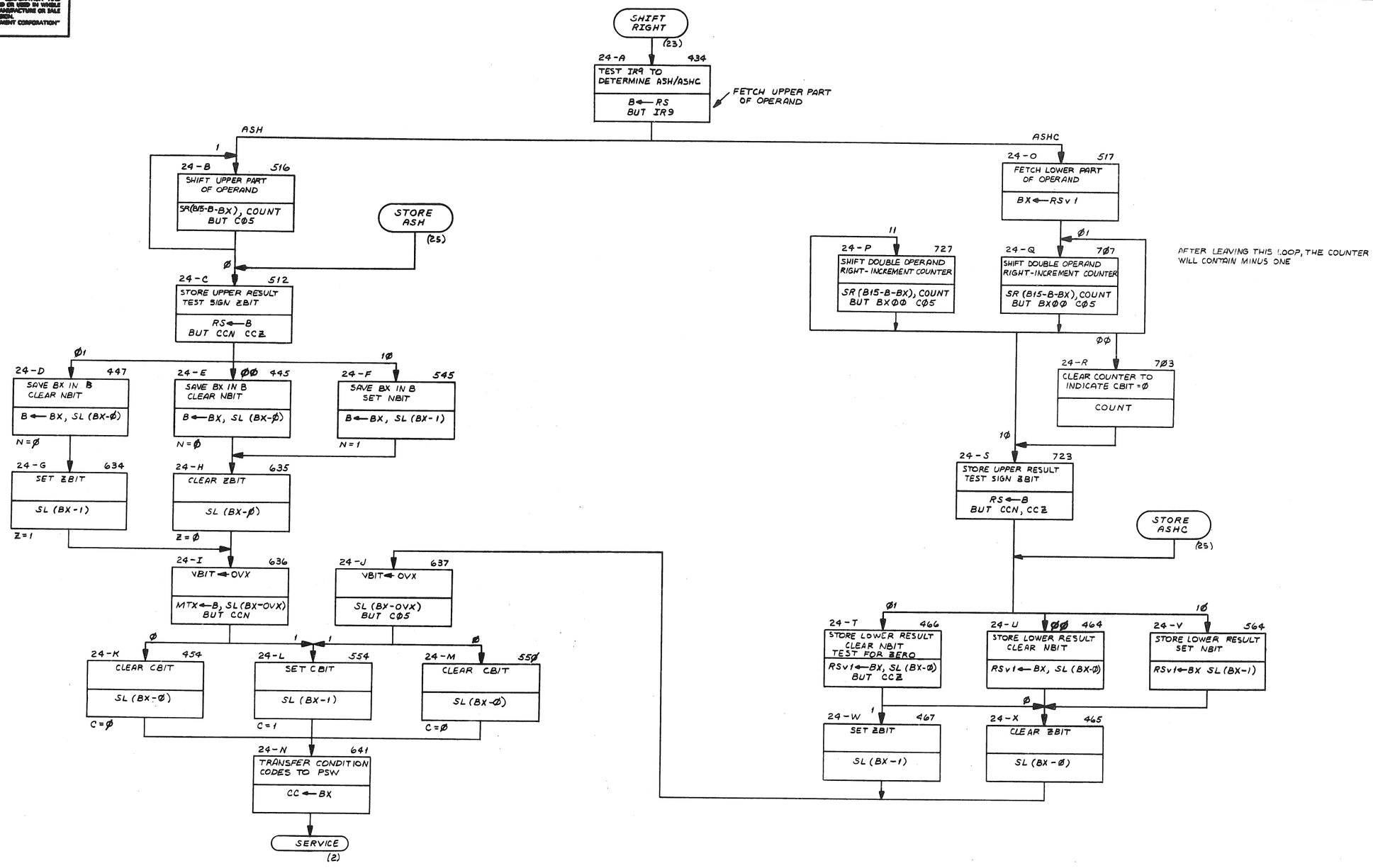

REVISIONS		
CHK	CHANGE NO.	REV.

TITLE	SIZE	CODE	NUMBER	REV.
KDIIE FLOW DIAGRAMS	D	FD	KDII-E-I	
SCALE —	SHEET 24 OF 26	DIST.		

DEC FORM NO. DRD 189

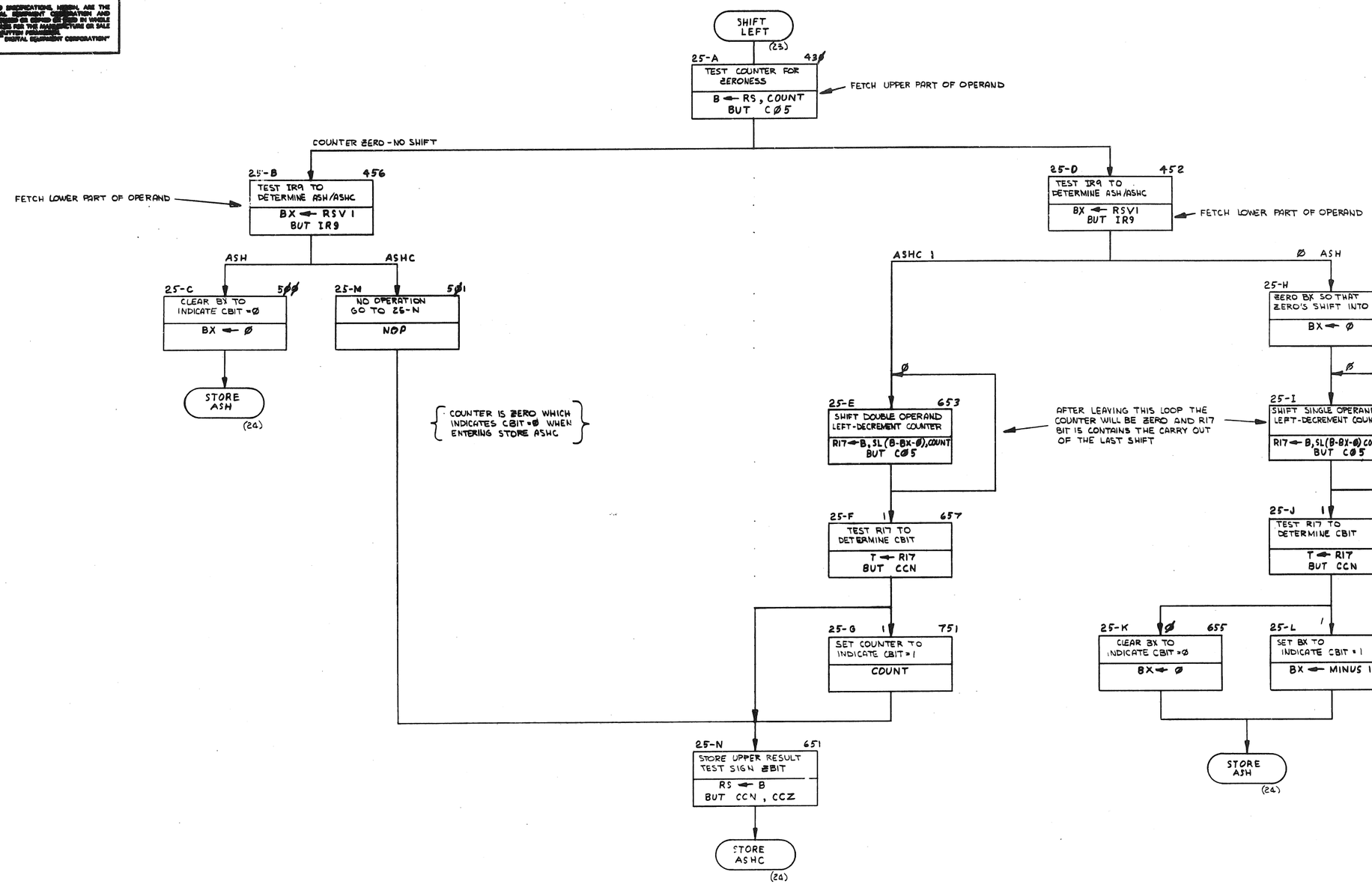

REVISIONS		
CHK	CHANGE NO.	REV.

TITLE	SIZE	CODE	NUMBER	REV.
KDIIE FLOW DIAGRAMS	D	FD	KDII-E-1	
SCALE	SHEET 25 OF 26	DIST.		

DEC FORM NO. DRD 1205

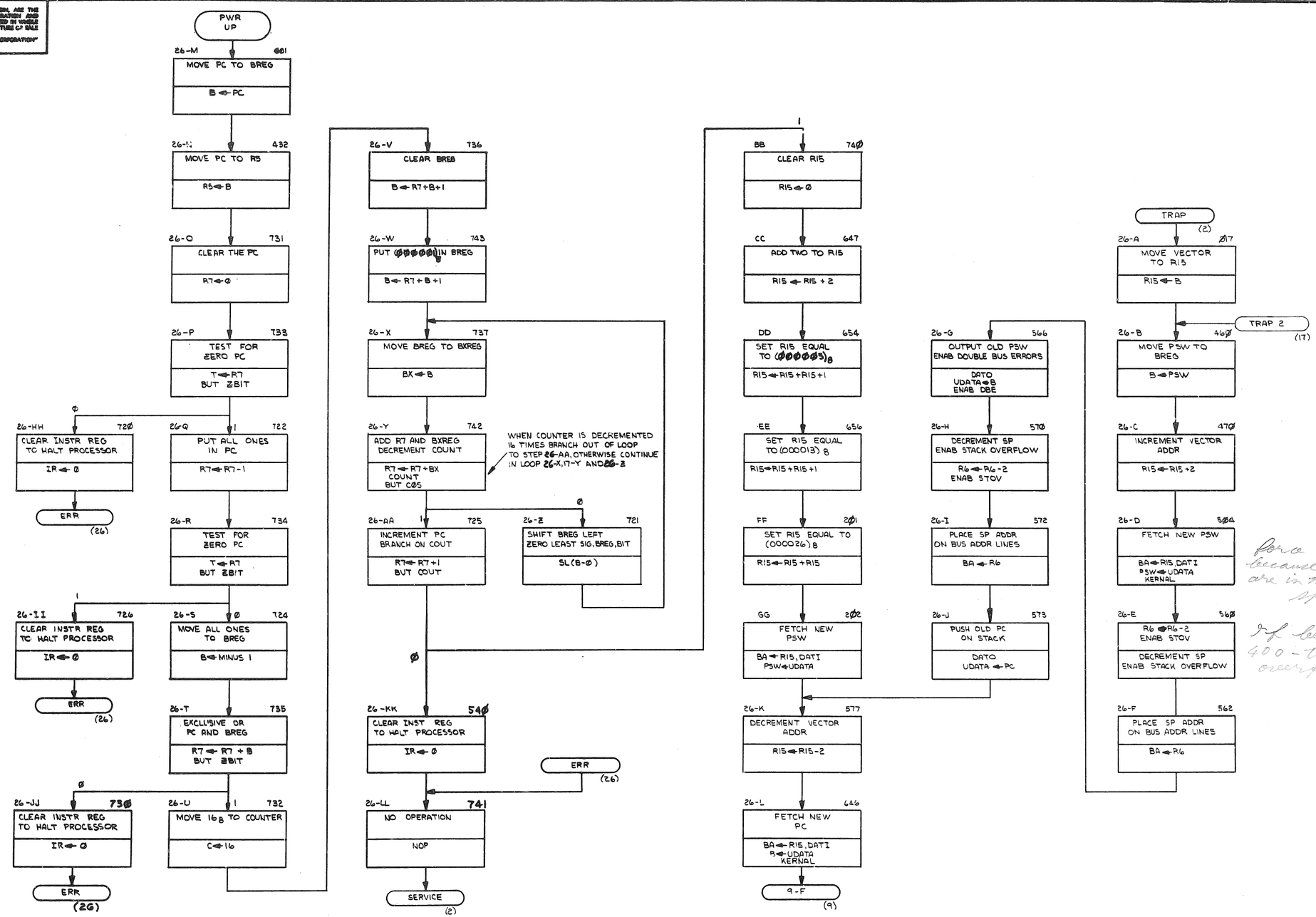

force kernal because ~~to~~ vectors are in kernal space

if below 400 - trap overflow stack

REVISIONS		
CHK	CHANGE NO.	REV.

TITLE	SIZE	CODE	NUMBER	REV.
KDIIE FLOW DIAGRAMS	D	FD	KDII-E-1	
SCALE —	SHEET 26 OF 26		DIST.	

DEC FORM NO. DND 139

NOTES:

2	E82, E83	IC DEC 74S37	1912746-00	51
1	E75	IC 256X4 BIT ROM OC	2316TA2	
1	E81	IC 256X4 BIT ROM OC	2316SA2	
1	E84	IC 256X4 BIT ROM OC	2316GA2	
1	E105	IC 256X4 BIT ROM TS	2316HA2	
A/R		WIRE, 30AWG GREEN	9105740-55	52

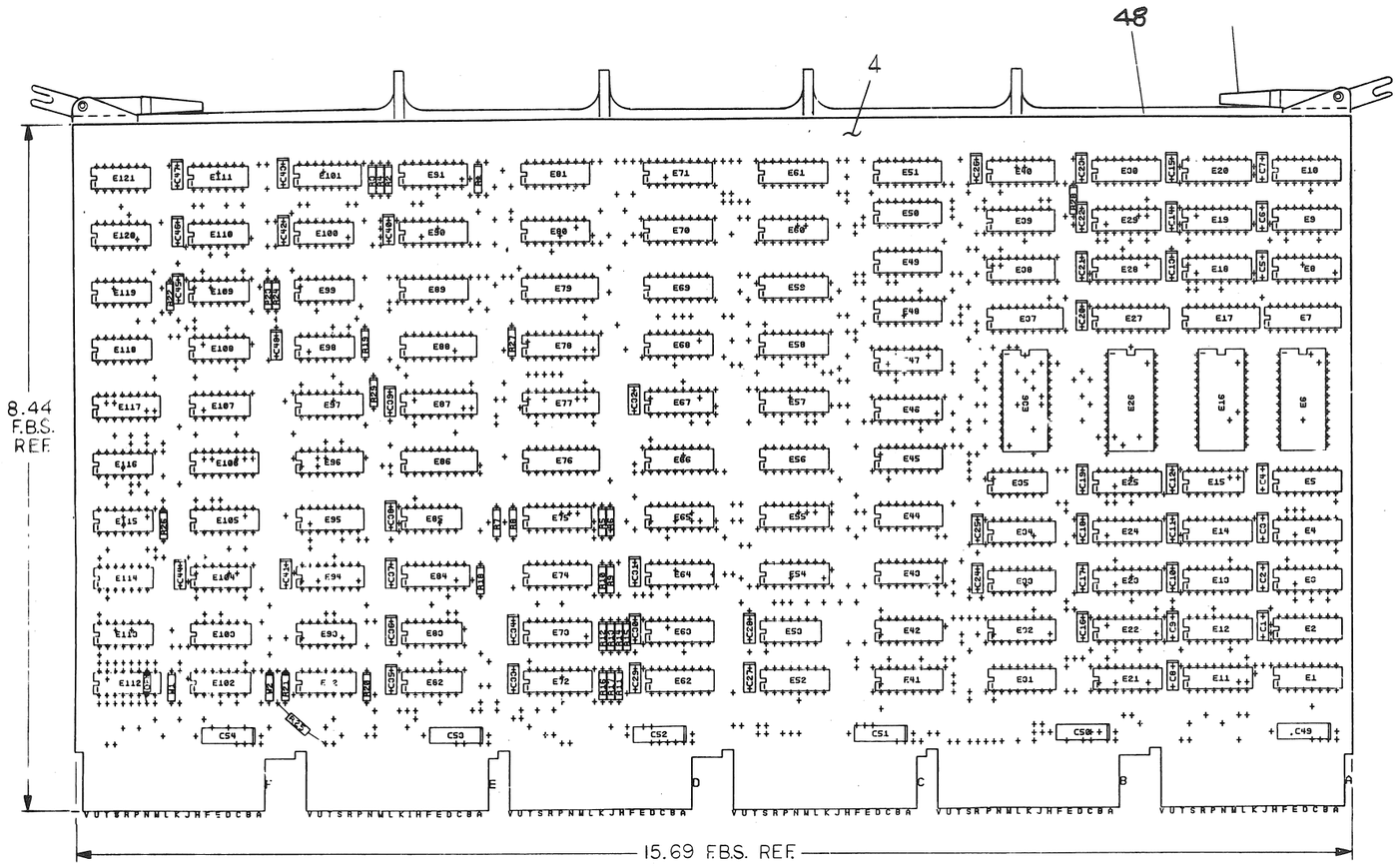

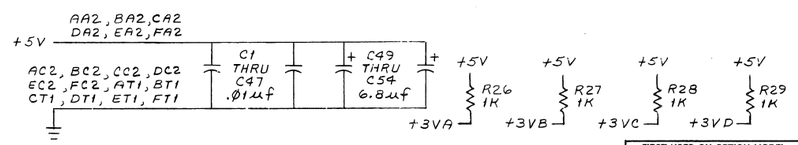

QTY	REF. DESIGNATION	DESCRIPTION	PART NO.	ITEM NO.
REF		X-Y COORDINATE HOLE LOCATION	K-CO-M7265-0-4	1
REF		ASSY/DRILLING HOLE LAYOUT	D-AH-M7265-0-5	2
REF		MODULE ECO HISTORY	B-MH-M7265-0-6	3
1		ETCHED CIRCUIT BOARD	5011620	4
47	C1 THRU C47	CAPACITOR, .01uf, 100V, 20%	1001610-01	5
6	C49 THRU C54	CAPACITOR, 6.8uf, 35V, 10%	1005306	6
1	C48	CAPACITOR, 220pf, 100V, 5%	1000021	7
1		HANDLE, HEX MODULE	1210711-02	8
19	R1 THRU R19	RESISTOR, 470 OHM, 1/4W, 5%	1300316	9
8	R20 THRU R23, R26 THRU R29	RESISTOR, 1K, 1/4W, 5%	1300365	10
1	R24	RESISTOR, 47 OHM, 1/4W, 5%	1300202	11
2	R25, R30 (RETROFIT)	RESISTOR, 220 OHM, 1/4W, 5%	1300271	12
1	E102	DELAY LINE, 150 NS	1812463	13
1	E120	I.C. DEC 7432	1911521	14
1	E121	I.C. DEC 7410	1905576	15
2	E99, E100	I.C. DEC 7402	1909004	16
1	E115	I.C. DEC 7404	1909086	17
2	E104, E110	I.C. DEC 7408	1910155	18
1	E108	I.C. DEC 7400	1905575	19
1	E118	I.C. DEC 74132	1911637	20
2	E53, E85	I.C. DEC 7430	1905578	21
1	E114	I.C. DEC 7437	1910091	22
2	E98, E107	I.C. DEC 74S74	1910844	23
2	E60, E61	I.C. DEC 7485	1910284	24
1	E113	I.C. DEC 7486	1910011	25
9	E1, E11, E21, E31, E41, E42, E52, E62, E63	I.C. DEC 8641	1911579	26
2	E15, E35	I.C. DEC 8815	1909713	27
3	E5, E8, E117	I.C. DEC 74153	1909937	28
5	E18, E28, E38, E90, E91	I.C. DEC 74157	1910855	29
4	E49, E50, E51, E71	I.C. DEC 74174	1910852	30
3	E80, E97, E101	I.C. DEC 74175	1910851	31
8	E9, E10, E19, E20, E29, E30, E39, E40	I.C. DEC 74194	1910823	32
3	E44, E55, E65	I.C. DEC 7483-A	1909932-01	33
3	E43, E54, E64	I.C. DEC 74298	1911271	34
1	E109	I.C. DEC 74H01-1	1909849	35
3	E93, E111, E116	I.C. DEC 74S00	1910532	36
1	E103	I.C. DEC 74S04	1910534	37
10	E3, E4, E12, E13, E23, E24, E32, E33, E34, E45	I.C. DEC 74S153	1910547	38
8	E2, E14, E22, E70, E89, E94, E96, E106	I.C. DEC 74S157	1910548	39
3	E46, E47, E48	I.C. DEC 74S174	1910550	40
4	E6, E16, E26, E36	I.C. DEC 74S181	1910531	41
1	E25	I.C. DEC 74S182	1912097	42
8	E56, E57, E58, E59, E66, E67, E68, E69	I.C. DEC 74LS253	1912646	43
11	E7, E17, E27, E37, E76, E77, E78, E79, E86, E87, E88	I.C. DEC 85S68	1912586	44
2	E92, E119	I.C. DEC 74S10	1910536	45
1	E95	I.C. DEC 74S175	1910947	46
2	E72, E73,	I.C. 256 X 4 BIT ROM OC	2316TA2	47
12		EYELET (HANDLE)	9006732	48
2	W1, W2	WIRE, JUMPER (INSULATED)	9009185	49
1	E74	I.C. 256 X 4 BIT ROM OC	2316GA2	50

FIRST USED ON OPTION MODEL

PARTS LIST

ETCH BOARD REV. C

I.C. DEC 74S181	12	24	
I.C. DEC 74S157	8	16	
I.C DEC 74S153	8	16	
I.C. DEC 74S175	8	16	
I.C. DEC 85S68	8	16	
I.C. DEC 74187	8	16	
I.C. DEC 74194	8	16	
I.C. DEC 74157	8	16	
I.C. DEC 74175	8	16	
I.C. DEC 74153	8	16	
I.C. DEC 7485	8	16	
I.C. DEC 8641	8	16	
IC TYPE	GND	+5V	

GND AND 5V ARE USUALLY PIN 7 AND 14 RESPECTIVELY EXCEPTIONS ARE STATED ABOVE

IC PIN LOCATIONS

I.C DEC 74S174	8	16	
I.C DEC 74298	8	16	
I.C DEC 74174	8	16	
I.C. DEC 7483	12		5
I.C. DEC 74S182	8	16	
I.C. DEC 74LS253	8	16	
IC TYPE	GND	+5V	-5V

REV.	CHANGE NO.	CHK	REVISIONS
C	M7265-00001	J. BLOEM	31 AUG. 76

DEC NO.	EIA NO.	DEC NO.	EIA NO.

SEMICONDUCTOR CONVERSION CHART

DRN. J. Vincent DATE 10-23-75
CHKD. DATE 12-1-75
ENG. DATE 12-1-75
MFG. ENG. DATE 12-1-75
PROD. DATE 12-1-75
NEXT HIGHER ASSY
SCALE
SHEET 1 OF 11

digital

TITLE KDIIE DATA PATH

SIZE D CODE CS NUMBER M7265-0-1 REV. C

DIST.

DEC FORM NO. DRD 135.8

4 BIT SLICE

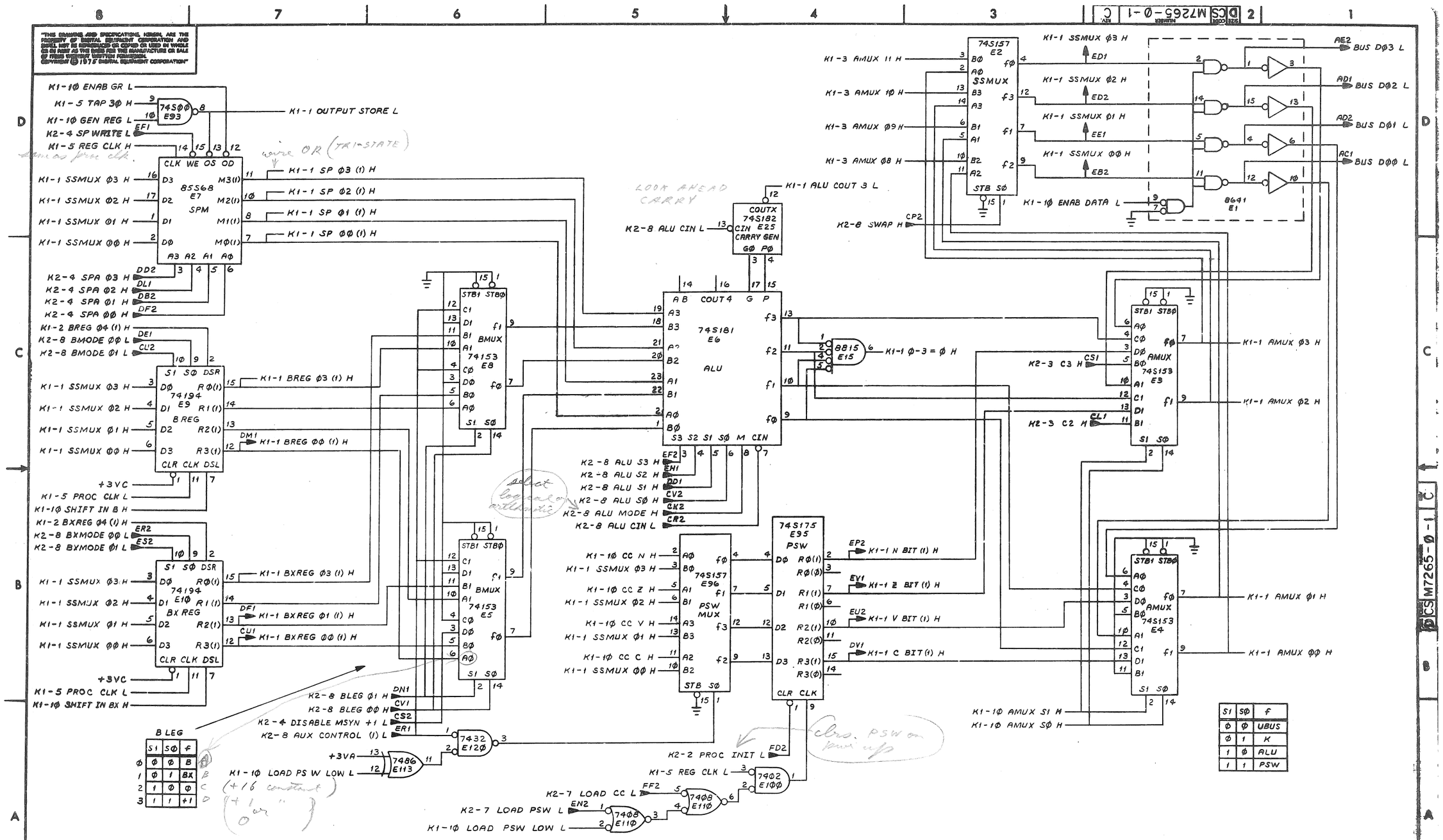
K1-10 ENAB GR L
K1-5 TAP 30 H
K1-10 GEN REG L
K2-4 SP WRITE L
K1-5 REG CLK H
74S00 E93
K1-1 OUTPUT STORE L
wire OR (TRI-STATE)
85S68 E7 SPM
K1-1 SSMUX 03 H
K1-1 SSMUX 02 H
K1-1 SSMUX 01 H
K1-1 SSMUX 00 H
K1-1 SP 03 (1) H
K1-1 SP 02 (1) H
K1-1 SP 01 (1) H
K1-1 SP 00 (1) H
K2-4 SPA 03 H
K2-4 SPA 02 H
K2-4 SPA 01 H
K2-4 SPA 00 H
K1-2 BREG 04 (1) H
K2-8 BMODE 00 L
K2-8 BMODE 01 L
74194 E9 BREG
K1-1 BREG 03 (1) H
K1-1 BREG 00 (1) H
+3VC
K1-5 PROC CLK L
K1-10 SHIFT IN B H
K1-2 BXREG 04 (1) H
K2-8 BXMODE 00 L
K2-8 BXMODE 01 L
74194 E10 BX REG
K1-1 BXREG 03 (1) H
K1-1 BXREG 01 (1) H
K1-1 BXREG 00 (1) H
K1-5 PROC CLK L
K1-10 SHIFT IN BX H
B LEG
74153 E8 BMUX
74153 E5 BMUX
K2-8 BLEG 01 H
K2-8 BLEG 00 H
K2-4 DISABLE MSYN +1 L
K2-8 AUX CONTROL (1) L
7432 E120
+3VA
7486 E113
K1-10 LOAD PS W LOW L
(+16 constant)
(+1 or 0)
LOOK AHEAD CARRY
K1-1 ALU COUT 3 L
K2-8 ALU CIN L
COUTX 74S182 E25 CARRY GEN
74S181 E6 ALU
K2-8 ALU S3 H
K2-8 ALU S2 H
K2-8 ALU S1 H
K2-8 ALU S0 H
K2-8 ALU MODE H
K2-8 ALU CIN L
select logic or arithmetic
8815 E15
K1-1 0-3 = 0 H
K1-10 CC N H
K1-1 SSMUX 03 H
K1-10 CC Z H
K1-1 SSMUX 02 H
K1-10 CC V H
K1-1 SSMUX 01 H
K1-10 CC C H
K1-1 SSMUX 00 H
74S157 E96 PSW MUX
74S175 E95 PSW
K1-1 N BIT (1) H
K1-1 Z BIT (1) H
K1-1 V BIT (1) H
K1-1 C BIT (1) H
K2-2 PROC INIT L
clrs. PSW on pwr up
K1-5 REG CLK L
7402 E100
K2-7 LOAD CC L
K2-7 LOAD PSW L
K1-10 LOAD PSW LOW L
7408 E110
74S157 E2 SSMUX
K1-3 AMUX 11 H
K1-3 AMUX 10 H
K1-3 AMUX 09 H
K1-3 AMUX 08 H
K1-1 SSMUX 03 H
K1-1 SSMUX 02 H
K1-1 SSMUX 01 H
K1-1 SSMUX 00 H
K1-10 ENAB DATA L
K2-8 SWAP H
8641 E1
BUS D03 L
BUS D02 L
BUS D01 L
BUS D00 L
K2-3 C3 H
K2-3 C2 H
74S153 E3 AMUX
74S153 E4 AMUX
K1-1 AMUX 03 H
K1-1 AMUX 02 H
K1-1 AMUX 01 H
K1-1 AMUX 00 H
K1-10 AMUX S1 H
K1-10 AMUX S0 H
S1 S0 F
0 0 UBUS
0 1 K
1 0 ALU
1 1 PSW
(DATA PATH 0-3)
TITLE KDIIE DATA PATH (K1-1)
SCALE —//—
SHEET 2 OF 11
D CS M7265-0-1
REVISIONS
CHK CHANGE NO. REV.

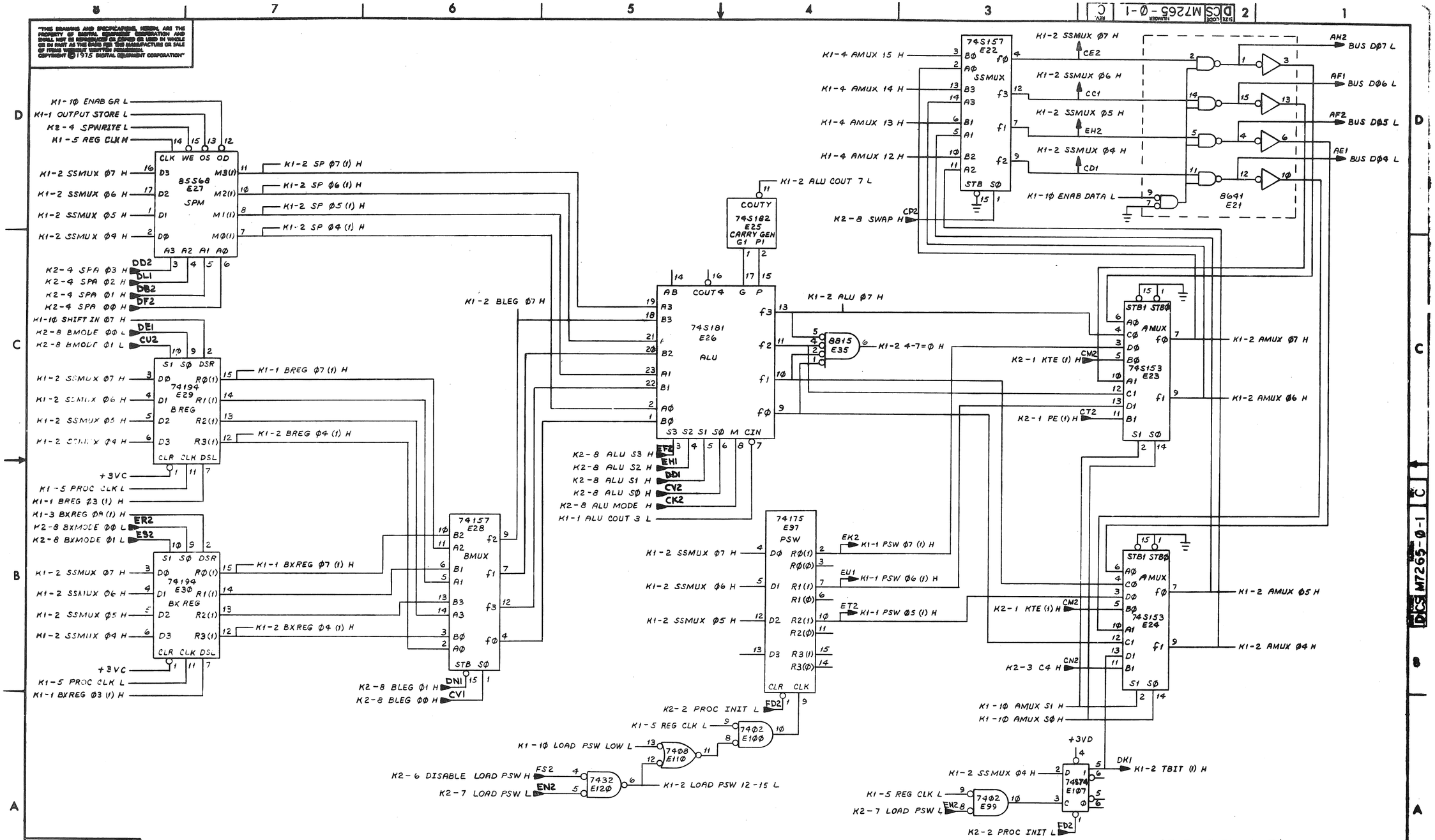

(DATA PATH 4-7)

REVISIONS		
CHK	CHANGE NO.	REV.

TITLE	SIZE	CODE	NUMBER	REV.
KD11E DATA PATH (K1-2)	D	CS	M7265-0-1	C
SCALE — SHEET 3 OF 11	DIST.			

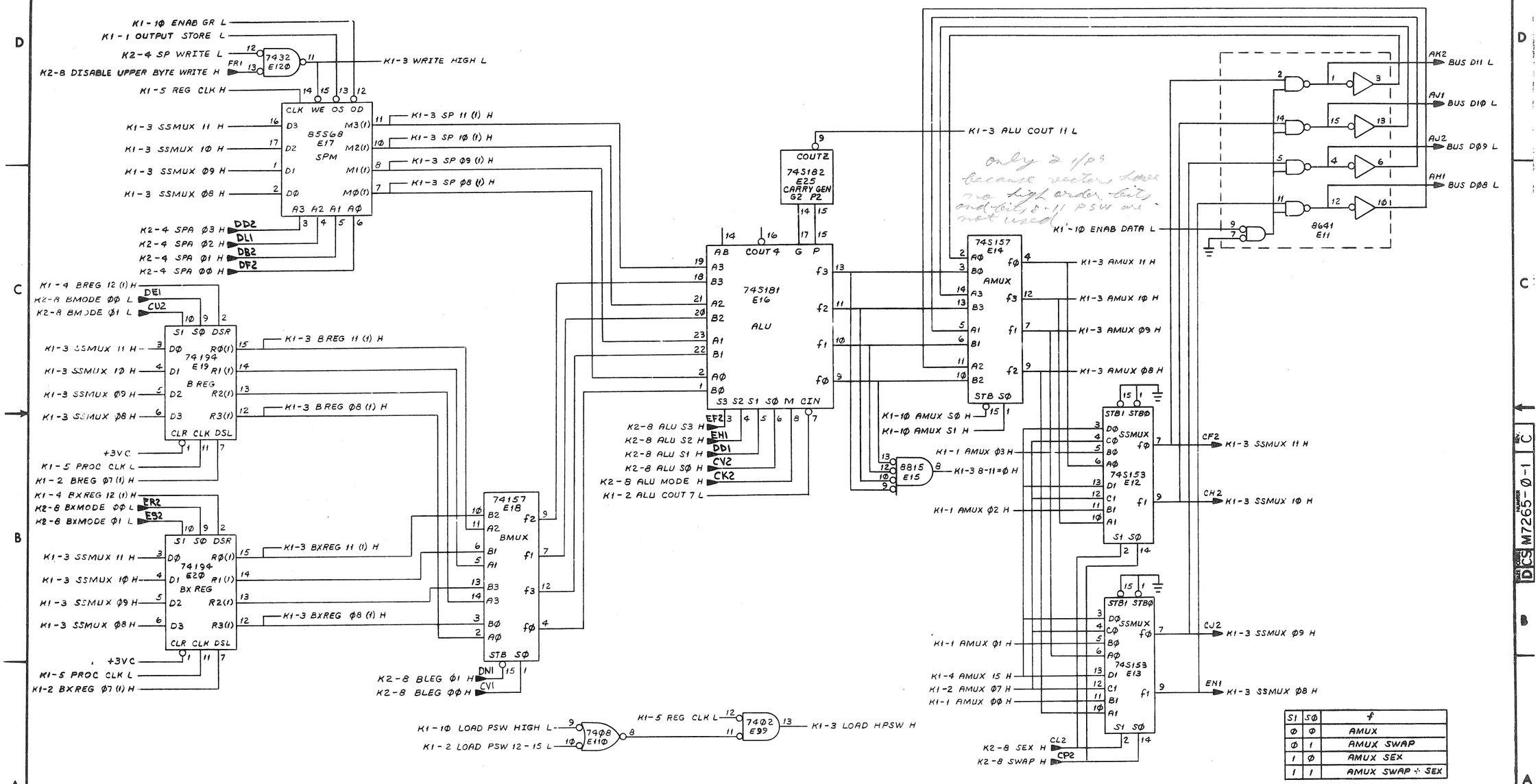

S1	S0	f
0	0	AMUX
0	1	AMUX SWAP
1	0	AMUX SEX
1	1	AMUX SWAP + SEX

(DATA PATH 8-11)

REVISIONS		
CHK	CHANGE NO.	REV.

TITLE	SIZE	CODE	NUMBER	REV.
KD11E DATA PATH (K1-3)	D	CS	M7265-0-1	C
SCALE —	SHEET 4 OF 11	DIST.		

DEC FORM NO. DRD 139

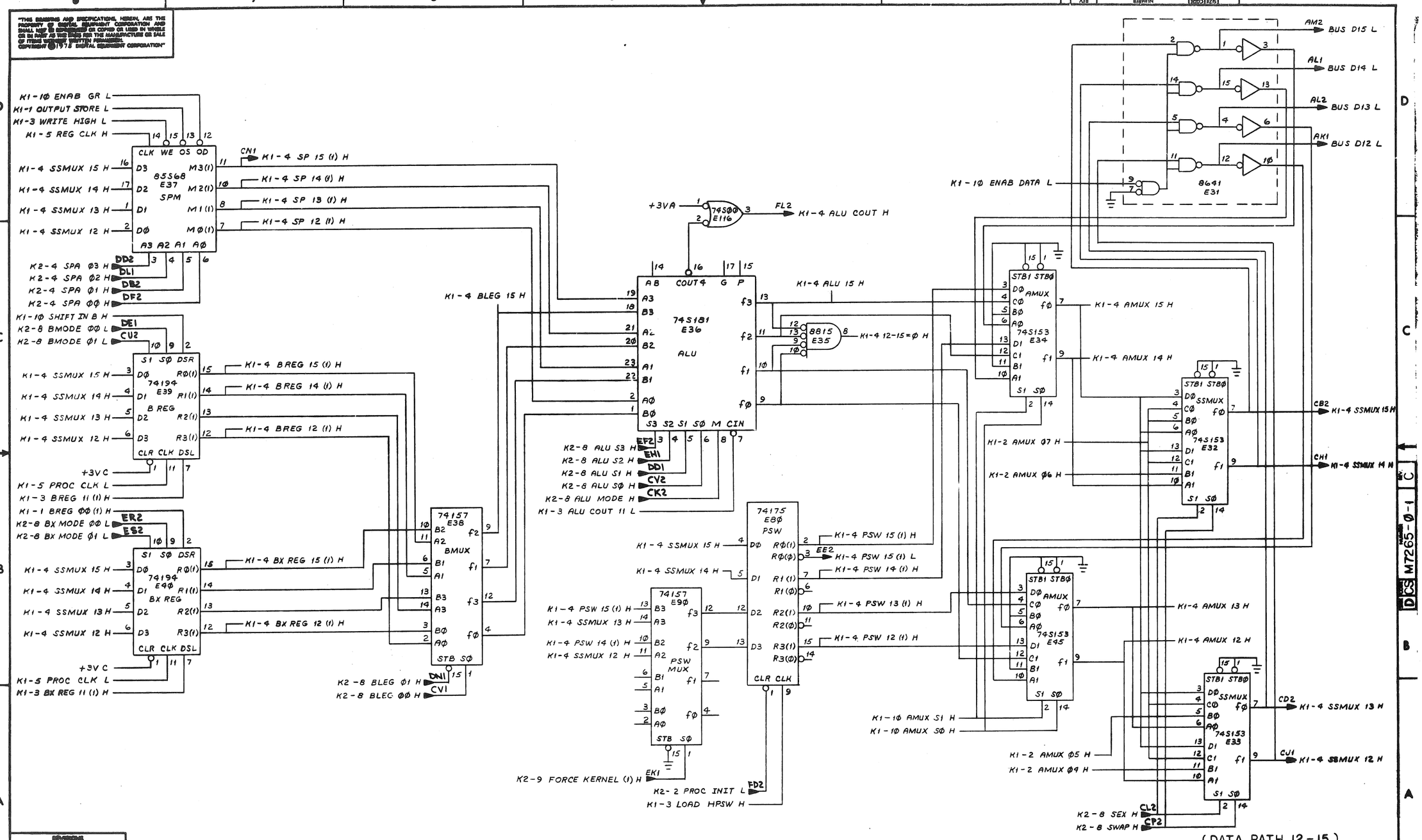

(DATA PATH 12-15)

REVISIONS		
CHK	CHANGE NO.	REV.

TITLE	SIZE	CODE	NUMBER	REV.
KDIIE DATA PATH (K1-4)	D	CS	M7265-0-1	C
SCALE —	SHEET 5 OF 11	DIST.		

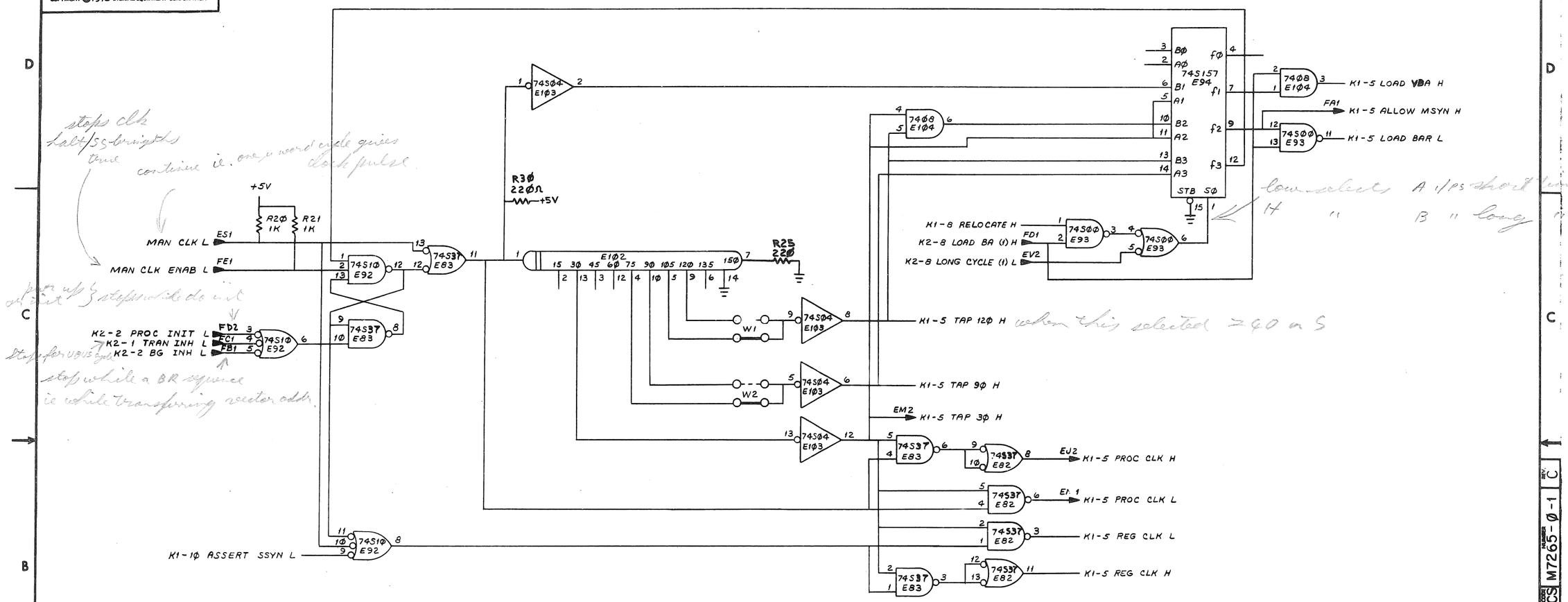

(CPU CLK)

REVISIONS		
CHK	CHANGE NO.	REV.

TITLE	SIZE	CODE	NUMBER	REV.
KD11E DATA PATH (K1-5)	D	CS	M7265-0-1	C
SCALE —//— SHEET 6 OF 11	DIST.			

DEC FORM NO. DRD 139

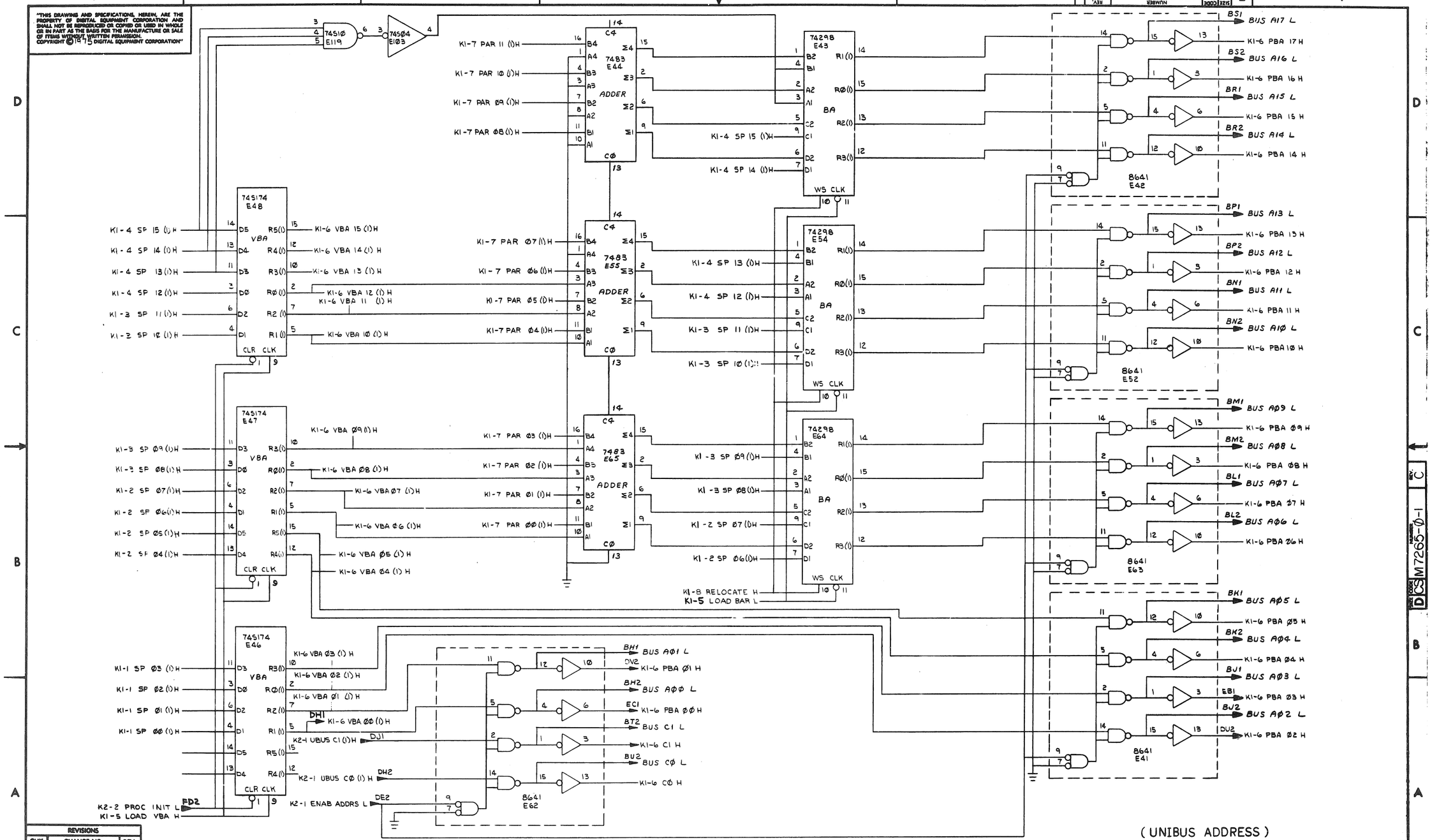

REVISIONS		
CHK	CHANGE NO.	REV.

TITLE	SIZE	CODE	NUMBER	REV.
KD11E DATA PATH (K1-6)	D	CS	M7265-0-1	C
SCALE —	SHEET 7 OF 11	DIST.		

DEC FORM NO. DRD 123

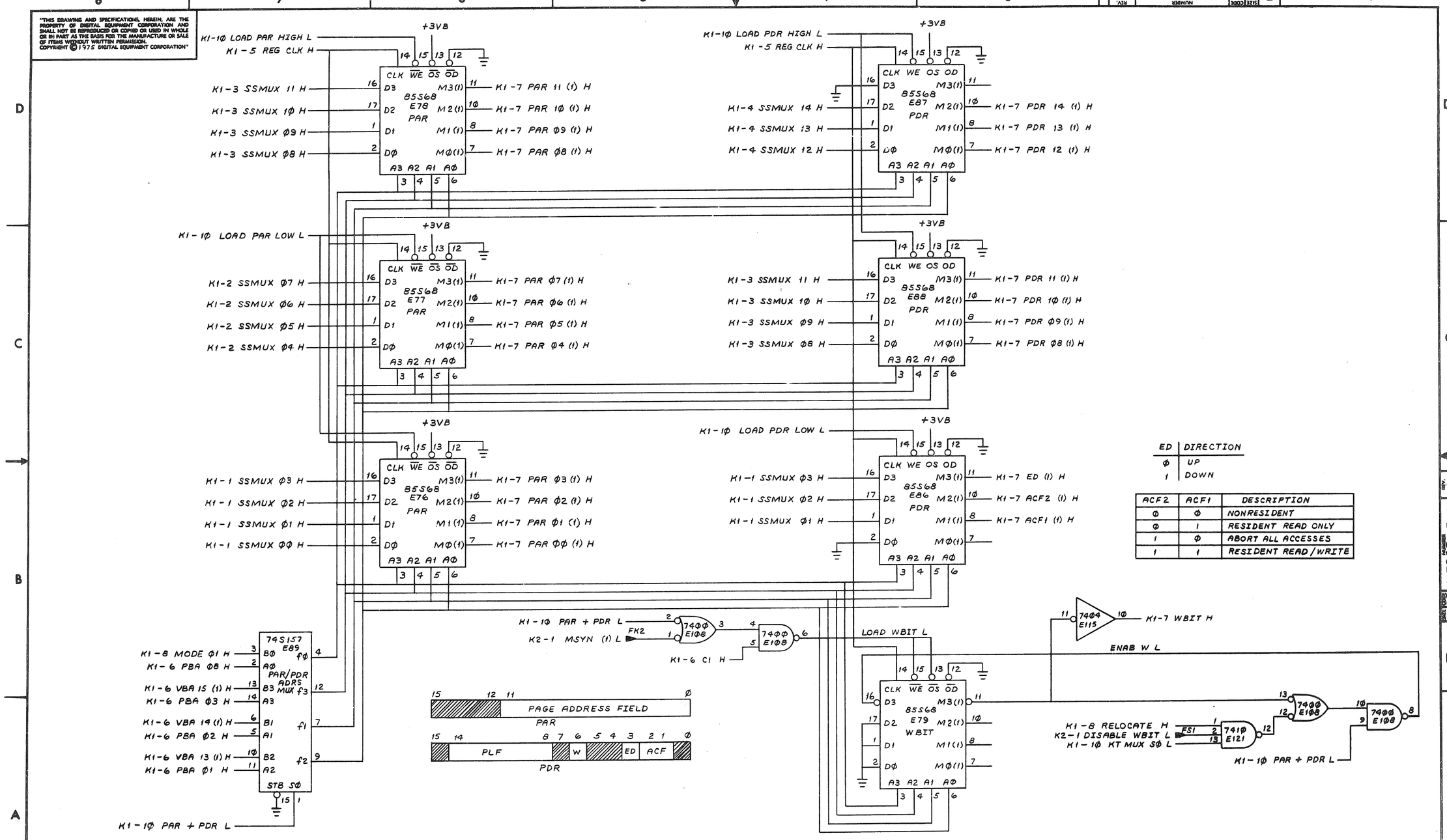

ED	DIRECTION
0	UP
1	DOWN

ACF2	ACF1	DESCRIPTION
0	0	NONRESIDENT
0	1	RESIDENT READ ONLY
1	0	ABORT ALL ACCESSES
1	1	RESIDENT READ/WRITE

(PAR + PDR)

REVISIONS		
CHK	CHANGE NO.	REV.

TITLE	SIZE	CODE	NUMBER	REV.
KDIIE DATA PATH (K1-7)	D	CS	M7265-0-1	C

SCALE — SHEET 8 OF 11 DIST.

DEC FORM NO. 123

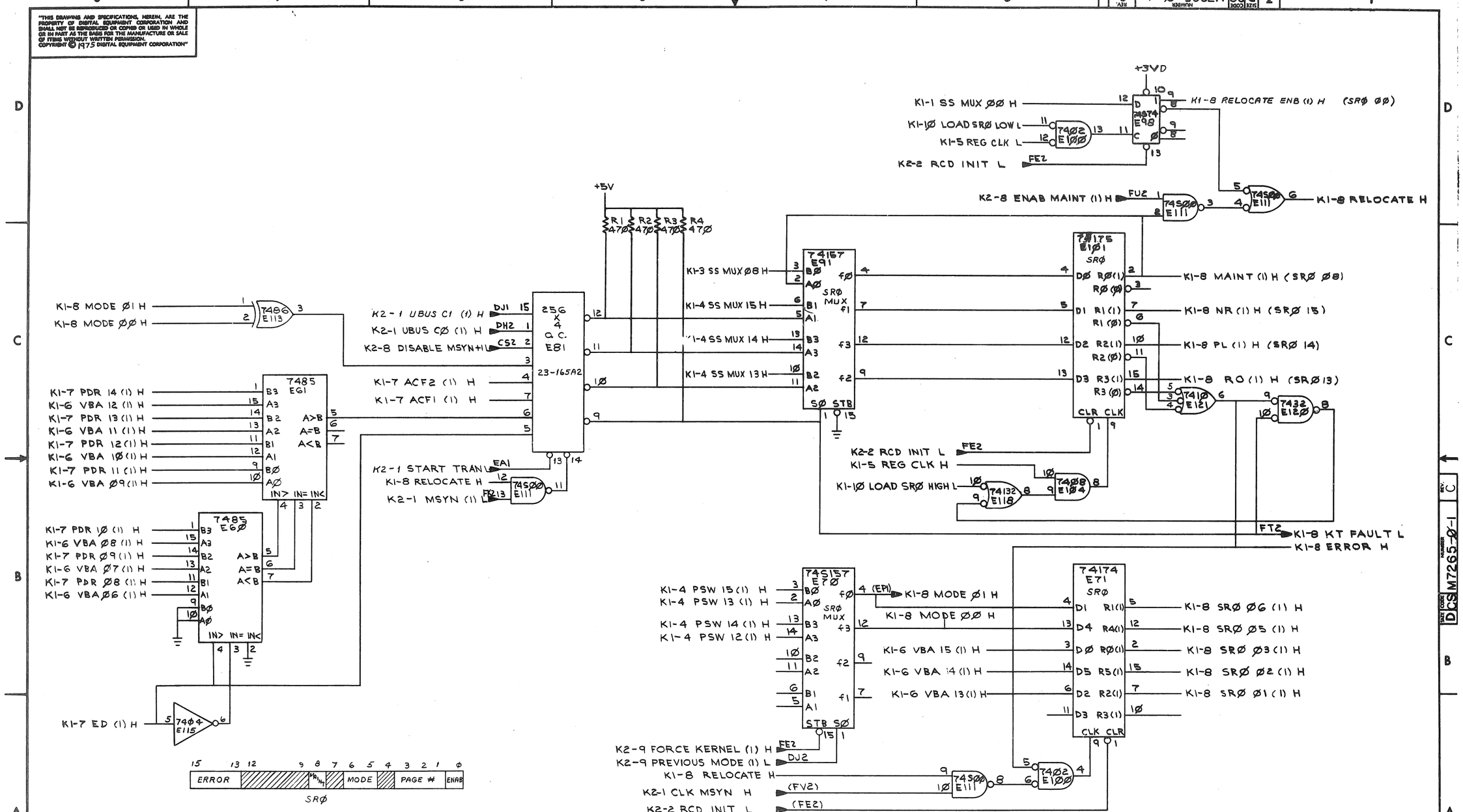

(SRØ AND KT ERROR)

REVISIONS		
CHK	CHANGE NO.	REV.

TITLE	SIZE	CODE	NUMBER	REV.
KDIIE DATA PATH (K1-8)	D	CS	M7265-Ø-1	C
SCALE	SHEET 9 OF 11	DIST.		

DEC FORM NO. DRD 189

S1	SØ	f
H	H	SRØ
H	L	SR2
L	H	PAR
L	L	PDR

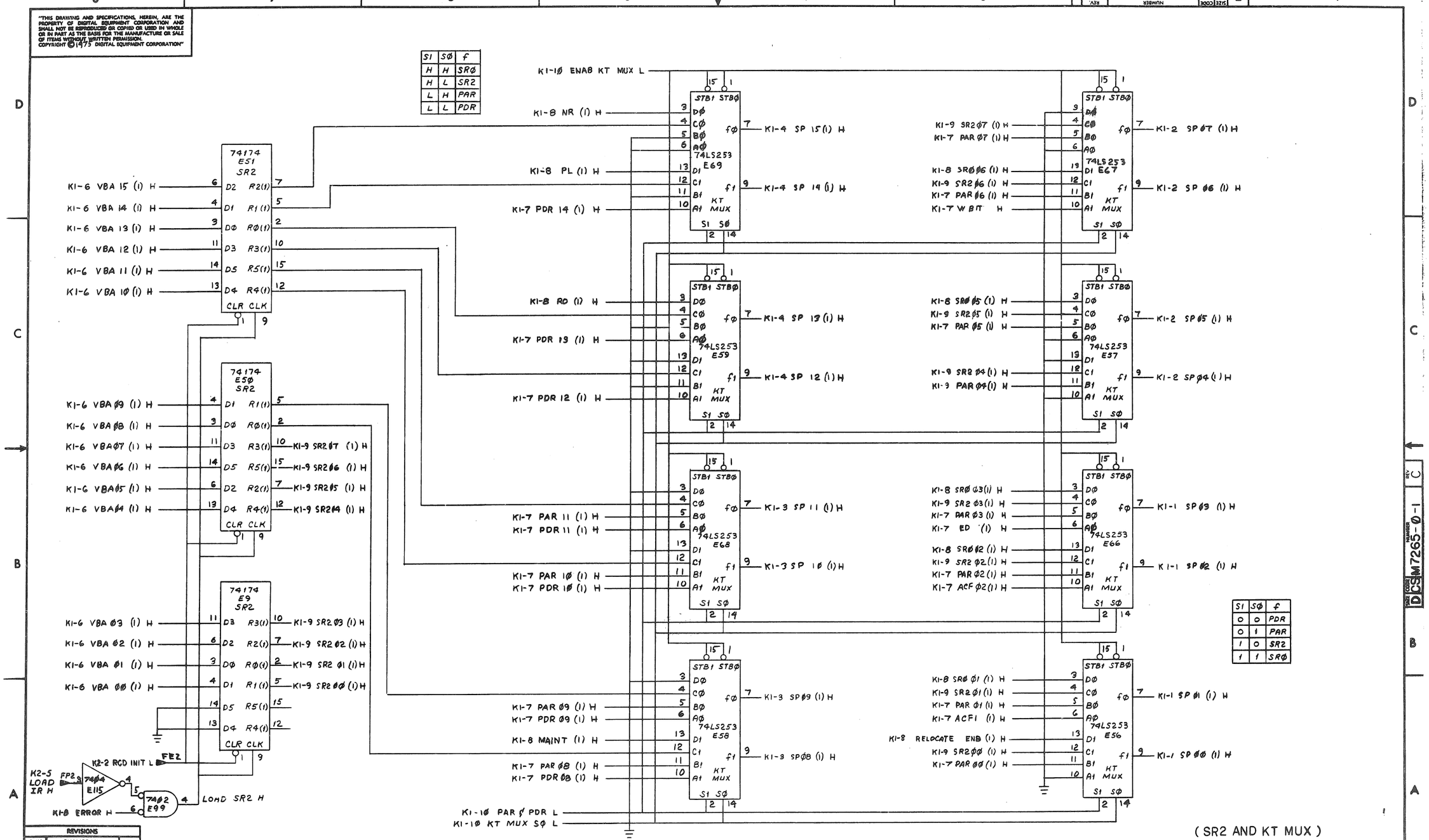

S1	SØ	f
0	0	PDR
0	1	PAR
1	0	SR2
1	1	SRØ

(SR2 AND KT MUX)

REVISIONS		
CHK	CHANGE NO.	REV.

TITLE	SIZE	CODE	NUMBER	REV.
KDIIE DATA PATH(K1-9)	D	CS	M7265-Ø-1	C

SCALE — SHEET 10 OF 11 DIST.

DEC FORM NO. DRD 128

responds to EPR, PSW, mem mmy. ovr.

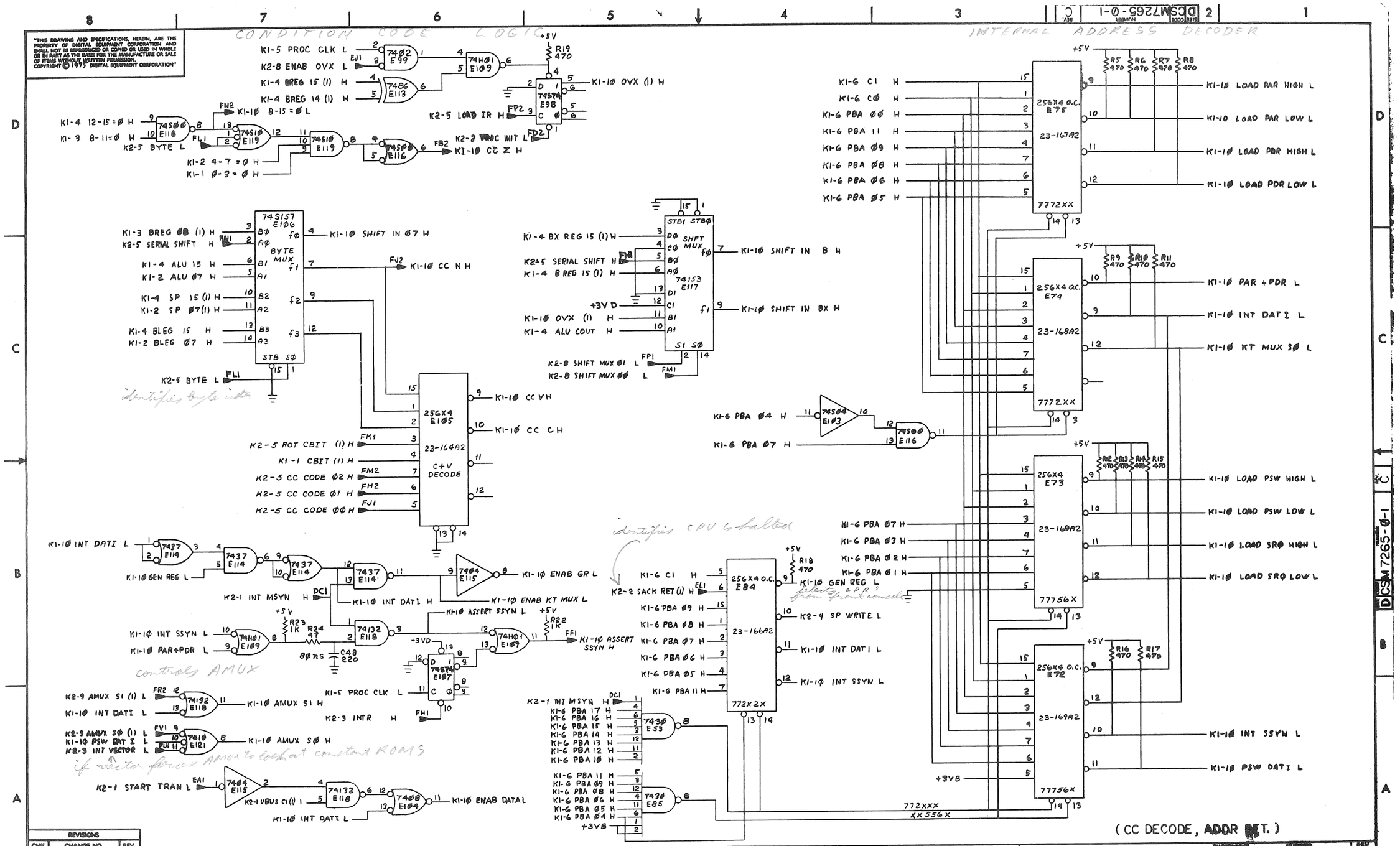

(CC DECODE, ADDR DET.)

REVISIONS		
CHK	CHANGE NO.	REV.

TITLE KDIIE DATA PATH(KI-ØØ) DCS

SCALE — SHEET 11 OF 11 DIST.

SIZE D CODE DCS NUMBER M7265-0-1 REV. C

1	E71	IC ROM 256X4 OC	23A22A2	74
1	E73	IC ROM 32X8 OC	23110A1	75
1	E78	IC ROM 256X4 TS	23163A2	76
1	E80	IC ROM 32X8 TS	23108A1	77
1	E81	IC ROM 32X8 TS	23107A1	78
2	E86, E94	IC ROM 32X8 TS	23109A1	79
1	E97	IC ROM 512X4 TS	23021A9	80
1	E98	IC ROM 512X4 TS	23022A9	81
1	E99	IC ROM 512X4 TS	23020A9	82
1	E100	IC ROM 512X4 TS	23023A9	83
1	E102	IC ROM 512X4 TS	23025A9	84
1	E103	IC ROM 512X4 TS	23024A9	85
1	E104	IC ROM 512X4 TS	23026A9	86
1	E105	IC ROM 512X4 TS	23019A9	87
1	E106	IC ROM 512X4 TS	23018A9	88
1	E107	IC ROM 512X4 TS	23017A9	89
1	E108	IC ROM 512X4 TS	23016A9	90
1	E109	IC ROM 512X4 TS	23015A9	91
A/R		WIRE(WRAP)30 AWG	9105740-55	92
1	E83	IC DEC 74S10	1910536	93

1	E26	IC DEC 74S37	1912746-00	52
2	E20,E95	IC DEC 74S02	1912388	53
1	E27	I.C. DEC 8641	1911579	54
2	E2,E41	I.C. DEC 74132	1911637	55
80		PIN WIRE WRAP	9009149	56
1		HANDLE ASSY	1210711-02	57
12		EYELET	9006732	58
1	W2	INSULATED JUMPER	9009185	59
2	E33, E48	IC DEC 74S74	1910544	60
1	E29	IC ROM 256X4 TS	23160A2	61
1	E50	IC ROM 32X8 TS	23106A1	62
1	E51	IC ROM 512X4 TS	23013A9	63
1	E52	IC ROM 256X4 OC	23175A2	64
1	E53	IC ROM 256X4 OC	23162A2	65
1	E58	IC ROM 256X4 OC	23174A2	66
1	E59	IC ROM 256X4 OC	23173A2	67
1	E60	IC ROM 256X4 TS	23161A2	68
1	E61	IC ROM 256X4 OC	23170A2	69
1	E62	IC ROM 256X4 OC	23176A2	70
1	E67	IC ROM 512X4 TS	23014A9	71
1	E68	IC ROM 256X4 OC	23172A2	72
1	E69	IC ROM 256X4 OC	23171A2	73

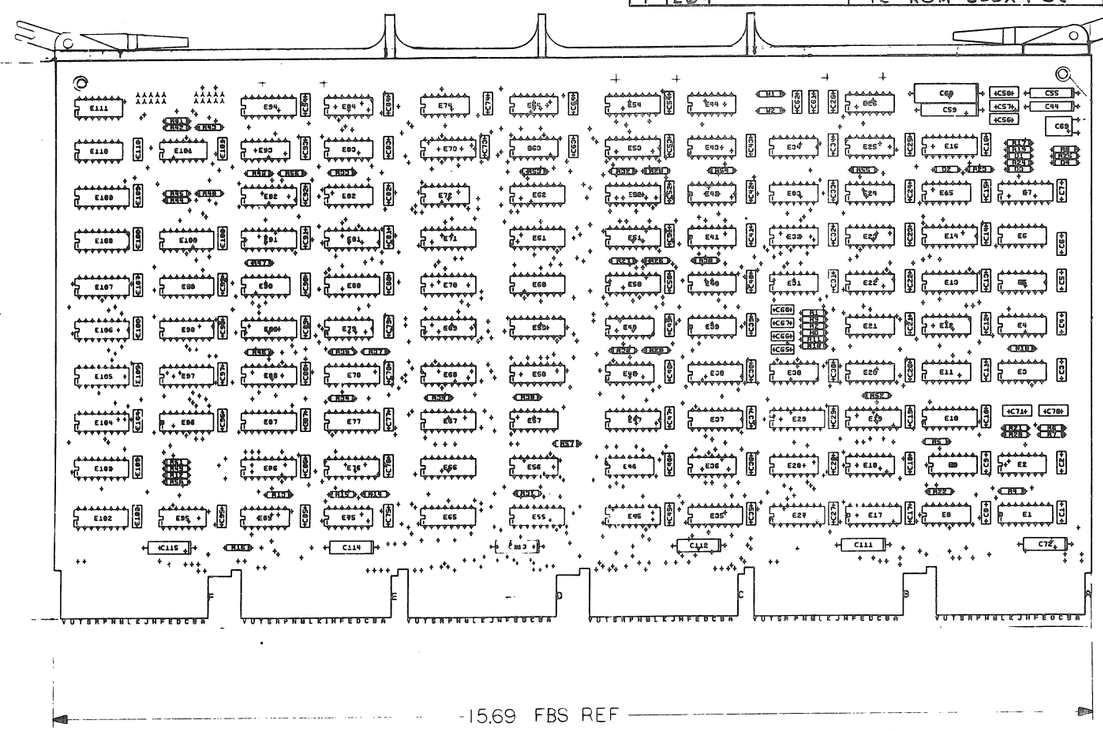

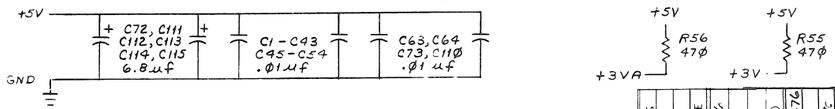

IC DEC 8690	1	8
IC DEC 8837	8	16
IC DEC 74S175	8	16
IC DEC 74174	8	16
IC DEC 74175	8	16
IC DEC 74S174	8	16
IC DEC 74S157	8	16
IC DEC 74S153	8	16
IC DEC 74123	8	16
IC DEC 7442	8	16
IC DEC 74193	8	16
IC DEC 7473	11	9
IC TYPE	GND	+5V

GND AND 5V ARE USUALLY PIN 7 AND 14 RESPECTIVELY EXCEPTIONS ARE STATED ABOVE

IC PIN LOCATIONS

REF		X-Y COORDINATE HOLE LOCATION	K-CO-M7266-0-4	1
REF		ASSY/DRILLING HOLE LAYOUT	D-AH-M7266-0-5	2
REF		MODULE ECO HISTORY	B-MH-M7266-0-6	3
1		ETCHED CIRCUIT BOARD	5011621	4
3	C68,C58,C67	CAPACITOR, 100pf, 100V, 5%	1000016	5
6	C65,C66,C61,C57,C71,C56	CAPACITOR, 470pf, 100V, 5%	1000024	6
1	C69	CAPACITOR, 220pf, 250V, 20%	1000055	7
1	C60	CAPACITOR, 10uf, 35V, 10%	1001476	8
93	C1 THRU C43,C45 THRU C54, C63,C64,C73 THRU C110	CAPACITOR, .01uf, 100V DISC	1001610-01	9
1	C59	CAPACITOR, 15uf, 20V, 10%	1004812	10
6	C72,C111,C112,C113,C114, C115	CAPACITOR, 6.8uf, 35V, 10%	1005306	11
2	C44,C55	CAPACITOR, .68uf, 35V, 10%	1009964	12
2	C62,C70	CAPACITOR, 220pf, 100V, 5%	1000021	13
4	D1 THRU D4	DIODE, D664	1100114	14
5	R4,R7,R11,R21,R3	RESISTOR, 47 OHM, 1/4W, 5%	1300202	15
5	R1,R10,R17,R18,R52	RESISTOR, 150 OHM, 1/4W, 5%	1300250	16
1	R54	RESISTOR, 220 OHM, 1/4W, 5%	1300271	17
9	R40 THRU R48	RESISTOR, 390 OHM, 1/4W, 5%	1300309	18
21	R26 THRU R31,R33 THRU R39,R9 R49,R50,R51,R53,R56,R55,R5	RESISTOR, 470 OHM, 1/4W, 5%	1300316	19
3	R12,R20,R32	RESISTOR, 1K, 1/4W, 5%	1300365	20
1	R24	RESISTOR, 10K, 1/4W, 5%	1300479	21
4	R8,R19,R23,R25	RESISTOR, 30K, 1/4W, 5%	1302394	22
5	R13 THRU R16,R22	RESISTOR, 178 OHM, 1/4W, 1%	1311422	23
2	R2,R6	RESISTOR, 750 OHM, 1/4W, 5%	1301401	24
5	E5,E31,E32,E34,E12.	I.C. DEC 7474	1905547	25
8	E3,E15,E18,E25,E28, ,E43, E85,E6	I.C. DEC 7400	1905575	26
1	E39	I.C. DEC 7410	1905576	27
2	E24,E44	I.C. DEC 7473	1905587	28
4	E22,E23,E42,E72,	I.C. DEC 7402	1909004	29
2	E8,E75	I.C. DEC 8881	1909705	30
2	E4,E30	I.C. DEC 8815	1909713	31
5	E40,E63,E64,E84,E93	I.C. DEC 74H01-01	1909849	32
2	E90,E101	I.C. DEC 7405	1909930	33
2	E76,E77	I.C. DEC 74193	1910018	34
1	E88	I.C. DEC 7442	1910046	35
1	E79	I.C. DEC 7437	1910091	36
2	E11,E49	I.C. DEC 7408	1910155	37
3	E7,E14,E16	I.C. DEC 74123	1910436	38
3	E46,E36,E82	I.C. DEC 74S00	1910532	39
2	E110,E111	I.C. DEC 74S04	1910534	40
2	E56,E57	I.C. DEC 74S20	1910539	41
2	E35,E45	I.C. DEC 74S153	1910547	42
2	E30,E10	I.C. DEC 74S157	1910548	43
7	E37,E19,E70,E87,E89,E91,E96	I.C. DEC 74S174	1910550	44
3	E13,E54,E66	I.C. DEC 74175	1910651	45
3	E55,E65 E92	I.C. DEC 74174	1910652	46
1	E74	I.C. DEC 7427	1910878	47
1	E47	I.C. DEC 74S175	1910957	48
2	E1,E17	I.C. DEC 8837	1911116	49
1	E21	I.C. DEC 7414	1911324	50
1	E9	I.C. DEC 8640	1911469	51
QTY	REF. DESIGNATION	DESCRIPTION	PART NO.	ITEM NO.

PARTS LIST

FIRST USED ON OPTION MODEL

ETCH BOARD REV. B

REV.	CHANGE NO.	CHK	
E	M7266-00005		12-11-76
D	M7266-00004		21-May-76
C	M7266-00003		Nov. 12, 1976
B	M7266-00002		

REVISIONS

DEC NO.	EIA NO.	DEC NO.	EIA NO.

SEMICONDUCTOR CONVERSION CHART

DRN. DATE 10/2/86
CHK'D. DATE 12-1-75
ENG. DATE 12-1-75
PROJ. DATE 12-1-75
PROD. DATE 12-1-75
NEXT HIGHER ASSY
SCALE —
SHEET 1 OF 11

digital

TITLE KDIIE CONTROL

SIZE D CODE CS NUMBER M7266-0-1 REV. E

DIST.

DEC FORM NO. DRD 135.8

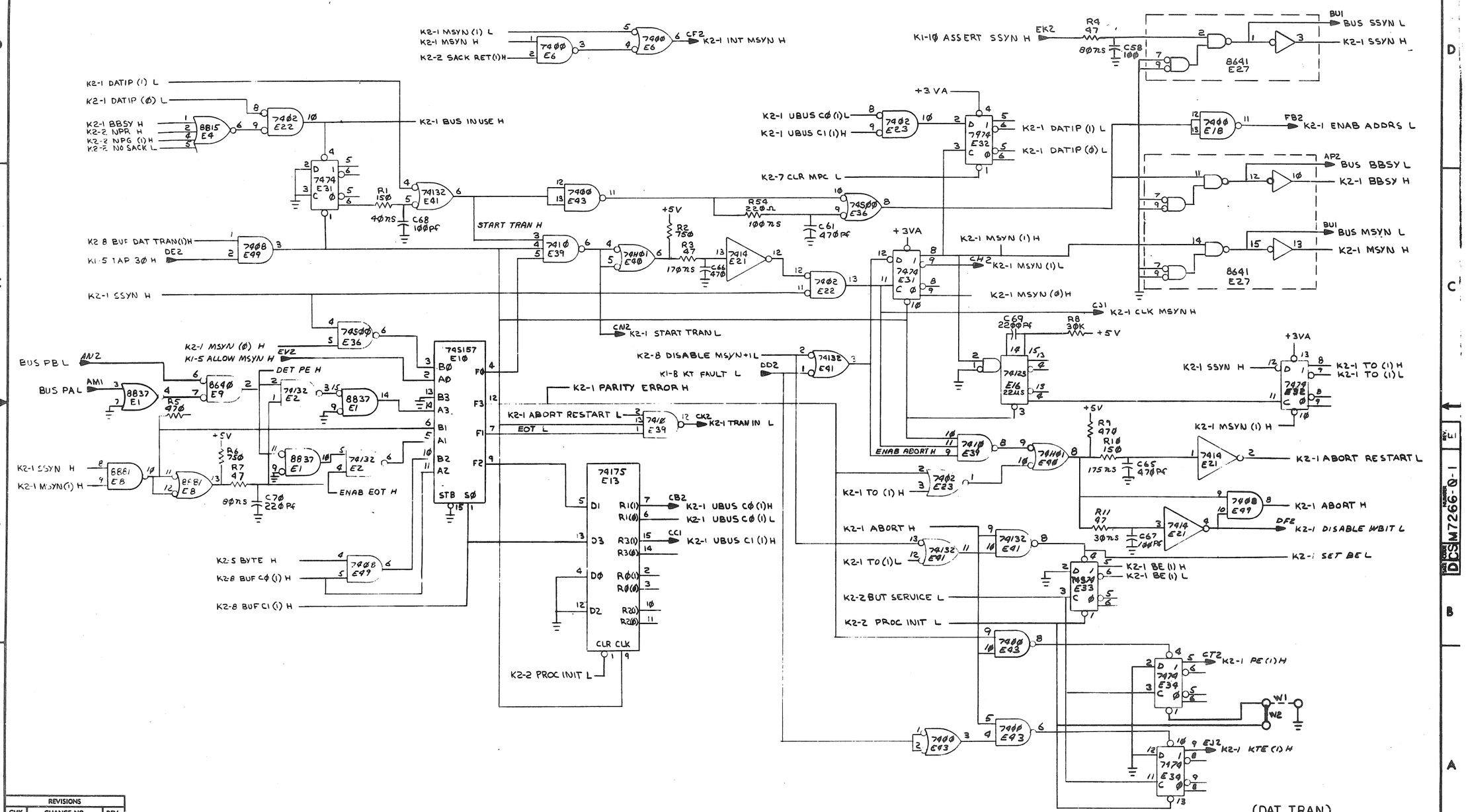

(DAT TRAN)

REVISIONS		
CHK	CHANGE NO.	REV.

TITLE	SIZE	CODE	NUMBER	REV.
KDIIE CONTROL (K2-1)	D	CS	M7266-0-1	E
SCALE —	SHEET 2 OF 12	DIST.		

DEC FORM NO. DRD 130

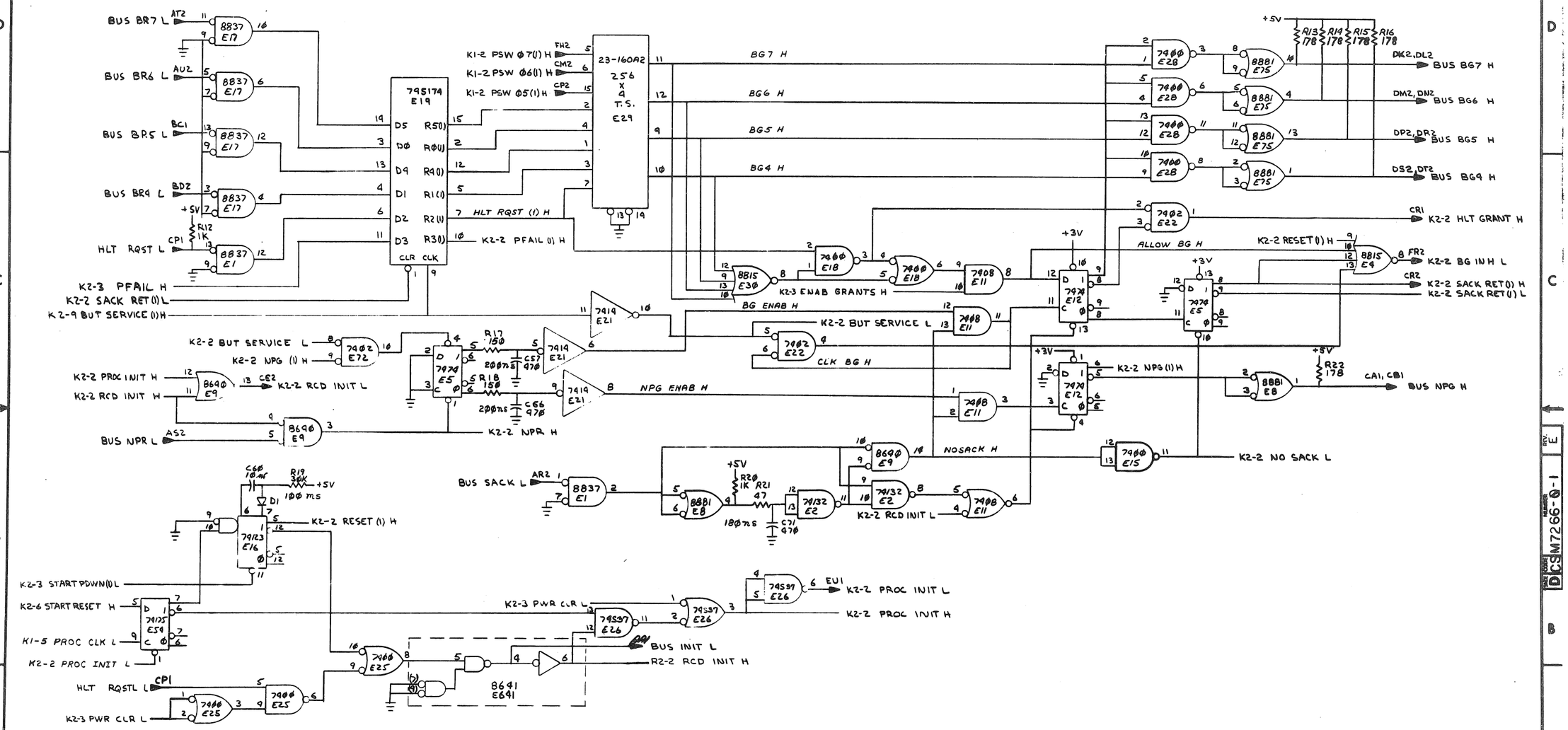

(PRIORIDY ARB)

REVISIONS		
CHK	CHANGE NO.	REV.

TITLE KDIIE CONTROL (K2-2)

SIZE D CODE CS NUMBER M7266-0-1 REV. E

SCALE — SHEET 3 OF 11 DIST.

DEC FORM NO. DRD 128

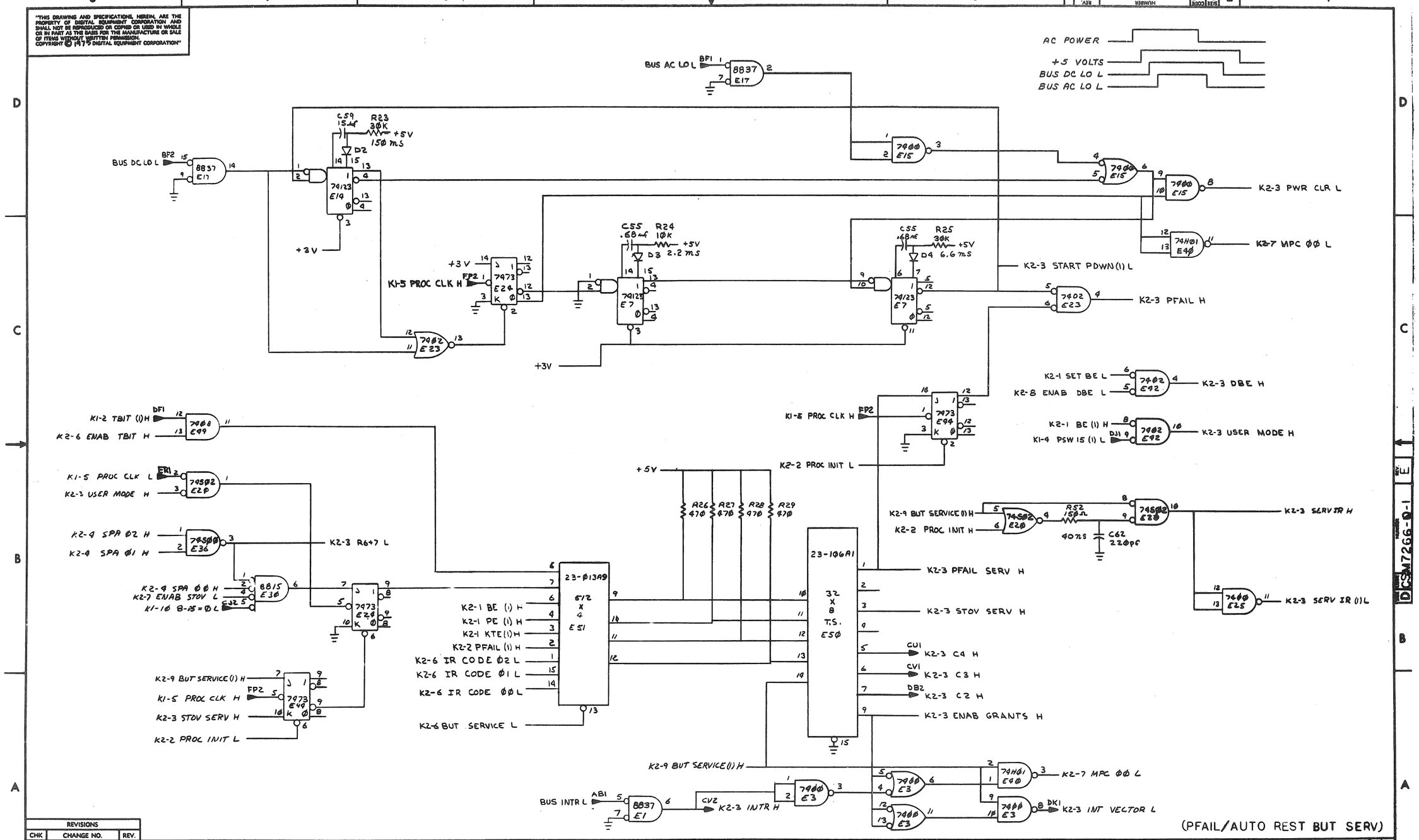

REVISIONS		
CHK	CHANGE NO.	REV.

TITLE KDIIE CONTROL (K2-3)

SIZE D CODE CS NUMBER M7266-Ø-1 REV. E

SCALE — SHEET 4 OF 11 DIST.

DEC FORM NO. DRD 139

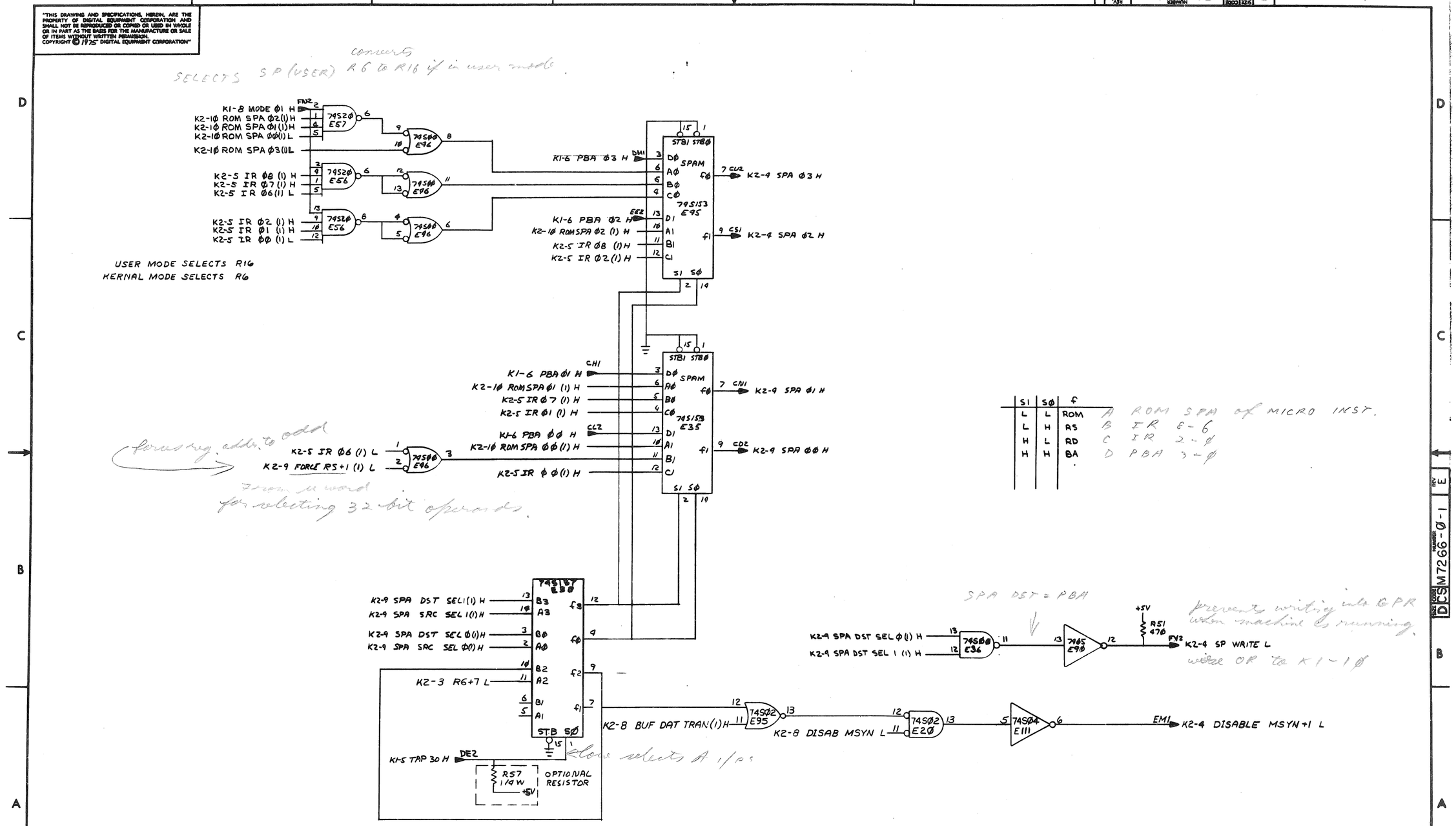

S1	SØ	f		
L	L	ROM	A	ROM SPA of MICRO INST.
L	H	RS	B	IR 6-6
H	L	RD	C	IR 2-Ø
H	H	BA	D	PBA 3-Ø

REVISIONS		
CHK	CHANGE NO.	REV.

(SPA MUX)

TITLE KDIIE CONTROL (K2-4)

SIZE D CODE CS NUMBER M7266-Ø-1 REV. E

SCALE — SHEET 5 OF 11 DIST.

DEC FORM NO. DRD 120

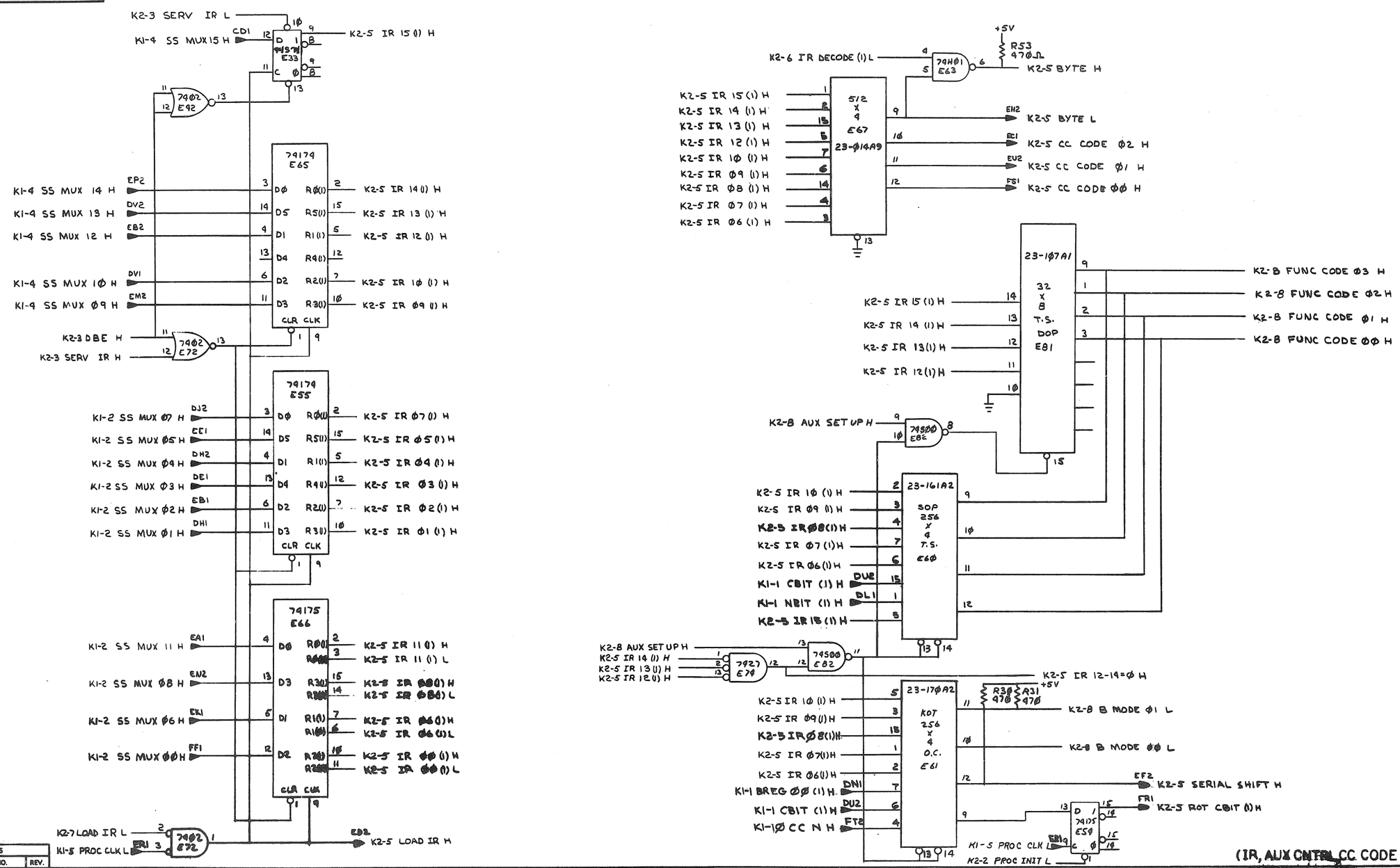

(IR, AUX CNTRL CC CODE)

REVISIONS		
CHK	CHANGE NO.	REV.

TITLE KDIIE CONTROL (K2-5)

SCALE — SHEET 6 OF 11

DCS M7266-0-1 REV. E

ECO FORM NO. ORD 128

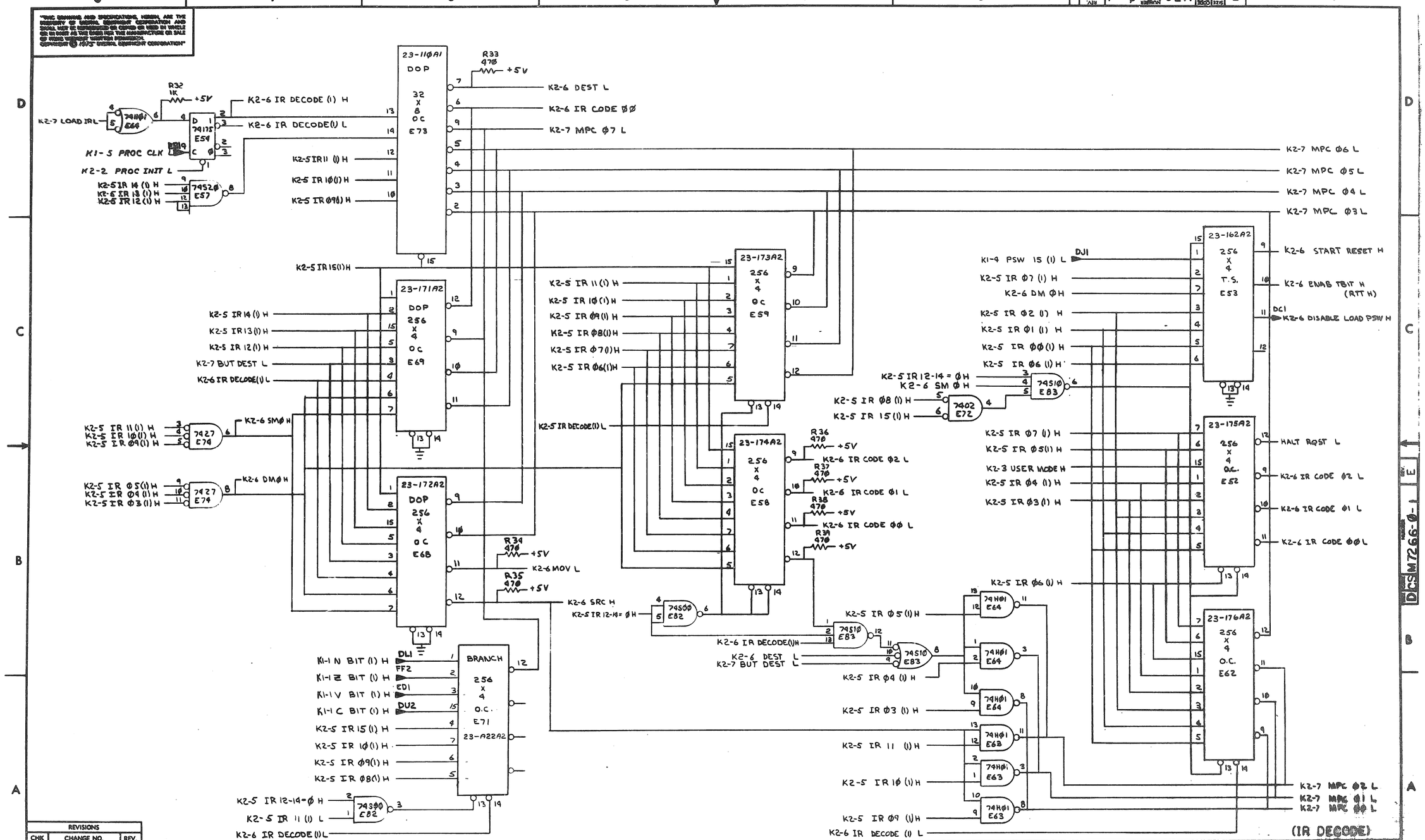

REVISIONS		
CHK	CHANGE NO.	REV.

TITLE: KDIIE CONTROL (K2-6)

SIZE D | CODE CS | NUMBER M7266-0-1 | REV. E

SCALE — | SHEET 7 OF 11 | DIST.

DEC FORM NO. DRD 138

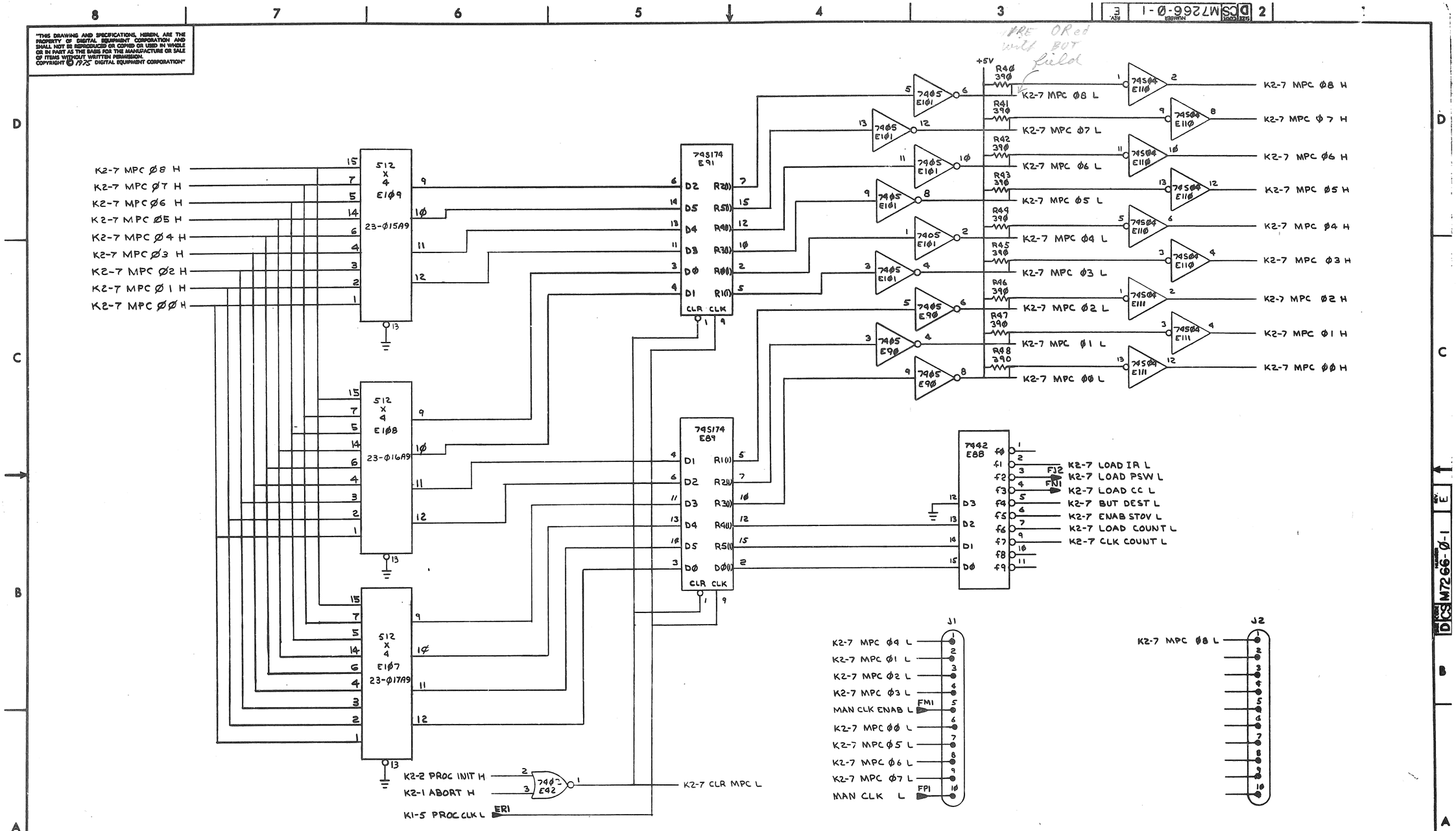

(MPC BUT FIELD)

REVISIONS		
CHK	CHANGE NO.	REV.

TITLE KDIIE CONTROL (K2-7)

SIZE D CODE CS NUMBER M7266-Ø-1 REV. E

SCALE — SHEET 8 OF 11 DIST.

DCS M7266-Ø-1 REV. E

DEC FORM NO. DRD 139

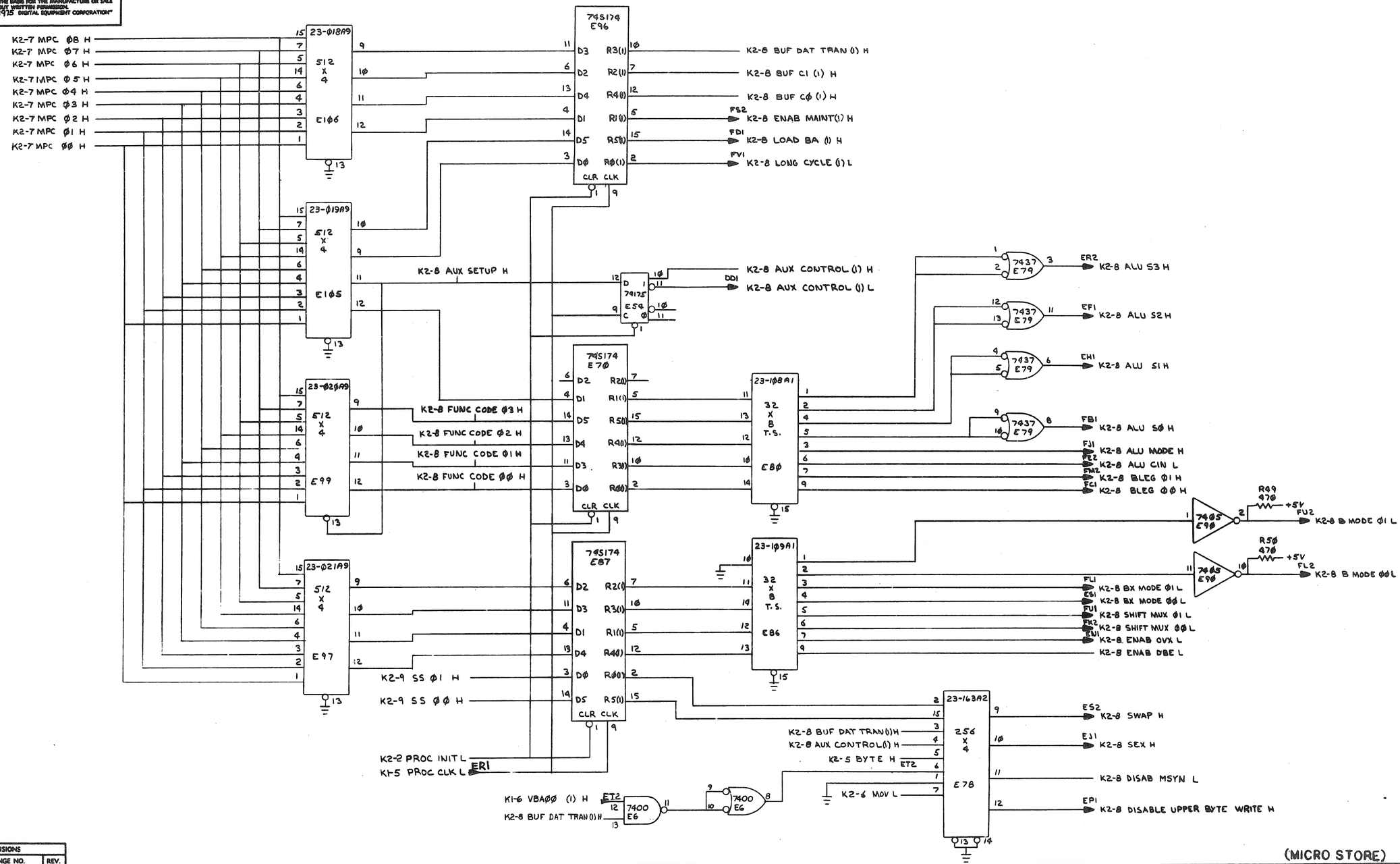

(MICRO STORE)

REVISIONS		
CHK	CHANGE NO.	REV.

TITLE KDIIE CONTROL (K2-8)

SIZE D CODE CS NUMBER M7266 Ø 1 REV. E

SCALE — SHEET 9 OF 11 DIST.

DEC FORM 510. DRD 139

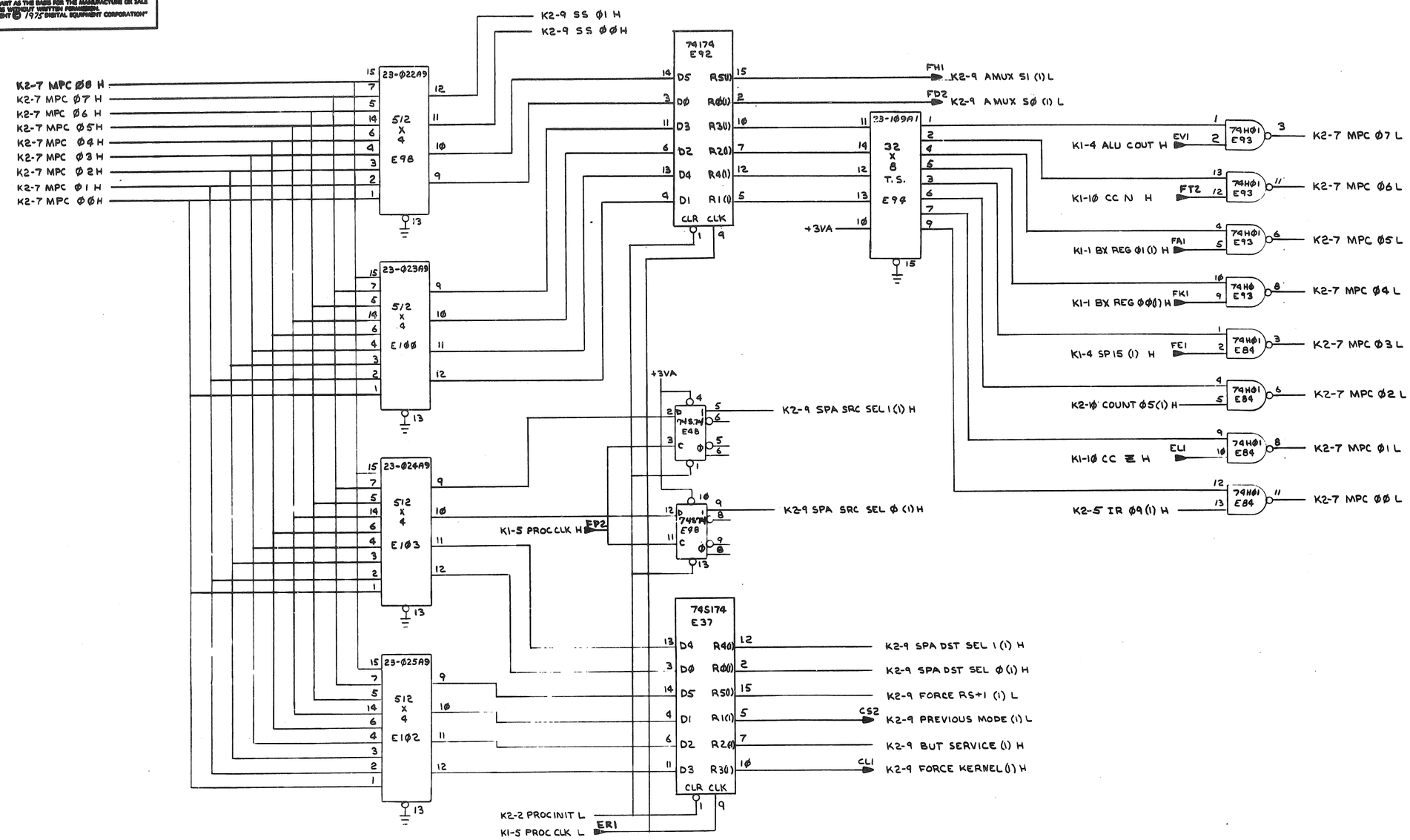

(MICRO CODE)

REVISIONS		
CHK	CHANGE NO.	REV.

TITLE: KDIIE CONTROL (K2-9)

SIZE CODE: D CS | NUMBER: M7266-Ø-1 | REV. E

SCALE — | SHEET 10 OF 11 | DIST.

DEC FORM NO. DRD 128

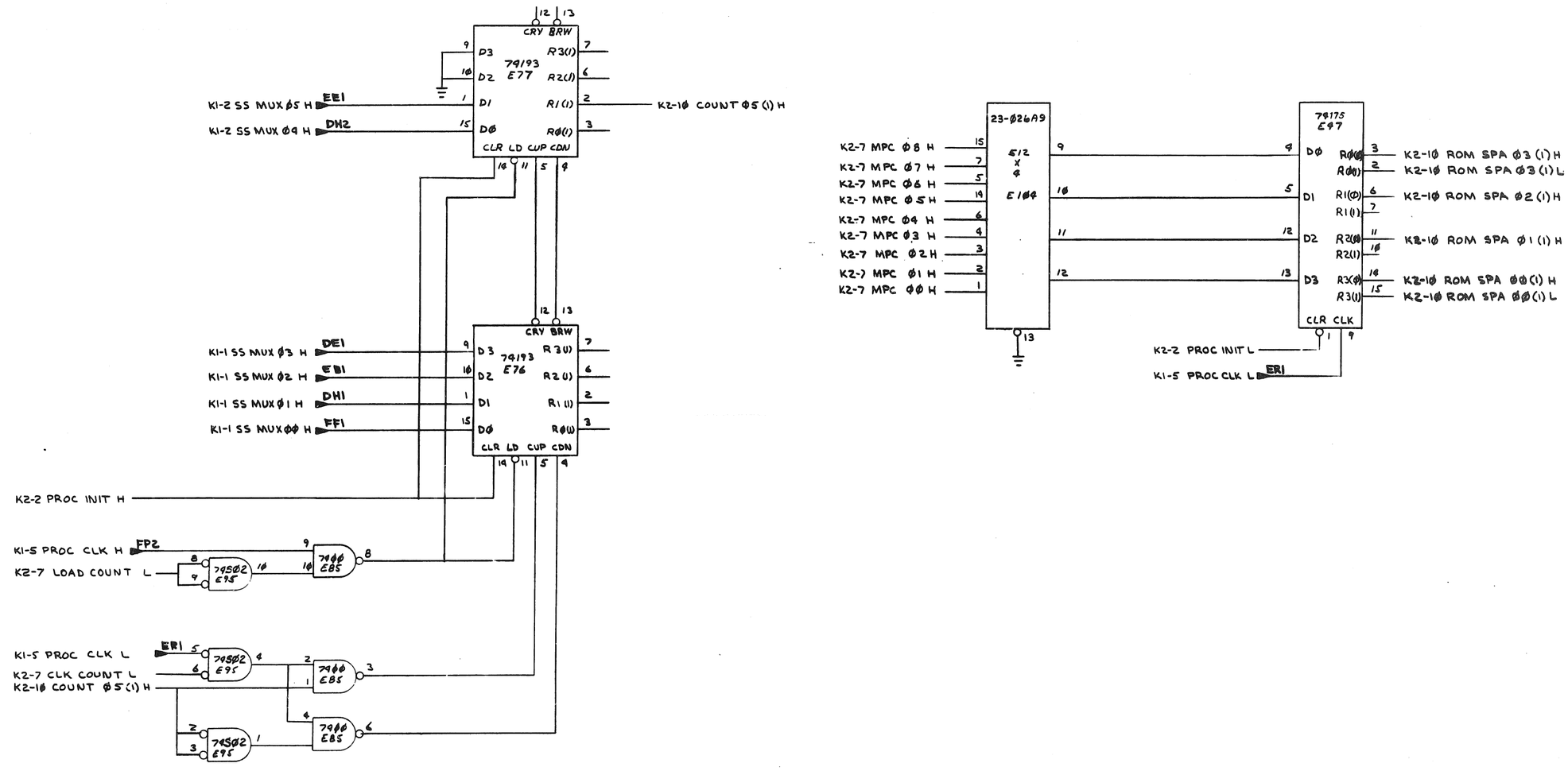

(ROM SPA COUNTER)

REVISIONS		
CHK	CHANGE NO.	REV.

TITLE KDIIE CONTROL (K2-10)

SIZE D CODE CS NUMBER M7266-Ø-1 REV. E

SCALE — SHEET 11 OF 11 DIST.

DSC FORM NO. DIID 1250

NOTES:

1. IN PDP11/04, 11/09 AND PDP 11/34, 11/39 SYSTEMS WITHOUT BATTERY BACKUP, TP1 SHOULD NOT BE CONNECTED TO THE POWER SUPPLY BATTERY STATUS SIGNAL UNLESS BOOTS ON ALL POWER RESTARTS ARE DESIRED.
2. IN ALL PDP11 SYSTEM WHOSE PROCESSOR MODULE DOES NOT CONTAIN GRANT PULL-UP RESISTORS, EITHER THE M9301 MUST BE POSITIONED IN THE TERMINATOR SLOT AT THE END OF THE UNIBUS FURTHEST FROM THE PROCESSOR OR JUMPERS W1 THRU W5 MUST BE INSTALLED, SO THE M9301 CAN BE INSERTED IN THE TERMINATOR SLOT NEXT TO THE PROCESSOR.
3. ON PDP11 SYSTEMS CONTAINING A BUS REPEATER OPTION, THE M9301 MUST BE INSTALLED ON THE PROCESSOR SIDE OF THE REPEATER SEE NOTE 2 FOR OTHER RESTRICTIONS.
4. JUMPER W6 SHOULD ONLY BE INSTALLED IN 11/55 AND 11/70 COMPUTERS WHOSE BACKPLANES HAVE BEEN MODIFIED FOR THIS MODULE. CONNECTOR PIN BD1 IN THESE MODIFIED BACKPLANES WILL NOT BE TIED TO GROUND.
5. EARLIER VERSIONS USED PLASTIC SWITCH COVER (PN 1211184-06) TO PREVENT INADVERTENT PROGRAMING OF S1.

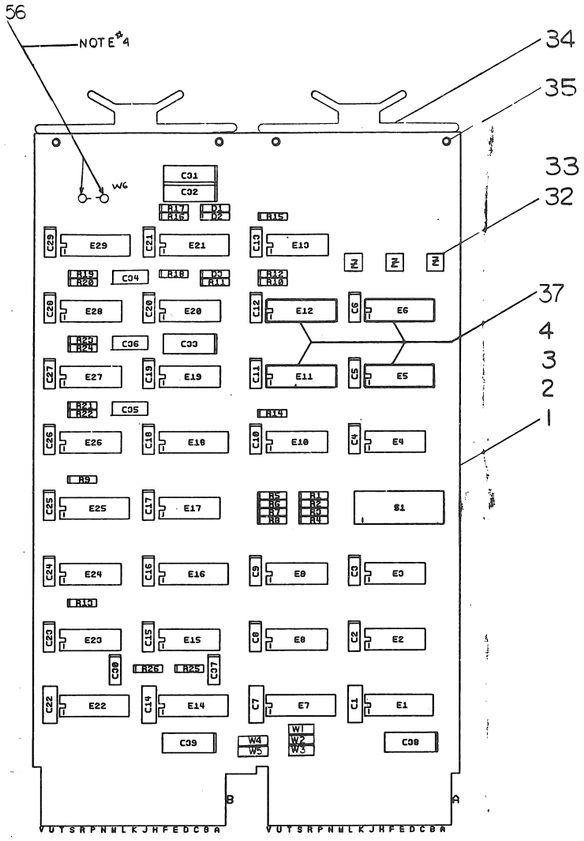

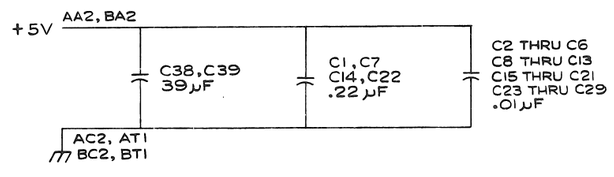

I.C. DEC 314	1	8
I.C. DEC 7476	13	5
I.C. DEC 8640	1	8
I.C. DEC 8837	8	16
I.C. DEC 9602	8	16
IC TYPE	GND	+5V

GND AND 5V ARE USUALLY PIN 7 AND 14 RESPECTIVELY EXCEPTIONS ARE STATED ABOVE

IC PIN LOCATIONS

QTY	REF. DESIGNATION	DESCRIPTION	PART NO.	ITEM NO.
REF	REF REF REF REF	X-Y COORDINATE HOLE LOCATION	K-CO-M9301-0-4	1
REF	REF REF REF REF	ASSY/DRILLING HOLE LAYOUT	D-AH-M9301-0-5	2
REF	REF REF REF REF	MODULE ECO HISTORY	B-MH-M9301-0-6	3
1	1 1 1 1	ETCHED CIRCUIT BOARD	5011208	4
4	4 4 4 4	C1, C7, C14, C22	CAP .22µF 50V 10%274-01	5
25	25 25 25 25	C2 THRU C6, C8 THRU C13 C15 THRU C21, C23 THRU C29	CAP .01 µF 100V 20% 101610-01	6
2	2 2 2 2	C30, C37	CAP .001µF 250V 20% 100043	7
4	4 4 4 4	C32, C33, C38, C39	CAP 39 µF 10V 10% 100076	8
3	3 3 3 3	C34, C35, C36	CAP 270pF 100V 5% 100022	9
3	3 3 3 3	D1, D2, D3	DIODE DG64 IN3606 110114	10
8	8 8 8 8	R1 THRU R8	RES 10K 1/4W 5% 130479	11
2	2 2 2 2	R9, R12	RES 1K 1/4W 5% 130365	12
4	4 4 4 4	R11, R13, R14, R18	RES 4.7K 1/4W 5% 130447	13
2	2 2 2 2	R16, R17	RES 30K 1/4W 5% 132394	14
3	3 3 3 3	R19, R21, R23	RES 47Ω 1/4W 5% 130202	15
3	3 3 3 3	R20, R22, R24	RES 2K 1/4W 5% 132388	16
2	2 2 2 2	R25, R26	RES 383Ω 1/4W 5% 135125	17
2	2 2 2 2	E1, E22	28 RES DIVIDER NETWORK	13-12628-00	18
2	2 2 2 2	E7, E14	25 RES DIVIDER NETWORK	13-12628-01	19
8	8 8 8 8	E2, E3, E8, E9 E15, E23, E27, E28	I.C. DEC 8881	197705	20
2	2 2 2 2	E4, E10	I.C. DEC 7402	199004	21
1	1 1 1 1	E13	I.C. DEC 7474	195547	22
3	3 3 3 3	E16, E18, E25	I.C. DEC 8837	191116	23
1	1 1 1 1	E17	I.C. DEC 7420	195577	24
2	2 2 2 2	E19, E24	I.C. DEC 314A	199704	25
1	1 1 1 1	E20	I.C. DEC 8640	191469	26
1	1 1 1 1	E21	I.C. DEC 9602	191951	27
1	1 1 1 1	E26	I.C. DEC 7437	191091	28
1	1 1 1 1	E29	I.C. DEC 7476	195585	29
1	1 1 1 1	S1	SWITCH, DIP, 10 POLE	1211164-06	30
~~1~~	~~1 1 1 1~~	~~SWITCH COVER~~	~~1211184-06~~	~~31~~
3	3 3 3 3		EYELET (FASTON)	9009000	32
3	3 3 3 3	TP1, TP2, TP3	TAB (FASTON)	9007112	33
2	2 2 2 2		HANDLE FLIP/CHIP MAGENTA	9008337-06	34
4	4 4 4 4		EYELET	9006732	35
1	1 1 1 1	C31	CAP 1µF 35V 10%	101776	36

M9301-YD M9301-YC M9301-YB M9301-YA M9301

PARTS LIST

FIRST USED ON OPTION MODEL: 11/04

ETCH BOARD REV. F

DEC NO.	EIA NO.	DEC NO.	EIA NO.

SEMICONDUCTOR CONVERSION CHART

REV.	CHANGE NO.	
F	REDESIGN-00002	J. Carter 6/23/75
J	12-2-75	
H	M9301-00003	J. Carter 12-1-75
J	M9301-00004	9-9-75
K	M9301-00005	Nov. 12, 1976
L	M9301-00006	7-Sept-76

REVISIONS

DRN. J. VINCENT DATE 4/5/76
CHK'D. R. COOK DATE 5/28/76
ENG. T. DUBANEUR DATE 6/23/76
PROJ. ENG. J. BLOEM DATE 6/19/76
PROG. R. PETERSON DATE 6/28/76
NEXT HIGHER ASSY
SCALE —//—
SHEET 1 OF 5

TITLE UNIBUS TERMINATOR/ BOOTSTRAP

SIZE D CODE CS NUMBER M9301-0-1 REV. L

DIST.