REVISIONS

LTR	DESCRIPTION	DATE	APPROVED
A	Released to Prod. per E.O.5699	2-9-79	
B	Incorporated E.O. 3309	9-24-79	
C	Incorporated E.O. 3387	11-2-79	

PRODUCTION RELEASE

TABLE OF CONTENTS

Maintenance Drawing Package

Products Covered by this Drawing Package
PM-DZ11A
PM-DZ11B
PM-DZ11E

DO NOT SCALE DRAWING

SCREW THREADS PER HANDBOOK H-28

COUNTERBORE AND SPOTFACE FILLET RADII TO BE .010 MAXIMUM

REMOVE ALL BURRS AND BREAK SHARP EDGES EQUIVALENT TO .010R

ROUGHNESS OF MACHINED SURFACES 125√ PER USAS B46.1.

STANDARD HOLE TOLERANCE PER AND 10387

TOLERANCES ON: .XX = ± .03 .XXX = ± .010 ANGLES = ± 0° 30'

INTERPRET DIMENSIONS AND TOLERANCES PER USAS Y14.5

DIMENSIONS ARE IN INCHES AND APPLY AFTER HEAT TREAT AND FINISH

UNLESS OTHERWISE SPECIFIED

CONTRACT NO.		
DRAWN	N. Glass	2-9-79
CHECK	N. Glass	2-9-79
DESIGN		
PROJ. ENGR	M. Parker	2-9-79
	[illegible]	2-9-79
OTHER APPROVALS		

Plessey Peripheral Systems

DRAWING TITLE: MAINTENANCE DRAWING PACKAGE

PM-DZ11A, B, & E Asynchronous Multiplexer

SIZE	CODE IDENT NO.	DWG NO.
B	52648	MD 701885

SCALE:

SHEET 1 OF 1 (33)

Plessey Peripheral Systems

APPLICATION	
NEXT ASSY	USED ON

REVISIONS			
LTR	DESCRIPTION	DATE	APPROVED
A	REL TO PROD PER EO 5103	8-15-76	
B	INCORP EO 2615 2#	9-28-78	
C	INCORP EO 2718	11-30-78	
D	INCORP EO 2982 2#	4-16-79	
E	INCORP EO 3025 2#	4-24-79	

PRODUCTION RELEASE

REV STATUS OF SHEETS																					
REV LTR																					
SHEET																					
REV LTR	E	A	D	E																	
SHEET	1	2	3	4	5	6	7	8	9	10	11	12	13	14	15	16	17	18	19	20	21

DO NOT SCALE DRAWING

SCREW THREADS PER HANDBOOK H-28
COUNTERBORE AND SPOTFACE FILLET RADII TO BE .015 MAXIMUM
REMOVE ALL BURRS AND BREAK SHARP EDGES EQUIVALENT TO .010R
ROUGHNESS OF MACHINED SURFACES 125√ PER USAS B46.1.
STANDARD HOLE TOLERANCE PER ANSI B39.2
TOLERANCES ON: .XX = ± .03 .XXX = ± .010 ANGLES = ± 0° 30'
INTERPRET DIMENSIONS AND TOLERANCES PER USAS Y14.5
DIMENSIONS ARE IN INCHES AND APPLY AFTER HEAT TREAT AND FINISH
UNLESS OTHERWISE SPECIFIED

CONTRACT NO.

DRAWN	R. Osborne	5-25-78
CHECK	L. Punkin	6-7-78
DESIGN	Vivian	6-8-78
PROJ. ENGR.	R Oder	5-25-78
	D Evans	8-21-79
OTHER		
APPROVALS		

Plessey Memories Incorporated
Santa Ana, California

DWG TITLE
ASYNCHRONOUS MULTIPLEXER, KIT
PM/DZ11 (EIA)

SIZE	CODE IDENT NO.	DWG NO.
A	52648	701885

SCALE: ~ SHEET 1 OF 4

DISTR NO. 1234570 B

FORM 000020

NOTES

1. This document defines three E1A RS232 compatible versions of the PMDZ11. They are:

Variation	Part Number
PMDZ11 A	701885-100
PMDZ11B	701885-101
PMDZ11E	701885-102

2. Items 11, 16, and 17 are to be packaged in Item 18-101 version only.
3. Item 9 is to bepackaged in Item 18 in -100 and -102 versions.

SIZE	CODE IDENT NO.	DWG NO.
A	52648	701885

SCALE ~ REV A SHEET 2

PARTS LIST — Plessey Peripheral Systems

PARTS LIST NO. 701885 SH 3 REV LTR D

ENTRY CHG THIS REV LTR	NOTE	PART/ASSY NO. & QTY PER ASSY						-102	-101	-100	UNIT MEAS	PART NO. OR IDENTIFYING NO.	NOMENCLATURE OR DESCRIPTION	SPEC OR SOURCE	FIND NO
										X			ASYNCHRONOUS MULTIPLEXER, PM-DZ11A		
									X				ASYNCHRONOUS MULTIPLEXER, PM-DZ11B		
								X					ASYNCHRONOUS MULTIPLEXER, PM-DZ11E		
								2	1	1	EA	701640-100	BOARD ASSY, 8 LINE MUX PM DZ11 EIA		1
B								1		1	EA	701651-100	ASSY, DISTRIBUTION PANEL PM-H317E		2
B										1	EA	701663-100	ASSY, PANEL, STATIC FILTER		3
B								1			EA	701663-101	ASSY, PANEL, STATIC FILTER		4
C								2	1	1	EA	701608-100	CABLE ASSY, INTERCONNECT PM-BC05W		5
								1		1	EA	701588-100	ASSY, TEST CONNECTOR PM-H325		6
C															7
D								1		1	EA	701792-100	ASSY, TEST CONNECTOR PM-H372		8

PARTS LIST — Plessey Peripheral Systems

PARTS LIST NO. 701885 SH 4 REV LTR E

ENTRY CHG THIS REV LTR	NOTE	PART/ASSY NO. & QTY PER ASSY						-102	-101	-100	UNIT MEAS	PART NO. OR IDENTIFYING NO.	NOMENCLATURE OR DESCRIPTION	SPEC OR SOURCE	FIND NO
	3							2		2	EA	701517-001	BRACKET		9
								1		1	EA	701551-100	HARDWARE PACK, RACK MOUNTING		10
	2								1		EA	859798-1	FILTER, STATIC	AMP CAPITRON	11
C								2	1	1	EA	701694-100	CABLE, JUMPER RIBBON		12
															13
								1		1	EA	ZU223-RB	SOFTWARE PACKAGE	DEC	14
C								1	1	1	EA	MA701885	MANUAL, PM-DZ11A(E1A)		15
	2								2		EA	MS551957-30	SCREW, 6-32 X 1/2		16
	2								2		EA	MS35333-37	WASHER/LOCK, INT TOOTH, NO.6		17
								1	1	1	EA	4 IN X 6 IN X .002 THK	ZIP-LOC BAG	PACKAGE FACTORY	18
E									1 SET		EA.	841913-1	EXTRACTOR SET (4 PIECES/SET)	AMP CAPITRON	19
															20
															21

SIZE	CODE IDENT NO.	DWG NO.	SHEET
B	52648	701885	1 of 1

SCALE REV

Form 000087

REVISIONS				
ZONE	LTR	DESCRIPTION	DATE	APPROVED
	A	REL TO PROD PER EO 2516	2-17-78	
	B	INCORP EO 2644	10-31-78	
	C	INCORP EO 2768	11-28-78	
	D	INCORP EO 2830	2-21-79	
	E	INCORP EO 3255	8-30-79	
	F	INCORP EO 3338	10-16-79	

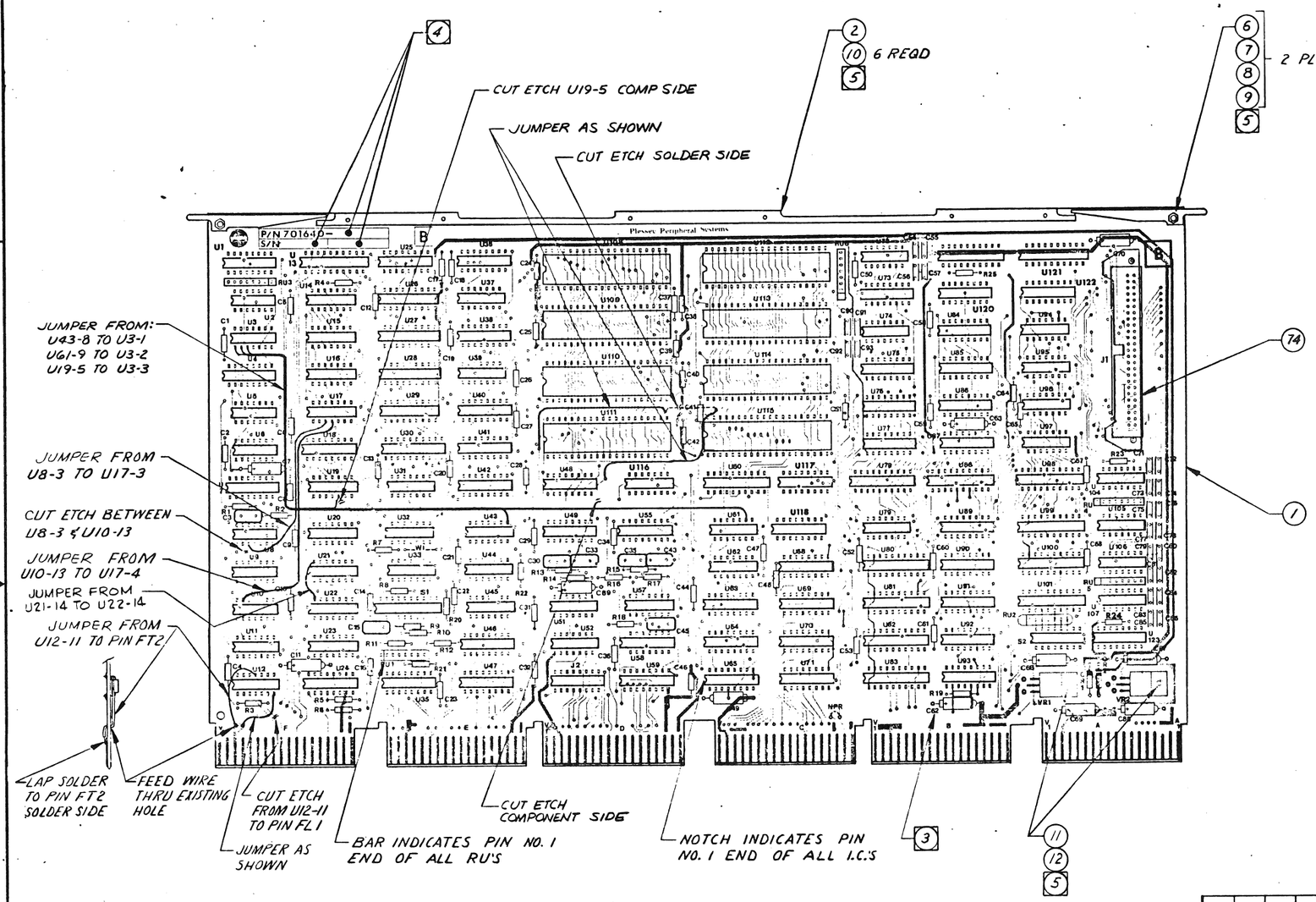

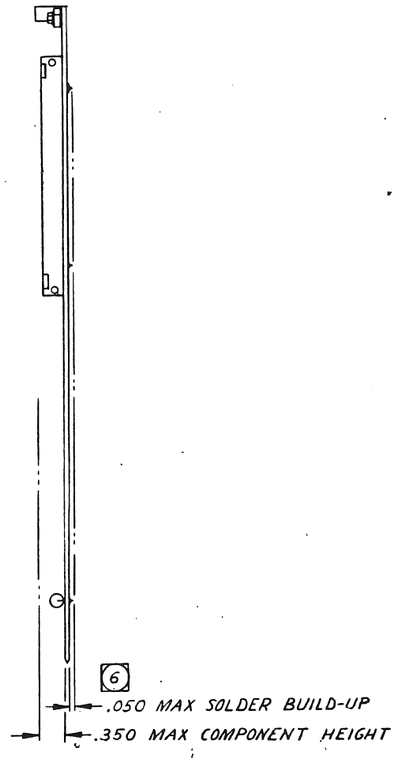

PRODUCTION RELEASE

7. INSTALL ITEM 4, STRAPPING PLUG, INTO J2.
6. COMPONENT LEAD TRIM AND SOLDER BUILD-UP TO BE AS NOTED.
5. INSTALL ITEMS NOTED AFTER FLOW SOLDER.
4. MARK ASSEMBLY VERSION NUMBER. LATEST REVISION LETTER AND SERIAL NUMBER WITH .12 HIGH CHARACTERS USING BLACK INK PER MIL-M-13231, GROUP III. LOCATION APPROX AS SHOWN.
3. COMPONENT DESIGNATIONS ARE FOR REFERENCE ONLY AND DO NOT APPEAR ON PART.
2. FOR SCHEMATIC DIAGRAM AND TEST SPEC SEE ITEMS 76 & 77.
1. ASSEMBLE AND INSPECT PER WORKMANSHIP STANDARDS MANUAL.

NOTES: UNLESS OTHERWISE SPECIFIED

PART/ASSY NO. & QTY PER ASSY						NOTE	PART OR IDENTIFYING NO.	NOMENCLATURE OR DESCRIPTION / MATERIAL	SPEC/SOURCE	CODE IDENT NO.	FIND NO.
					X			FOR PARTS LIST SEE PL701640-100			1
					-100						

PARTS LIST

PART/ASSY REV LTR		
		F
-100	FINAL	PM-DZ11A
PART NO.	NEXT ASSY	USED ON

APPLICATION

DO NOT SCALE DRAWING

SCREW THREADS PER HANDBOOK H-28
COUNTERBORE AND SPOTFACE FILLET RADII TO BE .010 MAXIMUM
REMOVE ALL BURRS AND BREAK SHARP EDGES EQUIVALENT TO .010R
ROUGHNESS OF MACHINED SURFACES 125√ PER USAS B46.1
STANDARD HOLE TOLERANCE PER AND 16287
TOLERANCES ON: .XX = ± .03 .XXX = ± .010 ANGLES = ± 0° 30'
INTERPRET DIMENSIONS AND TOLERANCES PER USAS Y14.5
DIMENSIONS ARE IN INCHES AND APPLY AFTER HEAT TREAT AND FINISH
UNLESS OTHERWISE SPECIFIED

CONTRACT NO.

DRAWN	J Wiesche	5-18-78
CHECK	L Franks	5-22-78
ENGR	R Cobe	5-26-78
PROJ. ENGR		
PROD. DESIGN	D Lub	5-26-78
OTHER APPROVALS		

Plessey Memories Incorporated
Santa Ana, California

DWG TITLE BOARD ASSEMBLY
8 LINE MULTIPLEXER
PM-DZ11A

SIZE	CODE IDENT NO.	DWG NO.
D	52648	701640

SCALE: 1/1 SHEET 1 OF 1

DISTR NO. 1-39-70

FORM NO. 800012

PARTS LIST — Plessey Microsystems

GROUP TITLE: BOARD ASSEMBLY, 8 LINE MULTIPLEXOR

		DATE
PREPARED BY	L. LAMBERT	2-15-78
CHECKED BY	R. Tunkis	3-2-78
RESP ENG	R. Ogden	3-21-78
APPRV		
DOC CONTROL	[illegible]	3-22-78

PARTS LIST NO.: PL 701640-100 — REV LTR: A

CODE IDENT NO. 52648 — D NO. 1231-5390 — D NO. B

SH 1 OF 8

MODEL NO. PM-DZ11A

LTR	DESCRIPTION	DATE	APPROVED
A	REL TO PROD PER E02516	8-17-78	[illegible]

PRODUCTION RELEASE

REV STATUS OF SHEETS										
REV LTR	A	A	A	A	A	A	A	A		
SHEET	1	2	3	4	5	6	7	8	9	10

PARTS LIST — Plessey Microsystems — CODE IDENT NO. 52648 — PARTS LIST NO. PL 701640-100 — SH 3 — REV LTR A

LTR	NOTE	QTY REQD	PART OR IDENTIFYING NO.	NOMENCLATURE OR DESCRIPTION	SPECIFICATION	CODE IDENT NO.	ZONE	FIND NO.	SYM	C/I USAGE: C/I CODE	INV ON HAND	PAR	UNIT COST
		1	701639-001	PRINTED WIRING BOARD				1					
		1	700407-001	STIFFENER				2					
								3					
	7	1	700066-196	STRAPPING PLUG				4					
								5					
		2	700330-001	HANDLE/EXTRACTOR				6					
		2	700331-001	SPACER				7					
		2	MS51957-4	SCREW/ 2-56 X 5/16 LG PAN HD.				8					
		2	NAS1291C02	NUT, HEX, #2 SELF-LOCKING				9					
		6	N-440-1/4	SCREW/NYLON, 4-40 X 1/4 LG BINDER HEAD, COLOR: NATURAL	WECKESSER			10					
		2	N-440-5/16	SCREW/ 4-40 x 5/16, FLAT HD NYLON COLOR: NATURAL	WECKESSER			11					
		2	N-440-X	NUT/ 4-40 NYLON COLOR: NATURAL	WECKESSER			12					
		1	MXO-40-2	CRYSTAL/5.0688 MHZ	CTS			13					

PARTS LIST — Plessey Microsystems — CODE IDENT NO. 52648 — PARTS LIST NO. PL 701640-100 — SH 2 — REV LTR A

CROSS INDEX OF REFERENCE DESIGNATIONS TO FIND NO.

REFERENCE DESIGNATION	FIND NO.	REFERENCE DESIGNATION	FIND NO.	REFERENCE DESIGNATION	FIND NO.	REFERENCE DESIGNATION	FIND NO.
U2	13	U38,40	32	R6	53	VR1	71
U3,51	14		33	R7,10,11,20,21	54	VR2	72
U4,84,85	15	U45,52	34	R9,	55	C3	73
U5,11,15, 19,33, 37,39,8	16	U49,55	35	R13,14,17	56		
		U58	36	R23,24,25	57		
U61	17	U59,65, 90-93	37	R15	58		
U9	18		38	C 54-57, 71-86, 90-93	59		
U10,14,21,22,31,6	19	U72,74,104-107	39	C1,2,4-6,8-10,12-14,16, 18-23,27,29,31,32,34, 36,37,39,41,44,46-48, 50-53,58-61,67,68,24, 26,28,38,40,42,65,17,64	60		
U12,32	20	U73,75	40				
U13,60,78,88,101	21	U76,77,86,87	41				
U17,43,62,116	22	U79	42				
U18,48,25	23	U89	43	C7,11,62,63,89	61		
U20,44,57,16	24	U94-97	44	C15,30	62		
U23	25	U98,99,100	45	C33,43	63		
U24,68-71	26	U108-115	46	C35	64		
	27	RU3	47	C45	65		
U26-29	28	RU4,5,6	48	C49,66,69,70,87,88	66		
U30,80-83	29	RU1,2	49	CR1,2	67		
U35,46,47	30	R1,4,8,12,16,19,22	50	SW1	68		
		R2,18	51	SW2	69		
U36,63,64,41,42	31	R3,5	52	J2	70		

PARTS LIST — Plessey Microsystems — CODE IDENT NO. 52648 — PARTS LIST NO. PL 701640-100 — SH 4 — REV LTR A

LTR	NOTE	QTY REQD	PART OR IDENTIFYING NO.	NOMENCLATURE OR DESCRIPTION	SPECIFICATION	CODE IDENT NO.	ZONE	FIND NO.	SYM	C/I USAGE: C/I CODE	INV ON HAND	PAR	UNIT COST
		2	SN7437	I.C./ QUAD 2-INPUT POSITIVE NAND BUFFER	T.I.			14					
		3	SN74LS175	I.C./ HEX QUAD D-TYPE FLIP-FLOPS W/CLR	T.I.			15					
		8	SN74LS08	I.C./ QUAD 2-INPUT POSITIVE AND GATE	T.I.			16					
		1	SN74H74	I.C./ DUAL D-TYPE EDGE TRIG FLIP-FLOPS/PRESET & CLR	T.I.			17					
		1	SN7402	I.C./ QUAD 2-INPUT POSITIVE NOR GATE	T.I.			18					
		6	SN74LS74	I.C./ DUAL D-TYPE EDGE TRIG FLIP-FLOPS/ PRESET & CLR	T.I.			19					
		2	136000-038	I.C./ QUAD 2-INPUT POSITIVE NAND BUFFER W/OC	T.I.			20					
		5	SN74LS244	I.C./ OCTAL BUFFER/ LINE DRIVER, LINE RECEIVER	T.I.			21					
		4	SN74H04	I.C./ HEX INVERTERS	T.I.			22					
		3	SN74LS193	I.C./ SYNCHRONOUS UP/DOWN DUAL CLOCK COUNTERS	T.I.			23					
		4	SN74LS00	I.C./ QUAD 2-INPUT POSITIVE NAND GATE	T.I.			24					
		1	SN74H00	I.C./ QUAD 2-INPUT POSITIVE NAND GATE	T.I.			25					
		5	DM8641	I.C./ OCTAL BUFFERS LINE DRIVERS / RECEIVERS	T.I.			26					

SIZE B — CODE IDENT NO. 52648 — DWG NO. PL 701640-100 — REV A — SCALE — SHEET 1 of 2

Form 000087

PARTS LIST — Plessey Microsystems — CODE IDENT NO. 52648 — PARTS LIST NO. PL 701640-100 — SH 5 — REV LTR A

EXPLODED VIEW	NOTE	QTY REQD	PART OR IDENTIFYING NO.	NOMENCLATURE OR DESCRIPTION	SPECIFICATION	CODE IDENT NO.	ZONE	FIND NO.	SYM	C/I USAGE: C/I CODE	INV ON HAND	PAR	UNIT COST
								27					
		4	COM5016	I.C. / BAUDRATE GENERATOR	SMC			28					
		5	SN74S241	I.C. / OCTAL BUFFER/LINE DRIVER LINE RECEIVER	T.I.			29					
		3	DS8136	I.C. / 6-BIT UNIFIED BUS COMP	NATIONAL			30					
		5	SN7442	I.C. / 4 TO 10-LINE DECODER	T.I.			31					
		2	SN74LS259	I.C. / 8-BIT ADDRESSABLE LATCH	T.I.			32					
								33					
		2	136021 -381	I.C. / QUAD NOR UNIFIED BUS RECEIVER	NATIONAL			34					
		2	SN74123	I.C. / DUAL RETRIGGERABLE MONO-STABLE MULTIVABRATORS /CLR	T.I.			35					
		1	SN7408	I.C. / QUAD 2-INPUT POSITIVE AND GATE	T.I.			36					
		6	DM8542	I.C. / QUAD I/O REG TRI-STATE	NATIONAL			37					
								38					
		6	DS1489	I.C. / QUAD LINE RECEIVER	NATIONAL			39					

PARTS LIST — Plessey Microsystems — CODE IDENT NO. 52648 — PARTS LIST NO. PL 701640-100 — SH 6 — REV LTR A

EXPLODED VIEW	NOTE	QTY REQD	PART OR IDENTIFYING NO.	NOMENCLATURE OR DESCRIPTION	SPECIFICATION	CODE IDENT NO.	ZONE	FIND NO.	SYM	C/I USAGE: C/I CODE	INV ON HAND	PAR	UNIT COST
		2	SN74LS157	I.C. / QUAD 2 TO 1 LINE DATA SELECTORS/MULTIPLEXERS	T.I.			40					
		4	AM2841	I.C. / 64X14 FIFO	AMD			41					
		1	SN7421	I.C. / DUAL 4-INPUT POSITIVE AND GATES	T.I.			42					
		1	SN74151	I.C. / 1-OF-8 DATA SELECTORS/ MULTIPLEXERS	T.I.			43					
		4	DS1488	I.C. / QUAD LINE DRIVER	NATIONAL			44					
		3	SN74LS240	I.C. / OCTAL BUFFER/LINE DRIVER LINE RECEIVER	T.I.			45					
		8	COM2017	I.C. / UNIVERSAL ASYNCHRONOUS RECEIVER/TRANSMITTER	SMC			46					
		1	750-81-R330	RESISTOR MODULE. 330Ω	CTS			47					
		3	750-81-R33K	RESISTOR MODULE. 33K	CTS			48					
		2	750-81-R4.7K	RESISTOR MODULE 4.7K	CTS			49					
		7	RC07GF102J	RESISTOR/1K, ±5%, 1/4W	MIL-R-11			50					
		2	RC07GF151J	RESISTOR/150Ω, ±5%, 1/4 W	MIL-R-11			51					
		2	RC07GF181J	RESISTOR/180Ω, ±5%, 1/4W	MIL-R-11			52					

PARTS LIST — Plessey Microsystems — CODE IDENT NO. 52648 — PARTS LIST NO. PL 701640-100 — SH 7 — REV LTR A

EXPLODED VIEW	NOTE	QTY REQD	PART OR IDENTIFYING NO.	NOMENCLATURE OR DESCRIPTION	SPECIFICATION	CODE IDENT NO.	ZONE	FIND NO.	SYM	C/I USAGE: C/I CODE	INV ON HAND	PAR	UNIT COST
		1	RC07GF391J	RESISTOR/390Ω, ±5%, 1/4 W	MIL-R-11			53					
		5	RC07GF472J	RESISTOR/4.7K, ±5%, 1/4 W	MIL-R-11			54					
		1	RC07GF470J	RESISTOR/47Ω, ±5%, 1/4 W	MIL-R-11			55					
		3	RC07GF103J	RESISTOR/10K, ±5%, 1/4W	MIL-R-11			56					
		3	RC07GF393J	RESISTOR/39K. ±5%. 1/4 W	MIL-R-11			57					
		1	RC07GF473J	RESISTOR/47K. ±5%. 1/4W	MIL-R-11			58					
		24	CK05BX 331K	CAPICITOR/330pf, ±5%, 200V	MIL-C-11015			59					
		50	CGA103Z D2	CAPACITOR/.01μf	UNITRODE			60					
		5	150D156X 0020B2	CAPACITOR/15μf, ±20%, 20V	SPRAGUE			61					
		2	CD15FD 101J03	CAPACITOR/100pf, ±5%, 500V	CORNELL DUBILIER			62					
		2	CD15ED 470J03	CAPACITOR/47pf ±5%, 500V	CORNELL DUBILIER			63					
		1	CK05BX 102K	CAPACITOR/1000pf, ±5%, 200V	MIL-C-11015			64					
		1	CD15ED 221J03	CAPACITOR/220pf, ±5%, 500V	CORNELL DUBILIER			65					

PARTS LIST — Plessey Microsystems — CODE IDENT NO. 52648 — PARTS LIST NO. PL 701640-100 — SH 8 — REV LTR A

EXPLODED VIEW	NOTE	QTY REQD	PART OR IDENTIFYING NO.	NOMENCLATURE OR DESCRIPTION	SPECIFICATION	CODE IDENT NO.	ZONE	FIND NO.	SYM	C/I USAGE: C/I CODE	INV ON HAND	PAR	UNIT COST
		6	150D685X 0035B2	CAPACITOR/6.8μf ±20% 35V	SPRAGUE			66					
		2	IN4370A	DIODE, ZENER 2.4V	FAIRCHILD			67					
		1	435668-0	DIP SWITCH, 10 POS	AMP			68					
		1	435668-8	DIP SWITCH, 8 POS	AMP			69					
		1	US-2-16-110-G-B	SOCKET, I.C.	SCANBE			70					
		1	μA7812UC	+12V REGULATOR TO 220	FAIRCHILD			71					
		1	μA7912UC	-12V REGULATOR TO 220	FAIRCHILD			72					
		1	C015ED 331J03	CAPACITOR/330pf. ±5%. 500V	CORNELL DUBILIER			73					
		1	3433-1002	CONNECTOR 50 PIN	3M			74					
								75					
		REF	SD701640	SCHEMATIC DIAGRAM				76					
		REF	TS701640	TEST SPECIFICATION				77					
								78					

SIZE B — CODE IDENT NO. 52648 — DWG NO. PL 701640-100 — SHEET 2 of 2 — SCALE — REV A

Form 000087

REVISIONS				
ZONE	LTR	DESCRIPTION	DATE	APPROVED
	A	REL TO PROD PER EO2516	8-17-78	
	B	INCORP EO 2644	10-31-78	
	C	INCORP EO2719	12-1-78	
	D	INCORP EO 2836	1-19-79	
	E	INCORP EO3255	8-30-79	

LAST REFERENCE DESIGNATION USED	
RESISTOR	R25
CAPACITOR	C93
INTEGRATED CIRCUIT	U116
DIODE	CR2
RESISTOR MODULE	RU6
VOLTAGE REGULATOR	VR2
SWITCH	SW2

REFERENCE DESIGNATION NOT USED	
CAPACITOR	C25
INT CKT	U1,7,34,50,53,54,56,66,67
	102,103

REF DESIG.	GATES USED PER TOTAL	PART NUMBER
U6	1/2	74LS74
U15	3/4	74LS08
U17	5/6	74H04
U52	3/4	136021-381

SIDE 2		SIDE 1	
+5V	A		CONNECTOR A
	B		
GND	C		
	D		
	E		
	F		
	H		
	J		
	K		
	L		
	M		
	N		
	P		
	R		
	S		
	T	GND	
	U		
	V		
+5V	A		CONNECTOR B
	B		
GND	C		
	D		
	E		
	F		
	H		
	J		
	K		
	L		
	M		
	N		
	P		
	R		
	S		
	T	GND	
	U		
	V		

SOLDER SIDE — COMPONENT SIDE

SIDE 2		SIDE 1	
+5V	A		CONNECTOR C
-15V	B		
GND	C		
BD15L	D		
BD14L	E		
BD13L	F		
BD12L	H	UDI1L	
BD10L	J		
BD09L	K		
BD08L	L		
BD07L	M		
BD04L	N		
BD05L	P		
BD01L	R		
BD00L	S		
BD03L	T	GND	
BD02L	U	+15V	
BD06L	V		
+5V	A		CONNECTOR D
	B		
GND	C		
BBR7L	D		
BBR6L	E		
BBR5L	F		
BBR4L	H		
	J		
BG7INH	K		
BG7OUTH	L	BINITL	
BG6INH	M		
BG6OUTH	N		
BG5INH	P		
BG5OUTH	R		
BG4INH	S		
BG4OUTH	T		
	U		
	V		

SOLDER SIDE — COMPONENT SIDE

SIDE 2		SIDE 1	
+5V	A		CONNECTOR E
	B		
GND	C	BA12L	
BA15L	D	BA17L	
BA16L	E	MSYNH	
BC1L	F	BA02L	
BA00L	H	BA01L	
BC0L	J		
BA13L	K	BA14L	
	L	BA11L	
	M		
BA08L	N		
BA07L	P	BA10L	
	R	BA09L	
	S		
	T	GND	
BA04L	U	BA06L	
BA03L	V	BA05L	
+5V	A		CONNECTOR F
	B		
GND	C	BSSYNL	
	D	BBSYL	
	E		
	F		
	H		
	J	NPRL	
	K		
	L		
	M	INTRL	
	N		
	P		
	R		
	S		
SACKL	T	GND	
	U		
	V		

SOLDER SIDE — COMPONENT SIDE

	J1		
DTR0H	1	2	C00
DTR1H	3	4	C01
DTR2H	5	6	C02
DTR3H	7	8	C03
DTR4H	9	10	C04
DTR5H	11	12	C05
DTR6H	13	14	C06
DTR7H	15	16	C07
GND	17	18	GND
XD0	19	20	RNG0
SI0	21	22	GND
XD1	23	24	RNG1
SI1	25	26	GND
XD2	27	28	RNG2
SI2	29	30	GND
XD3	31	32	RNG3
SI3	33	34	GND
XD4	35	36	RNG4
SI4	37	38	GND
XD5	39	40	RNG5
SI5	41	42	GND
XD6	43	44	RNG6
SI6	45	46	GND
XD7	47	48	RNG7
SI7	49	50	GND

PRODUCTION RELEASE

5. CAPACITOR VALUES ARE MICROFARADS.
4. RESISTOR VALUES ARE IN OHMS, ±5%, 1/4 W
3. DESIGNATIONS SHOWN IN PARENTHESIS INDICATES WHERE SIGNAL ORIGINATES OR TERMINATES.
   (2/B3)
   - ZONE DESIGNATION
   - SHEET NUMBER
2. SIGNALS SHOWN IN RECTANGLES ARE I/O CONNECTIONS.
   [A A I]
   - BOARD SIDE
   - PIN DESIGNATION
   - CONNECTOR DESIGNATION
1. FOR ASSEMBLY DRAWING SEE 701640

NOTES: UNLESS OTHERWISE SPECIFIED:

ADDRESS SELECTION LOGIC

PART/ASSY NO. & QTY PER ASSY	NOTE	PART OR IDENTIFYING NO.	NOMENCLATURE OR DESCRIPTION / MATERIAL	SPEC/SOURCE	CODE IDENT NO.	FIND NO.
						5
						4
						3
						2
						1

PARTS LIST

PART/ASSY REV LTR	PART NO.	NEXT ASSY	USED ON
		701640-100	PM-DZ11A

APPLICATION

DO NOT SCALE DRAWING

SCREW THREADS PER HANDBOOK H-28
COUNTERBORE AND SPOTFACE FILLET RADII TO BE .010 MAXIMUM
REMOVE ALL BURRS AND BREAK SHARP EDGES EQUIVALENT TO .010R
ROUGHNESS OF MACHINED SURFACES 125√ PER USAS B46.1
STANDARD HOLE TOLERANCE PER ANO 10387
TOLERANCES ON: .XX = ± .03 .XXX = ± .010 ANGLES = ± 0° 30'
INTERPRET DIMENSIONS AND TOLERANCES PER USAS Y14.5
DIMENSIONS ARE IN INCHES AND APPLY AFTER HEAT TREAT AND FINISH
UNLESS OTHERWISE SPECIFIED

CONTRACT NO.		
DRAWN	Wiencke	1-23-78
CHECK	Trunkis	3-2-78
ENGR	Olds	3-21-78
PROJ. ENGR		
PROD. DESIGN		3-21-79
		3-22-79
OTHER APPROVALS		

Plessey Microsystems

DWG TITLE SCHEMATIC DIAGRAM
8 LINE MULTIPLEXOR
PM-DZ11A

SIZE	CODE IDENT NO.	DWG NO.
D	52648	SD701640

SCALE: ~ | SHEET 1 OF 16

DISTR NO. 19290 J

SD701640 REV E

REVISIONS				
ZONE	LTR	DESCRIPTION	DATE	APPROVED
		SEE SHEET 1		

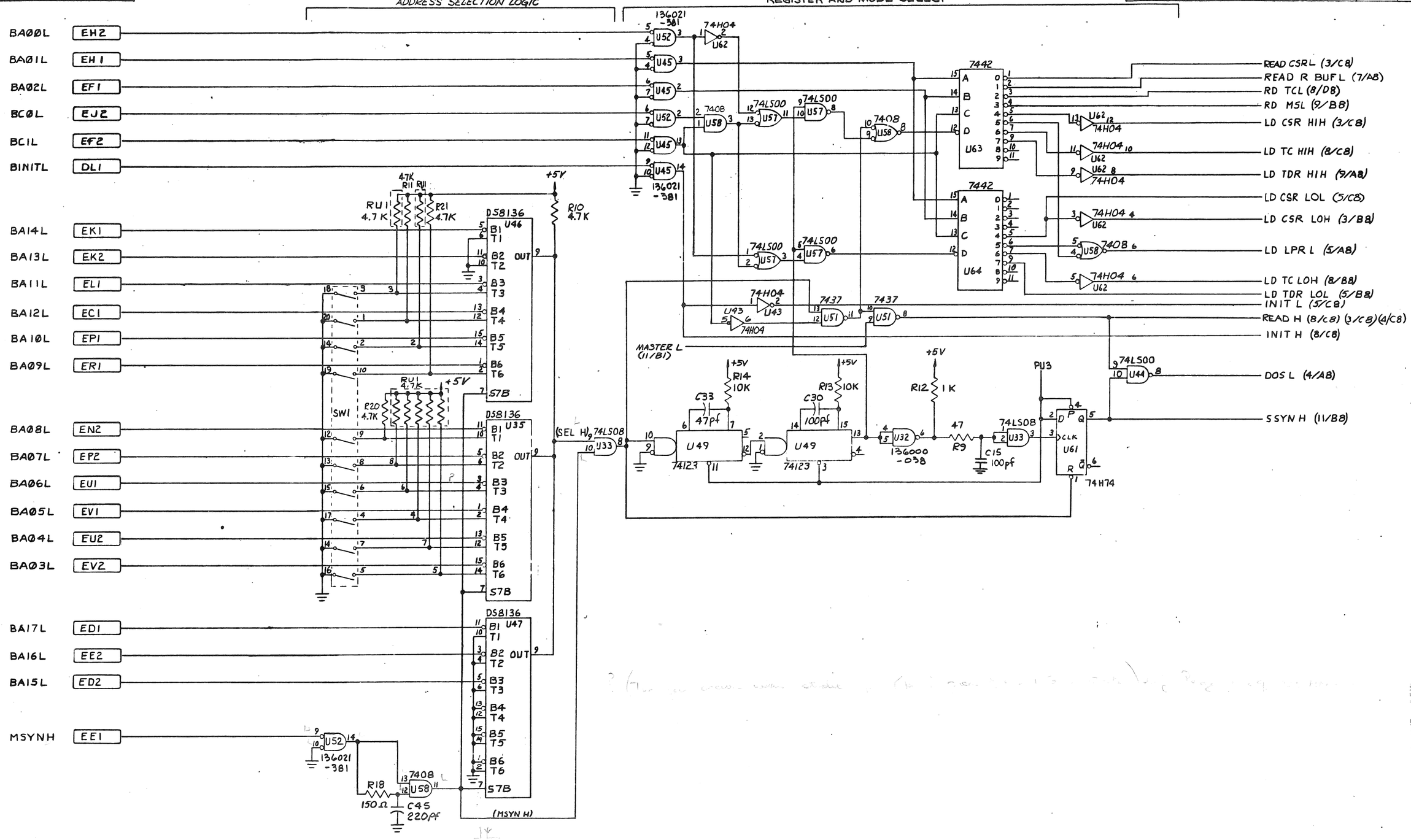

SIZE	CODE IDENT NO.	DWG NO.
D	52648	SD701640
SCALE: NONE	REV E	SHEET 2 OF 16
		DISTR NO.

REVISIONS				
ZONE	LTR	DESCRIPTION	DATE	APPROVED
		SEE SHEET 1		

CONTROL AND STATUS REGISTER

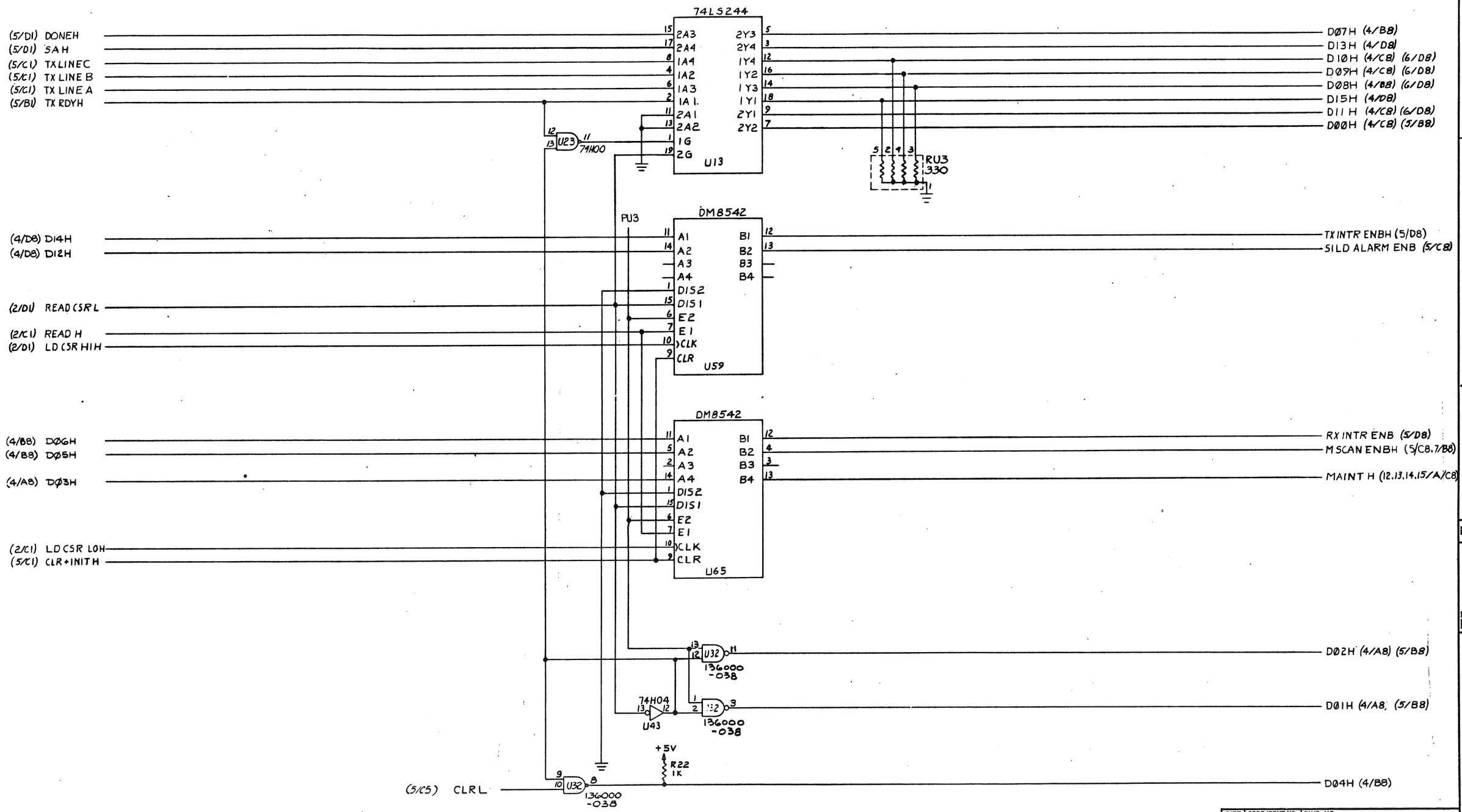

SIZE	CODE IDENT NO.	DWG NO.
D	52648	SD701640
SCALE: NONE	REV E	SHEET 3 OF 16
		DISTR NO.

REVISIONS				
ZONE	LTR	DESCRIPTION	DATE	APPROVED
		SEE SHEET 1		

INTERNAL DATA BUS TRANSCEIVERS

UNIBUS TRANSCEIVERS

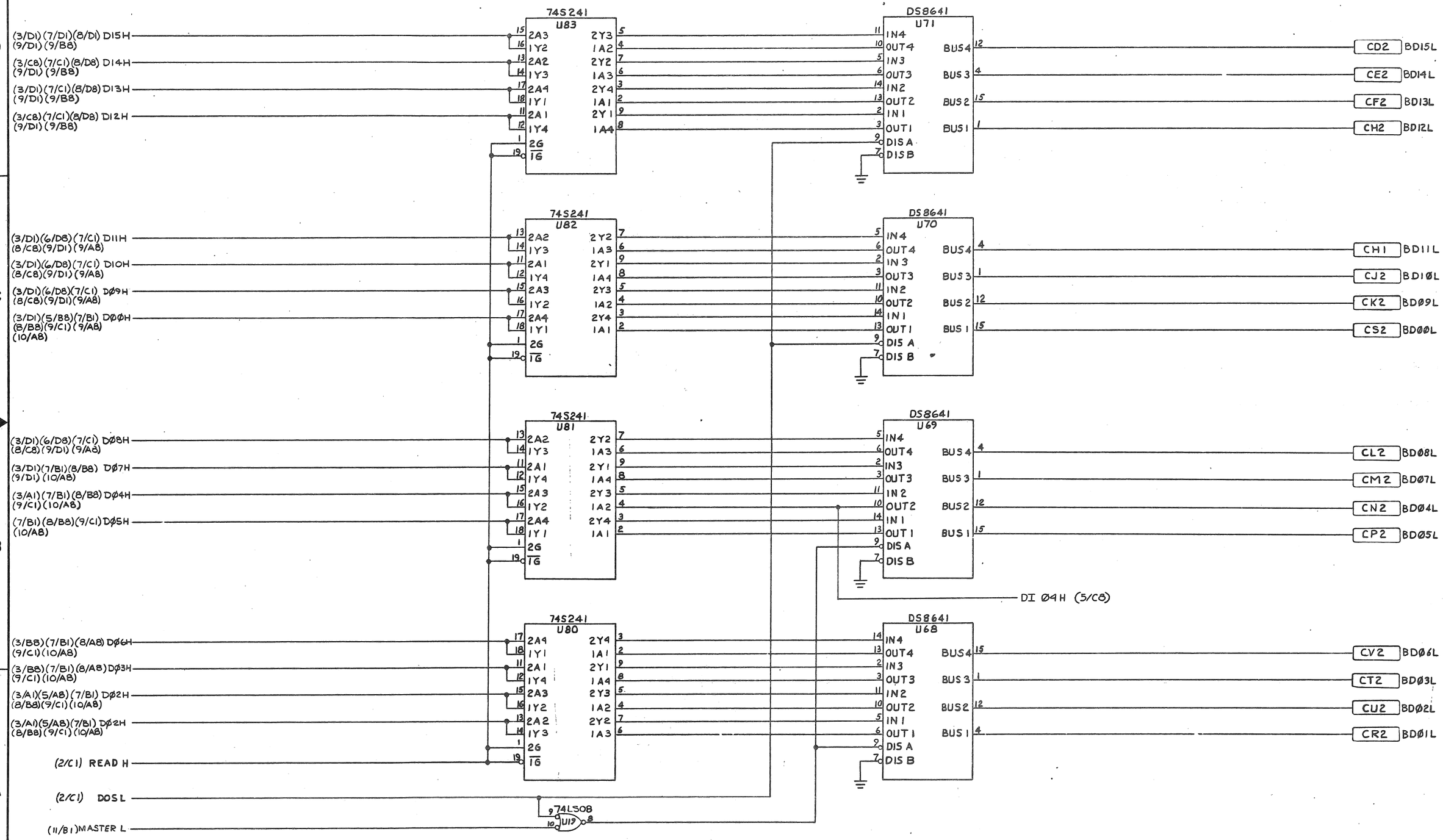

SIZE	CODE IDENT NO.	DWG NO.
D	52648	SD701640
SCALE: NONE	REV E	SHEET 4 OF 16

DISTR NO.

REVISIONS				
ZONE	LTR	DESCRIPTION	DATE	APPROVED
		SEE SHEET 1		

CONTROL LOGIC

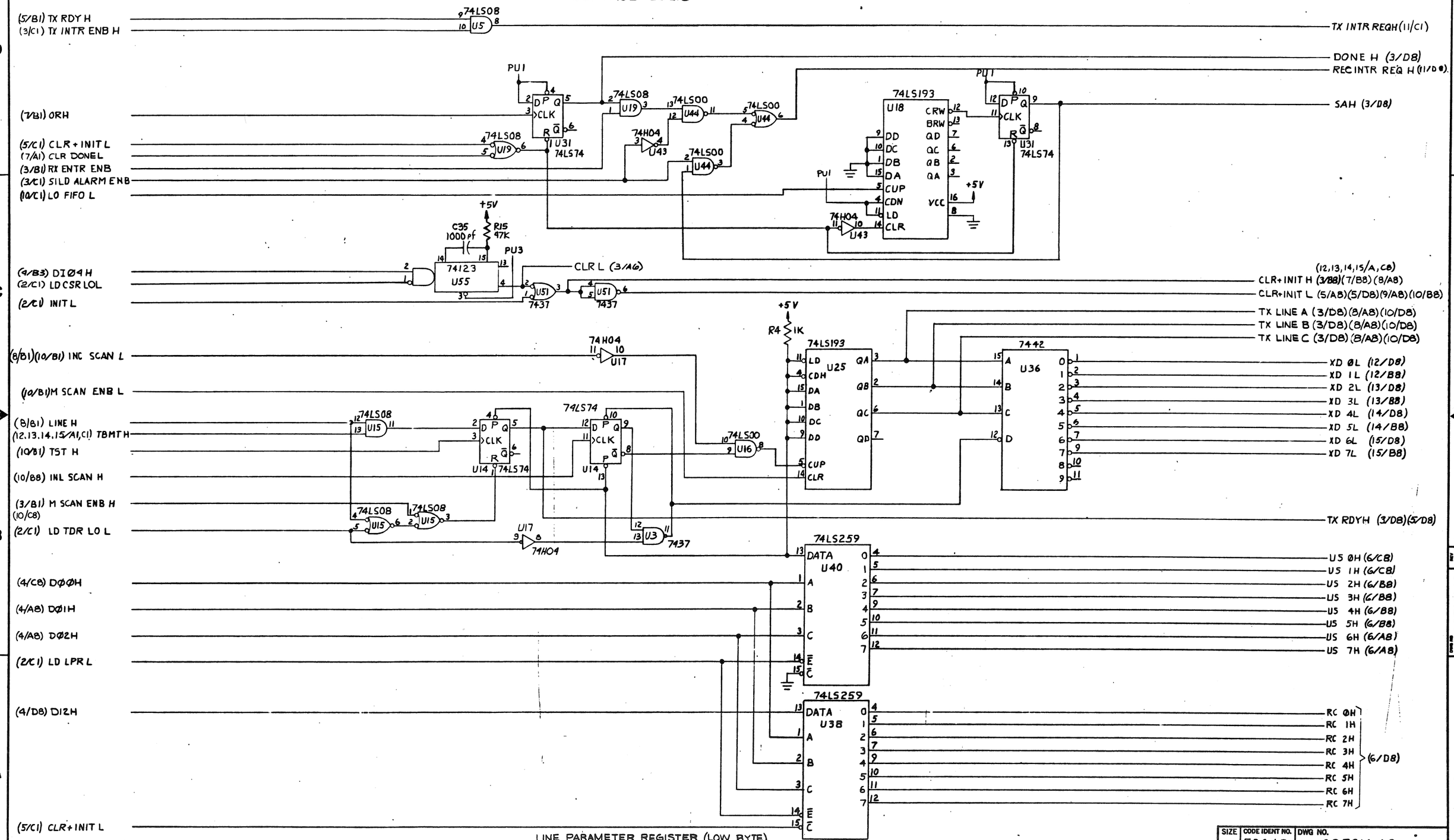

LINE PARAMETER REGISTER (LOW BYTE)

SIZE	CODE IDENT NO.	DWG NO.
D	52648	SD701640
SCALE: NONE	REV E	SHEET 5 OF 16
		DISTR NO.

REVISIONS				
ZONE	LTR	DESCRIPTION	DATE	APPROVED
		SEE SHEET 1		

LINE PARAMETER REGISTER (HIGH BYTE) AND BAUD RATE GENERATORS

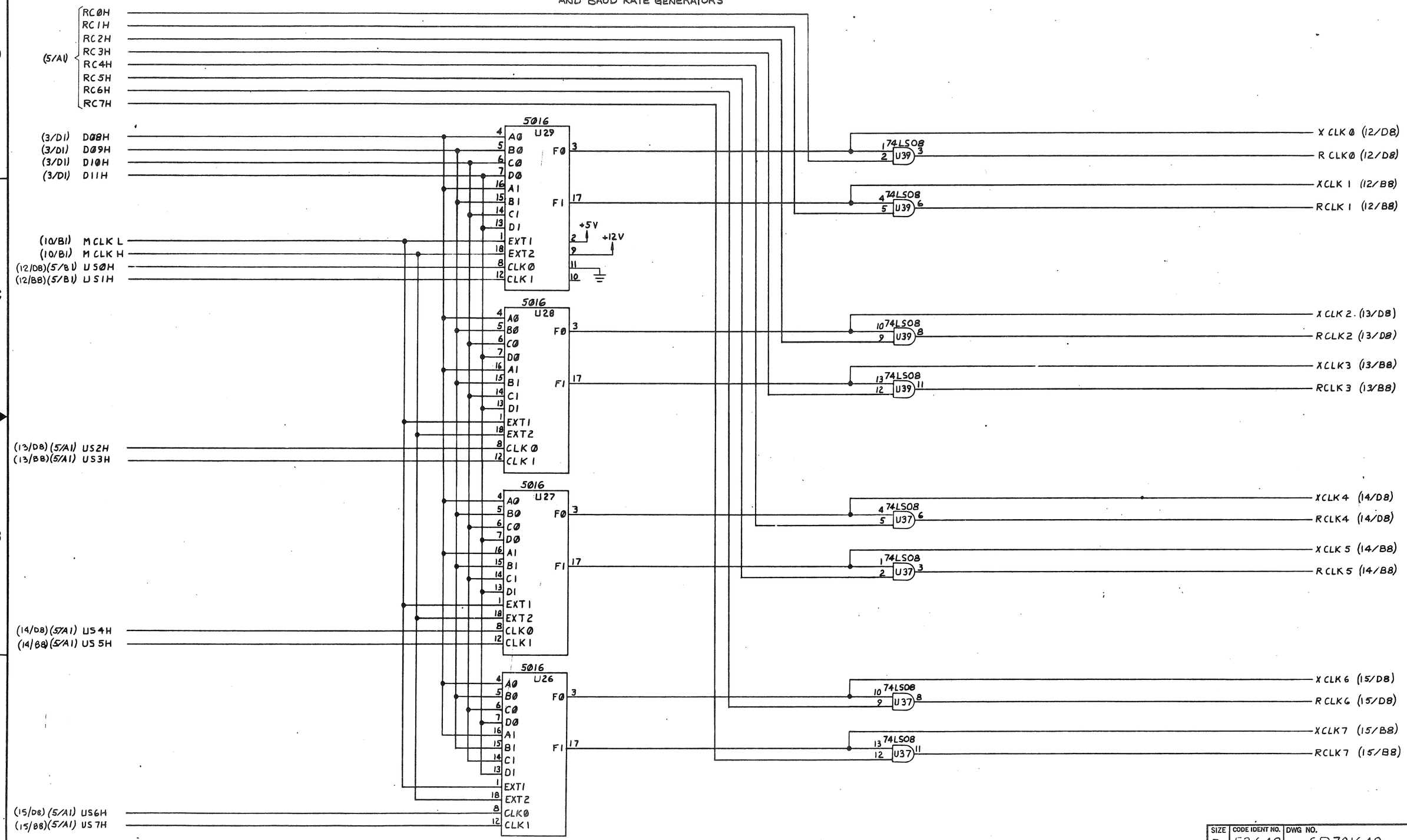

SIZE	CODE IDENT NO.	DWG NO.
D	52648	SD701640
SCALE: NONE	REV E	SHEET 6 OF 16
		DISTR NO.

REVISIONS				
ZONE	LTR	DESCRIPTION	DATE	APPROVED
		SEE SHEET 1		

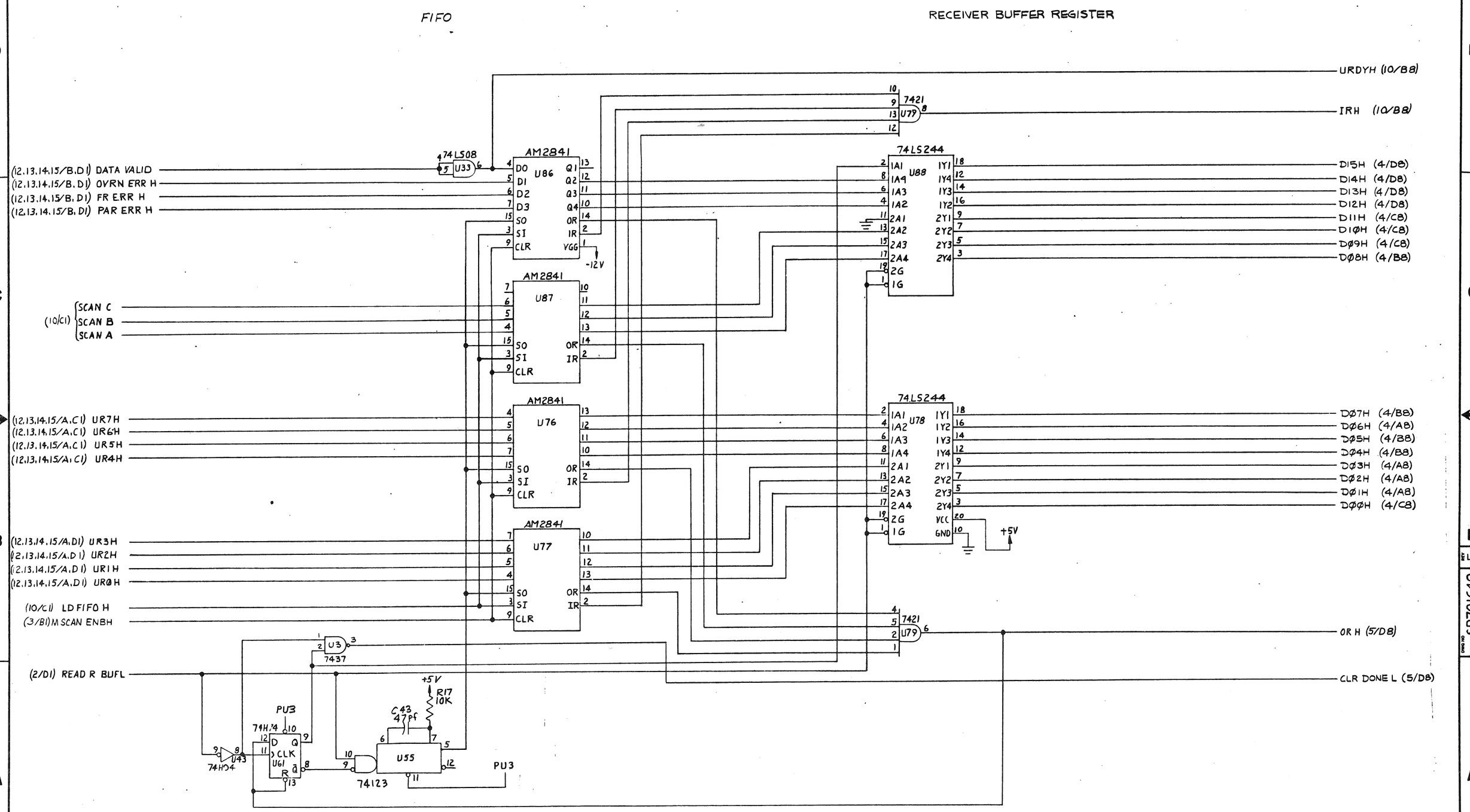

SIZE	CODE IDENT NO.	DWG NO.
D	52648	SD701640
SCALE: NONE	REV E	SHEET 7 OF 16
		DISTR NO.

REVISIONS				
ZONE	LTR	DESCRIPTION	DATE	APPROVED
		SEE SHEET 1		

TRANSMIT CONTROL REGISTER

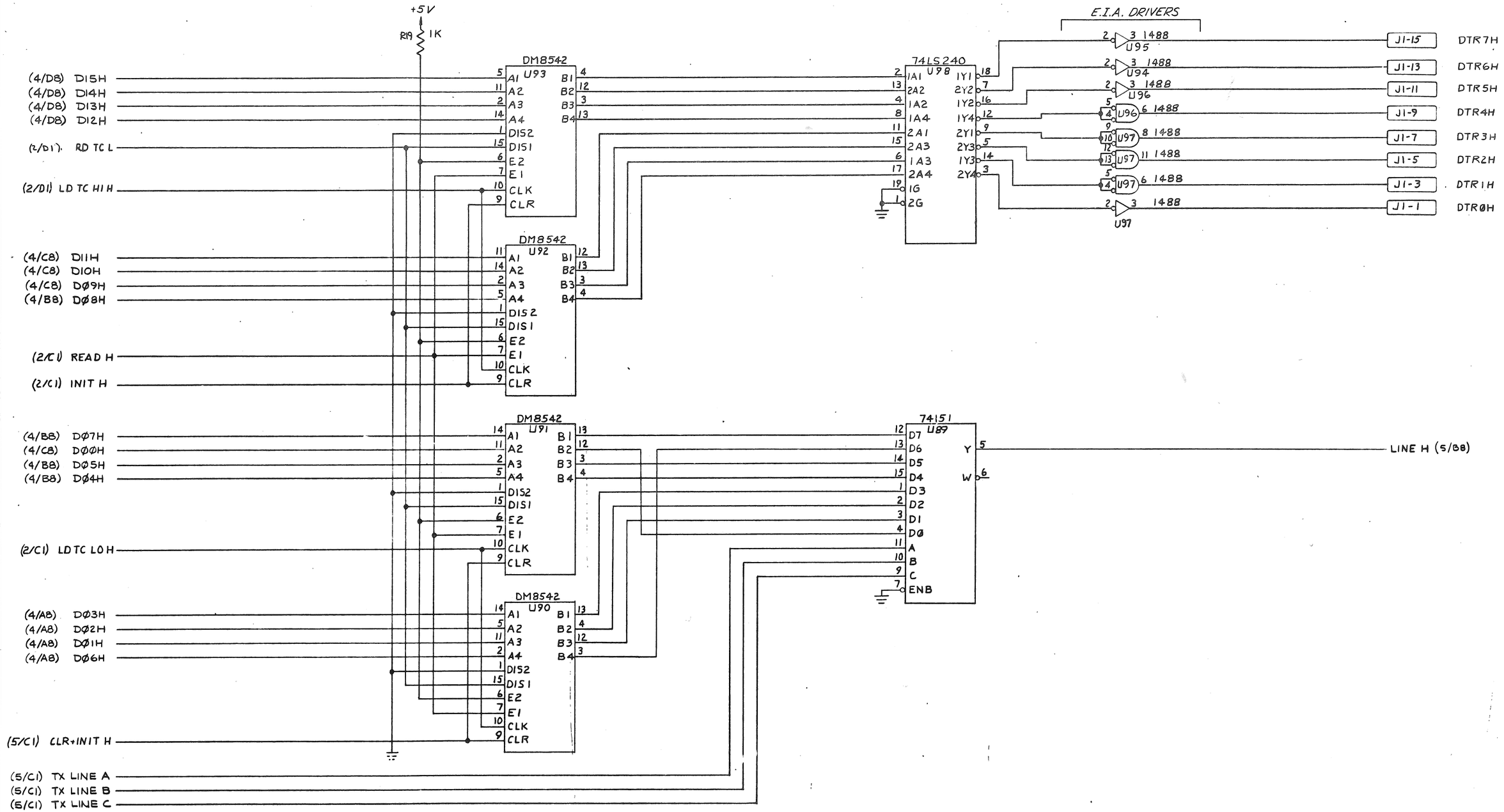

SIZE	CODE IDENT NO.	DWG NO.
D	52648	SD701640
SCALE: NONE	REV E	SHEET 8 OF 16

DISTR NO.

REVISIONS				
ZONE	LTR	DESCRIPTION	DATE	APPROVED
		SEE SHEET 1		

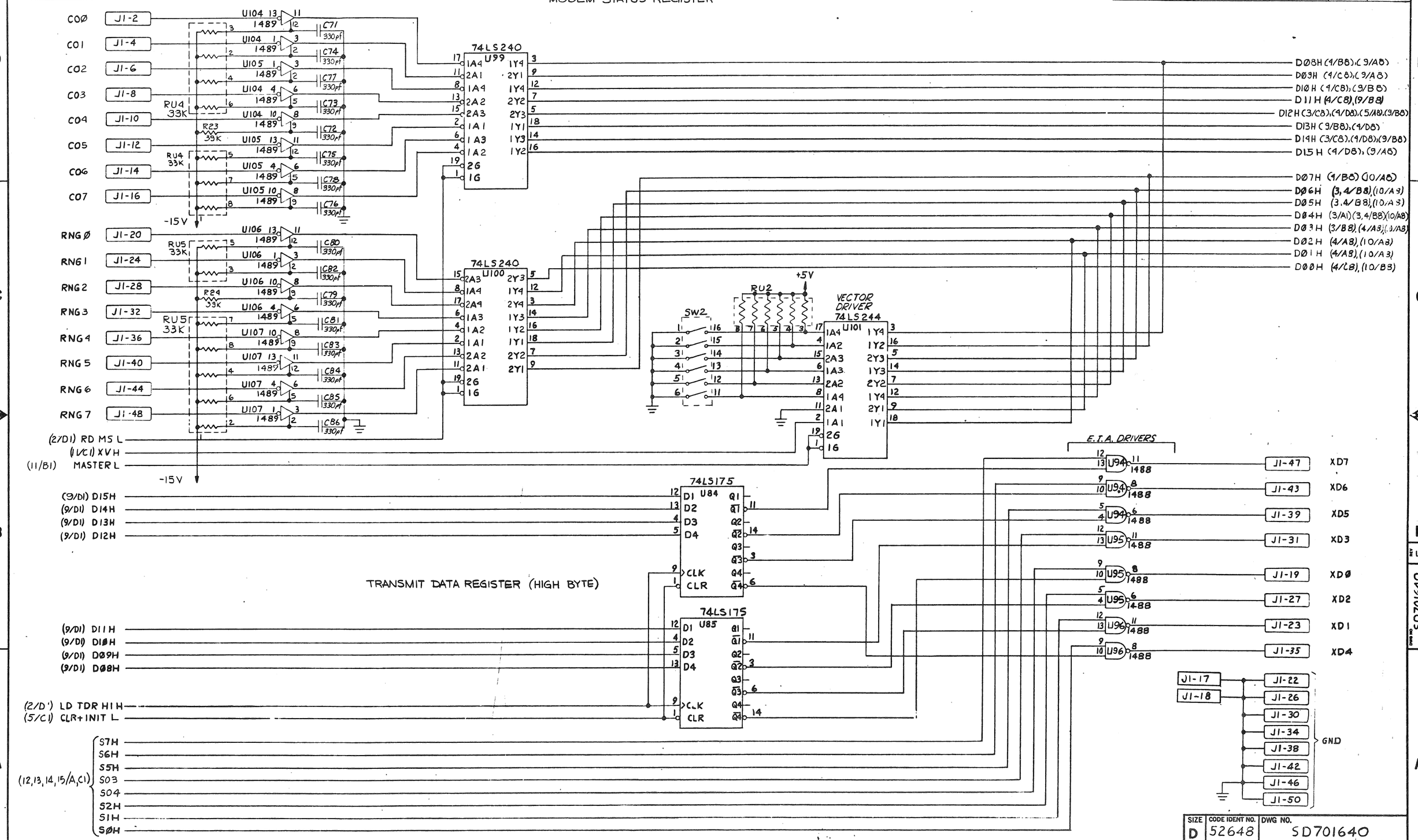

SIZE	CODE IDENT NO.	DWG NO.
D	52648	SD701640
SCALE: NONE	REV E	SHEET 2 OF 16
		DISTR NO.

REVISIONS				
ZONE	LTR	DESCRIPTION	DATE	APPROVED
		SEE SHEET 1		

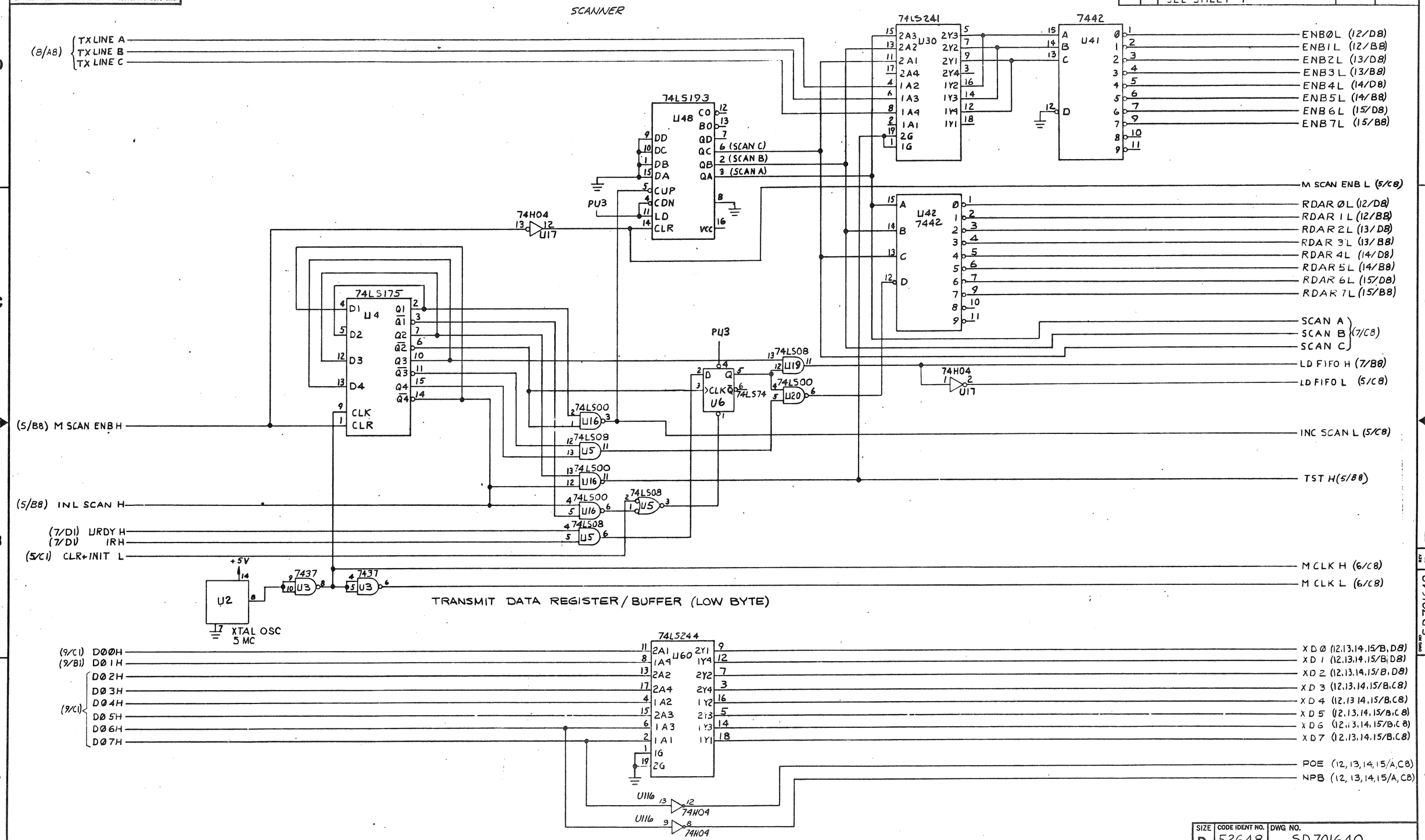

SIZE	CODE IDENT NO.	DWG NO.
D	52648	SD701640
SCALE: NONE	REV E	SHEET 2 OF 16
		DISTR NO.

INTERUPT CONTROL

REVISIONS				
ZONE	LTR	DESCRIPTION	DATE	APPROVED
		SEE SHEET 1		

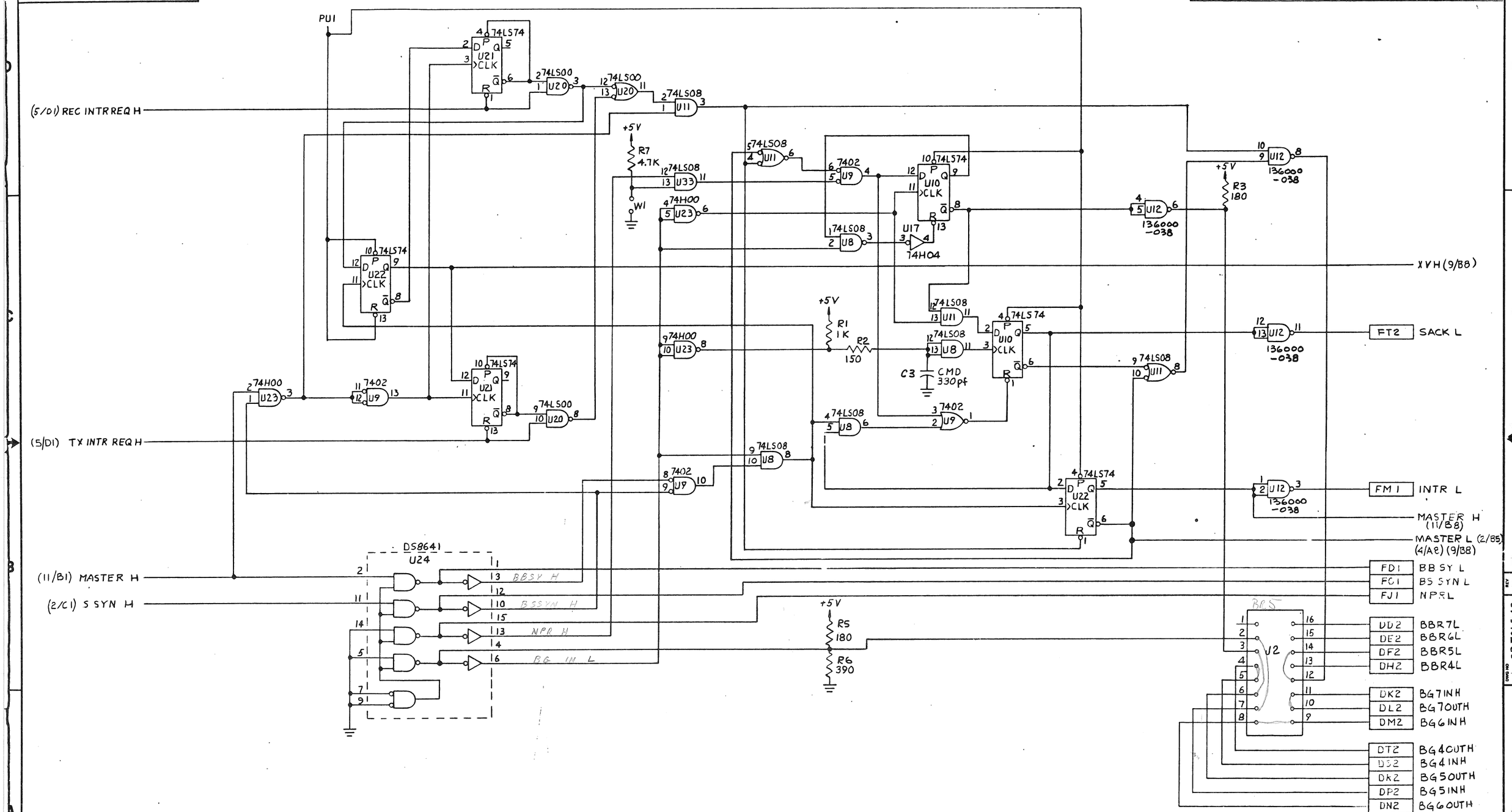

SIZE	CODE IDENT NO.	DWG NO.
D	52648	SD701640
SCALE: NONE	REV E	SHEET 11 OF 16
		DISTR NO.

REVISIONS				
ZONE	LTR	DESCRIPTION	DATE	APPROVED
		SEE SHEET 1		

U.A.R.T.

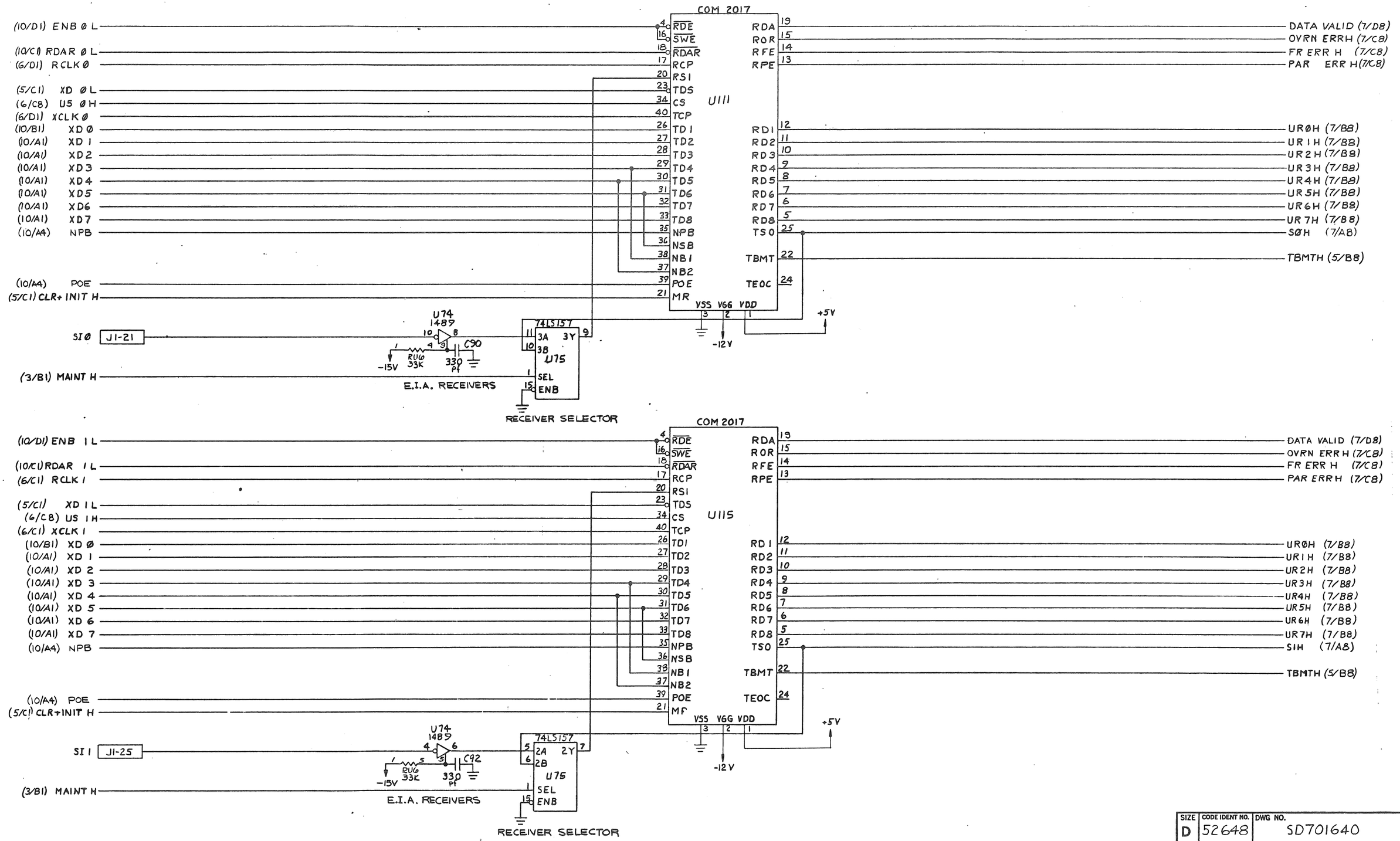

SIZE	CODE IDENT NO.	DWG NO.
D	52648	SD701640
SCALE: NONE	REV E	SHEET 12 OF 16
		DISTR NO.

REVISIONS				
ZONE	LTR	DESCRIPTION	DATE	APPROVED
		SEE SHEET 1		

U.A.R.T.

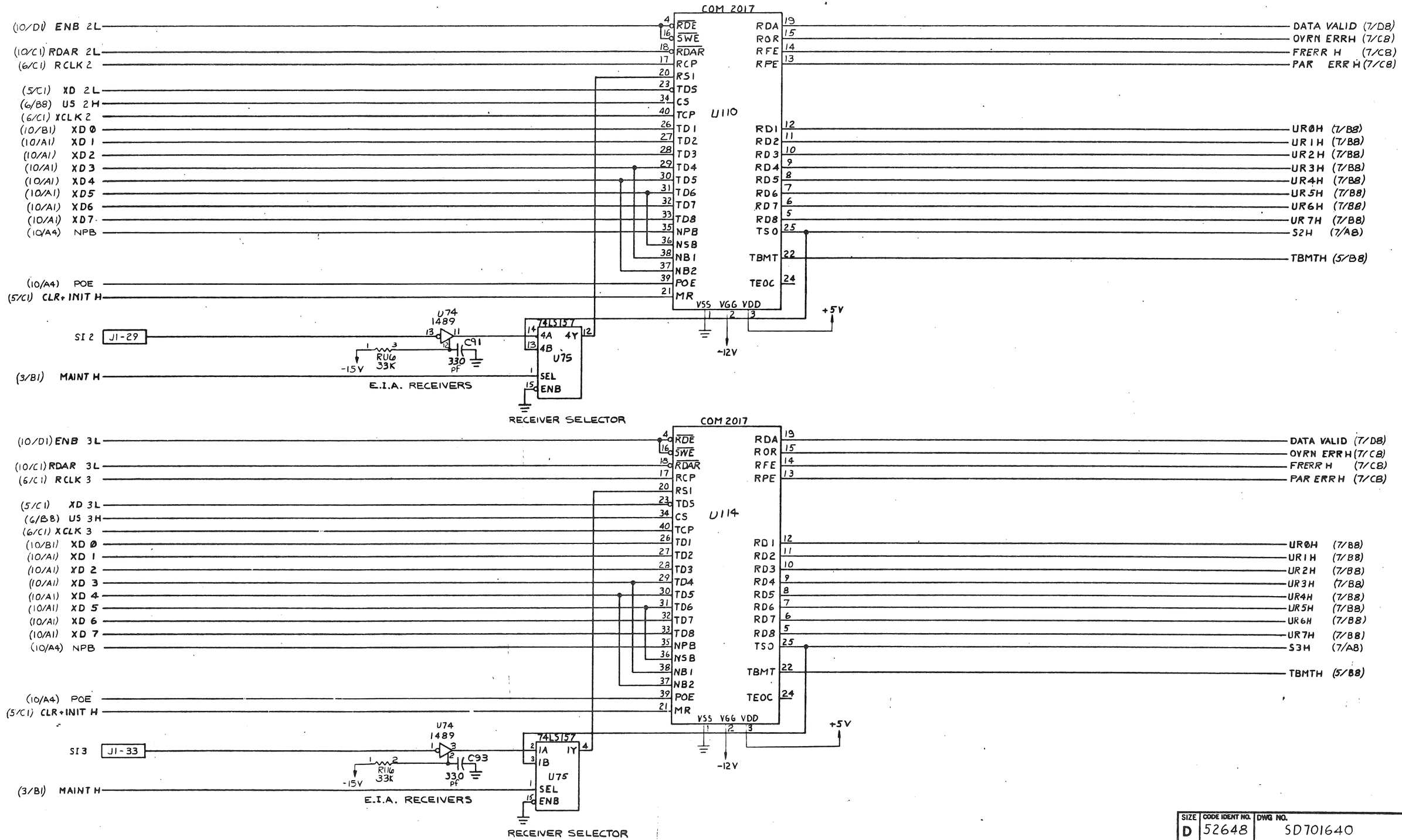

SIZE	CODE IDENT NO.	DWG NO.
D	52648	SD701640
SCALE: NONE	REV E	SHEET 13 OF 16

DISTR NO.

SD701640 E

REVISIONS				
ZONE	LTR	DESCRIPTION	DATE	APPROVED
		SEE SHEET 1		

U.A.R.T.

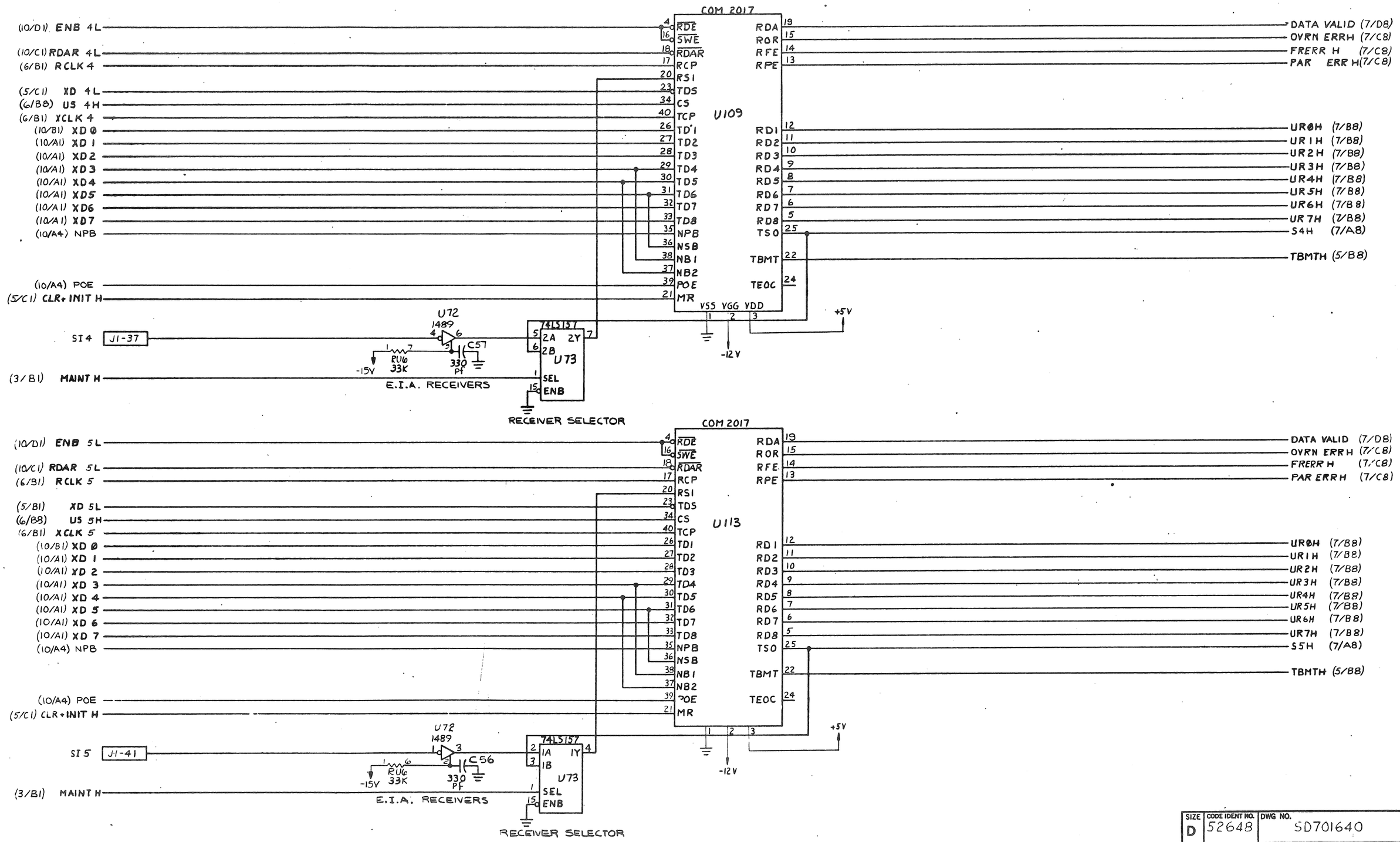

SIZE	CODE IDENT NO.	DWG NO.
D	52648	SD701640
SCALE: NONE	REV E	SHEET 14 OF 16
		DISTR NO.

REVISIONS				
ZONE	LTR	DESCRIPTION	DATE	APPROVED
		SEE SHEET 1		

U.A.R.T.

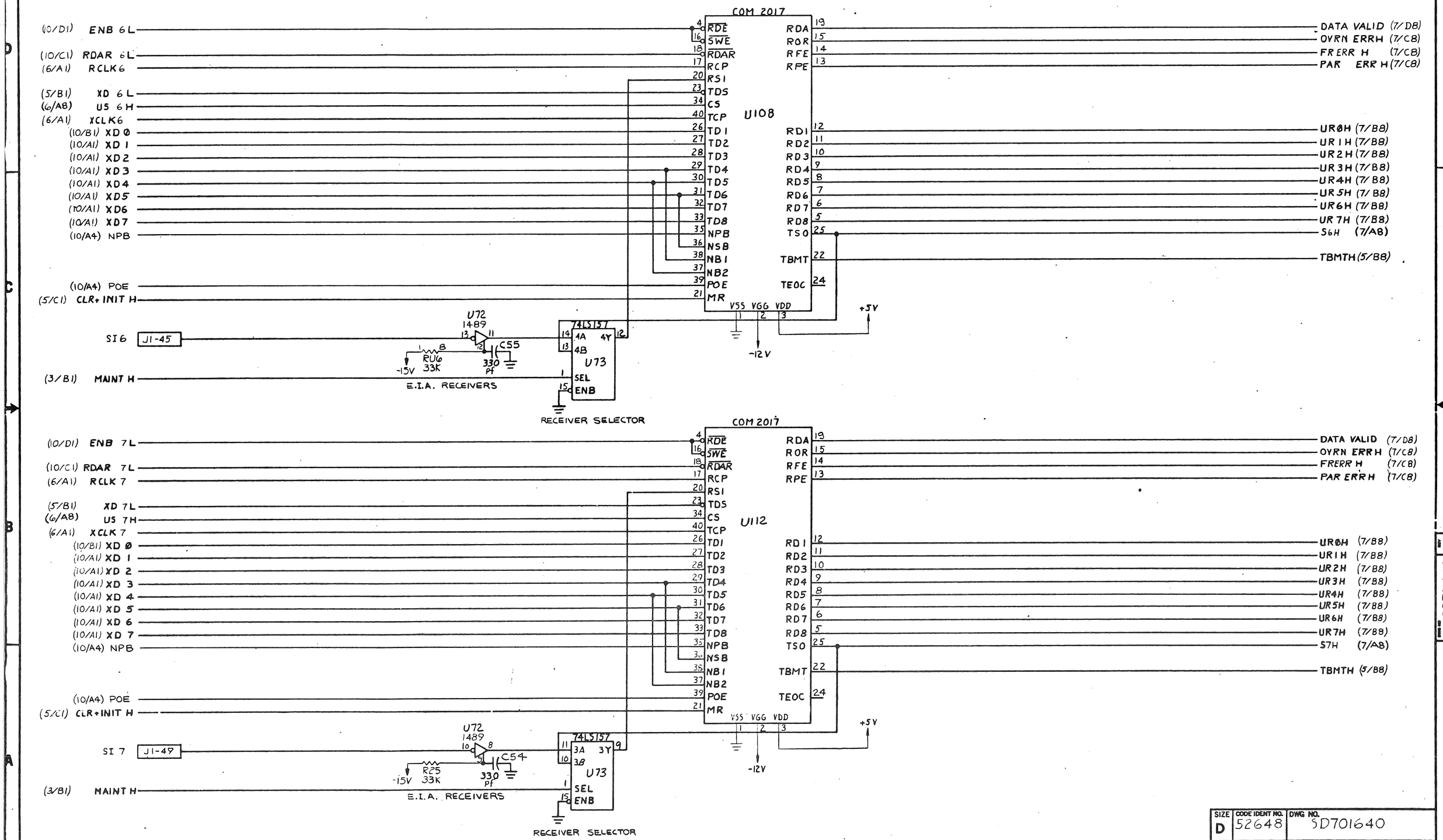

SIZE	CODE IDENT NO.	DWG NO.
D	52648	SD701640
SCALE: NONE	REV E	SHEET 15 OF 16
		DISTR NO.

SD701640

REVISIONS				
ZONE	LTR	DESCRIPTION	DATE	APPROVED
		SEE SHEET 1		

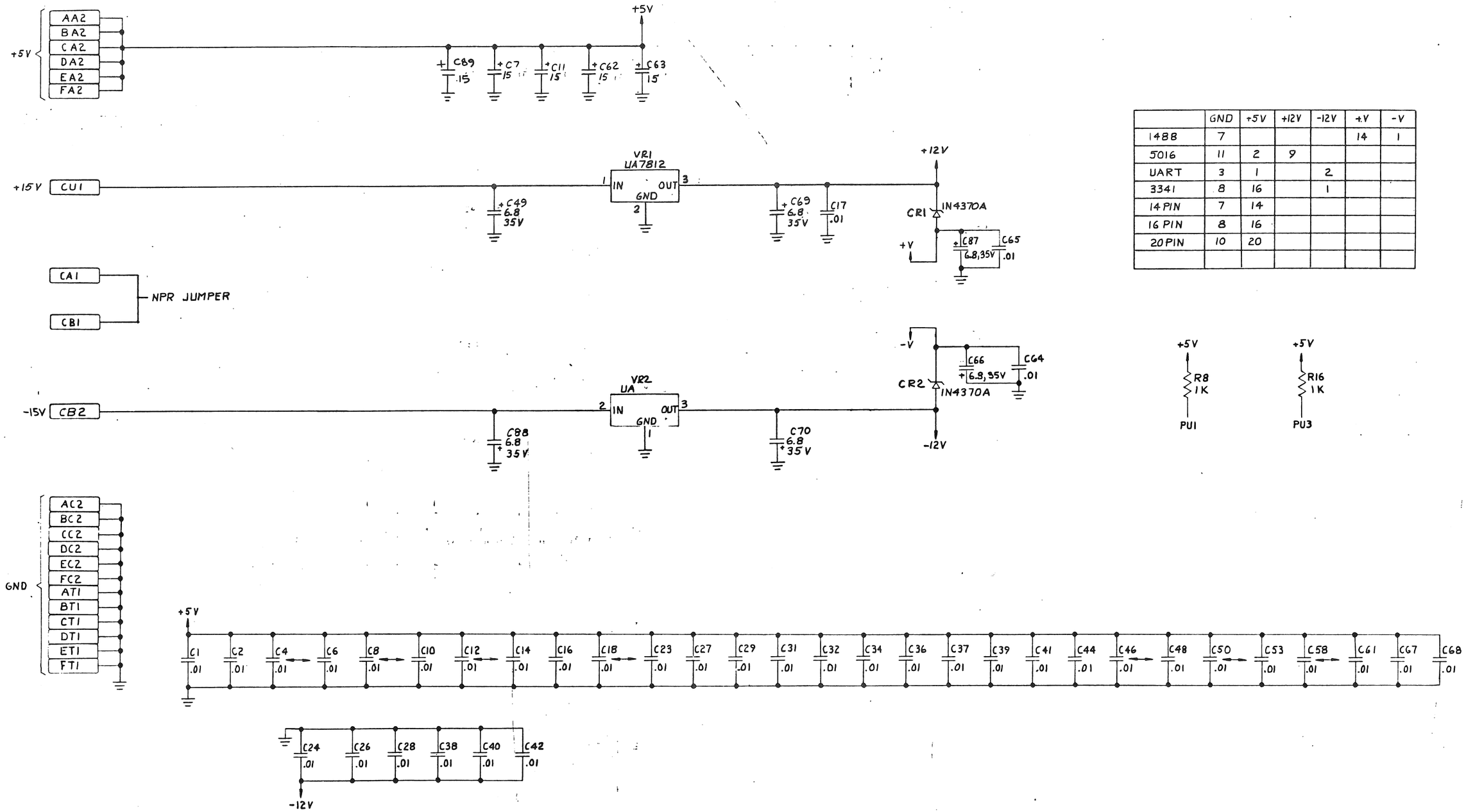

	GND	+5V	+12V	-12V	+V	-V
1488	7				14	1
5016	11	2	9			
UART	3	1		2		
3341	8	16		1		
14 PIN	7	14				
16 PIN	8	16				
20 PIN	10	20				

SIZE	CODE IDENT NO.	DWG NO.
D	52648	SD701640
SCALE: NONE	REV E	SHEET 16 OF 16
		DISTR NO.

REVISIONS				
ZONE	LTR	DESCRIPTION	DATE	APPROVED
/	A	REL TO PROD EO 2541	9-15-78	[illegible]

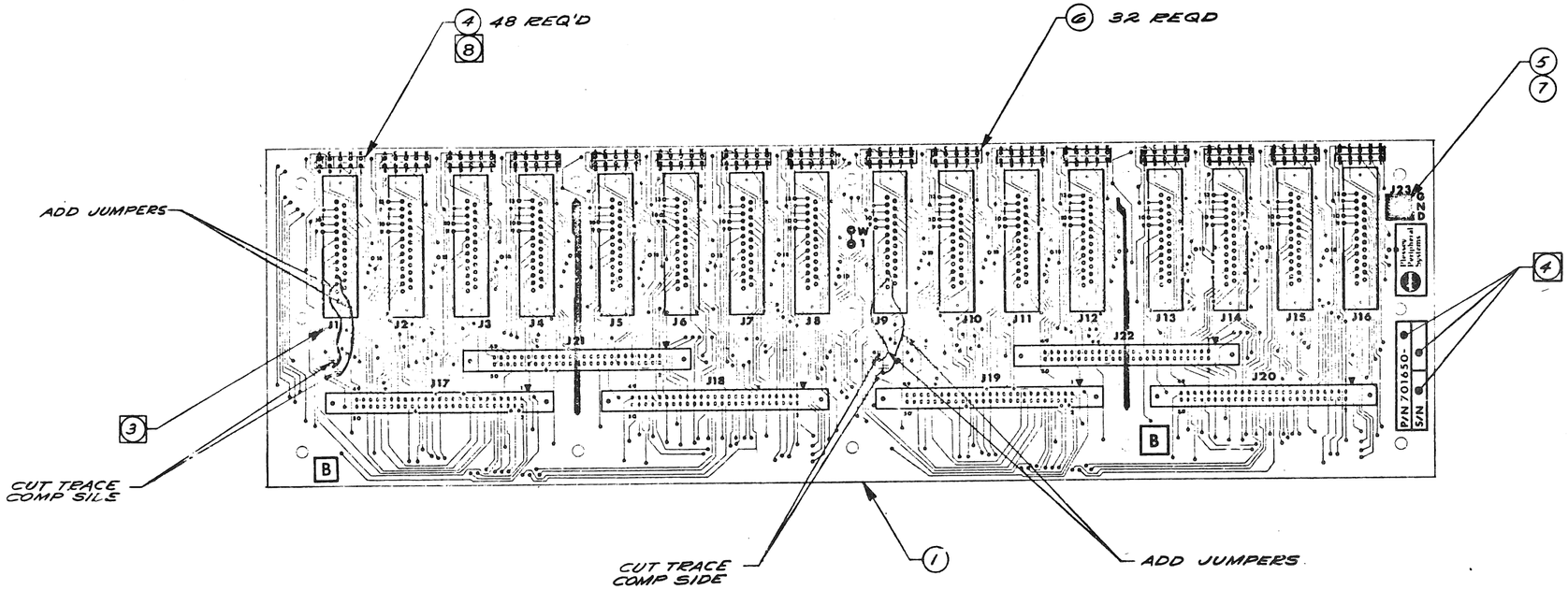

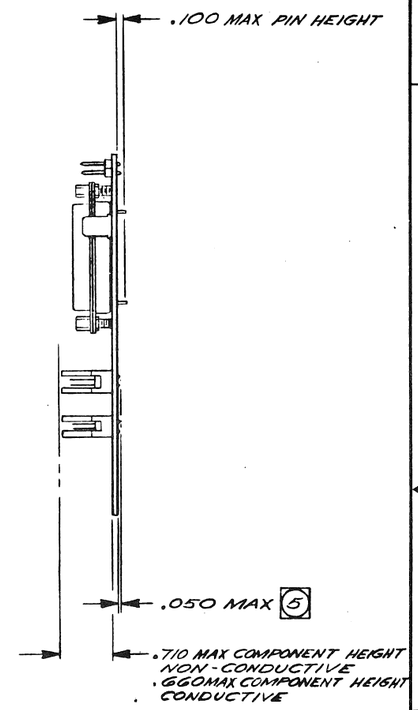

PRODUCTION RELEASE

8. INSTALL SHUNT ASSEMBLIES, ITEM 4, BETWEEN A&B, C&D, H&J. 16 PLACES
7. J21 AND J22 NOT USED ON -100 VERSION.
6. INSTALL ITEMS NOTED AFTER FLOW SOLDER
5. COMPONENT LEAD TRIM AND SOLDER BUILD-UP TO BE AS NOTED
4. MARK ASSEMBLY VERSION NUMBER, LATEST REVISION LETTER AND SERIAL NUMBER WITH .12 HIGH CHARACTERS USING BLACK INK PER MIL-M-13231, GROUP III. LOCATION APPROX AS SHOWN.
3. COMPONENT DESIGNATIONS ARE FOR REFERENCE ONLY AND DO NOT APPEAR ON PART.
2. FOR SCHEMATIC DIAGRAM SEE SD701650.
1. ASSEMBLE AND INSPECT PER WORKMANSHIP STANDARDS MANUAL.

NOTES: UNLESS OTHERWISE SPECIFIED

PART/ASSY NO. & QTY PER ASSY	NOTE	PART OR IDENTIFYING NO.	NOMENCLATURE OR DESCRIPTION / MATERIAL	SPEC/SOURCE	CODE IDENT NO.	FIND NO.
						5
						4
						3
						2
X			FOR PARTS LIST SEE PL701650-100			1
-100						

PARTS LIST

PART/ASSY REV LTR		
		A
-100	FINAL	PM-DZ11A
PART NO.	NEXT ASSY	USED ON

APPLICATION

DO NOT SCALE DRAWING

SCREW THREADS PER HANDBOOK H-28
COUNTERBORE AND SPOTFACE FILLET RADII TO BE .015 MAXIMUM
REMOVE ALL BURRS AND BREAK SHARP EDGES EQUIVALENT TO .010R
ROUGHNESS OF MACHINED SURFACES 125√ PER USAS B46.1
STANDARD HOLE TOLERANCE PER ANSI B32.7
TOLERANCES ON: .XX = ± .03 .XXX = ± .010 ANGLES = ± 0° 30'
INTERPRET DIMENSIONS AND TOLERANCES PER USAS Y14.5
DIMENSIONS ARE IN INCHES AND APPLY AFTER HEAT TREAT AND FINISH
UNLESS OTHERWISE SPECIFIED

CONTRACT NO.		
DRAWN	TOM COMEY	6-5-78
CHECK	[illegible]	6-13-78
ENGR	[illegible]	6-16-78
PROJ. ENGR		
PROD. DESIGN	[illegible]	7-17-78
OTHER APPROVALS		

Plessey Memories Incorporated
Santa Ana, California

DWG TITLE: BOARD ASSEMBLY, CONNECTOR PANEL, PM-DZ11A

SIZE	CODE IDENT NO.	DWG NO.
D	52648	701650

SCALE: 1/1 SHEET 1 OF 1

DISTR NO. [illegible]

FORM NO. 600012

701650 A

PARTS LIST — Plessey Microsystems

ASSY TITLE: BOARD ASSEMBLY CONNECTOR PANEL

		DATE
PREPARED BY	R.P.HYTTINEN	2-27-78
CHECKED BY	L. Trunkis	3-8-78
RESP ENG	P. Tolan	3-9-78
APPRV		
DOC CONTROL	[illegible]	2-28-78

PARTS LIST NO. PL-701650-100 — REV LTR A

CODE IDENT NO. 52648 — DS NO. 1234570 — SS NO. B — SH 1 OF 3

MODEL NO. PM-DZ11A

LTR	DESCRIPTION	DATE	APPROVED	LTR	DESCRIPTION	DATE	APPROVED
A	REL TO PROD EO 2541	9-15-78	[illegible]				

PRODUCTION RELEASE

REV STATUS OF SHEETS											
REV LTR	A	A	A								
SHEET	1	2	3	4	5	6	7	8	9	10	

PARTS LIST — Plessey Microsystems — CODE IDENT NO. 52648 — PARTS LIST NO. PL701650-100 — SH 3 — REV LTR A

CONTROL DIM	NOTE	QTY REQD	PART OR IDENTIFYING NO.	NOMENCLATURE OR DESCRIPTION	SPECIFICATION	CODE IDENT NO.	ZONE	FIND NO.	SYM	C/I USAGE: C/I CODE	INV ON HAND	PAR	UNIT COST
		1	701649-001	P.W.B. / CONNECTOR PANEL PM-DZ11A				1					
	6	16	DB-25P-F179	CONNECTOR / 25 CONTACTS, PLUG, WW	CINCH			2					
		4	3433-2002	CONNECTOR / 50 CONTACT, PIN/SOLDER TAIL	3M			3					
		48	530153-2	SHUNT ASSY	AMP			4					
		1	60080-2	RECEPTACLE / TAB	AMP			5					
	6	32	87225-4	5 POST STRIP	AMP			6					
		1	SE-37	RIVET, TUBULAR — BRASS	USM CORP.			7					
								8					
		32	D-20418-2	SCREW, LOCK, FEMALE	CINCH			9					
								10					
		REF.	SN 63 WRAP 3	SOLDER	QQ-S-571			11					
								12					
								13					

PARTS LIST — Plessey Microsystems — CODE IDENT NO. 52648 — PARTS LIST NO. PL701650-100 — SH 2 — REV LTR A

CROSS INDEX OF REFERENCE DESIGNATIONS TO FIND NO.

REFERENCE DESIGNATION	FIND NO.	REFERENCE DESIGNATION	FIND NO.	REFERENCE DESIGNATION	FIND NO.	REFERENCE DESIGNATION	FIND NO.
J1 THRU 16	2						
J17 THRU 20	3						
	4						
J23	5						

SIZE B — CODE IDENT NO. 52648 — DWG NO. PL 701650-100 — REV A — SHEET 1 of 1 — SCALE

Form 000087

SD701650

REVISIONS				
ZONE	LTR	DESCRIPTION	DATE	APPROVED
/	A	REL TO PROD EO 2541	9-15-78	

PRODUCTION RELEASE

PART/ASSY NO. & QTY PER ASSY			NOTE	PART OR IDENTIFYING NO.	NOMENCLATURE OR DESCRIPTION / MATERIAL	SPEC/SOURCE	CODE IDENT NO.	FIND NO.
								5
								4
								3
								2
								1

PARTS LIST

PART/ASSY REV LTR

PART NO.	NEXT ASSY	USED ON
/	701650-100	PM-DZ11A

APPLICATION

DO NOT SCALE DRAWING

SCREW THREADS PER HANDBOOK H-28
COUNTERBORE AND SPOTFACE FILLET RADII TO BE .010 MAXIMUM
REMOVE ALL BURRS AND BREAK SHARP EDGES EQUIVALENT TO .010R
ROUGHNESS OF MACHINED SURFACES 125√ PER USAS B46.1
STANDARD HOLE TOLERANCE PER AND 10387
TOLERANCES ON: .XX = ± .03 .XXX = ± .010 ANGLES = ± 0° 30'
INTERPRET DIMENSIONS AND TOLERANCES PER USAS Y14.5
DIMENSIONS ARE IN INCHES AND APPLY AFTER HEAT TREAT AND FINISH
UNLESS OTHERWISE SPECIFIED

CONTRACT NO.

DRAWN	Z. Wiener	2-16-78
CHECK	L. Turnkis	3-3-78
ENGR	R. Clelia	3-7-78
PROJ. ENGR		
PROD. DESIGN		
OTHER APPROVALS		3-24-78

Plessey Peripheral Systems

DWG TITLE SCHEMATIC DIAGRAM DISTRIBUTION PANEL PM-DZ11A

SIZE	CODE IDENT NO.	DWG NO.
D	52648	SD701650

SCALE: — SHEET 1 OF 5

DISTR NO. 19a9c0 J

REV A

DWG NO SD701650

NOTES: UNLESS OTHERWISE SPECIFIED

SD701650

REVISIONS				
ZONE	LTR	DESCRIPTION	DATE	APPROVED
		SEE SHEET 1		

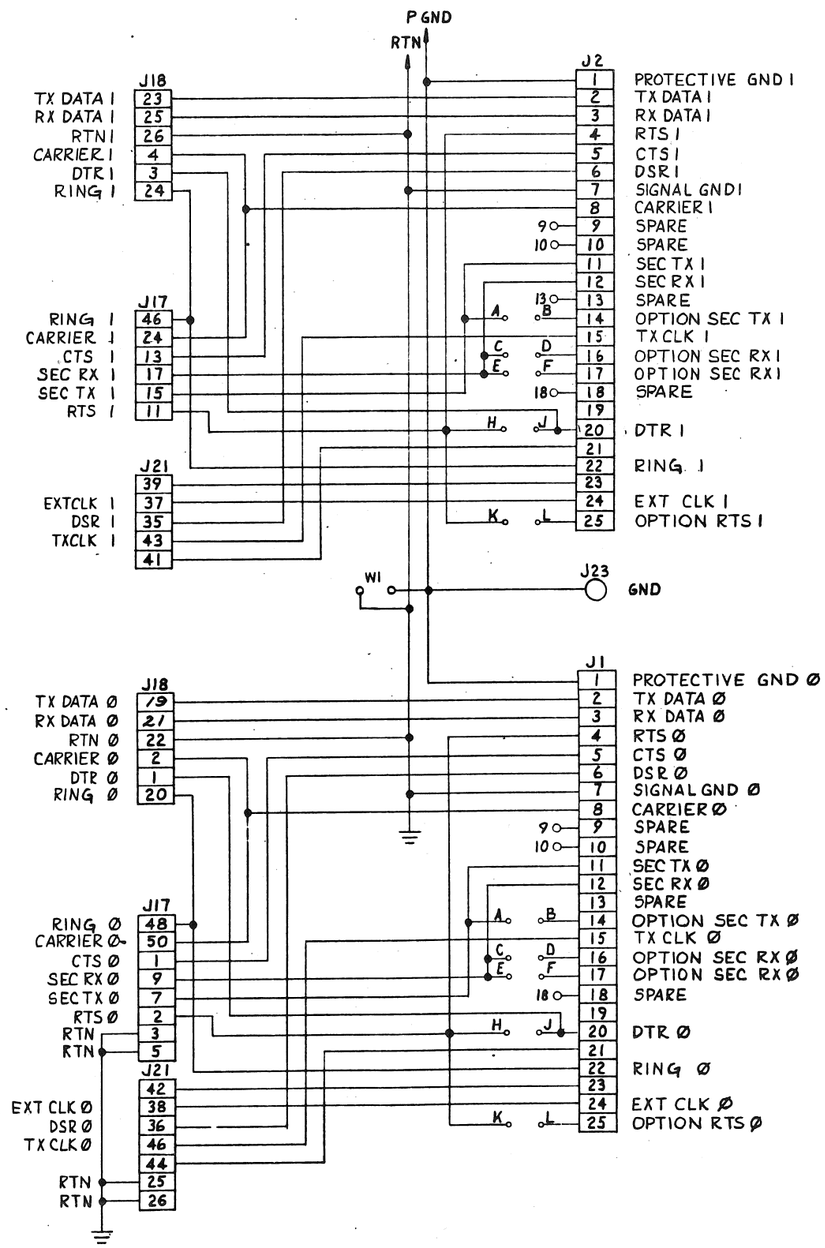

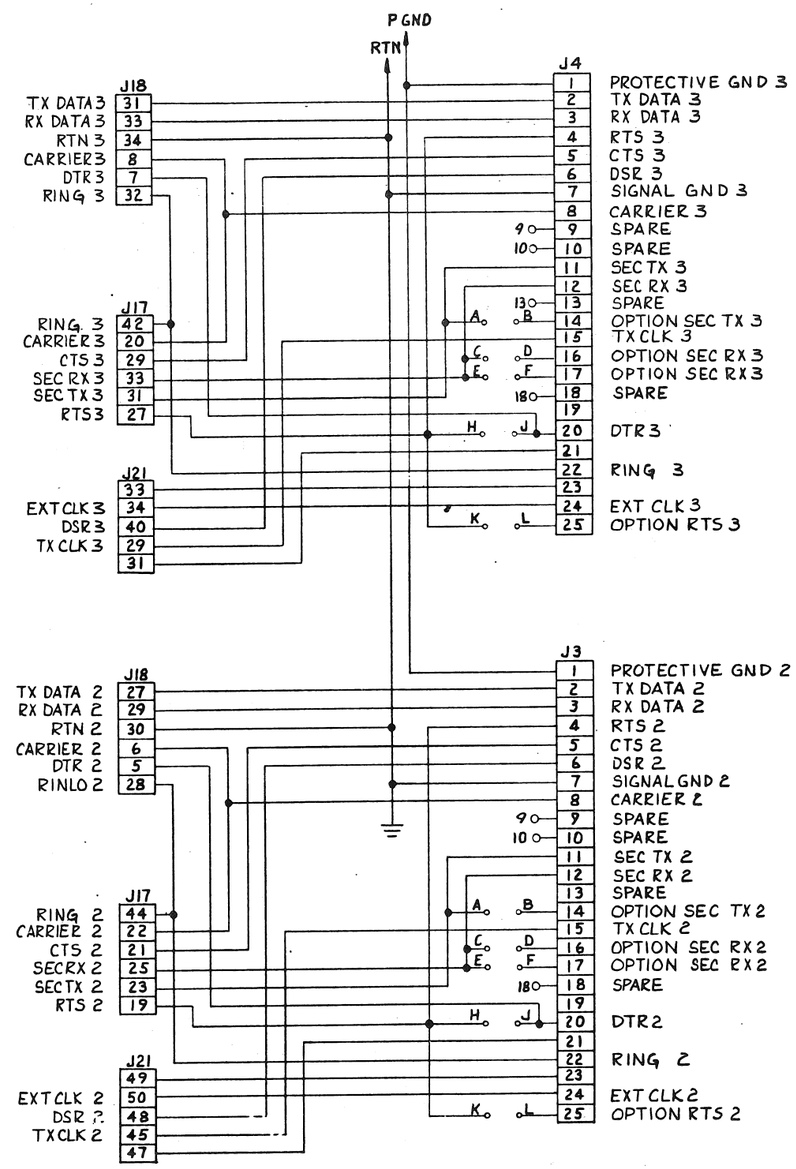

SIZE	CODE IDENT NO.	DWG NO.
D	52648	SD701650
SCALE: —	A	SHEET 2 OF
		DISTR NO.

SD701650

REVISIONS				
ZONE	LTR	DESCRIPTION	DATE	APPROVED
		SEE SHEET 1		

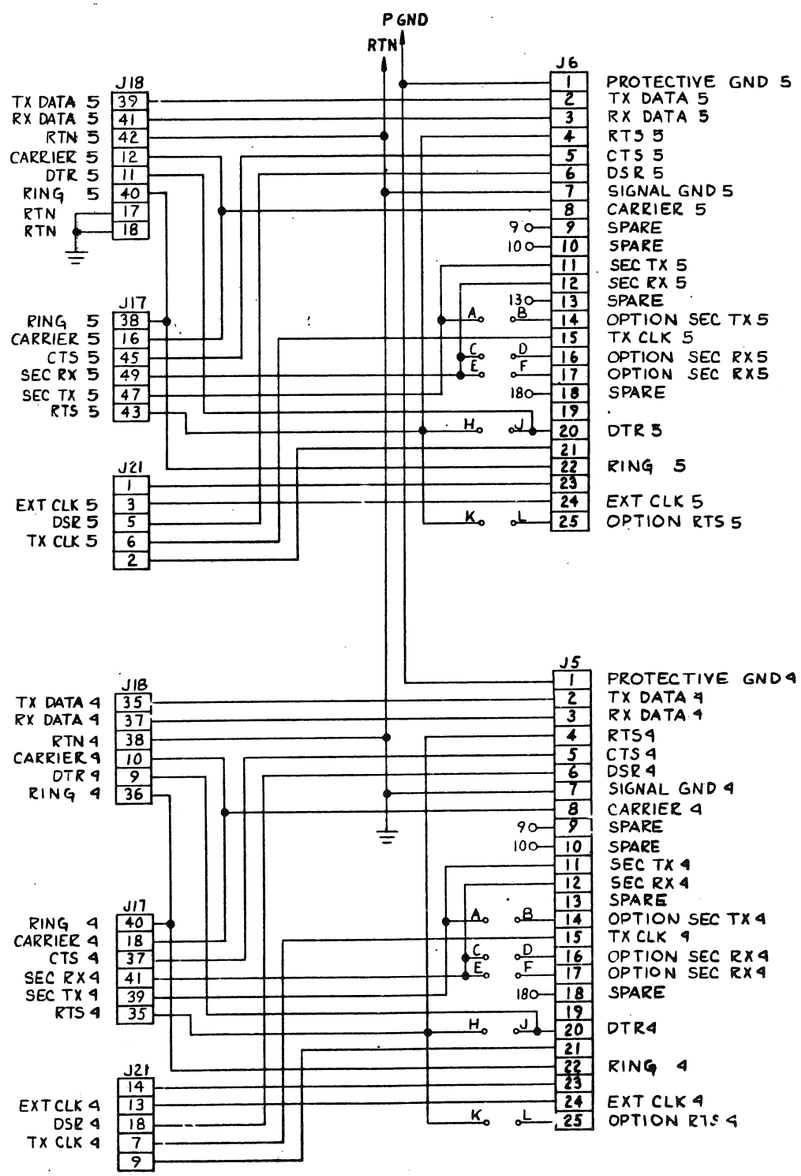

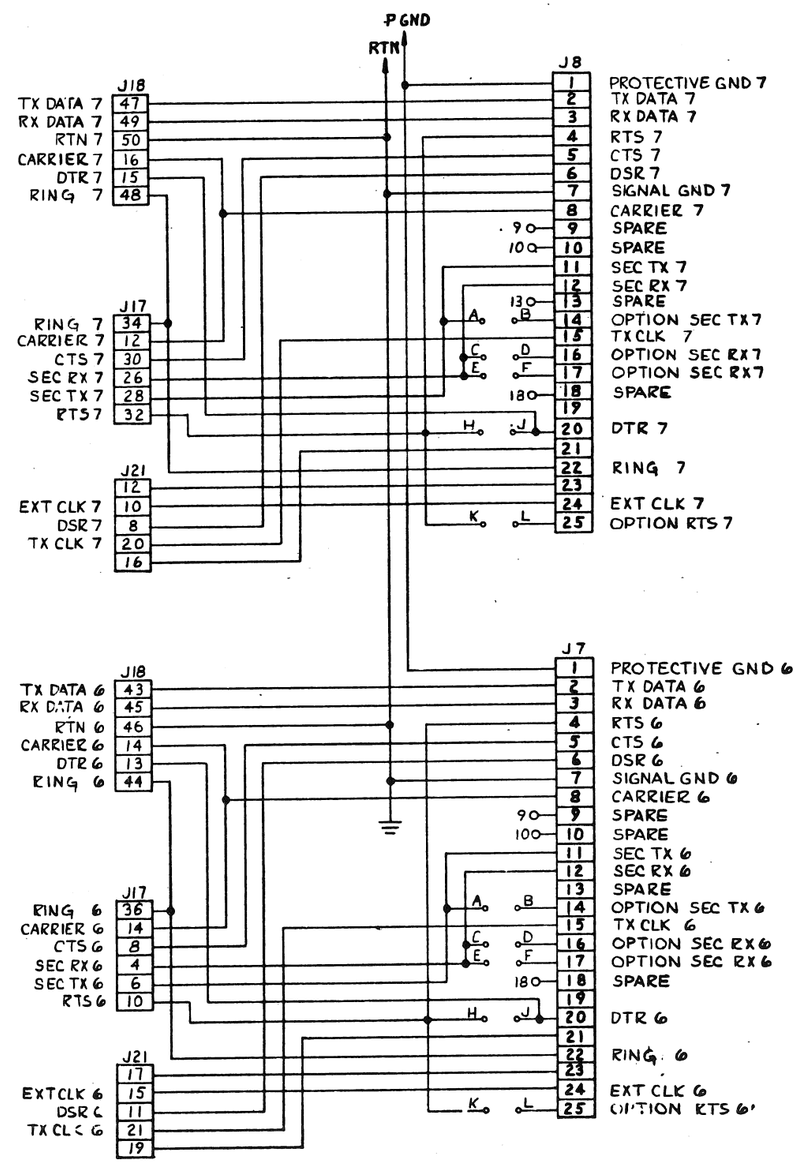

SIZE	CODE IDENT NO.	DWG NO.
D	52648	SD701650
SCALE: —	A	SHEET 3 OF 5
		DISTR NO.

SD701650

REVISIONS				
ZONE	LTR	DESCRIPTION	DATE	APPROVED
		SEE SHEET 1		

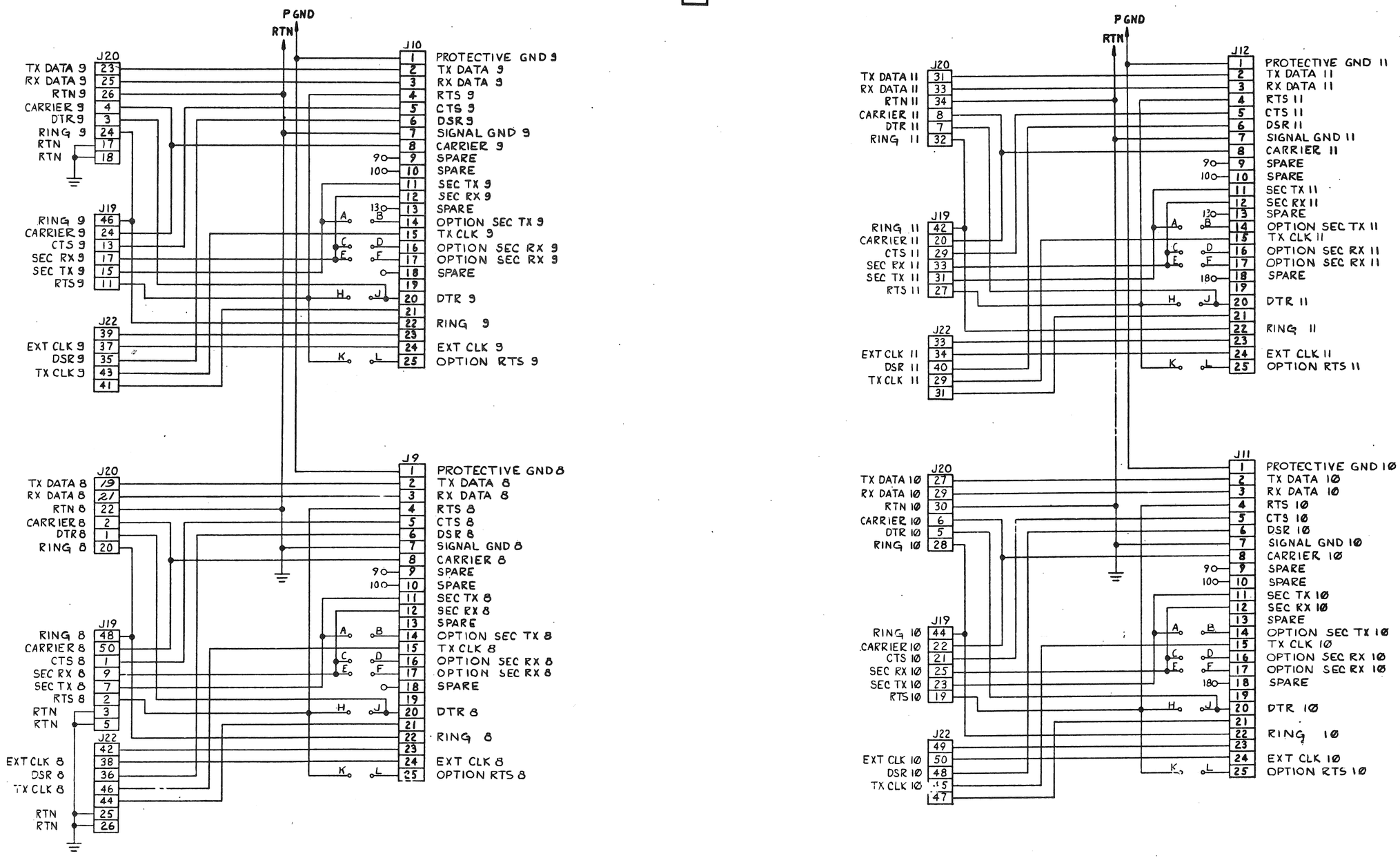

SIZE	CODE IDENT NO.	DWG NO.
D	52648	SD701650
SCALE: —	A	SHEET 4 OF 5
		DISTR NO.

SD701650

REVISIONS				
ZONE	LTR	DESCRIPTION	DATE	APPROVED
		SEE SHEET 1		

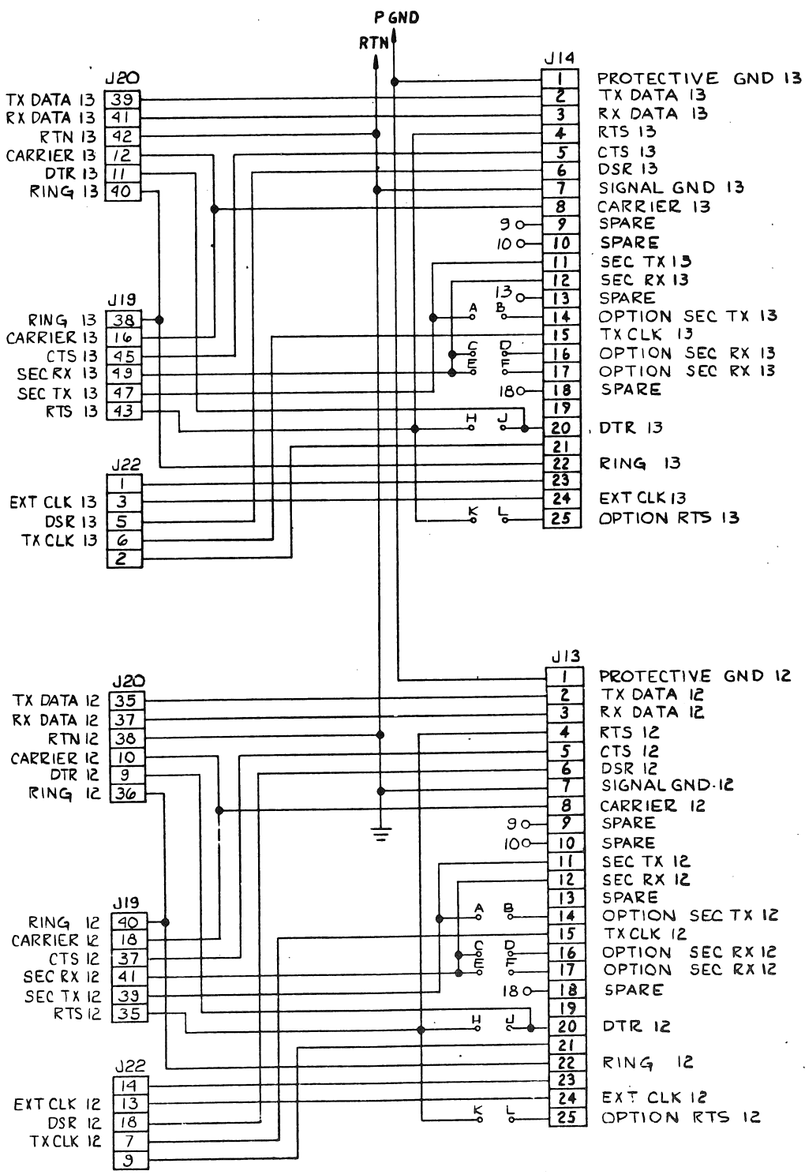

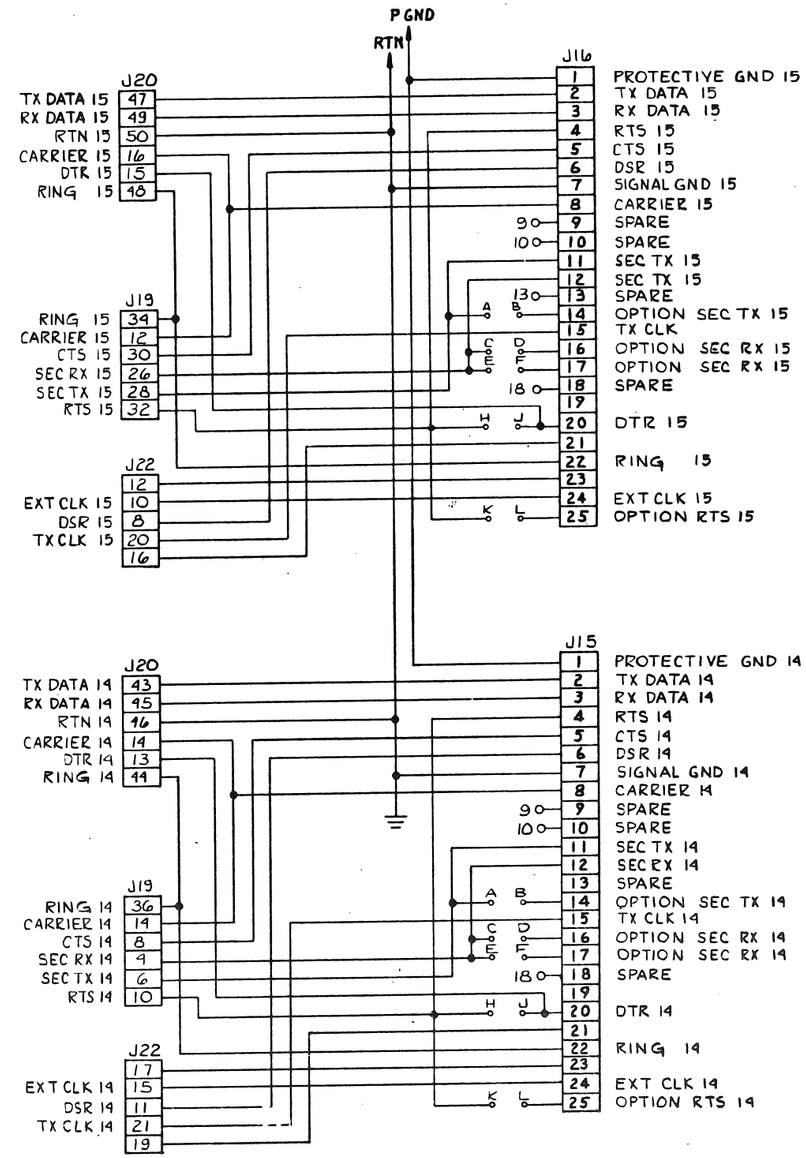

SIZE	CODE IDENT NO.	DWG NO.
D	52648	SD701650
SCALE: NONE		SHEET 5 OF 5
		DISTR NO.

701588

REVISIONS				
ZONE	LTR	DESCRIPTION	DATE	APPROVED
/	A	REL TO PROD PER EO 2616	9-19-78	[illegible]

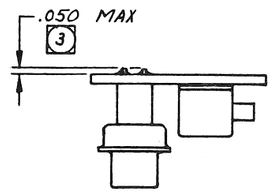

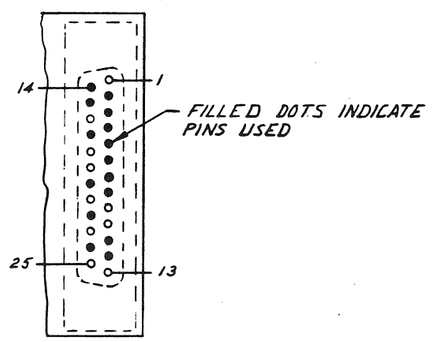

VIEW OF CONNECTOR SOLDER SIDE

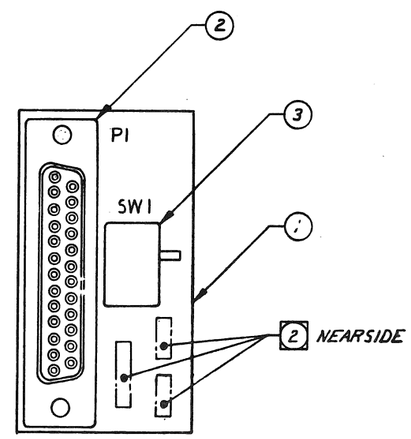

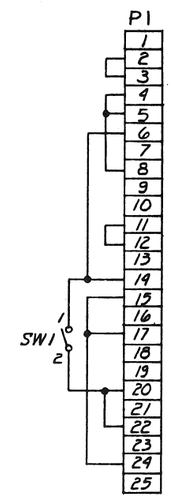

SCHEMATIC

PRODUCTION RELEASE

3 COMPONENT LEAD TRIM AND SOLDER BUILD-UP TO BE AS NOTED.

2 MARK ASSEMBLY VERSION NUMBER. LATEST REVISION LETTER AND SERIAL NUMBER WITH .12 HIGH CHARACTERS USING BLACK INK PER MIL-M-13231, GROUP III. LOCATION APPROX. AS SHOWN.

1. ASSEMBLE AND INSPECT PER WORKMANSHIP STANDARDS MANUAL.

NOTES: UNLESS OTHERWISE SPECIFIED

PART/ASSY NO. & QTY PER ASSY	NOTE	PART OR IDENTIFYING NO.	NOMENCLATURE OR DESCRIPTION / MATERIAL	SPEC/SOURCE	CODE IDENT NO.	FIND NO.
						5
						4
						3
						2
X			FOR PARTS LIST SEE PL701588-100			1
-100						

PARTS LIST

PART/ASSY REV LTR		
A		
-100		PM-H325
PART NO.	NEXT ASSY	USED ON

APPLICATION

DO NOT SCALE DRAWING

SCREW THREADS PER HANDBOOK H-28
COUNTERBORE AND SPOTFACE FILLET RADII TO BE .010 MAXIMUM
REMOVE ALL BURRS AND BREAK SHARP EDGES EQUIVALENT TO .010R
ROUGHNESS OF MACHINED SURFACES 125√ PER USAS B46.1
STANDARD HOLE TOLERANCE PER AND 10387
TOLERANCES ON .XX = ± .03 .XXX = ± .010 ANGLES = ± 0° 30'
INTERPRET DIMENSIONS AND TOLERANCES PER USAS Y14.5
DIMENSIONS ARE IN INCHES AND APPLY AFTER HEAT TREAT AND FINISH
UNLESS OTHERWISE SPECIFIED

CONTRACT NO.		
DRAWN	J. Wimber	4-21-78
CHECK	L. Tunkis	4-24-78
ENGR	R. Toske	4-27-78
PROJ. ENGR		
PROD. DESIGN	[illegible]	5-3-78
OTHER APPROVALS		

Plessey Peripheral Systems

DWG TITLE BOARD ASSEMBLY
TEST CONNECTOR-LOOP BACK
PM-H325

SIZE	CODE IDENT NO.	DWG NO.
D	52648	701588

SCALE: 2/1 SHEET 1 OF 1

R DISTR NO. 123456B

BISHOP GRAPHICS/ACCUPRESS REORDER NO A-1015

701608

REVISIONS				
ZONE	LTR	DESCRIPTION	DATE	APPROVED
	A	REL TO PROD PER EO 2481	8-18-78	
	B	INCORP PER EO 2868	2-6-79	

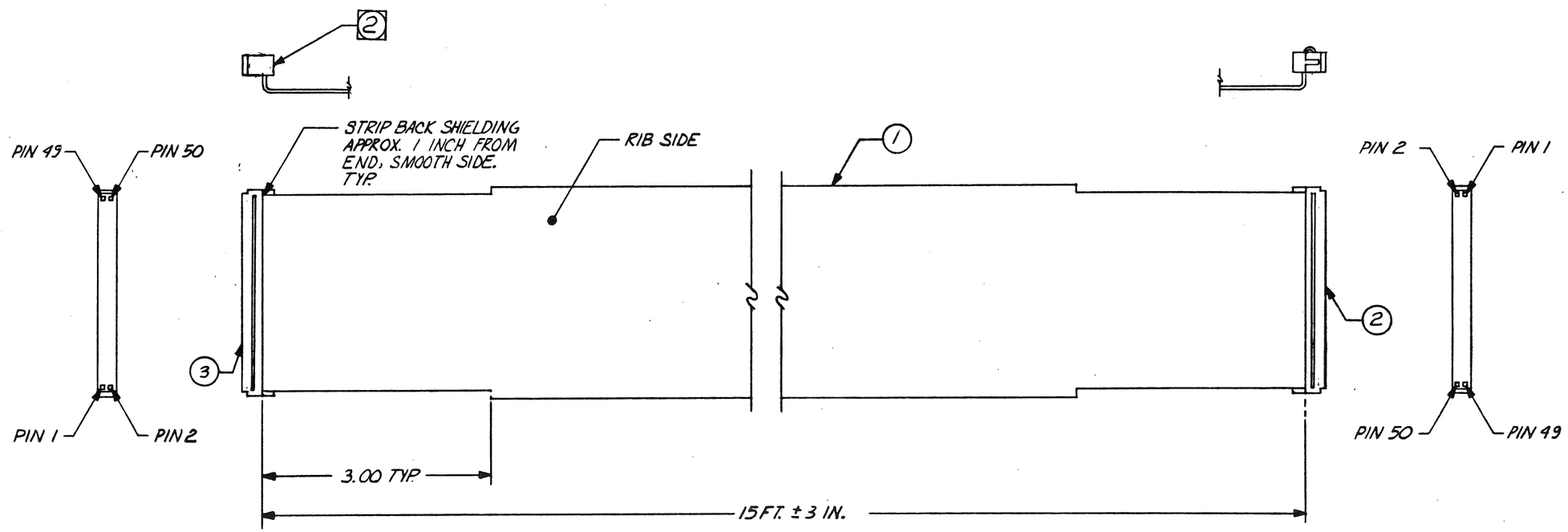

PRODUCTION RELEASE

PART/ASSY NO. & QTY PER ASSY	NOTE	PART OR IDENTIFYING NO.	NOMENCLATURE OR DESCRIPTION / MATERIAL	SPEC/SOURCE	CODE IDENT NO.	FIND NO.
						5
						4
						3
						2
X			FOR PARTS LIST SEE PL 701608-100			1
-100						

PARTS LIST

PART/ASSY REV LTR		
B		
-100		PM-B005W-15
PART NO.	NEXT ASSY	USED ON

APPLICATION

DO NOT SCALE DRAWING

SCREW THREADS PER HANDBOOK H-28
COUNTERBORE AND SPOTFACE FILLET RADII TO BE .010 MAXIMUM
REMOVE ALL BURRS AND BREAK SHARP EDGES EQUIVALENT TO .010R
ROUGHNESS OF MACHINED SURFACES 125 PER USAS B46.1
STANDARD HOLE TOLERANCE PER AND 10387
TOLERANCES ON: .XX = ± .03 .XXX = ± .010 ANGLES = ± 0° 30'
INTERPRET DIMENSIONS AND TOLERANCES PER USAS Y14.5
DIMENSIONS ARE IN INCHES AND APPLY AFTER HEAT TREAT AND FINISH
UNLESS OTHERWISE SPECIFIED

CONTRACT NO.

DRAWN	R.P. HYTTINEN	5-16-78
CHECK	R. Turkie	5-22-78
ENGR	T. Tolbe	5-22-78
PROJ. ENGR		
PROD. DESIGN	D. Turk	5-24-78
		5-23-78
OTHER APPROVALS		

Plessey Peripheral Systems

DWG TITLE
CABLE ASSEMBLY
50 CONDUCTOR, SHIELDED
PM - B005W-15

SIZE	CODE IDENT NO.	DWG NO.
C	52648	701608

SCALE: 1/1 | SHEET 1 OF 1

DISTR NO. 123470 C

2 MARK PART NO. & LATEST REV LETTER WITH .12 HIGH CHARACTERS USING WHITE INK PER MIL-M-13231, GROUP III. LOCATE APPROX. WHERE SHOWN.

1. ASSEMBLE AND INSPECT PER WORKMANSHIP STANDARDS MANUAL.

NOTES: UNLESS OTHERWISE SPECIFIED

701694

REVISIONS				
ZONE	LTR	DESCRIPTION	DATE	APPROVED
	A	REL TO PROD PER EO5376	11-30-78	
	B	INCORP PER EO 2868	2-6-79	

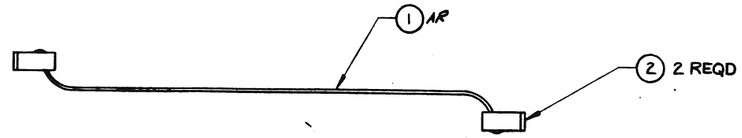

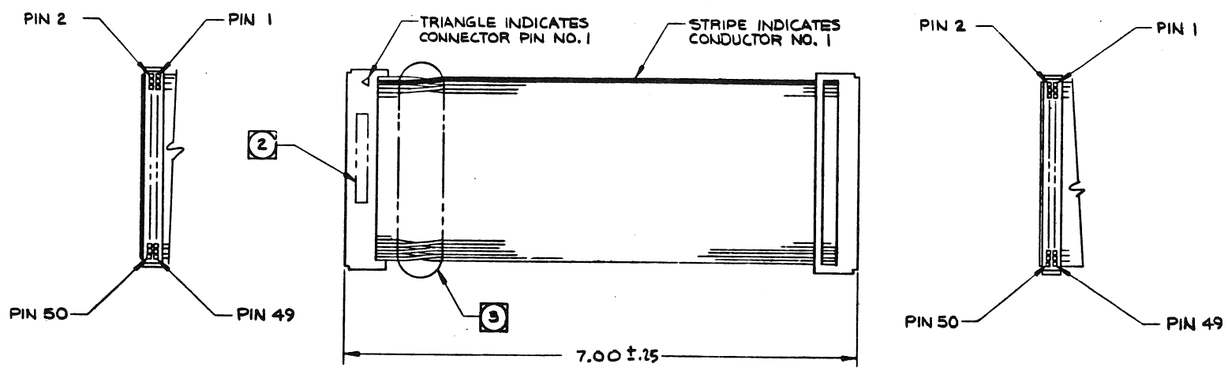

PRODUCTION RELEASE

PART/ASSY NO. & QTY PER ASSY	NOTE	PART OR IDENTIFYING NO.	NOMENCLATURE OR DESCRIPTION / MATERIAL	SPEC/SOURCE	CODE IDENT NO.	FIND NO.
						5
						4
						3
						2
X			FOR PARTS LIST SEE PL701694-100			1
-100						

PARTS LIST

PART/ASSY REV LTR		
B		
-100	701885-100	PM-DZ11
PART NO.	NEXT ASSY	USED ON

APPLICATION

DO NOT SCALE DRAWING

SCREW THREADS PER HANDBOOK H-29

COUNTERBORE AND SPOTFACE FILLET RADII TO BE .010 MAXIMUM

REMOVE ALL BURRS AND BREAK SHARP EDGES EQUIVALENT TO .010R

ROUGHNESS OF MACHINED SURFACES 125√ PER USAS B46.1

STANDARD HOLE TOLERANCE PER AND 10387

TOLERANCES ON: .XX = ± .03 .XXX = ± .010 ANGLES = ± 0° 30'

INTERPRET DIMENSIONS AND TOLERANCES PER USAS Y14.5

DIMENSIONS ARE IN INCHES AND APPLY AFTER HEAT TREAT AND FINISH

UNLESS OTHERWISE SPECIFIED

CONTRACT NO.

DRAWN		27 OCT 78
CHECK		11-30-78
ENGR		12-1-78
PROJ. ENGR		
PROD. DESIGN		12-4-78
		12-5-78
OTHER APPROVALS		

Plessey Peripheral Systems

DWG TITLE
CABLE ASSEMBLY, FLAT, MIRROR IMAGE, BCØ6-ØJ
PM-DZ11

SIZE	CODE IDENT NO.	DWG NO.
D	52648	701694

SCALE: 1/1 SHEET 1 OF 1

DISTR NO. 123470 C

3. SEPARATE EACH WIRE AND TWIST INTO PAIRS. TWISTED WIRE SECTION TO BE LOCATED APPROXIMATELY AS SHOWN.

2. MARK PART NUMBER, VERSION NUMBER, AND LATEST REVISION LETTER WITH .12 HIGH CHARACTERS, USING BLACK INK PER MIL-M-13231, GROUP III. LOCATE APPROXIMATELY WHERE SHOWN.

1. ASSEMBLE AND INSPECT PER WORKMANSHIP STANDARDS MANUAL.

NOTES: UNLESS OTHERWISE SPECIFIED

DWG NO 701694 REV B

SK701792

REVISIONS				
ZONE	LTR	DESCRIPTION	DATE	APPROVED
/	X1	REL TO DEV EO 5073	5-16-78	[illegible]
/	X2	INCORP EO 2531	8-17-78	[illegible]
/	X2	INCORP EO 2836	1-19-79	[illegible]

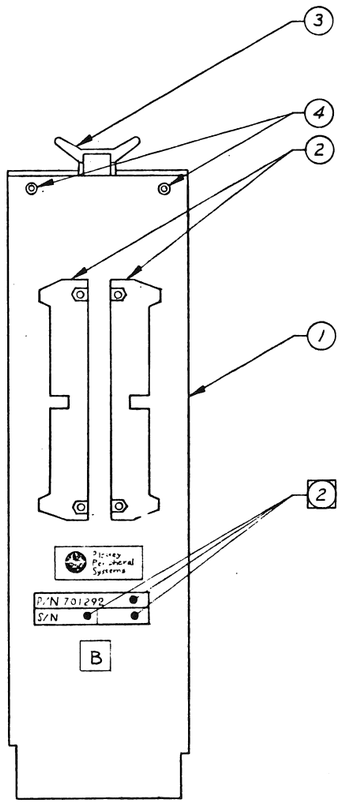

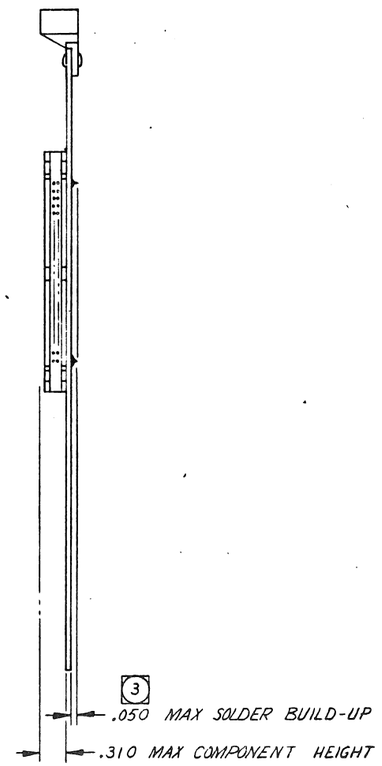

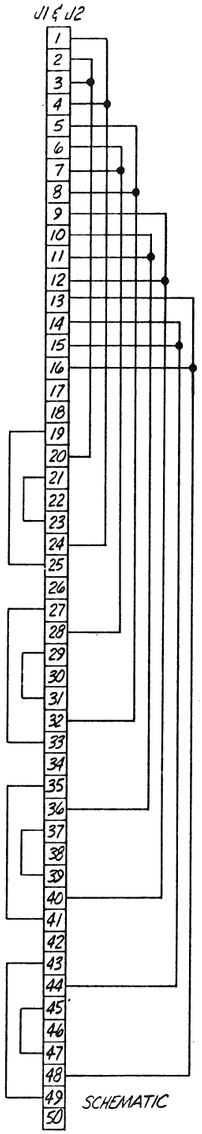

ENGINEERING RELEASE
COGNIZANT ENGINEER [illegible]
NOT FOR FABRICATION UNLESS SIGNED BELOW
[illegible] DATE 5-18-78

3 COMPONENT LEAD TRIM AND SOLDER BUILD-UP TO BE AS NOTED.

2 MARK ASSEMBLY VERSION NUMBER, LATEST REVISION LETTER AND SERIAL NUMBER WITH .12 HIGH CHARACTERS USING BLACK INK PER MIL-M-13231, GROUP III. LOCATION APPROX. AS SHOWN.

1. ASSEMBLE AND INSPECT PER WORKMANSHIP STANDARDS MANUAL.

NOTES: UNLESS OTHERWISE SPECIFIED

											5
											4
											3
											2
					X			FOR PARTS LIST SEE SKPL701792-100			1
					-100	NOTE	PART OR IDENTIFYING NO.	NOMENCLATURE OR DESCRIPTION / MATERIAL	SPEC/SOURCE	CODE IDENT NO.	FIND NO.
PART/ASSY NO. & QTY PER ASSY								PARTS LIST			

PART/ASSY REV LTR			
			X2
-100	FINAL	PM-H3721	
PART NO.	NEXT ASSY	USED ON	
APPLICATION			

DO NOT SCALE DRAWING
SCREW THREADS PER HANDBOOK H-28
COUNTERBORE AND SPOTFACE FILLET RADII TO BE .010 MAXIMUM
REMOVE ALL BURRS AND BREAK SHARP EDGES EQUIVALENT TO .010R
ROUGHNESS OF MACHINED SURFACES 125√ PER USAS B46.1
STANDARD HOLE TOLERANCE PER AND 10387
TOLERANCES ON: .XX = ± .03 .XXX = ± .010 ANGLES = ± 0° 30'
INTERPRET DIMENSIONS AND TOLERANCES PER USAS Y14.5
DIMENSIONS ARE IN INCHES AND APPLY AFTER HEAT TREAT AND FINISH
UNLESS OTHERWISE SPECIFIED

CONTRACT NO.		
DRAWN	[illegible]	5-11-75
CHECK	[illegible]	5-18-78
ENGR	[illegible]	5-18-78
PROJ. ENGR		
PROD. DESIGN	[illegible]	5-22-78
	[illegible]	5-23-78
OTHER APPROVALS		

Plessey Peripheral Systems

DWG TITLE BOARD ASSEMBLY
TEST CONNECTOR, STAGGERED TURNAROUND
PM-H3721

SIZE	CODE IDENT NO.	DWG NO.
D	52648	SK701792

SCALE: N/A SHEET 1 OF 1

DISTR NO. 123470 B

REV X2

SK701792

701663

REVISIONS				
ZONE	LTR	DESCRIPTION	DATE	APPROVED
/	A	REL TO PROD. PER EO 5244	8-21-78	
/	A	INCORP PER EO 2988	4-20-79	
/	B	INCORP EO 3025 Z.U.	4-24-79	

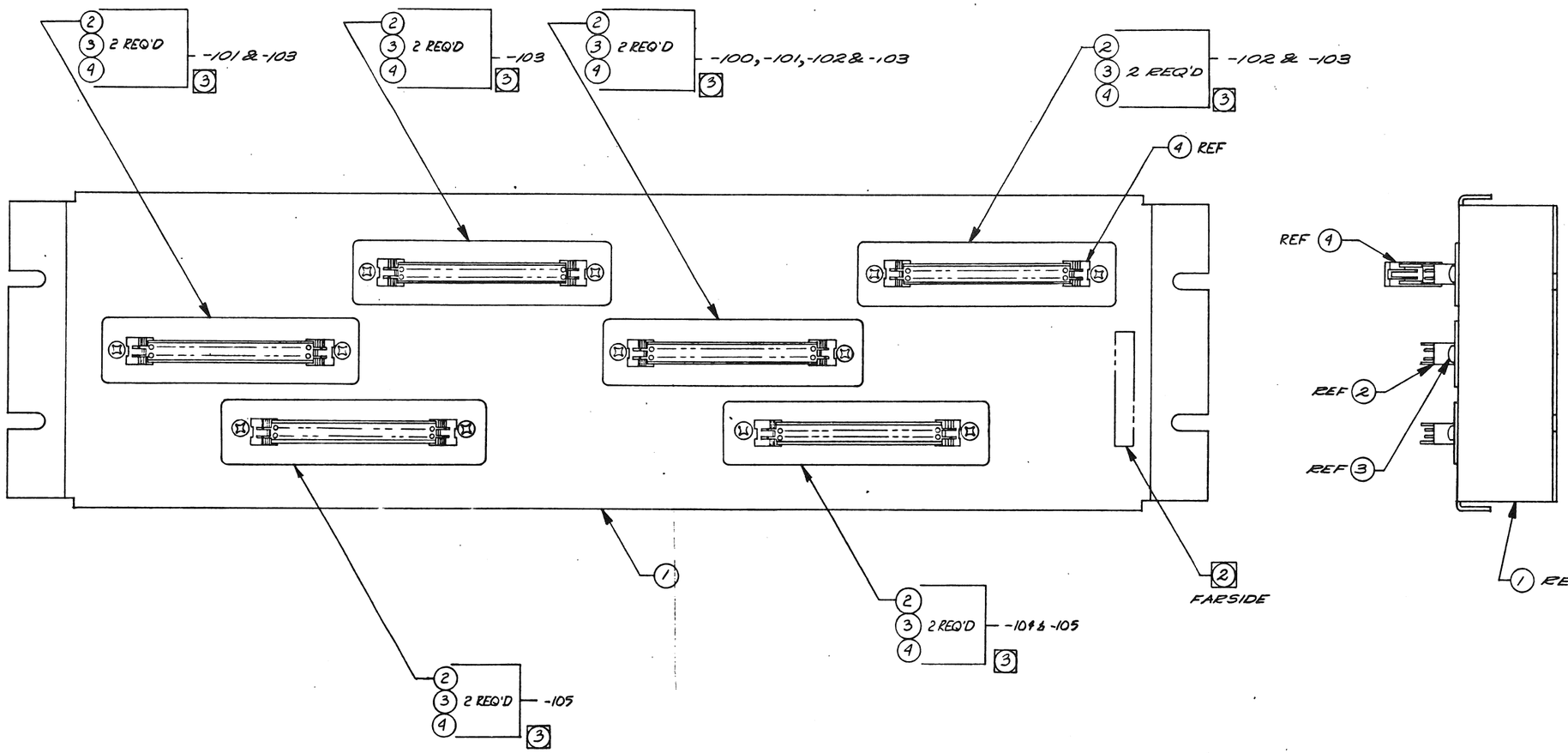

PRODUCTION RELEASE

-105	-104	-103	-102	-101	-100	NOTE	PART OR IDENTIFYING NO.	NOMENCLATURE OR DESCRIPTION / MATERIAL	SPEC/SOURCE	CODE IDENT NO.	FIND NO.
X								FOR PARTS LISTS SEE PL701663-105			6
	X							FOR PARTS LISTS SEE PL701663-104			5
		X						FOR PARTS LIST SEE PL701663-103			4
			X					FOR PARTS LIST SEE PL701663-102			3
				X				FOR PARTS LIST SEE PL701663-101			2
					X			FOR PARTS LIST SEE PL701663-100			1

PART/ASSY NO. & QTY PER ASSY — PARTS LIST

B	B	B	B	B	B
PART/ASSY REV LTR					

PART NO.	NEXT ASSY	USED ON
-105	—	FM-DZ11/A
-104	—	FM-DZ11/A
-103	—	FM-DZ11/A
-102	—	FM-DZ11/A
-101	701885-102	FM-DZ11/A
-100	701885-100	FM-DZ11/A

APPLICATION

DO NOT SCALE DRAWING

SCREW THREADS PER HANDBOOK H-28
COUNTERBORE AND SPOTFACE FILLET RADII TO BE .010 MAXIMUM
REMOVE ALL BURRS AND BREAK SHARP EDGES EQUIVALENT TO .010R
ROUGHNESS OF MACHINED SURFACES 125√ PER USAS B46.1
STANDARD HOLE TOLERANCE PER AND 10387
TOLERANCES ON: .XX = ± .03 .XXX = ± .010 ANGLES = ± 0° 30'
INTERPRET DIMENSIONS AND TOLERANCES PER USAS Y14.5
DIMENSIONS ARE IN INCHES AND APPLY AFTER HEAT TREAT AND FINISH
UNLESS OTHERWISE SPECIFIED

CONTRACT NO.

DRAWN	TOM CONEY	8-17-78
CHECK		8-21-78
ENGR		8-21-78
PROJ. ENGR		
PROD. DESIGN		8-21-78
OTHER APPROVALS		

Plessey Peripheral Systems

DWG TITLE: BRACKET ASSEMBLY, CONNECTOR FILTER FM-DZ11A

SIZE	CODE IDENT NO.	DWG NO.
D	52648	701663

SCALE: 1/1 — SHEET 1 OF 1

DISTR NO. 123490 D

(3) F/N 4 MUST BE INSTALLED AFTER F/N 2 HAS BEEN MOUNTED ON BRACKET.

(2) MARK ASSEMBLY NUMBER, VERSION NUMBER AND LATEST REVISION LETTER WITH .12 HIGH CHARACTERS USING BLACK INK PER MIL-M-19231 GROUP III. LOCATION APPROXIMATELY AS SHOWN.

1. ASSEMBLE AND INSPECT PER WORKMANSHIP STANDARDS MANUAL.

NOTES: UNLESS OTHERWISE SPECIFIED

BISHOP GRAPHICS, ACCUPRESS REORDER NO. A 1015