MODEL33 RO, KSR, ASR SETS (3300, 3310, 3320 SERIES)

WDP0316

DRAWING NO.	SHEET NO.	DESCRIPTION	ISSUE NUMBER 1	2	3	4	5	6	7	8	9	10	11	12	13	14	15	16	17	18	19	20	21	22	23	24	25	26	27	28	29	30
		SCHEMATICS																														
1180SD	ALL	3300, 3310, 3320 SERIES SETS	1	1	2	2	3	4	5	5	5	5	6																			
9334WD	1	KEYBOARD	1	1	1	1	2	2	2	2	2	2	2																			
		ACTUALS																														
9335WD	1	WIRING DIAGRAM FOR TYPING UNIT	1	2	2	2	2	3	4	4	4	4	4																			
4405WD	ALL	WIRING DIAGRAM FOR MOTORS	6	6	6	7	7	7	7	7	7	7	7																			
9336WD	ALL	WIRING DIAGRAM FOR CALL CONTROL UNIT UCC6	—	1	1	1	1	1	1	1	1	1	2																			
4970WD	1	WIRING DIAGRAM FOR SELECTOR MAGNET DRIVER	6	6	6	6	6	6	6	6	6	6	6																			
-	-	WIRING DIAGRAM FOR KEYBOARD REFER TO 9334WD ABOVE	—	—	—	—	—	—	—	—	—	—																				
7887WD	1	WIRING DIAGRAM FOR READER	3	3	3	3	4	4	4	4	4	4	4																			
		CIRCUIT CARDS																														
181821		SELECTOR MAGNET DRIVER	10	10	10	10	10	10	10	10	12	12	12																			
183079		AUTOMATIC READER POWER PACK	9A	9A	10	10	11	12	13	13	13	13	13																			
183087		MANUAL READER POWER PACK	11	11	11	11	11	11	11	12	12	13	13																			

TELETYPE CORPORATION

21643R NOTE : THE LAST COMPLETED COLUMN INDICATES THE LATEST ISSUE NUMBER OF WDP.

SHEET 1 OF 1

R & D FORM 361 (6-66)

SHEET INDEX

CONTENTS	SHEET NO.	ISSUE NO. 1	2	3	4	5	6	7	8	9	10	11	12	13	14	15	16	17	18	19	20	21	22	23	24	25	SHEET NO.
SHEET INDEX SUPPORTING INFORMATION	A1	1	2	3	4	5	6																				A1
FS-1 RECEIVE	B1	1	1	1	1	1	1																				B1
FS-2 SEND	B2	1	1	1	1	2	2																				B2
FS-3 LOCAL LOOP CURRENT SUPPLY	B3	1	1	1	1	1	1																				B3
FS-4 MODE CONTROL	B4	1	1	1	1	1	1																				B4
FS-5 AUXILIARY CIRCUITS	B5	1	1	1	2	2	2																				B5
FS-6 READER CONTROL	B6	1	1	1	1	1	1																				B6
FS-7 AUTOMATIC READER LOGIC	B7	1	1	2	2	2	2																				B7
FS-8 READER FEED	B8	1	1	1	1	1	1																				B8
FS-9 115V AC POWER DISTRIBUTION	B9	1	1	1	1	1	2																				B9
FS-10 MOTOR	B10	1	1	1	1	1	1																				B10
FS-11 48V AC POWER DISTRIBUTION	B11	1	2	2	2	2	2																				B11
APPARATUS FIGURES	C1	1	1	1	1	1	1																				C1
NOTES	D1	1	1	1	1	1	1																				D1
BD-1 CIRCUIT BLOCK DIAGRAM	H1	1	1	1	1	1	1																				H1
BD-2 SIGNAL AND AUXILIARY	H2	1	1	1	1	1	1																				H2
BD-3 READER CONTROL	H3	1	1	1	1	1	1																				H3
BD-4 AC POWER	H4	1	1	1	1	1	1																				H4

SUPPORTING INFORMATION

CATEGORY	NO.
WIRING DIAGRAM PACKAGE FOR MODEL 33 RO, KSR, AND ASR SETS 3300. 3310, 3320 SERIES.	WDP 0316

SHEET INDEX NOTES

1. WHEN CHANGES ARE MADE IN THIS DRAWING ONLY THOSE SHEETS AFFECTED WILL BE REISSUED.
2. THIS SHEET INDEX WILL BE REISSUED AND UPDATED EACH TIME ANY SHEET OF THE DRAWING IS REISSUED OR A NEW SHEET IS ADDED.
3. THE LAST COMPLETED COLUMN INDICATES THE LATEST ISSUE NUMBER OF THE SHEET INDEX.
4. SHEETS THAT ARE NOT CHANGED WILL RETAIN THEIR EXISTING ISSUE NO.
5. ISSUE DATES WILL BE SHOWN ON THE SHEET INDEX ONLY.

REVISIONS

ISSUE	DATE	AUTH. NO.
1	7-7-71	21643R
2	11-10-71	4637-RC
3	1-11-72	4350
4	1-17-72	4455
5	1-17-72	4897-RC
6	5-23-73	8197

WDP

MODEL 33

RO, KSR, AND ASR SETS

3300, 3310, 3320 SERIES

APPROVALS

PROJ. SUPV.	PROJ. DIR.	MFG. REL. COMPL.
DFR	RRS	

ENGR DFR DSGNR.

DRN. SLD DATE 5-14-71

R & D FILE 6-A152.219A

S-NUMBER 61,910

TELETYPE

1180SD-A1

TC 639 (3-69)

FS-1
RECEIVE

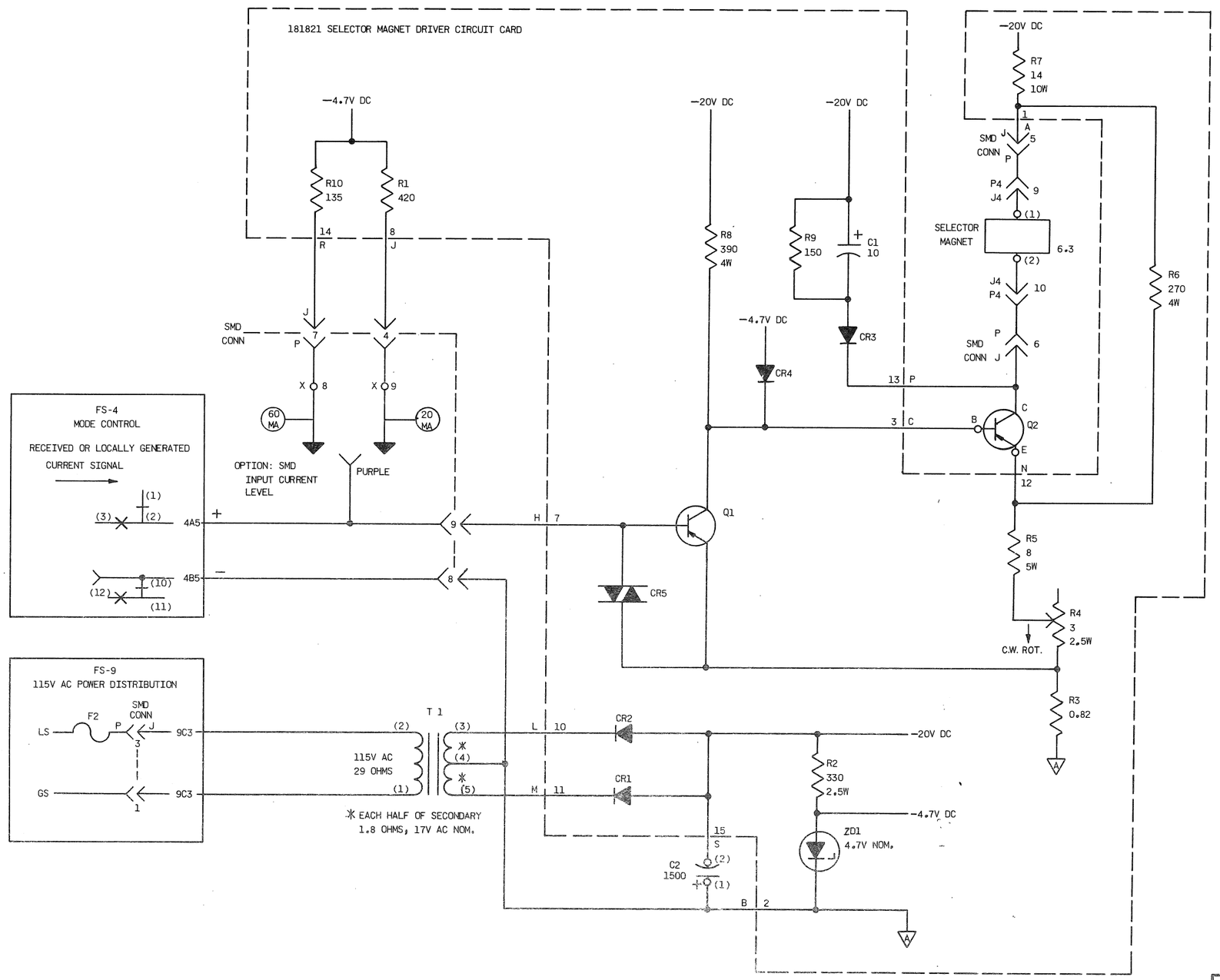

MODEL 33 RO, KSR, AND ASR SETS 3300, 3310, 3320 SERIES	TELETYPE 1180 SD-B1

TC 640 (2-69)

FS-2
SEND CIRCUIT

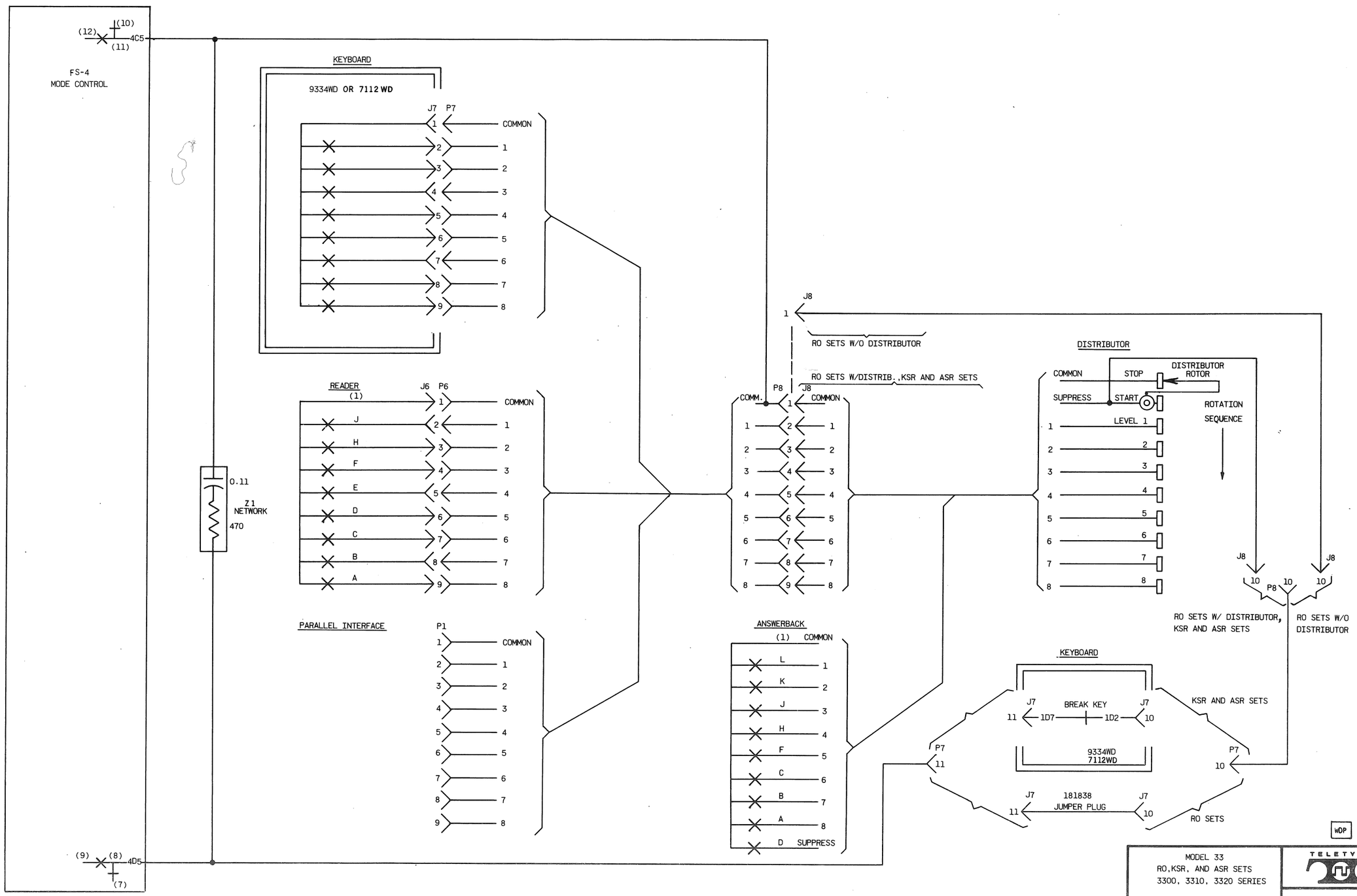

ISSUE
1
2

MODEL 33
RO,KSR, AND ASR SETS
3300, 3310, 3320 SERIES

TELETYPE

1180 SD-B2

TC 640 (3-69)

FS-3

LOCAL LOOP CURRENT SUPPLY

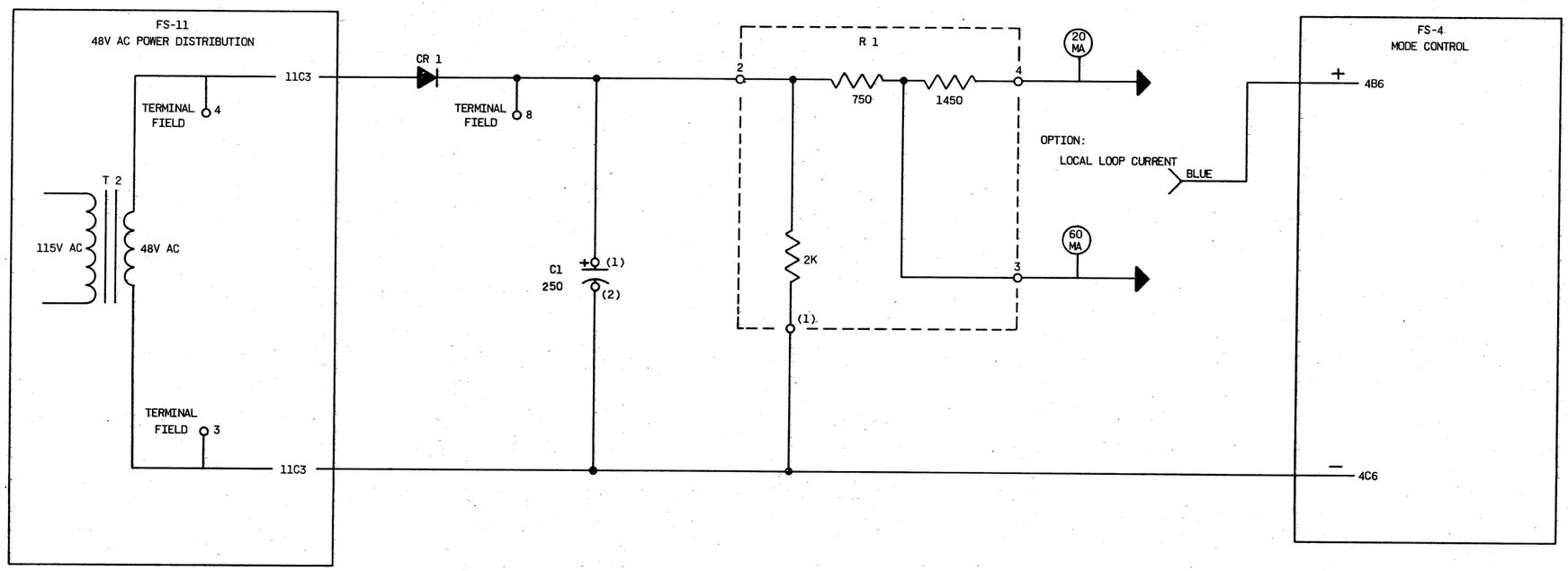

ISSUE 1

MODEL 33
RO, KSR, AND ASR SETS
3300, 3310, 3320 SERIES

TELETYPE

1180 SD-B3

WDP

TC 640 (3-69)

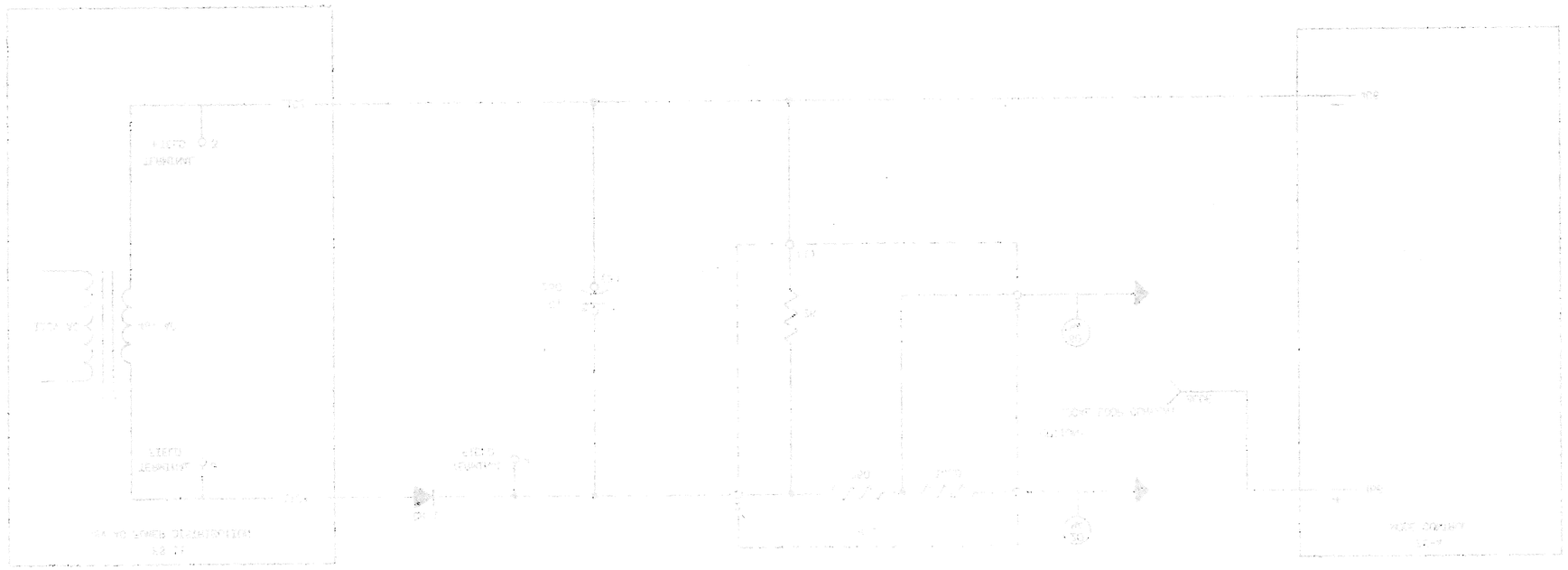

SHEET NOTES

1. ALL RELAY CONTACTS ON THIS SHEET ARE PART OF THE MODE CONTROL RELAY. COIL IS SHOWN ON 9C3.

ISSUE 1

FS-4
MODE CONTROL

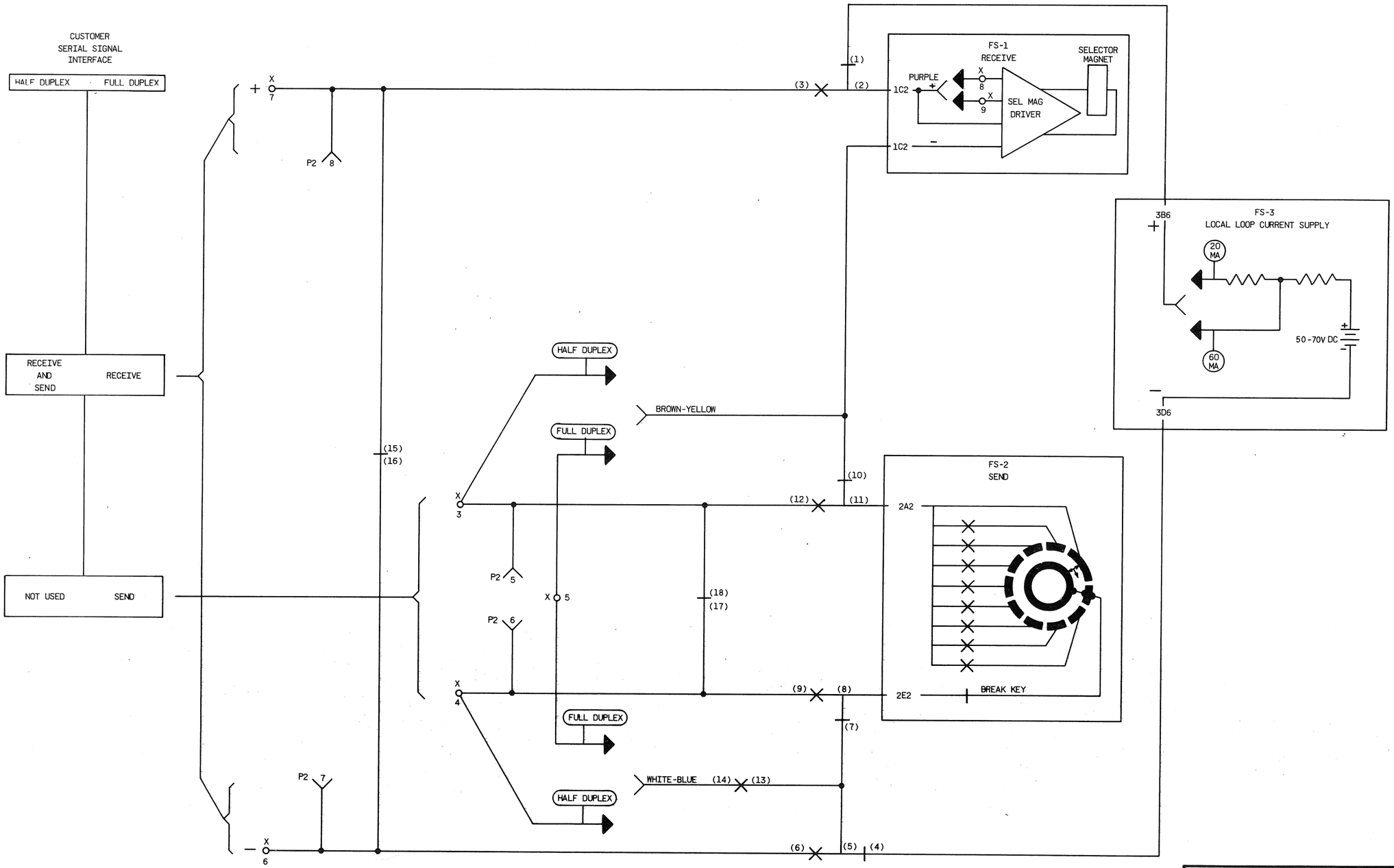

MODEL 33
RO, KSR, AND ASR SETS
3300, 3310, 3320 SERIES

TELETYPE

1180 SD-B4

TC 640 (3-69)

ISSUE
1
2

FS-5

AUXILIARY CIRCUITS
(FOR CUSTOMER USE)

PAPER ALARM

PAPER FEED	TITLE	CONDITION SIGNALLED	TYPE
FRICTION:	LOW PAPER SWITCH	APPROX. 25 FT. OF PAPER LEFT	SNAP ACTION SWITCH
SPROCKET:	PAPER OUT CONTACT	END OF LAST FORM	CONTACT PILE

	LOCATION	CONTACT RATING
FRICTION:	IN FRONT OF MOTOR FAN	
SPROCKET:	NEAR LEFT END OF PLATEN	

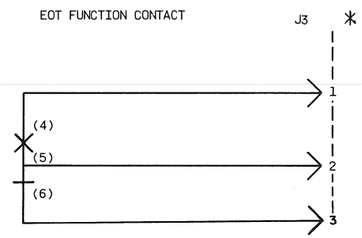

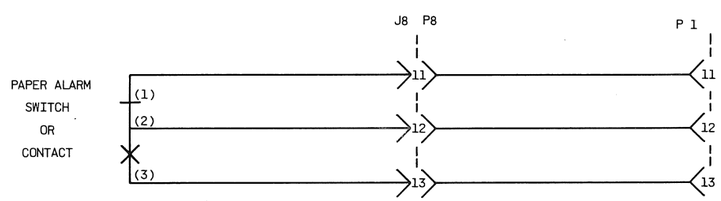

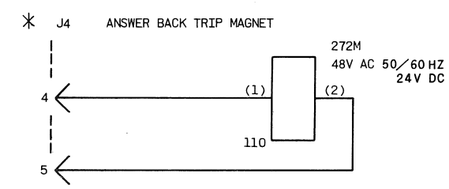

* CUSTOMER ACCESS TO THE PINS SHOWN IS TO BE MADE FROM INSIDE THE CALL CONTROL UNIT BACK PLATE, USING 182644 (22-28 AWG) OR 185677 (18-20 AWG) FEMALE TERMINALS.

MODEL 33
RO, KSR, AND ASR SETS
3300, 3310, 3320 SERIES

TELETYPE

1180 SD-B5

TC 640 (3-69)

FS-6

READER CONTROL
(ASR SETS ONLY)

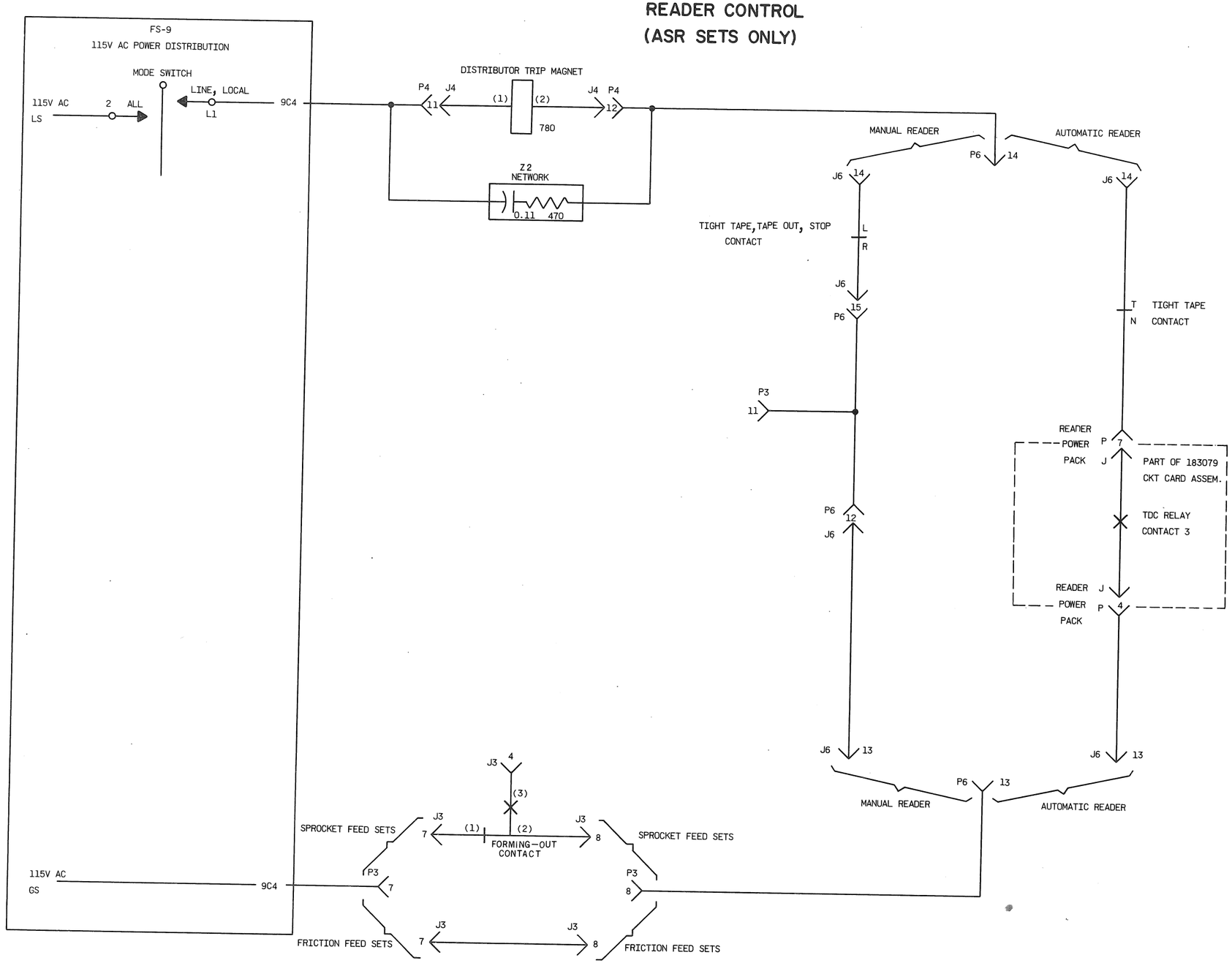

ISSUE 1

MODEL 33
RO, KSR, AND ASR SETS
3300, 3310, 3320 SERIES

TELETYPE

1180 SD-B6

TC 640 (3-69)

FS-7

AUTOMATIC READER LOGIC
(ASR SETS W/AUTOMATIC READER ONLY)

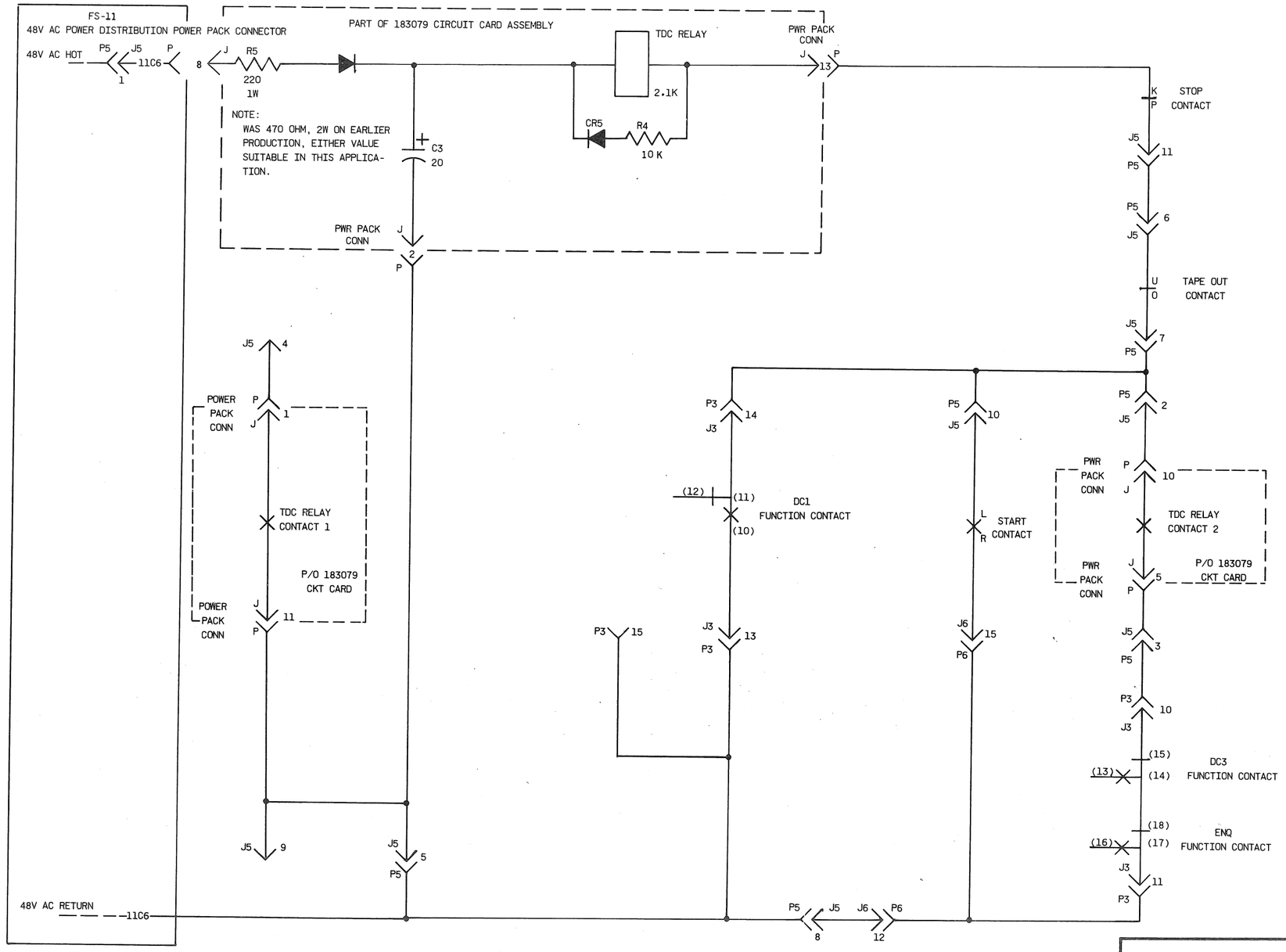

ISSUE
1
2

MODEL 33
RO, KSR, ASR SETS
3300, 3310, 3320 SERIES

TELETYPE

1180 SD-B7

TC 640 (3-69)

FS-8

READER FEED

(ASR SETS ONLY)

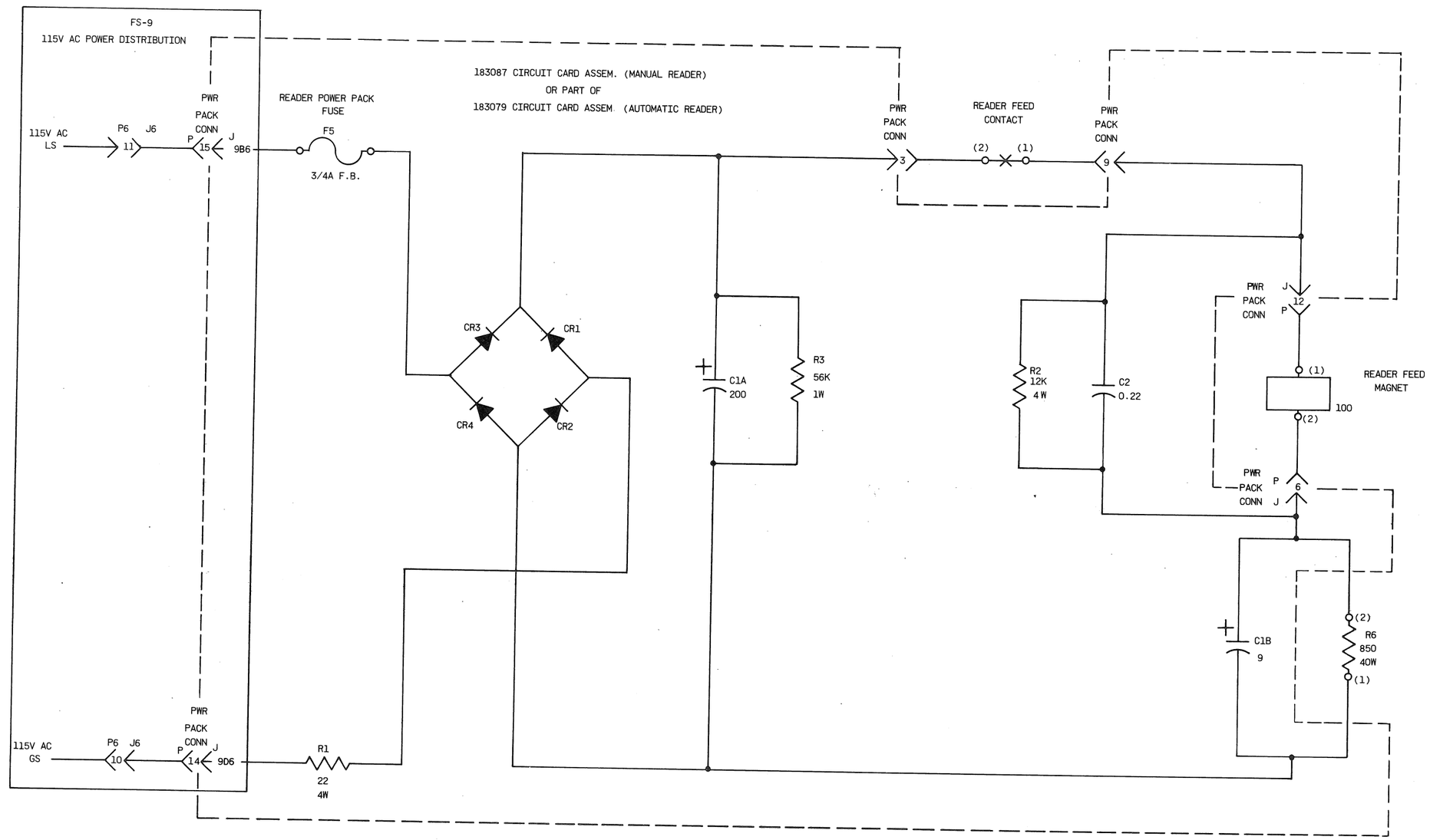

ISSUE
1

MODEL 33
RO, KSR, ASR SETS
3300, 3310, 3320 SERIES

TELETYPE

1180 SD-B8

TC 640 (3-69)

FS-9

115VAC POWER DISTRIBUTION

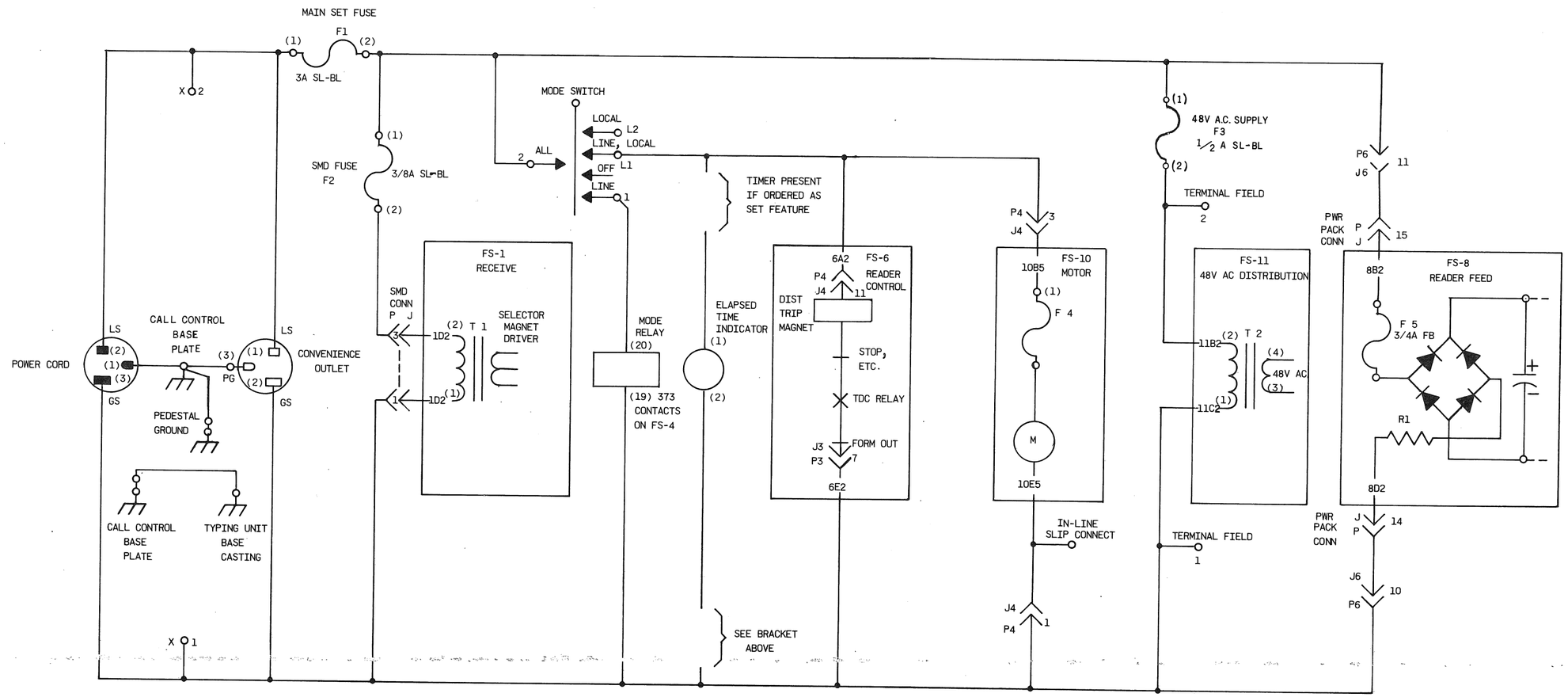

ISSUE
1
✓ 2

MODEL 33
RO, KSR, AND ASR SETS
3300, 3310, 3320 SERIES

TELETYPE

1180 SD-B9

640 (3-69)

FS-10
MOTORS

SYNCHRONOUS MOTORS				
MOTOR PART NUMBER	FREQ. HZ	FUSE F 4	MHP	CAPACITOR
181870	60	2 1/4A SL-BL	33	88-108 MFD
182241	60	2A SL-BL	33	———
182267	50	$1\frac{8}{10}$A.SL-BL	35	———
SERIES GOVERNED MOTOR				
183991	50-60	———	83	———

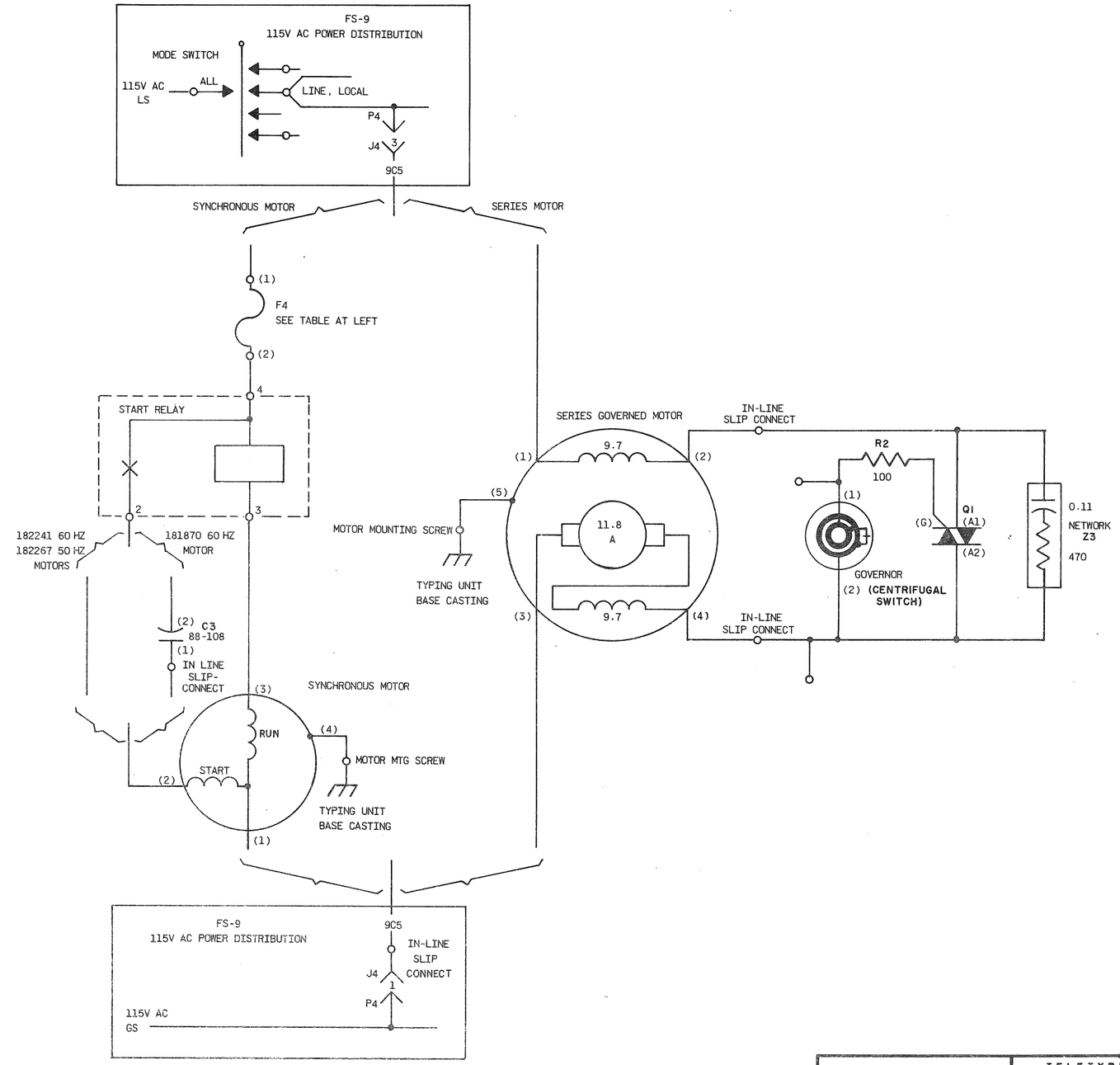

ISSUE 1

MODEL 33
RO, KSR, AND ASR SETS
3300, 3310, 3320 SERIES

TELETYPE

1180 SD-B10

TC 640 (3-69)

FS-11

48VAC POWER DISTRIBUTION

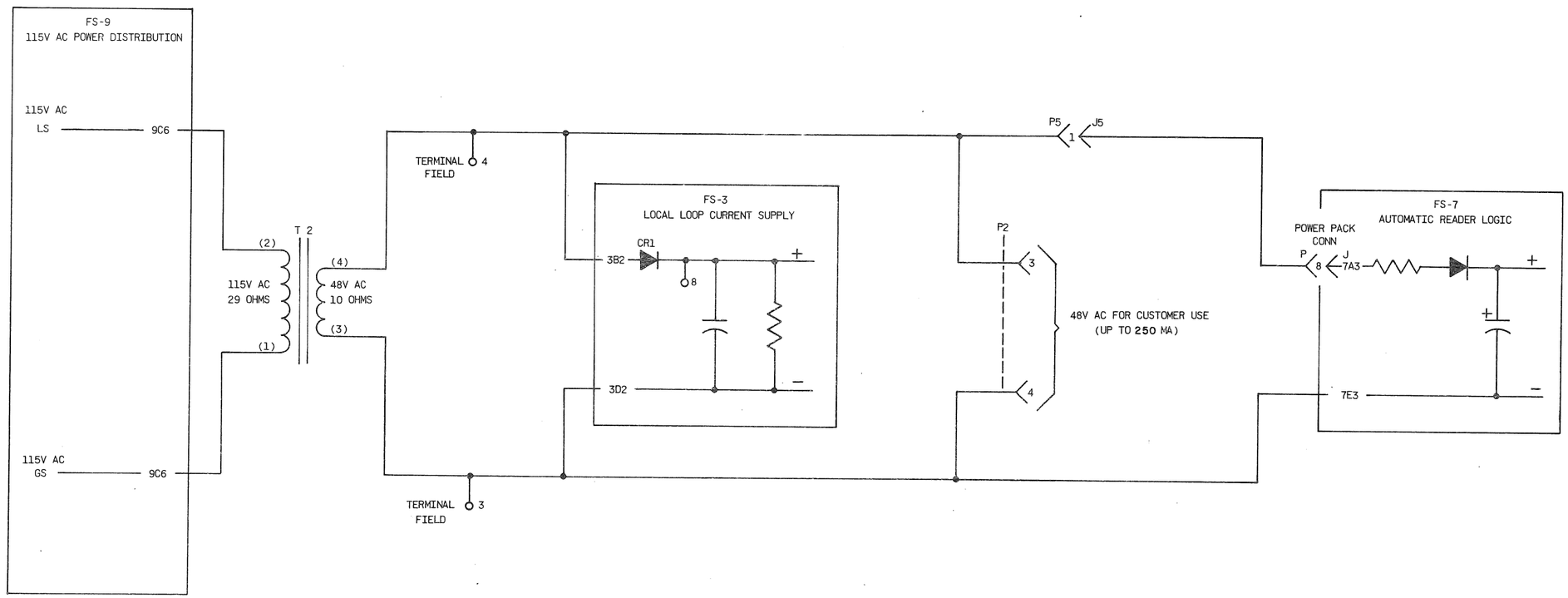

ISSUE
1
2

MODEL 33
RO, KSR, AND ASR SETS
3300, 3310, 3320 SERIES

TELETYPE

1180 SD-B11

TC 640 (3-69)

ISSUE 1

APPARATUS FIGURES

CAPACITORS (NOT ON CKT CARD ASSEM.)

C1 (LOCAL LOOP SUPPLY)	3C3
C2 (SELECTOR MAG. DRIVER)	1E4
C3 (MOTOR START)	10D4

CIRCUIT CARD ASSEMBLIES

AUTOMATIC READER 183079

READER FEED SUPPLY	SHEET 8
RDR LOGIC	7B4
MANUAL READER 183087	SHEET 8

SELECTOR MAGNET DRIVER CARD 181821		CARD SOCKET 181819
TERM	FS/LOC	TERM
1	1B6	A
2	1E5	B
3	1C5	C
4	-	D
5	-	E
6	-	F
7	1C4	H
8	1B3	J
9	-	K
10	1D4	L
11	1D4	M
12	1C6	N
13	1C5	P
14	1B3	R
15	1E4	S

SMD CONN

J = FRAME SIDE, P = CABLE SIDE

TERM	FS/LOC
1	9C3
2	-
3	9C3
4	1B3
5	1B6
6	1B6
7	1B3
8	1C3
9	1C3

CONNECTORS NUMBERED

CONNECTOR SHELL DESIGNATION J = CABLE SIDE P = FRAME SIDE

J AND P	1	2	3	4	5	6	7	8
TERMINAL	FS/LOCATION							
1	2D3	-	5B6	9D5	11B5	2C3	2B3	2C5
2	2D3	-	5B6	-	7C6	2C3	2B3	2C5
3	2D3	11C5	-	9B5	7D6	2C3	2B3	2C5
4	2D3	11C5	-	5C5	7C3	2C3	2B3	2C5
5	2E3	4D3	-	5D5	7E4	2C3	2B3	2C5
6	2E3	4D3	6D3	-	7B6	2D3	2B3	2C5
7	2E3	4E3	6E3	-	7C6	2D3	2B3	2D5
8	2E3	4B3	6E4	-	7E5	2D3	2B3	2D5
9	2E2	-	-	1B6	7E3	2D3	2B3	2D5
10	-	-	7D6	1B6	7C6	9D6	2E6	2D7
11	5C4	-	6C4 7E6	6A3	7B6	9B6	2E6	5C3
12	5C4	-	-	6A4	-	6C5 7E5	-	5C3
13	5D4	-	7D5	-	-	6D5	-	5D3
14	-	-	7C5	-	-	6B5	-	-
15	-	-	7D4	-	-	6B5 7D6	-	-

CONNECTORS, TITLED

READER POWER PACK CONN.

J - CARD SIDE
P - CABLE SIDE

TERM.	FS/LOC MAN. AND AUTO.	FS/LOC AUTO. ONLY
1		7C3
2		7B4
3	8B4	
4		6D6
5		7D6
6	8C6	
7		6C6
8		7B3/11C6
9	8B5	
10		7C6
11		7D3
12	8B6	
13		7B5
14	9D6	
15	9B6	

CONTACTS

ANSWERBACK	2D5
BREAK KEY	2E6
FORMING OUT FUNCTIONS	6E3
DC1	7C5
DC3	7D6
ENQ	7E6
EOT	5B5
KEYBOARD	2B3
PAPER OUT	5C2
PARALLEL INTERFACE	2D3
READER FEED	8B5
READER (SIGNAL)	2C3
START (AUTO READER)	7C6
STOP (AUTO READER)	7B6
TAPE OUT (AUTO READER)	7B6
TIGHT TAPE (AUTO READER)	6B6
TIGHT TAPE, TAPE OUT, STOP (MANUAL READER)	6B5

CORD

POWER 9C1

DIODES (NOT ON CKT. CARD ASSEMBLY)

CR1 3B3

DISC

DISTRIBUTOR 2C6

FUSES

F1 (MAIN)	9B2
F2 (SMD)	9B2
F3 (48VAC)	9B5
F4 (MOTOR)	10B4
F5 (READER)	8B2

GOVERNOR 10C6

MAGNETS

ANSWERBACK TRIP	5C6
DISTRIBUTOR TRIP	6A3
READER FEED	8C6
SELECTOR	1B6

MOTOR

SYNCHRONOUS	10D4
SERIES GOVERNED	10C6

NETWORKS

Z1	2C2
Z2	6B3
Z3	10C7

RECEPTACLE

CONVENIENCE OUTLET 9C2

RELAYS

MODE

COIL 9C3

CONTACTS:

FORM	TERMS	
C	1,2,3	4A5
C	4,5,6	4E5
C	7,8,9	4D5
C	10,11,12	4C5
A	13,14	4E4
B	15,16	4C3
B	17,18	4D4

MOTOR START 10C4

TDC (P/O 183079 CKT. CARD ASSEM.)

COIL 7A4

CONTACTS:

1	7C3
2	7C6
3	6C6

RESISTORS (NOT ON CKT.CARD ASSEM.)

R1	3B4
R2	10C7
R6 OF RDR PWR.PACK	8D6

SWITCH

LOW PAPER	5C2
MODE	9B3

TERMINAL FIELD

TERMINAL	
1	9D6
2	9B6
3	11D3
4	11B3
5	-
6	-
7	-
8	3B3

TERMINAL STRIP

X (CUSTOMER INTERFACE)

TERMINAL 1	9D2
TERMINAL 2	9B2
TERMINAL 3	4C3
TERMINAL 4	4D3
TERMINAL 5	4D4
TERMINAL 6	4E2
TERMINAL 7	4A2
TERMINAL 8	1C3
TERMINAL 9	1C3

THYRISTOR (TRIAC)
(NOT ON CKT CARD ASSEM.)

Q1 10C7

TRANSISTOR (NOT ON CKT. CARD ASSEM.)

Q2 OF SMD ASSEMBLY 1C5

TIMER

ELAPSED TIME INDICATOR 9C4

TRANSFORMER

T1 SMD	1D3
T2 48V AC	11C2

MODEL 33
RO, KSR AND ASR SETS
3300, 3310, 3320 SERIES

TELETYPE

1180SD-C1

TC 640 (3-69)

ISSUE 1

NOTES

CIRCUIT NOTES

101. FUSING

DESIGNATION	FUNCTIONAL TITLE	FUSE AMP.	POTENTIAL AT FUSE	PHYSICAL LOCATION
F1	MAIN SET FUSE	3A SL-BL	115VAC	CALL CONTROL UNIT
F2	SMD FUSE	3/8A SL-BL	"	"
F3	48VAC SUPPLY	1/2A SL-BL	"	"
F4	MOTOR FUSE	DEPENDS ON MOTOR USED. SEE SHEET B10	"	TYPING UNIT
F5	READER FUSE	3/4A SL-BL	"	READER POWER PACK AT FRONT OF CALL CONTROL UNIT

VOLTAGE SYMBOL	VOLTAGE RANGE
115V AC	103VAC TO 127VAC

FREQUENCY		FREQUENCY RANGE
60Hz	SETS	± 3/4%
50Hz	SETS	± 3/4%
50-60Hz	SETS	48 TO 62Hz

102. OPTIONS

	OPTION	FS LOC	ACTUAL LOC	FACTORY PROVIDED
*	20MA SIGNAL INPUT	1C3, 3B5	9336WD, 1A5, 2D3	
	60MA SIGNAL INPUT	1C3, 3C5		●
*	HALF DUPLEX SIGNALING	4C4, 4E4	9336WD, 2E3	●
	FULL DUPLEX SIGNALING			
*	EVEN PARITY KEYBOARD	2B3 AND 9334WD	9334WD	●
	LEVEL 8 ALWAYS MARK			
	LEVEL 8 ALWAYS SPACE			

*SELECT ONLY ONE OPTION FROM THIS GROUP

EQUIPMENT NOTES

201. THIS DRAWING SHOWS ALL WIRING AND ELECTRICAL COMPONENTS USED ON THIS SERIES OF SETS. THE PRESENCE OF A GIVEN COMPONENT ON A PARTICULAR SET, HOWEVER, DEPENDS UPON THE FEATURES ORDERED ON THAT SET.

INFORMATION NOTES

301. SHEET COORDINATES LOCATION LEGEND

4 C 6
- HORIZONTAL
- VERTICAL
- SHEET NUMBER

(HORIZONTAL, VERTICAL: COORDINATES)

302. ( ) TERMINAL DESIGNATIONS ENCLOSED IN PARENTHESE ARE FOR REFERENCE AND ARE NOT MARKED ON THE COMPONENT.

303. ALL RESISTANCE VALUES IN OHMS AND CAPACITANCE VALUES IN MICROFARADS UNLESS OTHERWISE SPECIFIED.

304. SYMBOLOGY

NORMALLY OPEN CONTACT

NORMALLY CLOSED CONTACT

TRANSFER CONTACT

CIRCLE INDICATES PRESENCE OF REMOVABLE CONNECTION(S) IN THAT NODE OTHER THAN A MULTI-TERMINAL CONNECTOR.
EXAMPLE A: REMOVABLE RELATIONSHIP SHOWN.
EXAMPLE B: REMOVABLE RELATIONSHIP NOT SHOWN.

FS10 M — CIRCUITRY WITHIN SINGLE SOLID LINE ENCLOSURE IS SHOWN FOR REFERENCE ONLY. IT IS SHOWN IN DETAIL ELSEWHERE IN THE SAME SD.

BREAK 9334WD — A DOUBLE SOLID LINE ENCLOSURE MEANS THE DETAILED INFORMATION IS FOUND IN A DIFFERENT SD OR WD.

18182SMD — DASHED LINE BOUNDARIES INDICATE A RELATION BETWEEN OR COMMONALTY OF THE ITEMS WITHIN. LOOK FOR NAME OR NUMBER WITHIN THE BOUNDARY.

CIRCUIT COMMON RETURN

FRAME OR CHASSIS GROUND

20 MA / 60 MA — LETTER OR TITLE IN CIRCLE OR OVAL INDICATES PRESENCE OF WIRING OPTION WHICH THE CUSTOMER CAN ARRANGE TO SUIT HIS CHOICE OR REQUIREMENT WITHIN THE POSSIBILITIES SHOWN.

WIRING STATUS:

00-B — B-DENOTES WIRING BEFORE THE CHANGE DESCRIBED BY THE DESIGNATED NOTE ENTERED THE PRODUCT.

00-A — A-DENOTES WIRING AFTER THE CHANGE DESCRIBED BY THE DESIGNATED NOTE ENTERED THE PRODUCT.

WDP

MODEL 33
RO, KSR AND ASR SETS
3300, 3310, 3320 SERIES

TELETYPE

1180SD-D1

TC 640 (3-69)

ISSUE 1

BD-1

CIRCUIT BLOCK DIAGRAM

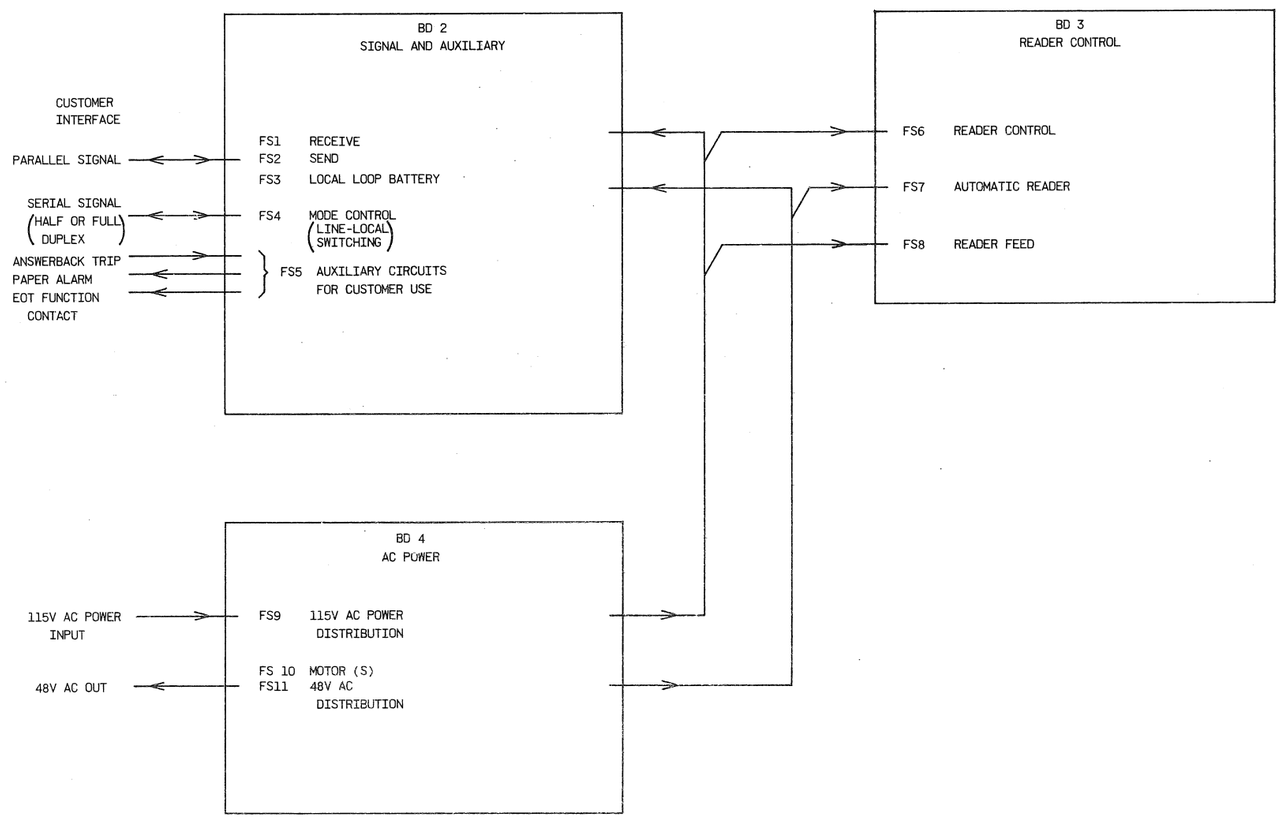

WDP

MODEL 33
RO, KSR, AND ASR SETS
3300, 3310, 3320 SERIES

TELETYPE

1180 SD-HI

TC 640 (3-69)

( ) INDICATES NUMBER OF WIRES
REPRESENTED BY THE LINE BELOW.

BD-2

SIGNAL AND AUXILIARY

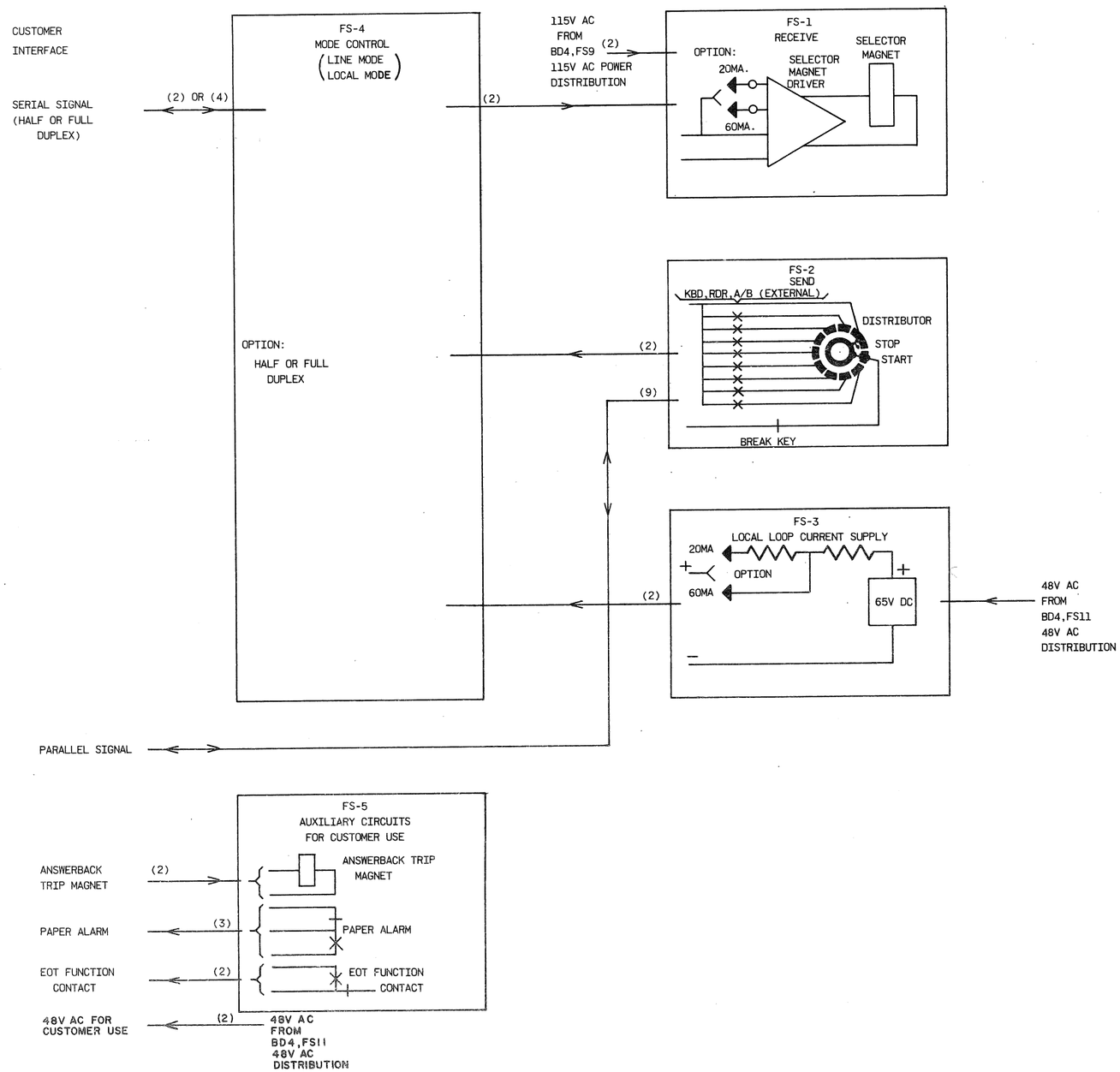

ISSUE
1

MODEL 33
RO, KSR, AND ASR SETS
3300, 3310, 3320 SERIES

TELETYPE

1180 SD-H2

TC 640 (3-69)

( ) INDICATES NUMBER OF WIRES
REPRESENTED BY THE LINE BELOW.

ISSUE 1

BD-3

READER CONTROL
(ASR SET ONLY)

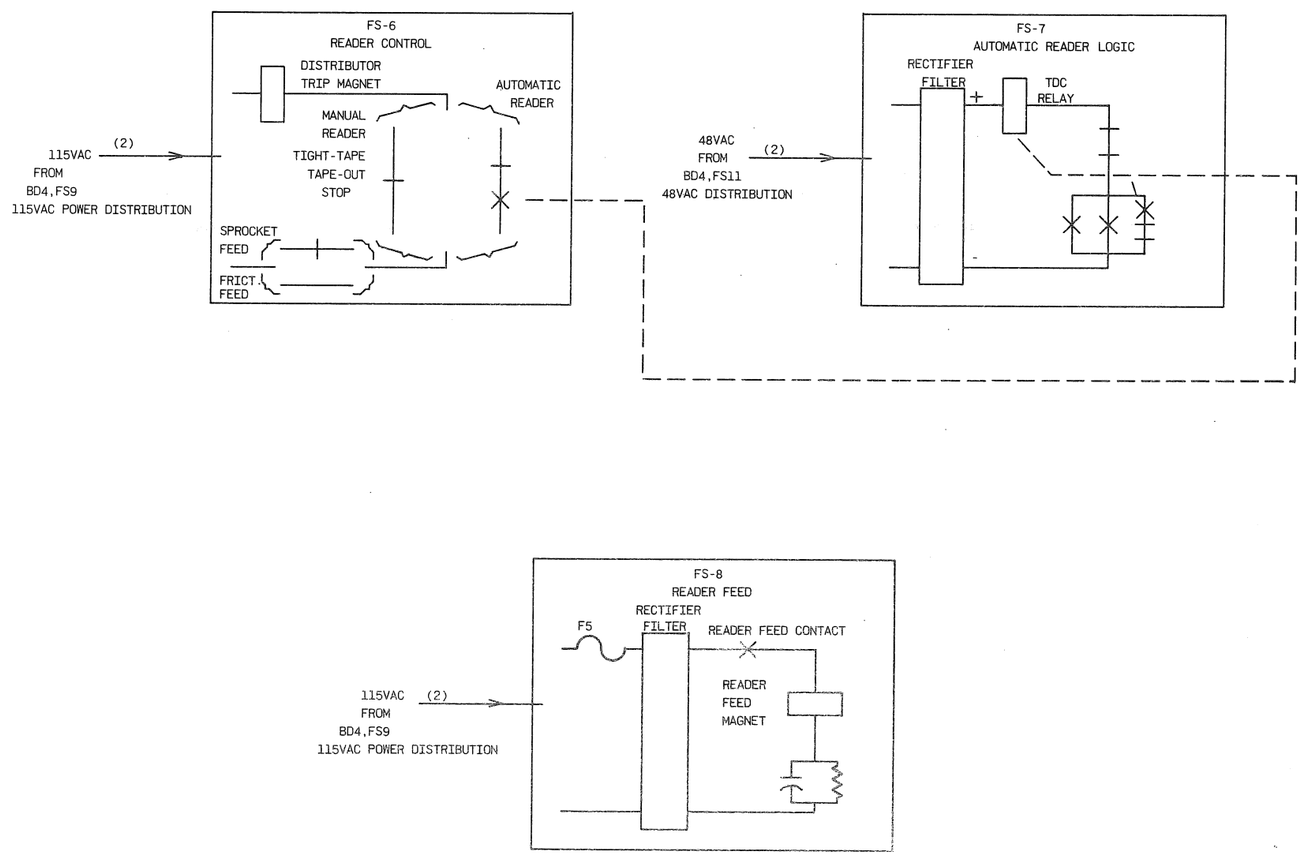

MODEL 33
RO, KSR, AND ASR SETS
3300, 3310, 3320 SERIES

TELETYPE

1180 SD-H3

TC 640 (3-69)

( ) INDICATES NUMBER OF WIRES
REPRESENTED BY THE LINE BELOW.

ISSUE 1

BD-4
AC POWER

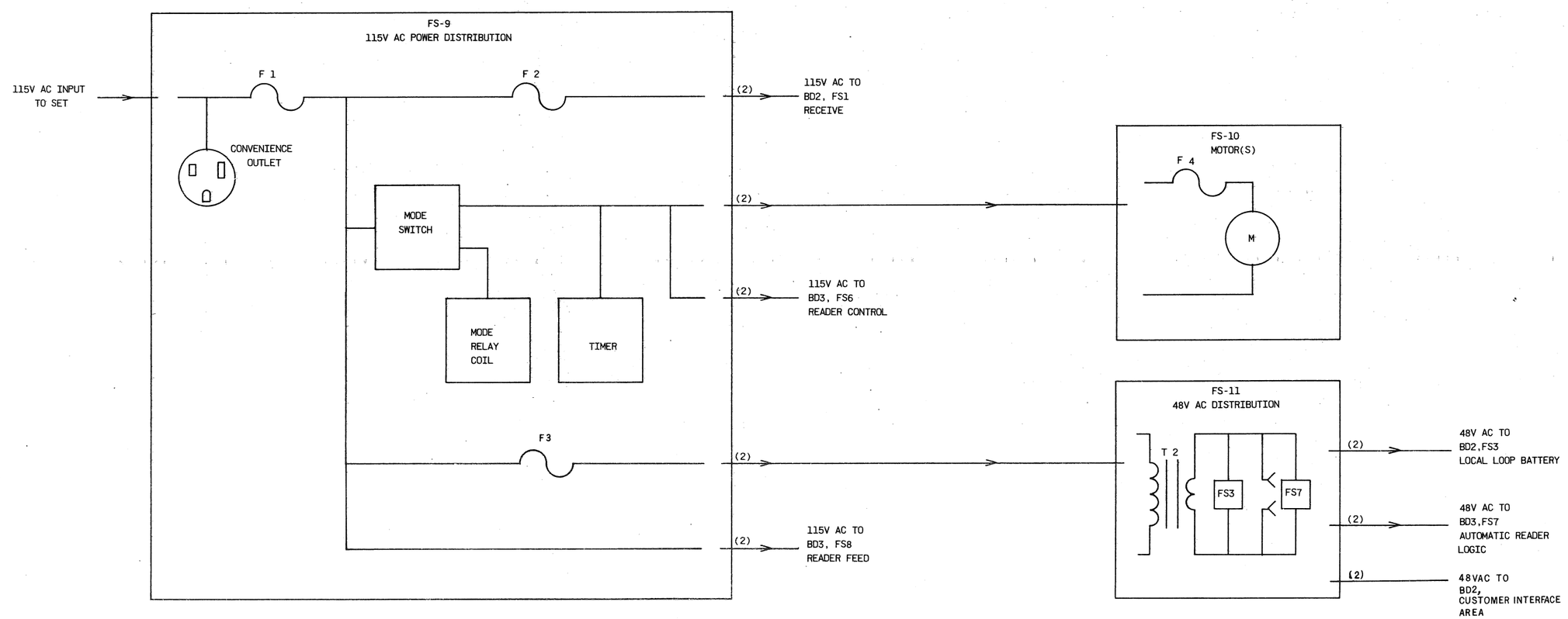

MODEL 33
RO, KSR, AND ASR SETS
3300, 3310, 3320 SERIES

TELETYPE

1180 SD-H4

TC 640 (3-69)

NOTES

SCHEMATIC

1. SYMBOLOGY

HEAVY LINES REPRESENT CIRCUIT PATHS PROVIDED BY METAL PLATES IN CONTACT BLOCK ASSEMBLY.

CIRCLE INDICATES PRESENCE OF REMOVABLE CONNECTION IN THAT NODE OTHER THAN A MULTI-TERMINAL CONNECTOR.

FEMALE TERMINAL OF MULTI-TERMINAL CONNECTOR

MALE TERMINAL OF MULTI-TERMINAL CONNECTOR

NORMALLY OPEN CONTACT

NORMALLY CLOSED CONTACT

CONTACT	DEFINITION OF NORMAL
CONTROL, SHIFT, BREAK	KEY NOT DEPRESSED
LEVEL 1 THROUGH 8	RESPECTIVE CODE BARS ARE IN THE SPACING POSITION, AND KEYBOARD IS TRIPPED

SCHEMATIC AND ACTUAL

2. SYMBOLOGY

( ) TERMINAL DESIGNATION WITHIN IS FOR REFERENCE AND IS NOT MARKED ON THE COMPONENT.

3. LEVEL 8 OPTION **WIRED FOR (A) AT FACTORY**

OPTION	LEAD 1	LEAD 2	LEAD 3	LEAD 4
(A) EVEN PARITY	ON	OFF	OFF	ON
(B) LEVEL 8 ALWAYS MARK	OFF	ON	ON	ON
(C) LEVEL 8 ALWAYS SPACE	EITHER ONE ON OR BOTH OFF		ON OR OFF	OFF

(A,B / 4) — FUNCTIONAL OPTIONS FOR WHICH THIS PATH MUST BE CONNECTED; REFERENCE DESIGNATION OF ASSOCIATED LEAD

ACTUAL

4. SYMBOLOGY

WIRING LEGEND:

KC-8-W-P — DISTANT TERMINATING AREA; DISTANT TERMINATING TERMINAL; WIRE COLOR (1,2, OR 3 COLORS)

CONNECTORS:

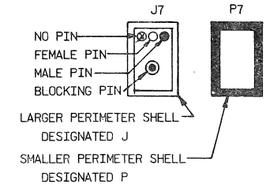

WIRE SPLICE (NOT REPRESENTED ON SCHEMATIC)

5. WIRE COLOR CODE:

BK-BLACK	G-GREEN
BR-BROWN	BL-BLUE
R-RED	P-PURPLE
O-ORANGE	S-SLATE
Y-YELLOW	W-WHITE

SCHEMATIC

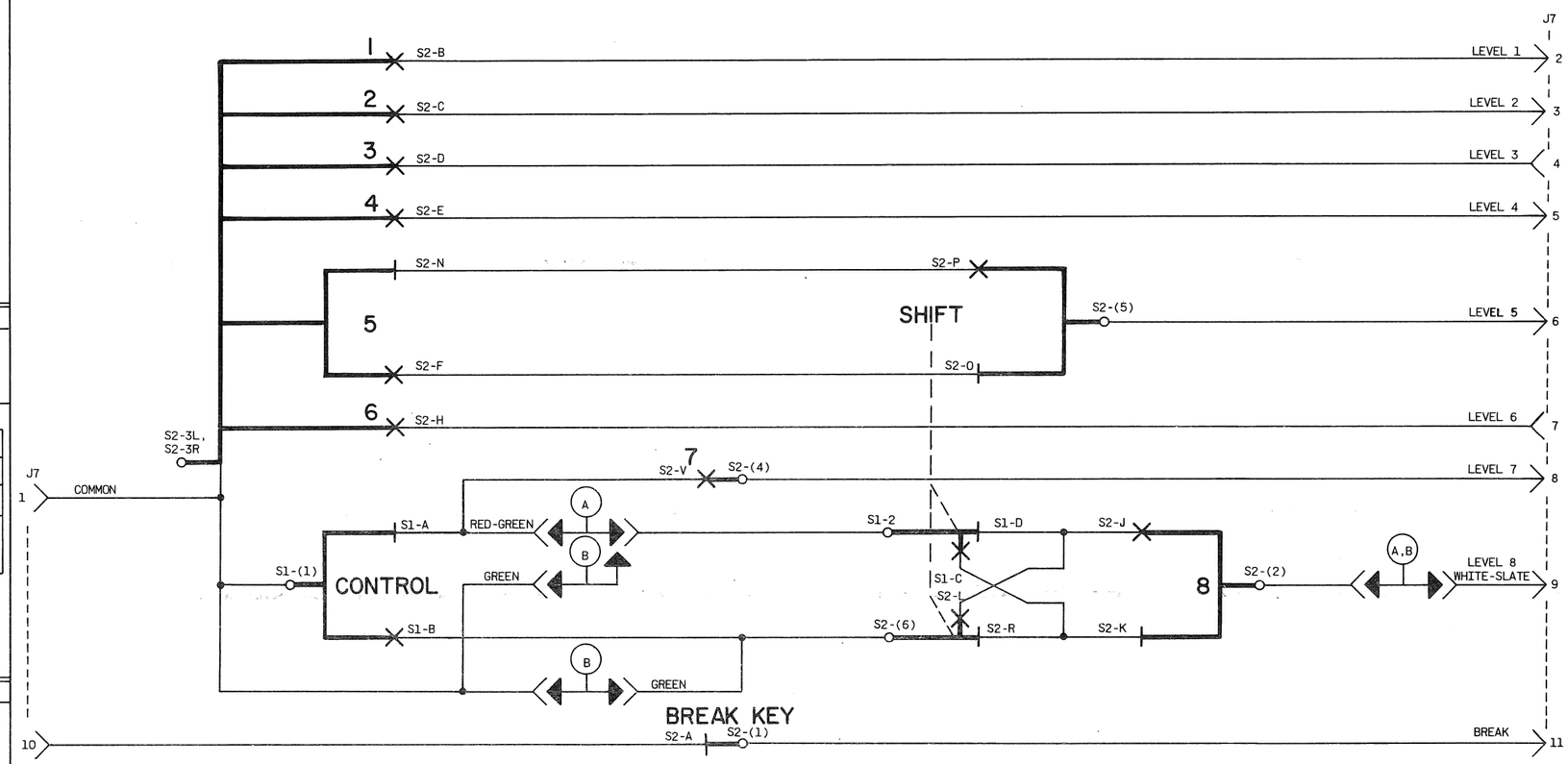

ACTUAL

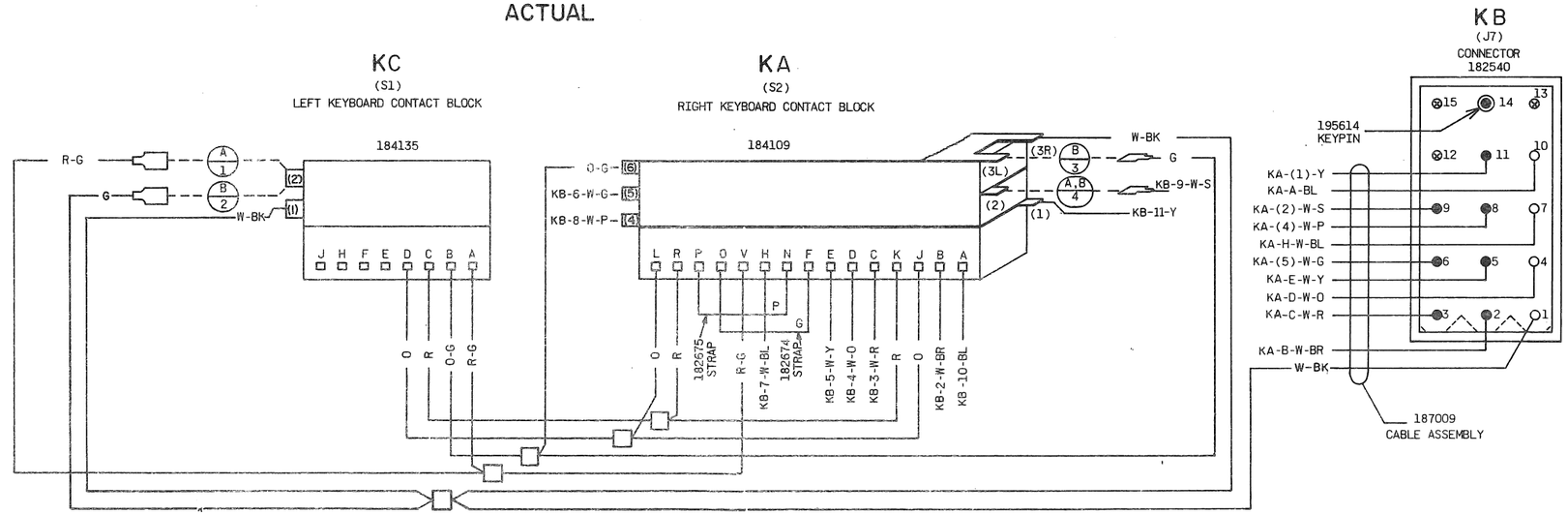

REVISIONS		
ISSUE	DATE	AUTH. NO.
1	7-7-71	21643R
2	1-12-72	4853-RC

WDP

MODEL 33 KEYBOARD
UK 819

APPROVALS		
PROJ. SUPV.	PROJ. DIR.	MFG. REL. COMPL.
DFR	RRS	

ENGR. DFR	DSGNR.
DRN. SLD	DATE 4-27-71
R&D FILE	6-A152.219A
S-NUMBER	61,910

TELETYPE

9334 WD

TC 434 (3-69)

NO.	NOTES
1.	THIS DRAWING SHOWS ALL WIRING AND ELECTRICAL COMPONENTS USED ON THIS SERIES OF SETS. THE PRESENCE OF A GIVEN COMPONENT ON A PARTICULAR SET, HOWEVER, DEPENDS UPON THE FEATURES ORDERED ON THAT SET.
2.	WIRE COLOR CODE: BK-BLACK G-GREEN BR-BROWN BL-BLUE R-RED P-PURPLE O-ORANGE S-SLATE Y-YELLOW W-WHITE
3.	COMPONENT VIEWS SHOWN FROM WIRED SIDE.
4.	SYMBOLOGY: ( ) TERMINAL DESIGNATION WITHIN IS FOR REFERENCE AND IS NOT MARKED ON THE COMPONENT. * DENOTES 18AWG WIRE ALL OTHER IS 24AWG WIRING LEGEND: DISTANT TERMINATING AREA DISTANT TERMINATING TERMINAL WIRE COLOR (1,2, OR 3 COLORS) J-1-W-B CONNECTORS:
5.	REFER TO 1180SD FOR A RELATED SET SCHEMATIC DIAGRAM.
6.	CROSS REFERENCE: THIS WIRING DIAGRAM SAME AS 9387WD EXCEPT FOR AREA DESIGNATIONS.

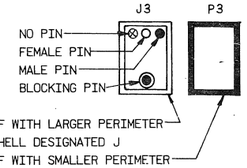

ACTUAL

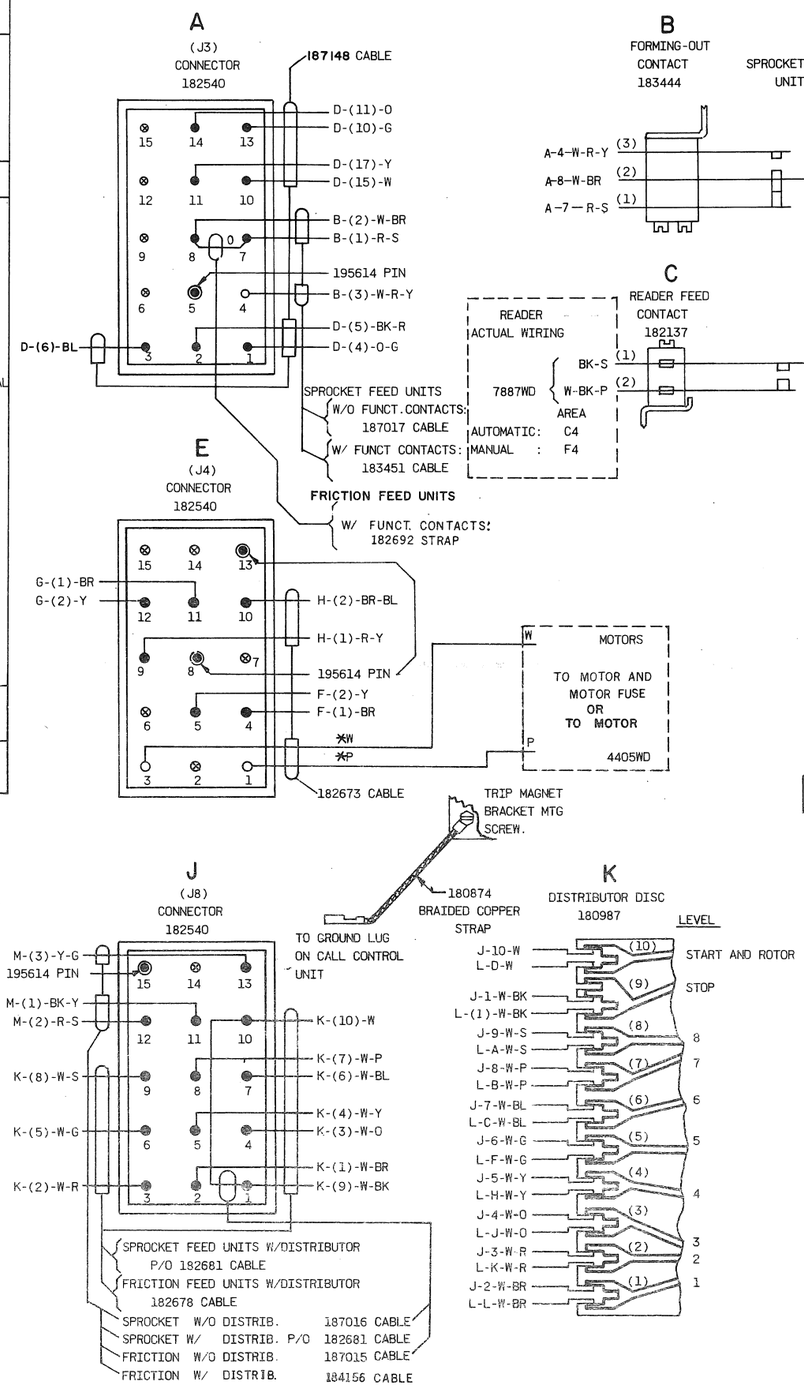

REVISIONS		
ISSUE	DATE	AUTH. NO.
1	7-7-71	21643R
2	8-5-71	4243-RC
3	1-12-72	4853-RC
4	1-17-72	4455

WDP

WIRING DIAGRAM FOR MODEL 33 TYPING UNITS
UP 1--/---/--
UP 2--/---/--

APPROVALS		
PROJ. SUPV. DAR	PROJ. DIR. RRS	MFG. REL. COMPL.
ENGR. DFR	DSGNR.	
DRN. SLD	DATE 5-13-71	
R&D FILE 6-A152 219A		
S-NUMBER 61,910		

TELETYPE

9335 WD

TC 434 (3-69)

SHEET INDEX

CONTENTS	SHEET NO.	ISSUE NO. 1	2	3	4	5	6	7	8	9	10	11	12	13	14	15	16	17	18	19	20	21	22	23	24	25	SHEET NO.
181361 & 181861 MOTORS, 60 HZ	1				11	12	13	13																			1
181870 & 182241 MOTORS, 60HZ 182267 MOTOR, 50 HZ	2				12	13	14	14																			2
333521 AC SERIES MOTOR	3					1	2	3																			3

SUPPORTING INFORMATION

CATEGORY	NO.

SHEET INDEX NOTES

1. WHEN CHANGES ARE MADE IN THIS DRAWING ONLY THOSE SHEETS AFFECTED WILL BE REISSUED.
2. THIS SHEET INDEX WILL BE REISSUED AND UPDATED EACH TIME ANY SHEET OF THE DRAWING IS REISSUED OR A NEW SHEET IS ADDED.
3. THE LAST COMPLETED COLUMN INDICATES THE LATEST ISSUE NUMBER OF THE SHEET INDEX.
4. SHEETS THAT ARE NOT CHANGED WILL RETAIN THEIR EXISTING ISSUE NO.
5. ISSUE DATES WILL BE SHOWN ON THE SHEET INDEX ONLY.

REVISIONS

ISSUE	DATE	AUTH. NO.
1	3-9-66	89721-R
2	1-26-70	92607
3	2-19-70	99947-4
4	8-25-70	621
5	12-9-70	2145
6	12-15-70	2220
7	11-19-71	4539

WDP

ACTUAL WIRING DIAGRAM FOR MODEL 32/33 MOTORS

APPROVALS		
PROJ. SUPV.	PROJ. DIR.	MFG. REL. COMPL. LAM
ENGR. PRS	DSGNR.	
DRN. LAB	DATE 12-15-70	
R & D FILE		
S-NUMBER		

TELETYPE

4405 WD

TC 639 (3-69)

NO.	NOTES
1.	WIRING LEGEND: DISTANT TERMINATING AREA; DISTANT TERMINATING DESIGNATION; A-2-W [6-B] — NOTE-5; WIRE COLOR CODE
2.	COLOR CODE: BK-BLACK, BL-BLUE, BR-BROWN, Y-YELLOW, G-GREEN, P-PURPLE, R-RED, S-SLATE, O-ORANGE, W-WHITE
3.	ASSOCIATED SCHEMATIC 4403WD.
4.	182272 RESISTOR-10 OHMS, 5 WATT (PART OF 181387 CAPACITOR W/RESISTOR ASSEMBLY).
5.	WIRING STATUS: RECTANGULAR BOX INDICATES HISTORY OF WIRING CHANGES. [00-B] B - DENOTES WIRING BEFORE THE CHANGE DESCRIBED BY THE DESIGNATED NOTE ENTERED THE PRODUCT. NOTE NUMBER. [00-A] A - DENOTES WIRING AFTER THE CHANGE DESCRIBED BY THE DESIGNATED NOTE ENTERED THE PRODUCT.
6.	185731 STRAP AND FUSE ASSEMBLY NOT INCLUDED IN EARLY SETS.

MOTOR	FUSE VALUE	FUSE PART NO.
182241	2.0 AMP	138538
182267	1.8 AMP	320246

ACTUAL WD FOR 181361 MOTOR (60 HERTZ)

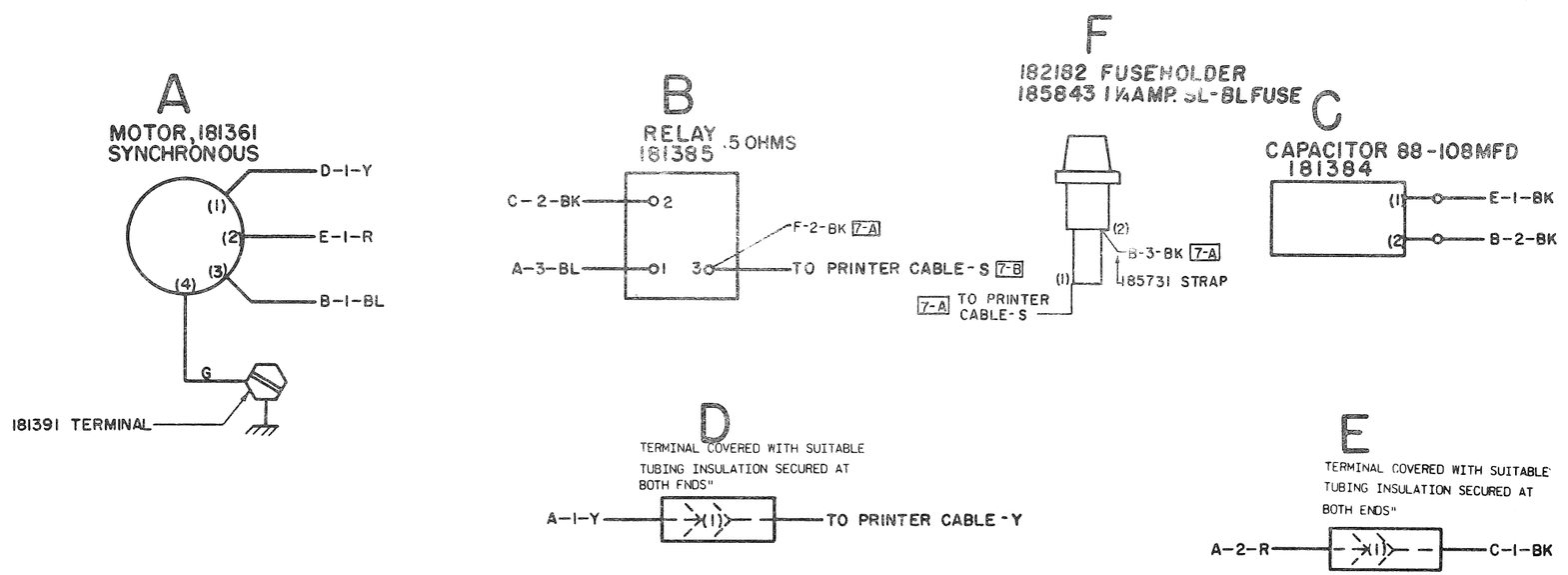

ACTUAL WD FOR 181861 MOTOR (60 HERTZ)

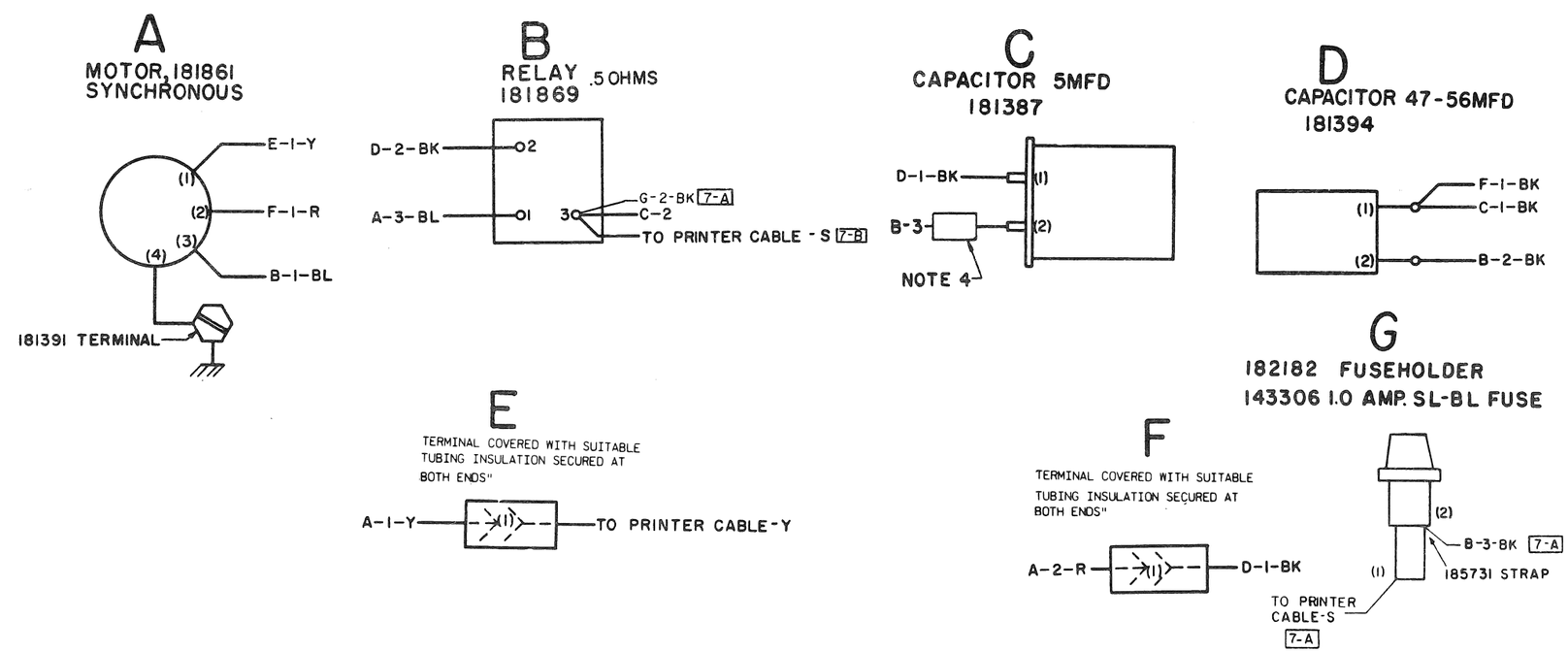

4405 WD

REVISIONS

ISSUE	DATE	AUTH. NO.
A2	3-3-62	30-973
B3	11-5-62	30-5330
B4	1-3-63	30-5469
B5	11-11-63	78856
C	6-9-64	81773
7	6-8-65	37050
8	1-13-66	88841-3
9	3-9-66	89[illegible]2. 2
10	2-18-70	99[illegible]47-4
11	8-24-70	621
12	12-9-70	2145
13	12-14-70	2220

NOTE:
REVISION INFORMATION MUST ALSO BE REFLECTED ON THE ISSUE CONTROL RECORD, WHICH IS A PART OF THIS DRAWING.

SEE ISSUE CONTROL RECORD FOR COMPLETE LIST OF SHEETS COMPRISING THIS W.D.

SHEET 1 WOP

ACTUAL WIRING DIAGRAM FOR

FOR MODEL 32 & 33 MOTORS

APPROVALS

D AND R	E OF M

E-NUMBER

PROD. NO. 4405WD

DATE 2-8-62

P.D. FILE NO. 1-231.153AA

DRAWN | CHKD.

ENGD. P.R.S. | APPD.

TELETYPE CORPORATION

4405 WD

SEE SHEET 1 FOR NOTES

NOTE:
REVISION INFORMATION MUST ALSO BE REFLECTED ON THE ISSUE CONTROL RECORD, WHICH IS A PART OF THIS DRAWING.

4405WD

REVISIONS

ISSUE	DATE	AUTH. NO.
Ø2	3-3-62	30-978
Ø3	11-5-62	30-5330
Ø4	1-3-63	30-5469
Ø5	11-11-63	78856
6	6-9-64	81773
7	6-8-65	87050
8	1-13-66	88841-3
9	3-9-66	89721-2
10	1-26-67	92607
11	2-18-70	99947-4
12	8-24-70	621
13	12-9-70	2145
14	12-14-70	2220

ACTUAL WD FOR 181870 MOTOR (60 HERTZ)

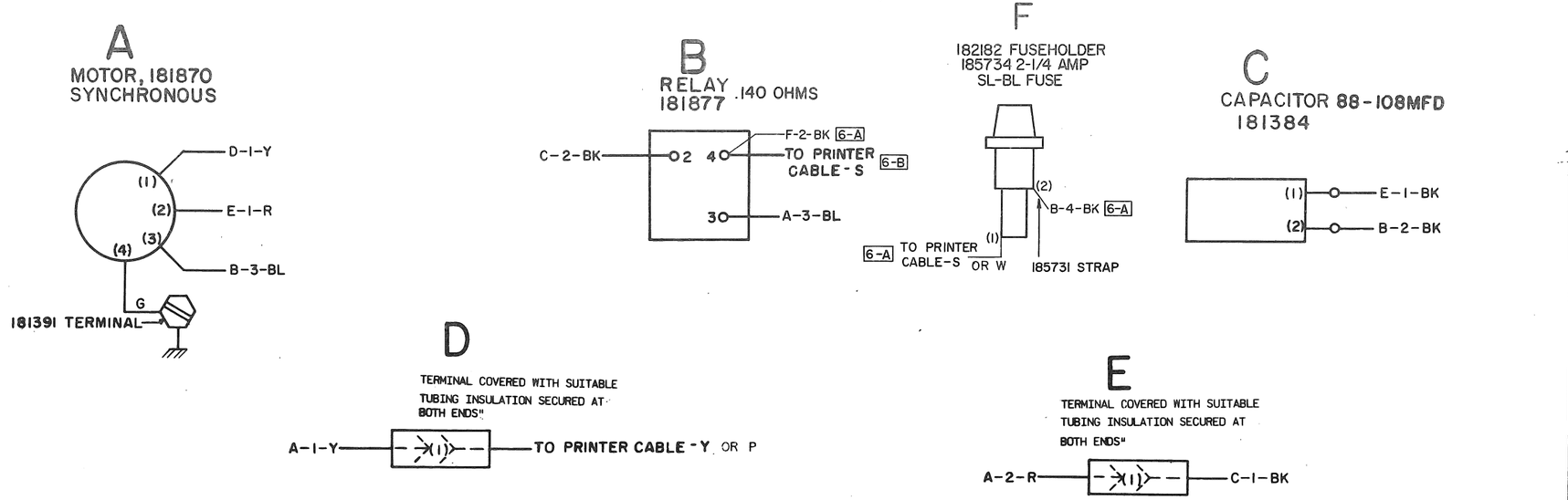

ACTUAL WD FOR 182241 MOTOR (60 HERTZ)
ACTUAL WD FOR 182267 MOTOR (50 HERTZ)

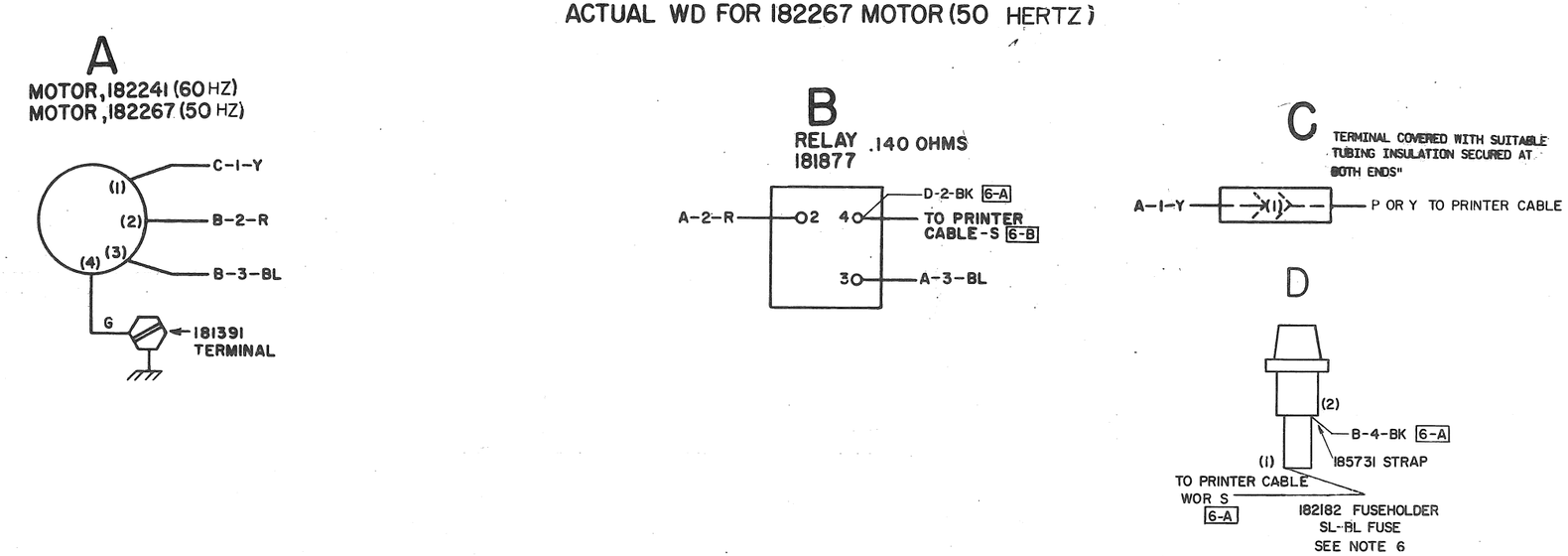

SEE ISSUE CONTROL RECORD FOR COMPLETE LIST OF SHEETS COMPRISING THIS W.D.

SHEET 2

ACTUAL
WIRING DIAGRAM

FOR MODEL 32 & 33
MOTORS

APPROVALS

D AND R	E OF M

E-NUMBER	
PROD. NO.	4405WD
DATE	2-8-62
P.D. FILE NO.	1-231.153AA
DRAWN R.H.B.	CHKD.
ENGD. P.R.S.	APPD.

TELETYPE
CORPORATION

4405WD

SEE SHEET 1 FOR NOTES

ACTUAL WD FOR
333521 AC SERIES MOTOR

NOTE:
REVISION INFORMATION MUST ALSO BE REFLECTED ON THE ISSUE CONTROL RECORD, WHICH IS A PART OF THIS DRAWING.

REVISIONS		
ISSUE	DATE	AUTH. NO.
2	12-14-70	2220
3	11-19-71	4539

A
SERIES MOTOR
183991

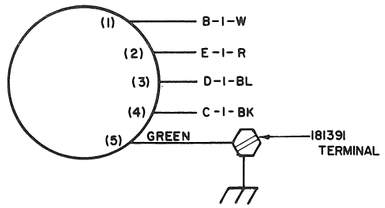

B
TERMINAL COVERED WITH SUITABLE TUBING INSULATION SECURED AT BOTH ENDS

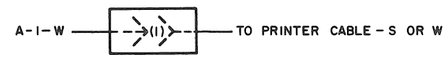

C
TERMINAL COVERED WITH SUITABLE TUBING INSULATION SECURED AT BOTH ENDS

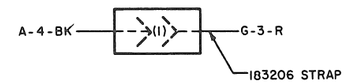

D
TERMINAL COVERED WITH SUITABLE TUBING INSULATION SECURED AT BOTH ENDS

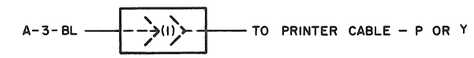

E
TERMINAL COVERED WITH SUITABLE TUBING INSULATION SECURED AT BOTH ENDS

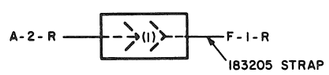

F
BI-DIRECTIONAL SWITCH
334876

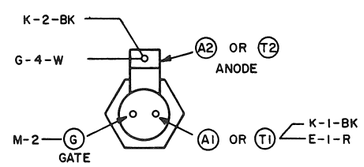

G
TERMINAL POINT
183204
(LEFT)

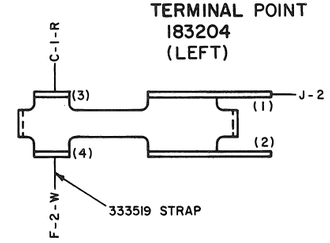

H
TERMINAL POINT
183204
(RIGHT)

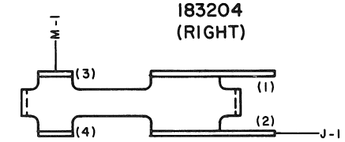

J
BRUSH ASSEMBLY
183207

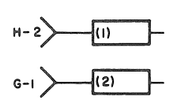

L
GOVERNOR ASSEMBLY
183212

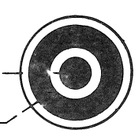

K
NETWORK
153631

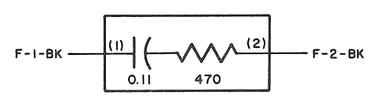

M
RESISTOR
137438

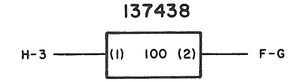

ENTIRE RESISTOR (BODY & LEADS) TO BE INSULATED USING SUITABLE TUBING.

SEE ISSUE CONTROL RECORD FOR COMPLETE LIST OF SHEETS COMPRISING THIS W.D.

SHEET 3 WDP

ACTUAL
WIRING DIAGRAM
FOR MODEL 32/33
MOTORS

APPROVALS		
PROJ. SUPV.	PROJ. DIR.	MFG. REL. COMPL.
ENGR. A. S.	DSGNR. A. S.	
DRN. C.E.C.	DATE 10-1-70	
R & D FILE 1-231. 153AA		
S-NUMBER		

TELETYPE

4405WD

SHEET INDEX

CONTENTS	SHEET NO.	1	2	3	4	5	6	7	8	9	10	11	12	13	14	15	16	17	18	19	20	21	22	23	24	25	26	27	28	SHEET NO.
		ISSUE NO.																												
SHEET INDEX AND NOTES	A1	1	2																											A1
MODEL 33 CALL CONTROL UNIT UCC 6 WIRING	B1	1	2																											B1
MODEL 33 CALL CONTROL UNIT UCC 6 WIRING	B2	1	2																											B2

SUPPORTING INFORMATION

CATEGORY	NO.
WIRING DIAGRAM PACKAGE FOR MODEL 33 RO, KSR, AND ASR SETS 3300, 3310, 3320 SERIES	WDP 0316

REVISIONS

ISSUE	DATE	AUTH. NO.
1	8-6-71	21643R
2	5-23-73	8197

NOTES

1. WIRE COLOR CODE:

   BK - BLACK G - GREEN
   BR - BROWN BL - BLUE
   R - RED P - PURPLE
   O - ORANGE S - SLATE
   Y - YELLOW W - WHITE

2. COMPONENT VIEWS SHOWN FROM WIRED SIDE.

3. SYMBOLOGY

   ( ) TERMINAL DESIGNATION WITHIN IS FOR REFERENCE AND IS NOT MARKED ON THE COMPONENT.

   — — — ASSOCIATED TERMINALS, CONNECTIONS, OR FUNCTIONS.

   * DENOTES 20 AWG. WIRE.

   ** DENOTES 18AWG WIRE. ALL OTHER IS 24AWG.

   —WIRE SPLICE (NOT REPRESENTED ON SCHEMATIC)

4. COMPONENT IDENTIFICATION:

   AB — SHEET, LOCATION
   (C1) — (SCHEMATIC DESIGNATION)
   CAPACITOR — GENERIC PART NAME
   181814 — PART NUMBER

   

   PART ILLUSTRATION

5. WIRING LEGEND:

   DISTANT TERMINATING AREA
   DISTANT TERMINATING TERMINAL
   WIRE COLOR
   AB-(2)-W-G (1,2, OR 3 COLORS)

   CONNECTORS:

   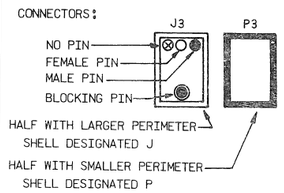

6. ALL WIRING PART OF 181820 CABLE ASSEMBLY EXCEPT WHERE OTHERWISE SPECIFIED.

7. REFER TO 1180SD FOR A RELATED SET SCHEMATIC DIAGRAM.

8. THIS DRAWING SHOWS ALL WIRING AND ELECTRICAL COMPONENTS USED ON THIS SERIES OF SETS. THE PRESENCE OF A GIVEN COMPONENT ON A PARTICULAR SET, HOWEVER, DEPENDS UPON THE FEATURES ORDERED ON THAT SET.

9. CUSTOMER OPTIONS:

   THIS UNIT CONTAINS WIRING OPTIONS FOR INTERFACING A 20MA OR 60MA DC CURRENT SIGNAL LOOP AS WELL AS INTERFACING IN A HALF DUPLEX (TWO WIRE) OR FULL DUPLEX (4 WIRE) CONFIGURATION.

   20 AND 60MA SIGNALLING CURRENT OPTION WIRING APPEARS AT THE COMPONENTS DESIGNATED AC AND BL.

   HALF AND FULL DUPLEX OPTION WIRING APPEARS AT COMPONENT BL.

   OPTION WIRING SHOULD BE CONNECTED AS INDICATED FOR THE DESIRED OPTION.

   THIS UNIT HAS BEEN PRE-WIRED AT THE FACTORY FOR 60MA DC, HALF DUPLEX OPERATION.

10. REFER TO 4970WD FOR WIRING OF 181815 SELECTOR MAGNET DRIVER ASSEMBLY WHICH IS ALSO PART OF THIS UNIT.

SHEET INDEX NOTES

1. WHEN CHANGES ARE MADE IN THIS DRAWING ONLY THOSE SHEETS AFFECTED WILL BE REISSUED.
2. THIS SHEET INDEX WILL BE REISSUED AND UPDATED EACH TIME ANY SHEET OF THE DRAWING IS REISSUED OR A NEW SHEET IS ADDED.
3. THE LAST COMPLETED COLUMN INDICATES THE LATEST ISSUE NUMBER OF THE SHEET INDEX.
4. SHEETS THAT ARE NOT CHANGED WILL RETAIN THEIR EXISTING ISSUE NO.
5. ISSUE DATES WILL BE SHOWN ON THE SHEET INDEX ONLY.

WDP

WIRING DIAGRAM FOR
MODEL 33
CALL CONTROL UNIT
UCC 6

APPROVALS

PROJ. SUPV.	PROJ. DIR.	MFG. REL. COMPL.
DAR	RRS	

ENGR. OFD	DSGNR.
DRN. S.L.D.	DATE 6-2-71
R&D FILE 6-A152 219A	
S-NUMBER 61.910	

TELETYPE

9336WD-A1

TC 434 (3-69)

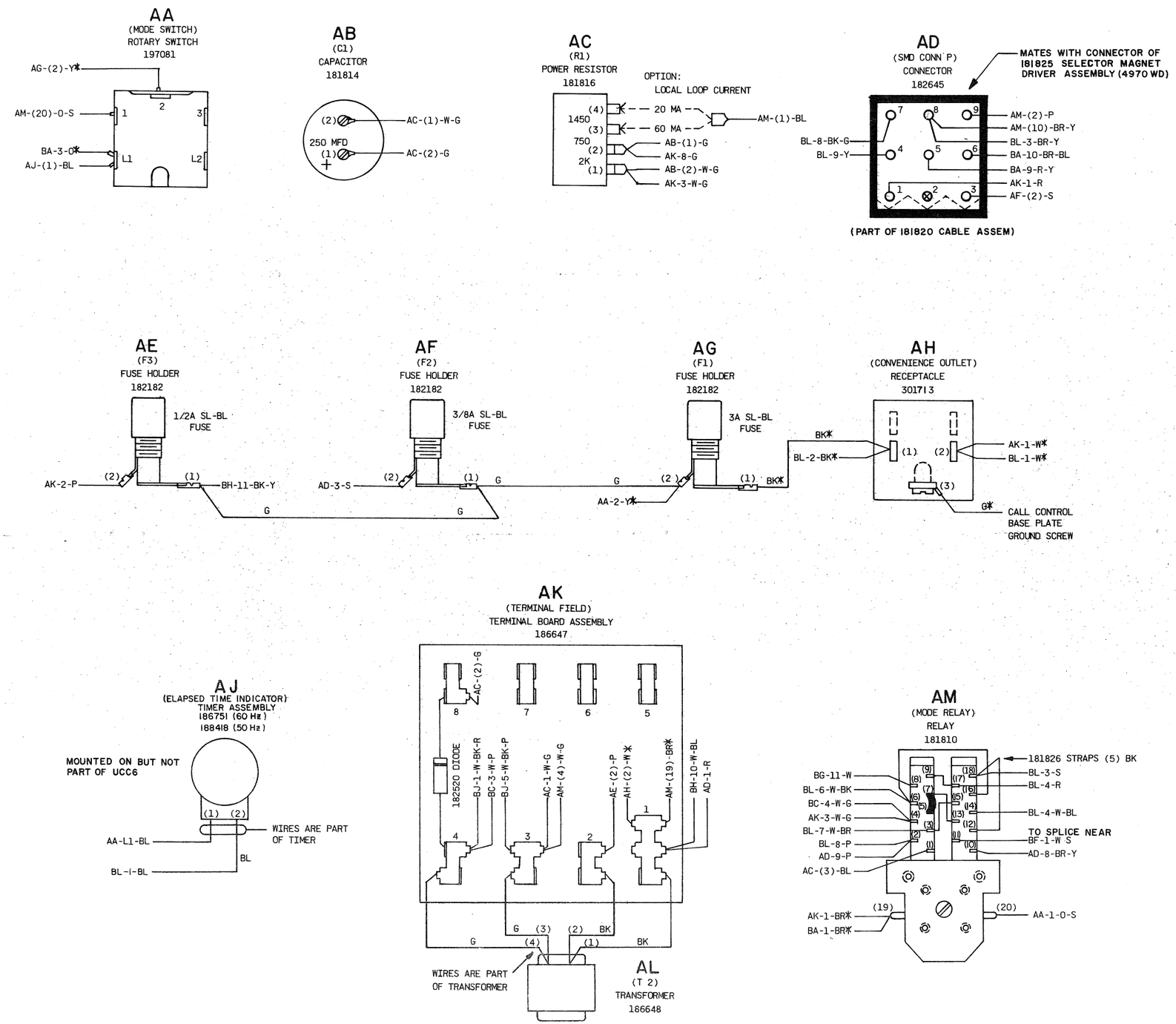

REVISIONS		
ISSUE	DATE	AUTH. NO.
1	8-6-71	21643R
2	5-23-73	8197

WIRING DIAGRAM FOR
MODEL 33
CALL CONTROL UNIT
UCC 6

APPROVALS		
PROJ. SUPV. DFR	PROJ. DIR. RKS	MFG. REL. COMPL.
ENGR. OFD	DSGNR.	
DRN. S.L.D.	DATE	
R&D FILE 6-A152.219A		
S-NUMBER 61,910		

TELETYPE

9336WD-B1

TC 434 (3-69)

ISSUE 1 2

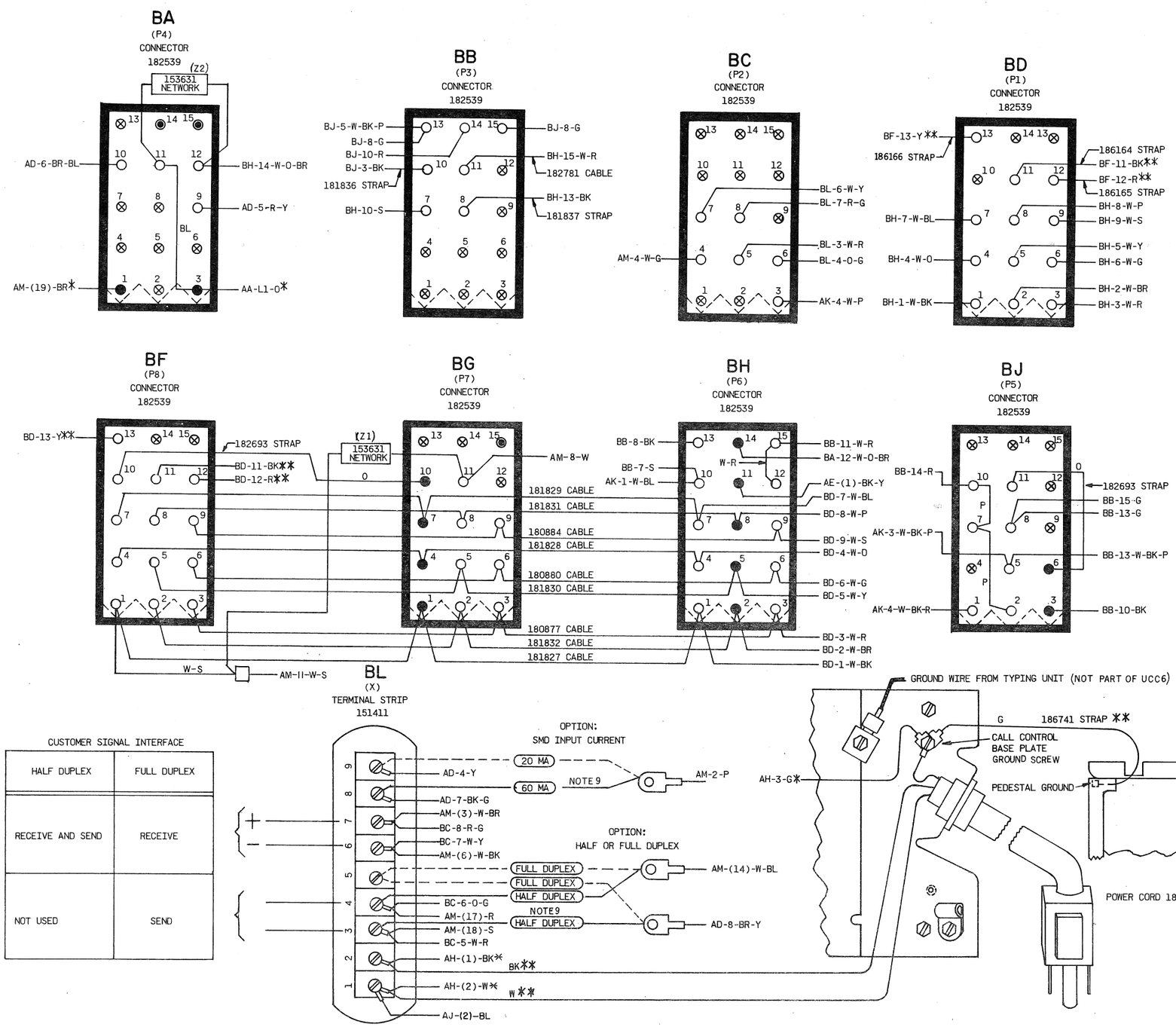

WIRING DIAGRAM FOR
MODEL 33 CALL CONTROL UNIT
UCC 6

TELETYPE

9336WD-B2

TC 640 (3-69)

NO.	NOTES
1.	WIRING CODE DISTANT TERMINATING AREA DISTANT TERMINATING POINT COLOR CODE A 3 - BL
2.	SEE 4979WD FOR SCHEMATIC WIRING DIAGRAM
3.	USE CABLE 181818
4.	* DENOTES #20 AWG WIRE. ALL OTHERS #24AWG
5.	SOME 182695 UNITS CONTAIN 330793 OR 182722 TRANSFORMER AND 182696 CABLE WITH 182536 CONNECTOR. SOME 181815 UNITS CONTAIN 330793 OR 182722 TRANSFORMER

4970 WD

ISSUE	DATE	AUTH. NO.
2	8-[illegible]-62	30-1265
3	8-15-63	77081
4	1-31-64	79903
5	5-10-68	95523-4
6	1-14-71	736

A
CAPACITOR FILTER
(182501)

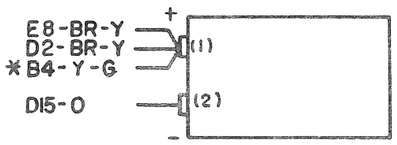

B
TRANSFORMER, POWER
(337992) 50/60 Hz
NOTE 5

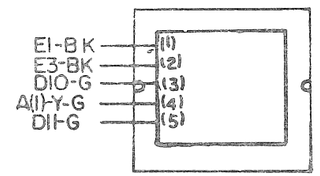

C
TRANSISTOR, POWER
(181675)

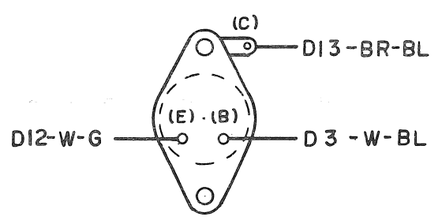

D
CONNECTOR, CARD
(181819)
NOTE 5

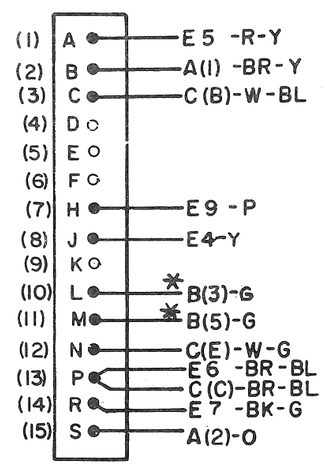

E
CONNECTOR, RECEPTACLE
(182716)

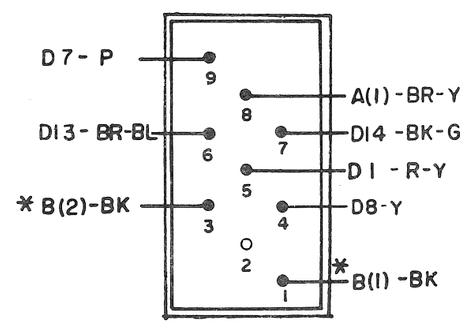

WDP

ACTUAL WIRING DIAGRAM FOR 182695 & 181815 SELECTOR MAGNET DRIVER

APPROVALS	
D AND R	E OF M
E-NUMBER	
PROD. NO. 4970 WD	
DATE: 6-22-62	
P.D. FILE NO 1-165.153AA	
DRAWN C.A.	CHKD.
ENGD. P.R.S.	APPD.

TELETYPE CORPORATION

4970 WD

ET108147
TC255(6-54)

NO.	NOTES
1.	WIRING LEGEND: DISTANT TERMINATING AREA / DISTANT TERMINATING DESIGNATION / COLOR CODE — DB14-BL
2.	WIRE COLOR CODE: W-WHITE, BL-BLUE, BK-BLACK, BR-BROWN, O-ORANGE, P-PURPLE, Y-YELLOW, S-SLATE, G-GREEN, R-RED
3	TERMINALS DESIGNATED ( ) DO NOT APPEAR ON COMPONENT.
4.	FOR TELETYPE PERSONNEL REFERENCES: SPECIFICATION 60421S
5.	CONNECTORS VIEWED FROM WIRED END.
6.	FOR SCHEMATIC WIRING DIAGRAM SEE 7882 WD OR 8159 WD.
7.	ASSOCIATED UNIT ACTUAL WIRING DIAGRAMS: 7884WD PRINTER - UP800,801,802,803,820; 7885WD KEYBOARD - UK800,804; 7886WD MOTOR; 7888WD CALL CONTROL - UCC-3; 4970WD SELECTOR MAGNET DRIVER; 8158 WD CALL CONTROL - UCC 26; 8160 WD PRINTER - UP 836
8.	OPTIONAL UX-801 AUTOMATIC READER - 183075 CABLE ASSEMBLY. USED ONLY WITH UP801, 803, 820 PRINTER ASSEMBLIES.
9.	MANUAL READER - UX800 183074 CABLE ASSEMBLY. USED ONLY WITH UP801, 803 PRINTER ASSEMBLIES.
10.	THESE COMPONENTS ARE MOUNTED ON UP801, 803, 820 PRINTER ASSEMBLIES BUT ACTUALLY ARE PART OF READER CIRCUIT. SEE PRINTER 7884WD.
11.	182692 CABLE ASSEMBLY (STRAP) NOT REQUIRED WHEN UX800 IS USED WITH EARLY STYLE (BEFORE UCC-3 WIRING CHANGED TO ACCOMMODATE UX801 FACILITIES) UCC-3 CALL CONTROL UNITS WITHOUT WIRES IN POSITION 12 AND 13 OF MATING CALL CONTROL RECEPTACLE CONNECTOR NO. 6.
12.	SEE PRINTER 7884WD FOR MODIFICATION TO UP801, 803 PRINTER ASSEMBLIES TO PROVIDE AUTOMATIC READER CONTROL OPTIONS.
13.	WIRING STATUS: RECTANGULAR BOX INDICATES HISTORY OF WIRING CHANGES. 00-B / NOTE NUMBER / 00-A. B - DENOTES WIRING BEFORE THE CHANGE DESCRIBED BY THE DESIGNATED NOTE ENTERED THE PRODUCT. A - DENOTES WIRING AFTER THE CHANGE DESCRIBED BY THE DESIGNATED NOTE ENTERED THE PRODUCT.
14.	ASSOCIATED WITH THE UX-805 ONLY.
15.	THERE WIRES DO NOT APPEAR ON UX-805
16.	AUTOMATIC READER UX-805 186340 CABLE ASSEMBLY.
17.	279M - 48VAC - 110 Ω; 300M - 115VAC - 780 Ω

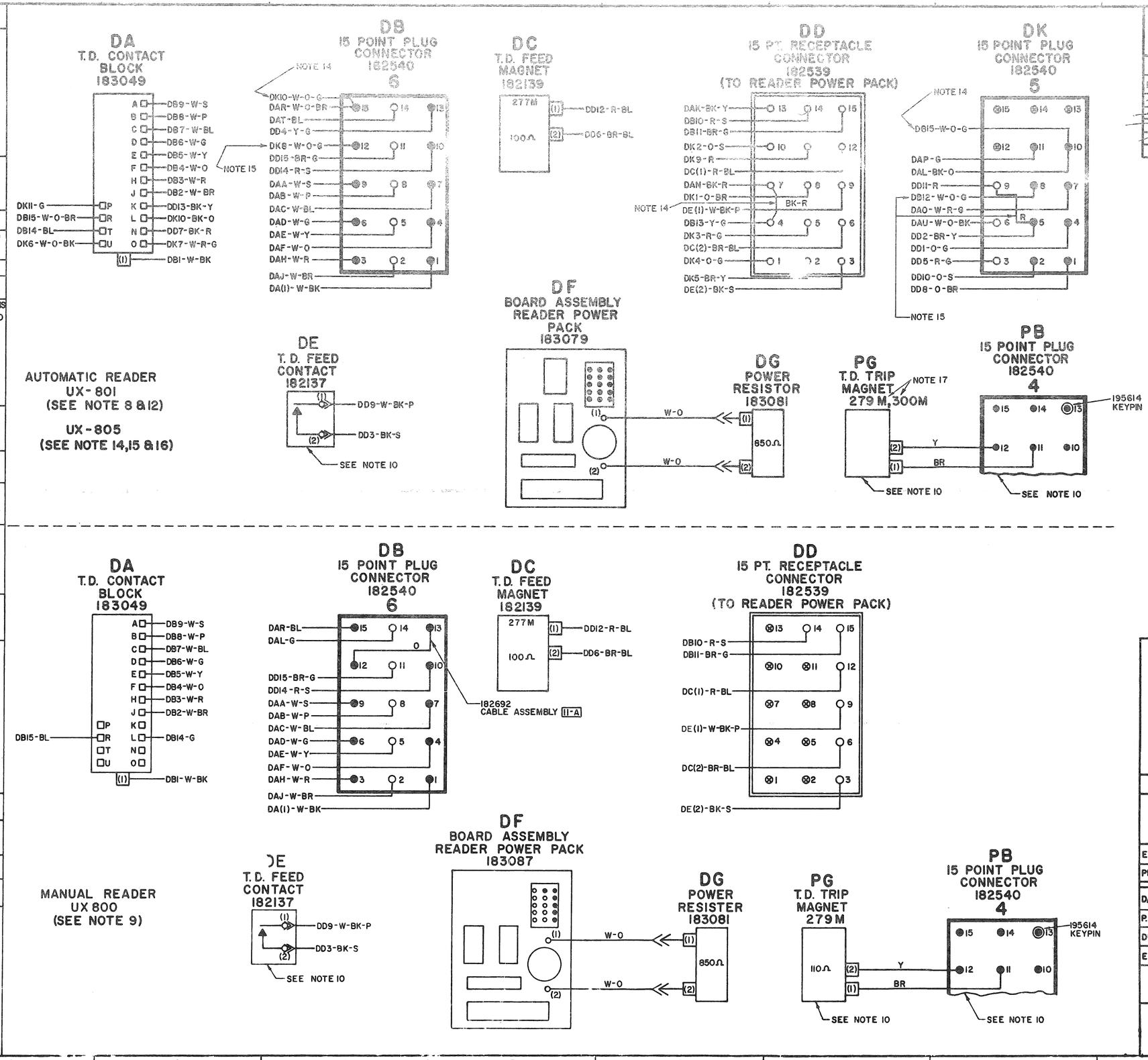

7887 WD

REVISIONS		
ISSUE	DATE	AUTH. NO.
1	4-25-66	17470-R
2	11-3-66	92300 RC
3	1-31-68	95171
4	1-12-72	4853-RC

WDP

ACTUAL WIRING DIAGRAM FOR MODEL 33 8 LEVEL MANUAL OR AUTOMATIC TRANSMITTER DISTRIBUTOR (TAPE READER)
UX-800-MANUAL READER
UX-801-AUTOMATIC READER
UX-805-AUTOMATIC READER

APPROVALS	
D AND R	E OF M
E-NUMBER	
PROD. NO. 7887 WD	
DATE 8-3-65	
P.D. FILE NO. G-A152 AA	
DRAWN R.H.B.	CHKD.
ENGD. J.W.S.	APPD.

TELETYPE CORPORATION

7887 WD

TC 434 (8-69)

NO	NOTES
1	MASTER ARTWORK NO. 181821AW FOR PRINTING SCREEN IS AVAILABLE IN R&D OFFICE SERVICE SECTION.
2	RAISE R2, 5, 6, 7, 8 - 1/32 TO 1/16" ABOVE CIRCUIT CARD.
3	TO FACILITATE MANUFACTURE THE COMPONENT LAYOUT WAS CHANGED INCLUDING R1 AND CR5 WHICH WAS CHANGED FROM VERTICAL MOUNTING AND THE ADDITION OF 336470 STRAP.

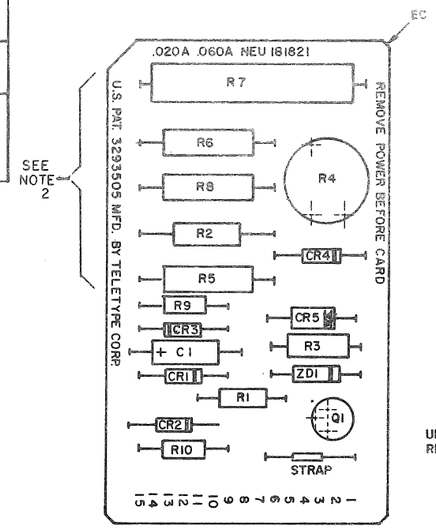

CIRCUIT DESCRIPTION

THE SELECTOR MAGNET DRIVER CIRCUIT IS POWERED FROM A SOURCE OF 117 VOLT ALTERNATING CURRENT THROUGH A STEP DOWN ISOLATION TRANSFORMER. DIODES CR1 AND CR2 PROVIDE FULL WAVE RECTIFICATION OF THE REDUCED VOLTAGE TO 20 VOLTS DC AT TERMINAL 15. THE CIRCUIT COMMON IS CONNECTED TO TERMINAL 2 AND A POWER SUPPLY FILTER CAPACITOR IS CONNECTED BETWEEN TERMINALS 2 AND 15.

THE DIRECT CURRENT SIGNAL LINE CIRCUIT IS CONNECTED THROUGH TERMINALS 14 OR 8 AND 2 DEPENDING ON LINE CURRENT. TERMINAL 7 STRAPPED EXTERNALLY TO TERMINAL 14 OR 8, DEPENDING ON LINE CURRENT.

IN THE MARKING CONDITION, Q1 IS OFF-BIASED. WITH Q1 OFF, THE BASE OF Q2 WILL BE CLAMPED AT THE ZENER REFERENCE VOLTAGE BY DIODE CR4. THIS VOLTAGE CLAMP IS THEN TRANSLATED TO CURRENT REGULATION BY THE TRANSISTOR ACTION OF Q2. THE REGULATED MAGNET CURRENT IS ADJUSTED TO .500 AMPERES BY RHEOSTAT R4.

WITH THE SIGNAL LINE IN THE OPEN OR SPACING CONDITION, Q1 IS TURNED ON BY BASE CURRENT SUPPLIED THROUGH RESISTOR R1 OR R10. THE POTENTIAL AT THE COLLECTOR OF Q1 WILL BE NEAR ZERO OFF-BIASING Q2. WITH Q2 OFF, NO SELECTOR MAGNET CURRENT FLOWS, ALLOWING THE MAGNET TO RELEASE. DURING THE TURN OFF OF Q2, THE INDUCTIVE TRANSIENT DEVELOPED AT THE COLLECTOR IS SUPPRESSED BY THE NETWORK CONSISTING OF CR3, R9 AND C1.

"SNAP-ACTION" IS SUPPLIED TO THE CIRCUIT TRANSITIONS BY FEEDBACK IN THE EMITTER CIRCUIT OF TRANSISTOR Q1.

UL RECOGNITION SYMBOL REQUIRED PER MR 2001.

CONSTANT CURRENT .500 AMP SELECTOR MAGNET DRIVER

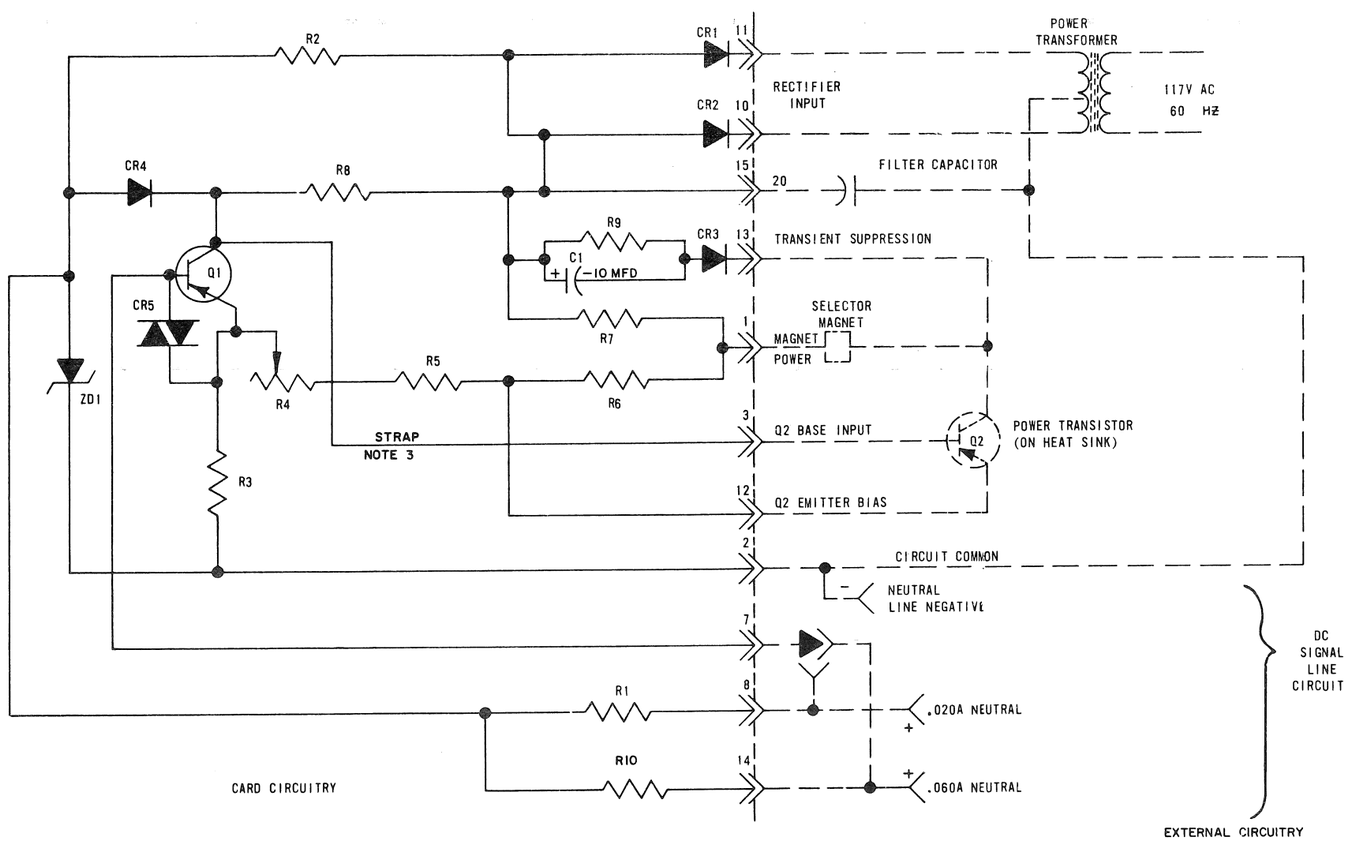

CIRCUIT BOARD EC

REF. DESIG.	TELETYPE PART NO	TOTAL QTY.	NAME AND DESCRIPTION	LOCATING FUNCTION
R1	182779	1	RESISTOR 420 OHMS 1 2W	010 AMP SWITCHING
				FOR 020A NEUTRAL
				LINE
R10	182797	1	RESISTOR 135 OHMS 1 2W	030 AMP SWITCHING
				FOR 060A NEUTRAL
				LINE
R2	181669	1	RESISTOR 330 OHMS 2 5W	ZENER CURRENT
				LIMITING
R3	182778	1	RESISTOR 0.82 OHMS 1 2W	COMMON EMITTER BIAS
R4	182773	1	RHEOSTAT 3 OHMS 2 5W	OUTPUT CURRENT
				ADJUST
R5	181717	1	RESISTOR 8 OHMS 5W	Q2 EMITTER BIAS
R6	182770	1	RESISTOR 270 OHMS 4 W	Q2 EMITTER BIAS
R7	182772	1	RESISTOR 14 OHMS 10W	Q2 COLLECTOR LOAD
R8	182627	1	RESISTOR 390 OHMS 4W	Q1 COLLECTOR LOAD
R9	182776	1	RESISTOR 150 OHMS 1.2W	Q2 COLLECTOR —
				TRANSIENT LIMITING
CR1	182520	2	DIODE 1N3193	POWER RECTIFIER
CR2	182520		SAME AS CR1	POWER RECTIFIER
CR3	181619	2	DIODE 1N482	COLLECTOR TRANSIENT
				LIMITING
CR4	181619		SAME AS CR3	VOLTAGE CLAMPING
CR5	178844	1	VARISTOR 100A	INPUT PROTECTION
ZD1	182774	1	DIODE, ZENER 4.7V 5% 1W	REFERENCE
C1	182628	1	CAPACITOR, 10 MFD 25W VDC	COLLECTOR TRANSIENT
				LIMITING
Q1	181671	1	TRANSISTOR, HIGH GAIN	INPUT SWITCH
	336470	**1**	**STRAP**	**NOTE 3**
EC	181823	1	CIRCUIT BOARD, ETCHED	

181821

REVISIONS

ISSUE	DATE	AUTH. NO.
2	4-19-65	86501
3	9-19-66	88816
4	11-25-66	88816-1
5	5-5-67	93502
6	4-2-68	95450
7	7-5-68	95948
8	11-6-68	96521
9	12-20-68	98266
10	3-3-71	2320
11	3-29-72	236
12	3-29-72	236-1

WDP

APPROVALS

R AND D	E OF M
H.J.K.	

E-NUMBER

PROD NO 181821

DATE 7-20-63 4-28-67

R&D FILE 2-30152/153AA

DRAWN JER-CG | CHKD. NAJ

ENGD. AS-PRS | APPD. JW

TELETYPE CORPORATION

181821

TC 637(1-67)

REF. DESIG.	PART NO. REQ.	QTY.	DESCRIPTION	FUNCTION
R1	183083	1	RESISTOR, 22 OHM	SURGE LIMITER
R2	183082	1	RESISTOR, 12,000 OHM	ARC SUPPRESSOR
R3	118198	1	RESISTOR, 56,000 OHM	BLEEDER
R4	118180	1	RESISTOR, 10,000 OHM	ARC SUPPRESSOR
R5	144464	1	RESISTOR, 220 OHM (NOTE 4)	VOLTAGE DROPPING
C1	183078	1	CAPACITOR, DUAL SECTION	
			A - 200 MFD, 200V DC	POWER SUPPLY FILTER
			B - 9 MFD, 200V DC	SURGE SOURCE
C2	183084	1	CAPACITOR, .22 MFD	ARC SUPPRESSOR
C3	183121	1	CAPACITOR, 15 MFD	FILTER
CR1	181654	6	DIODE, 400V	POWER SUPPLY RECTIFIER
CR2			SAME AS CR1	POWER SUPPLY RECTIFIER
CR3			SAME AS CR1	POWER SUPPLY RECTIFIER
CR4			SAME AS CR1	POWER SUPPLY RECTIFIER
CR5	181654		SAME AS CR1	ARC SUPPRESSOR
CR6	181654		SAME AS CR1	RECTIFIER
F1	143630	1	FUSE, 3/4 A.F.B.	POWER SUPPLY PROTECTION (SEE NOTE 2)
FC	171595	2	FUSE CLIP	
T1	183085	2	TERMINAL WITH WIRE LEAD	
T2			SAME AS T1	
J1	182540	1	CONTACT BLOCK, 15 POINT	
E	182641	15	TERMINAL, MALE P.C.	
EC	183137	1	ETCHED CIRCUIT BOARD	
RYL.1	183088	1	RELAY, 2, 100 OHM	AUTOMATIC READER CONTROL
	151637	2	SCREW, 4-40 FIL. HEAD	
	110743	2	LOCKWASHER, 4-40	
	151880	2	NUT	

SIMILAR TO:

NO.	NOTES
1.	MASTER ARTWORK NO.: 183079AW FOR PRINTED SCREENING AVAILABLE IN R&D OFFICE SERVICE SECTION.
2.	SOME PREVIOUS CIRCUIT CARD ASSEM. USED 1/2 AFB. 3/4 AFB. IS PREFERABLE.
3.	COMPONENT LAYOUT WAS CHANGED TO ALLOW FOR NEW STYLE CAPACITOR WITH VENT.
4.	R5 CHANGED FROM 470 OHM 2W, TO 220 OHM, 1 WATT ON ASSEM. LATER THAN ISSUE 12. CARD ASSEM. ISSUE 13 AND HIGHER ARE SUITABLE FOR ALL APPLICATIONS. CARD ASSEM. LOWER THAN ISSUE 13 PROVIDE LESS OPERATING MARGIN WHEN USED IN MODEL 38 SETS OR IN MODEL 33 SETS WITH INTEGRAL DATA SETS.

CIRCUIT DESCRIPTION

THIS POWER PACK CONSISTS OF A 150 VOLT POWER SUPPLY OPERATING DIRECTLY FROM THE 117V AC LINE, A WAVE SHAPING NETWORK, AND AN ARC SUPPRESSOR. IT IS DESIGNED TO OPERATE WITH AN INDUCTIVE LOAD OF APPROXIMATELY 100 OHMS BETWEEN TERMINALS 6 AND 12, WITH A 850 OHM, 40 WATT RESISTOR CONNECTED BETWEEN T1 AND T2.

TD FEED SWITCH IS CONNECTED BETWEEN TERMINALS 9 AND 3. THE UNIT IS DESIGNED TO DRIVE THE READER MAGNET IN THE MODEL 33 ASR SET.

TDC RELAY CONTACTS ARE USED FOR AUTOMATIC READER CONTROL. 48V AC INPUT IS RECTIFIED THRU R5 AND CR6 BEFORE REACHING TDC RELAY. CAPACITOR C3 FILTERS TO GROUND THRU COMMON POINT OF TDC1.

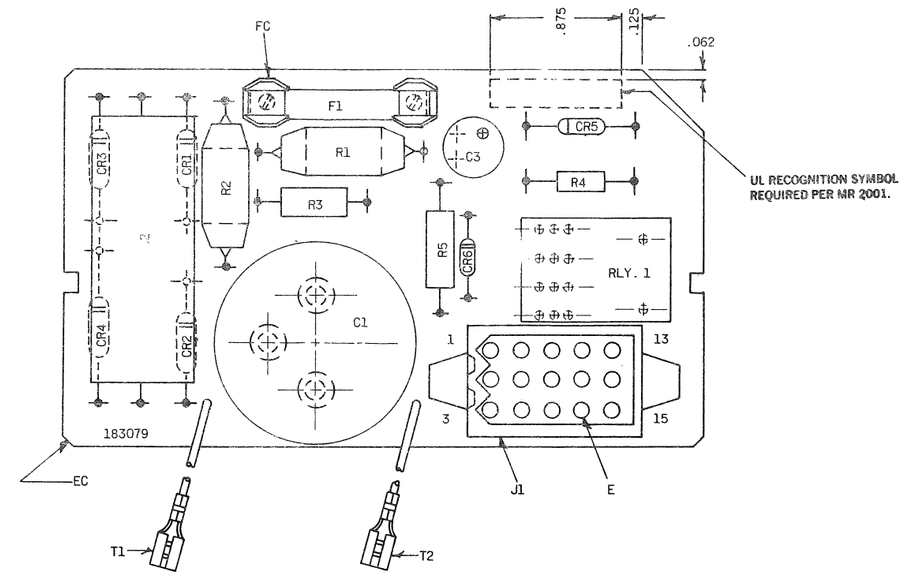

POWER PACK ASSEMBLY W/RELAY

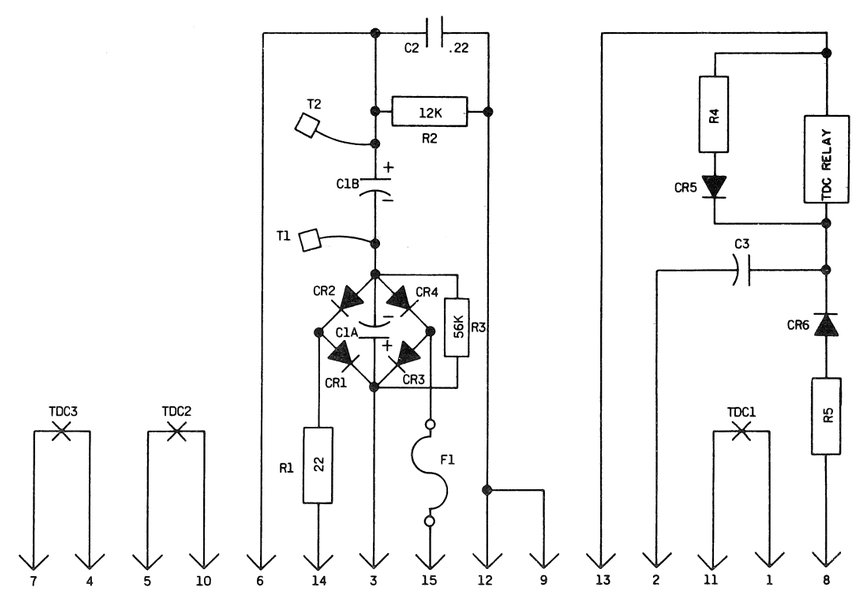

REVISIONS		
ISSUE	DATE	AUTH NO.
13	1-13-72	4350

CIRCUIT CARD
EC 183079
POWER PACK ASSEMBLY
W/RELAY

APPROVALS		
PROJ. SUPV.	PROJ. DIR.	MFG. REL. COMPL.
ENGR. T.Y.	DSGNR.	
DRN. F.R.	DATE 8-4-72	
E-NUMBER		
SD-CD NO.		
R&D FILE 1-47.60.AA		

TELETYPE

183079

ALL DIMENSIONS ± UNLESS OTHERWISE SPECIFIED.

UL RECOGNITION SYMBOL REQUIRED PER MR 2001.

CIRCUIT CARD ASSEMBLY

POWER PACK ASSEMBLY

NO B/M

183087

PARTS REQ	NO REQ	USED ON	NO REQ
SEE BELOW		182134	1

NO.	NOTES
1.	MASTER ARTWORK 183087AW FOR PRINTED SCREENING AVAILABLE IN R&D OFFICE SERVICE SECTION.
2	SOME PREVIOUS CIRCUIT CARD ASSEMBLY USED 1/2 AFB. 3/4 AFB IS PREFERABLE.
3	ON ISSUE 10, BOARD NUMBER WAS 183080.

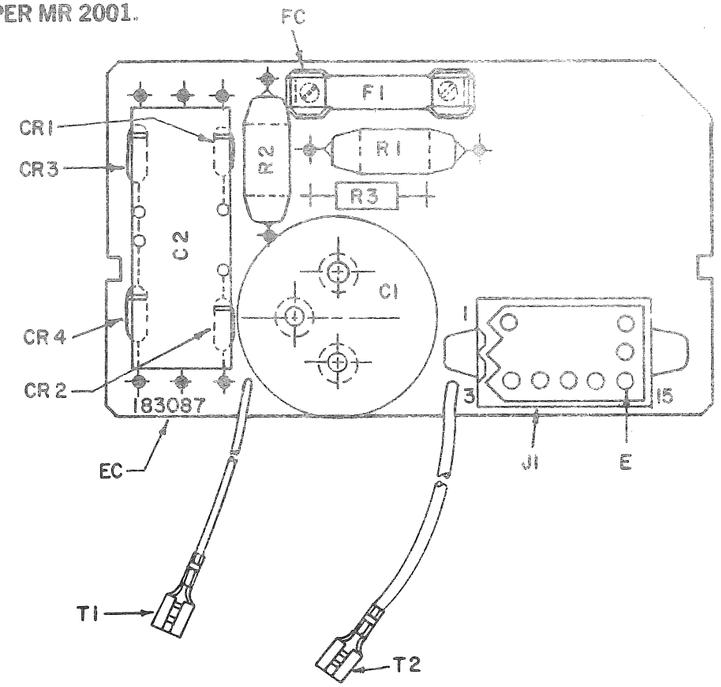

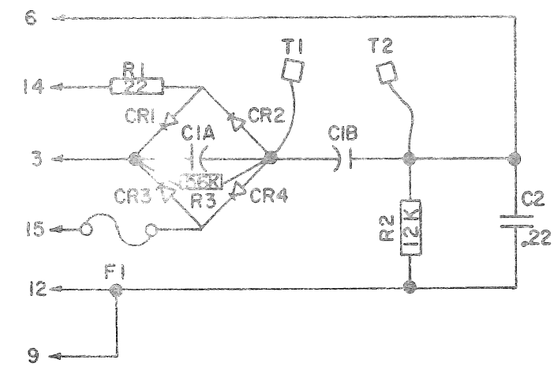

DESIGNATION	TELETYPE PART NO.	TOTAL QTY.	DESCRIPTION	FUNCTION
R1	183083	1	RESISTOR, 22 OHM	SURGE LIMITER
R2	183082	1	RESISTOR, 12,000 OHM	ARC SUPRESSOR
C1	183078	1	CAPACITOR, DUAL SELECTION	
			A-200 M.F.D. 200 V.D.C.	POWER SUPPLY FILTER
			B-9 M.F.D. 200 V.D.C.	SURGE SOURCE
C2	183084	1	CAPACITOR, .22 M.F.D.	ARC SUPRESSOR
CR1	181654	4	DIODE, 400 V.	POWER SUPPLY RECTIFIER
CR2			" "	" " "
CR3			" "	" " "
CR4			" "	" " "
F1	143630	1	FUSE, 3/4 A. F.B.	POWER SUPPLY PROTECTION SEE NOTE 2.
FC	171595	2	FUSE CLIP	
T1	183085	2	TERMINAL WITH WIRE LEAD	
T2			" " " "	
J1	182540	1	CONTACT BLOCK, 15 POINT	
E	182641	8	TERMINALS MALE P.C.	
EC	183137	1	ETCHED CIRCUIT BOARD	NOTE 3
	151637	2	SCREW 4-40 FIL HEAD	
	110743	2	LOCK WASHER #4	
	151880	2	NUT	
R3	118198	1	RESISTOR, 56,000 OHM	BLEEDER

THIS POWER PACK CONSISTS OF A 150 VOLT POWER SUPPLY OPERATING DIRECTLY FROM THE 117 VAC LINE. A WAVE SHAPING NETWORK AND AN ARC SUPRESSOR. IT IS DESIGNED TO OPERATE WITH AN INDUCTIVE LOAD OF APPROXIMATELY 100 OHMS BETWEEN TERMINALS 6 AND 12. WITH A 850 OHM 40 WATT RESISTOR CONNECTED BETWEEN T1 AND T2.

AN ON-OFF CONTROL SWITCH IS CONNECTED BETWEEN TERMINALS 9 AND 3. THE UNIT IS DESIGNED TO DRIVE THE READER MAGNET IN THE MODEL 32 AND 33 ASR.

REVISIONS

ISSUE NO.	DATE	AUTHOR NO
2	8-20-62	30-1276
3	9-26-62	30-1315
4	2-20-63	30-5537
5	6-26-63	76290
6	9-19-66	88816
7	11-25-66	88816-1
8	8-22-68	95993
9	9-17-69	99187
10	2-10-70	99187-2
11	3-3-71	2320
12	1-20-72	564-2
13	12-18-72	6803

WDP

APPROVALS

D AND R	E OF M

E. NUMBER

PROD. NO. 183087

SCALE: 1/1

STOCK SPECIFICATION

SIZE	KIND	SHAPE	TEMPER

DRAWN	PD FILE NO	DATE
T.R.	1-47.60 AA	6-7-62

DESIGNED	ENGINEER	CHECKED	APPROVED
	J.A.J.	AAH	BMB

TELETYPE CORPORATION

183087

ET108144 TC257(6-64)