digital EQUIPMENT CORPORATION MAYNARD MASSACHUSETTS

DRAWING DIRECTORY

CUSTOMER PRINT SET INDEX

SEQUENCE	
DRAWING DIRECTORY	B-DD-H960-D (SHEET ONE ONLY)
DRAWING DIRECTORY	B-DD-BA11-F
DRAWING DIRECTORY	B-DD-861-Ø
DRAWING DIRECTORY	B-DC-H7420-0
DRAWING DIRECTORY	B-DD-H744-Ø
DRAWING DIRECTORY	B-DD-H745-Ø
CIRCUIT SCHMATIC	E-CS-H754-0-1
EXPANDER BOX POWER HARNESS	D-IC-7009566-0-1
EXPANDER POWER HARNESS (OLD)	D-IC-7008754-0-3
6 PIN JUMPER HARNESS	D-IA-7009573-0-0
G772 SYS. UNIT PWR HARNESS	D-IA-7009562-0-0
EXPANDER BOX PWR HARNESS	E-IA-7009566-0-0

THIS IS PRINT SET

UNIT VARIATIONS

VARIATION	TITLE	PRINT SET TYPE H960-D
H960-DA	CABINET ASSY (115 V)	X
H960-DB	CABINET ASSY (230V)	X
H960-DH	CABINET ASSY (115V)	X
H960-DJ	CABINET ASSY (230V)	X

REVISIONS

DATE	CHG. NO.	REV
8/72	H960-3	A
10-3-72	MISC-94	B
9/72	H960-6	C
3/73	H960D-1	D
1/73	H960D-2	E
[illegible]	H960D-3	F
3-74	H960D-4	H
7-74	H960D-5	J
11-74	H960D-6	K
3-75	H960D-7	L
7-75	H960D-8	M
3-76	H960D-9	N

USED ON OPTION/MODEL: 11/45

DRN. K.DAVIS	DATE 4/5/72	TITLE	CABINET ASSY
CHK'D. R.COOK	DATE 4/12/72		
PROJ ENG. [illegible]	DATE 4/12/72		
PROD. [illegible]	DATE 5-1-72	SIZE B	CODE DD
FIELD SERV. [illegible]	DATE 5/1/72	NUMBER H960-D	REV N
SHEET 1 OF 4		DIST	

DRB 106

DEC 16—(329)—1062—1—N871

digital EQUIPMENT CORPORATION MAYNARD MASSACHUSETTS

DRAWING DIRECTORY

CUSTOMER PRINT SET INDEX

SEQUENCE	
DRAWING DIRECTORY	B-DD-BA11-F
BA11-F ACCESSORY ARRANGEMENT	D-AR-BA11-F-Ø1
CIRCUTT SCHEMATIC	D-CS-5410590-0-1
MTG. BOX ASSY.	E-UA-BA11-F-Ø
MTG. BOX ASSY. (PL)	A-PL-BA11-F-Ø

SEQUENCE

THIS IS PRINT SET

UNIT VARIATIONS

VAR	TITLE	PRINT SET 1
BA11-FA	MOUNTING BOX ASSY (BASIC)	X
BA11-FB	MOUNTING BOX ASSY (EXP)	X
BA11-FC	MOUNTING BOX ASSY (11/40).	X
BA11-FD	FIELD EXPANSION BOX ASSY 115V	X
BA11-FE	FIELD EXPANSION BOX ASSY 230V	X
BA11-FH	FIELD EXPANSION BA11-FD w/+20VDC REG.	X
BA11-FJ	FIELD EXPANSION BA11-FE w/+20VDC REG.	X
BA11-FK	MOUNTING BOX ASSY (11/70)	X

REVISIONS		
DATE	CHG. NO.	REV
	BA11F-23	W
REVISED & REDRAWN		
3-75	11/45-60	Y
5-75	BA11F-24	Z
6-75	BA11F-25	AA
7-75	BA11F-26	AB
3-76	BA11F-27	AC
5-76	BA11F-28	AD
12-77	BA11F-30	AE

DEC 16-13251-1-1062-1A-9972

USED ON OPTION/MODEL	
11/45	
11/40	

SHEET 1 OF 4

DRN. B. BLODGETT	DATE 9/23/74	TITLE MOUNTING BOX ASSY.	
CHK'D. D. HEALY	DATE 9/25/74		
PROJ ENG. W. E. Bain	DATE 12/10/74		
PROD. J. Borenstein	DATE 12/10/74	SIZE B / CODE DD	NUMBER BA11-F-0 / REV AE
FIELD SERV. D. [illegible]	DATE 12/10/74	DIST	

DRB 106

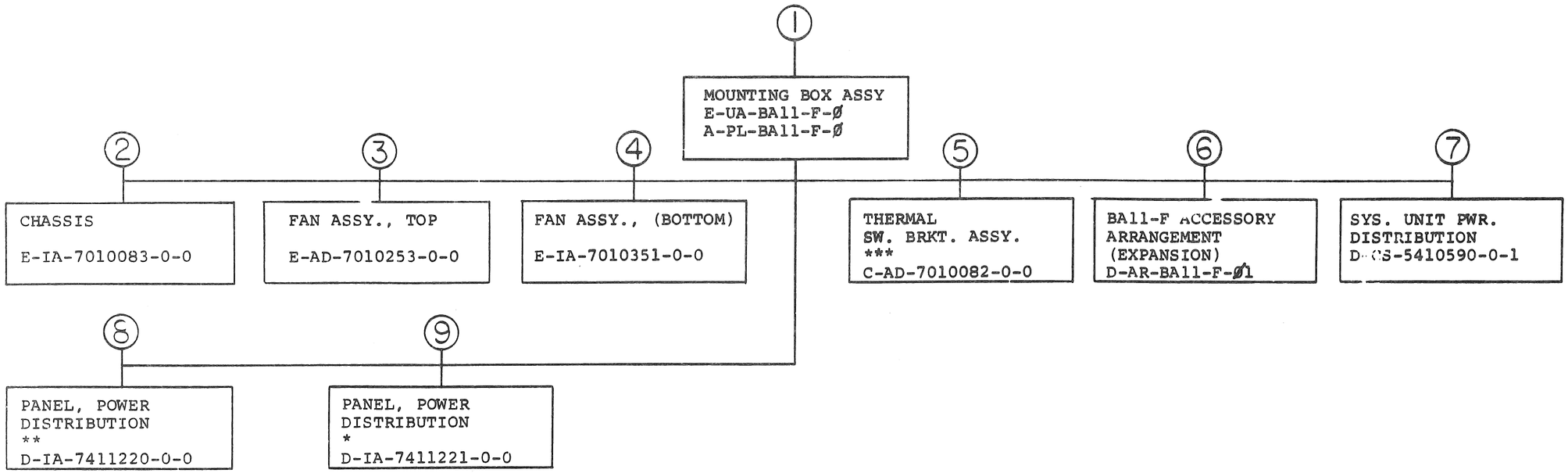

* FA ONLY
** ALL EXCEPT FA AND FK
*** FA AND FK ONLY

TITLE		SIZE	CODE	NUMBER	RF
MOUNTING BOX ASSY.	SHEET 2 OF 4	B	DD	BA11-F-0	AE

ELECTRICAL

CUSTOMER PRINT SET 1	MFG. SET	FIND NO.	DRAWING NO.	REV	NO OF SHT	DESCRIPTION	OPTION NO./FILE DATE
X		1	E-UA-BA11-F-Ø	AF	2	MOUNTING BOX ASSY.	
X			A-PL-BA11-F-Ø	AF	2	MOUNTING BOX ASSY. (PL)	
		3	E-IA-7010253-0-0		1	FAN ASSY. (TOP)	
		4	E-IA-7010351-0-0		1	FAN ASSY. (BOTTOM)	
		5	C-AD-7010082-0-0		1	THERMAL SWITCH BRKT. ASSY.	
X		6	D-AR-BA11-F-Ø1	C	2	BA11-F ACCESSORY ARRANGEMENT	
X		7	D-CS-5410590-0-1	*	1	CIRCUIT SCHEMATIC	

CUSTOMER PRINT SET	MFG SET	FIND NO.	DRAWING NO.	REV	NO OF SHT	DESCRIPTION	OPTION NO / FILE DATE

CUSTOMER PRINT SET CODES
X = PRINT OF DOCUMENT INCLUDED IN PRINT SET
C = INCLUDES ALL PRINTS INDICATED ON DOCUMENT
S = CONFIDENTIAL AUTHORIZED SIGNATURE REQUIRED

TITLE		SIZE	CODE	NUMBER	REV
MOUNTING BOX ASSY.	SHEET 3 OF 4	B	DD	BA11-F	AE

DPB 108

DEC 16-(325)-1062-2B-A972

CUSTOMER PRINT SET 1	MFG. SET	FIND NO.	DRAWING NO.	REV	NO OF SHT	DESCRIPTION	OPTION NO./FILE DATE
			MECHANICAL				
		1	E-UA-BA11-F-Ø	A:F	2	MOUNTING BOX ASSY.	
			A-PL-BA11-F-Ø	A:F	2	MOUNTING BOX ASSY. (PL)	
			E-IA-7409272-0-0		1	BRKT. BEZEL MTG. (FA & FC ONLY)	
			B-MD-7412297-0-0		1	TROUGH, SUPPORT (CHASSIS)	
			E-MD-7412587-0-0		1	COVER, TROUGH SUPPORT	
			E-MD-7412585-0-0		1	COVER, LEFT SIDE	
			A-DC-5309413-0-0		1	DECAL, NFPA TYPE (UL)	
			A-DC-5309414-0-0		1	DECAL, EDP EQUIP. (UL)	
			A-DC-7411325-0-0		1	DECAL, MECHANICAL STATUS	
			C-MD-7411363-0-0		1	KNUCKLE GUARD (EXCEPT FA)	
			B-MD-7411364-0-0		1	KNUCKLE GUARD (FA ONLY)	
			A-DC-7411324-0-0		1	EXPANDER BOX DECAL	
			C-MD-7413130 0-0		1	CLAMP, CABLE	
			C-MD-7413106-0-0		1	CLAMP, CABLE	
			C-MD-7413107-0-0		1	BAR, CABLE	
			C-MD-7413108-0-0		1	U BOLT, CABLE	
			B-IA-7011033-0-0		1	CLAMP UNIBUS CABLE ASSY	
		2	E-IA-7010083-0-0		1	CHASSIS	
			E-IA-7412291-0-0		1	PLATE BACK, CHASSIS	
			E-IA-7412290-0-0		1	PLATE FRONT, CHASSIS	
			E-IA-7412295-0-0		1	SYS. UNIT SUPP.,TOP, CHASSIS	
			E-MD-7412586-0-0		1	SYS. UNIT SUPP.,BOT., CHASSIS	
			E-IA-7412294-0-0		1	MTG. BRKT., LEFT, CHASSIS	
			C-MD-7412293-0-0		1	MTG. BRKT., RIGHT, CHASSIS	
		3	E-IA-7010253-0-0		1	FAN ASSY, TOP	
			E-MD-7412296-0-0		1	BRKT, FAN MTG. TOP	
		4	E-IA-7010351-0-0		1	FAN ASSY , BOTTOM	
			E-MD-7412588-0-0			BRKT. BOTTOM FAN MTG.	

CUSTOMER PRINT SET 1	MFG SET	FIND NO.	DRAWING NO.	REV	NO OF SHT	DESCRIPTION	OPTION NO./FILE DATE
			MECHANICAL				
		5	C-AD-7010082-0-0		1	THERMAL SW. BRKT. ASSY. (FA ONLY)	
			C-MD-7412292-0-0		1	BRKT., THERMAL SW. (FA ONLY)	
		6	D-AR-BA11-F-Ø1		2	BA11-F ACCESSORY ARRANGEMENT (EXPANSION)	
		7	D-CS-5410590-0-1		1	SYSTEM UNIT PWR. DISTRIBUTION	
			K-CO-5410590-Ø-4			X-Y COORDINATE HOLE LOCATION	
			E-AH-5410590-Ø-5			ASSY./DRILLING HOLE LAYOUT	
			B-MH-5410590-Ø-6			MODULE ECO HISTORY	
			5010589		REF	ETCHED CIRCUIT BOARD	
			C-MD-9606076-0-0		REF	ALLIGNMENT FIXTURE	
		8	D-IA-7411220-0-0		1	PANEL, PQR. DISTRIB. (ALL EXCEPT FA)	
			C-SS-7411220-0-1		1	SILK SCREEN	
		9	D-IA-7411221-0-0		1	PANEL, PWR. DISTRIB. (FA ONLY)	
			A-SS-7411221-0-1		1	SILK SCREEN	

CUSTOMER PRINT SET CODES
X = PRINT OF DOCUMENT INCLUDED IN PRINT SET
C = INCLUDES ALL PRINTS INDICATED ON DOCUMENT
S = CONFIDENTIAL AUTHORIZED SIGNATURE REQUIRED

TITLE		SIZE	CODE	NUMBER	REV
MOUNTING BOX ASSY.	SHEET 4 OF 4	B	DD	BA11-F	AE

DPB 108

DEC 16-(325)-1062-2B-R972

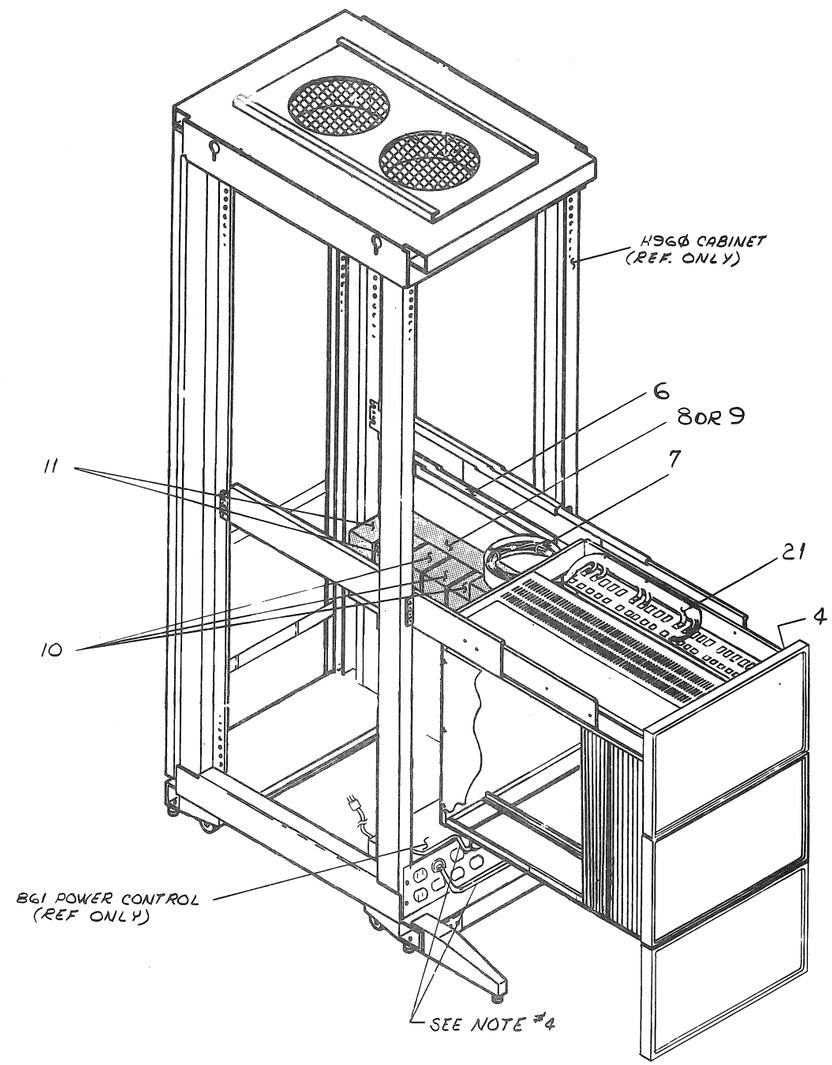

NOTES:

1. A.C. CONNECTION FOR CABINET FAN MAY BE ON BRACKET OR ON JONES STRIP ON INTERIOR OF REAR SIDE OF CABINET MOUNTING CHANNEL.
2. BEHIND EACH 10 1/2" BLANK PANEL INSTALL (4) 3/8" SPACERS.
3. OLDER SYSTEMS USED ITEMS 1,3 & 12 FOR POWER DISTRIBUTION, THESE PARTS ARE AVAILABLE FOR REFERANCE OR REPAIR PURPOSES
4. H742 POWER SUPPLY AND TOP OF CABINET FANS MUST BE PLUGED INTO LINE 1 ON BG1 POWER CONTROL.
5. MAIN HARNESS (ITEM #21) HAS TWO (2) UNUSED 8-PIN PLUGS (P16 OR P16 AND P15 OR P17). TO PREVENT DAMAGE TO REGULATORS, INSERT AN EMPTY MATING CONNECTOR (ITEM #24) INTO THEM AND TIE THEM OUT OF THE WAY. ALSO ADD OR REMOVE JUMPERS PER D-IC-7009566-0-1.

BAII-FJ	BAII-FH	BAII-FE	BAII-FD	BAII-FC	BAII-FB	BAII-FA	DESCRIPTION	PART NO.	ITEM NO.
1	1	–	–	–	–	–	+20V REGULATOR	E-UA-H754-0-0	25
2	2	2	2	–	–	–	8-PIN MATE-N-LOCK (FEMALE)	1209340-0	24
18	8	18	18	–	–	–	ADHESIVE BACKED MOUNT	9008264	23
–	–	–	–	–	9	3	OPTION CABLE G772	7009562-0-0	22
1	1	1	1	–	–	–	BAII-F PWR. HARNESS	7009566-0-0	21
6	3	6	3	–	–	–	NUT TINNERMAN	9007786	20
6	3	6	3	–	–	–	LOCK WASHER, EXT TOOTH #10	9007651	19
6	3	6	3	–	–	–	SCR PHL HD PAN #10-32 x 5/8 LG	9006074-1	18
4	4	4	4	–	–	–	NUT KEPS #10-32	9006565	17
4	4	4	4	–	–	–	SCR PHL HD PAN #10-32 x 1/2 LG	9006073-1	16
4	4	4	4	–	–	–	NUT, KEPS #8-32	9006563	15
4	4	4	4	–	–	–	SCR, PHL HD PAN #8-32 x 3/8 LG	9006037-1	14
1	1	1	1	–	–	–	REGULATOR BOARD (PS)	5409730-0-0	13
–	–	1	1	–	–	–	~~POWER HARNESS (EXP)~~	~~7008754-0-0~~	~~12~~
1	1	2	2	–	–	–	-15V REGULATOR	E-UA-H745-0-0	11
3	3	3	3	–	–	–	+5V REGULATOR	E-UA-H744-0-0	10
1	–	1	–	–	–	–	POWER SUPPLY H742-B	E-UA-H742-B-0	9
–	1	–	1	–	–	–	POWER SUPPLY H742-A	E-UA-H742-A-0	8
1	1	1	1	–	–	–	SUPPORT HARNESS	D-IA-7409446-0-0	7
1	1	1	1	–	–	–	BRKT, HARNESS SUPPORT	D-MD-7409445-00	6
1	1	1	1	–	–	–	PLATE SUPPORT	B-MD-7409447-00	5
2	2	2	2	–	–	–	MTG BRKT 10 1/2 PANEL	D-IA-7409718-0-0	4
–	–	–	–	–	–	3	~~POWER CABLE~~	~~7008855-18~~	~~3~~
33	33	33	33	–	–	–	TIE WRAP	9007880	2
–	–	–	–	–	9	–	~~POWER CABLE~~	~~7008800-0-0~~	~~1~~

QTY/VARIATION

FIRST USED ON SYSTEM: PDP11/45

ACCESSORY LIST

UNLESS OTHERWISE SPECIFIED DIMENSION IN INCHES. TOLERANCES
DECIMALS .XXX = .005, .XX = .02, .X = .1
ANGLES ±0° 30'
REMOVE BURRS AND BREAK SHARP CORNERS SURFACE QUALITY ✓
MATERIAL —"—
FINISH —"—

DRN. — DATE
CHK'D. L. GILBERT DATE 11-9-72
ENG. I. MORRIS DATE 11-9-72
PROJ. ENG. I. MORRIS DATE 11-9-72
PROD. J. SWANSON DATE 11-27-72
NEXT HIGHER ASSY. E-UA-BAII-F-0
SCALE —"—
SHEET 1 OF 2

DIGITAL EQUIPMENT CORPORATION
MAYNARD, MASSACHUSETTS

TITLE
BAII-F
ACCESSORY
ARRANGEMENT

SIZE D CODE AR NUMBER BAII-F-01 REV C

DIST.

REVISIONS

CHK	CHANGE NO.	REV
	REDRAWN	

OLD NUMBER WAS A-AL-BAII-F-01

11-7-72	BAII F-00015	B
	V. BOAEN	
11-7-72	BAIIF-00326	C
	MINCK	

DEC FORM NO DRD 100-A

NOTE:
1. THIS PRINT SHOWS HARNESS ARRANGMENTS FOR BAII-FD & FE ONLY.
2. OPTION BACKPLANES AND HARNESSES REPRESENT TYPICAL INSTALLATION.

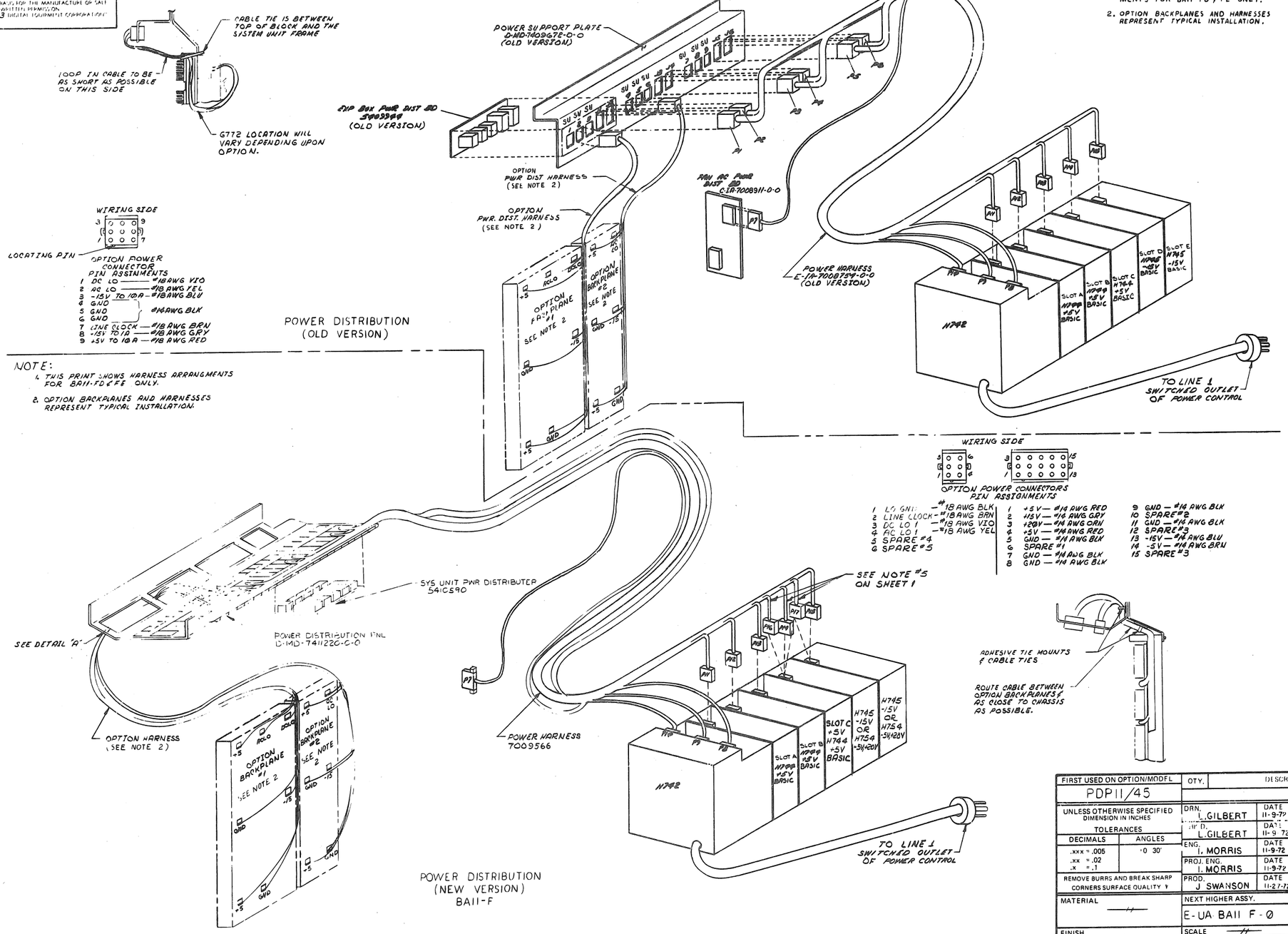

FIRST USED ON OPTION/MODEL	QTY.	DESCRIPTION	PART NO.	ITEM NO.
PDP11/45		PARTS LIST		

UNLESS OTHERWISE SPECIFIED DIMENSION IN INCHES
TOLERANCES
DECIMALS: .xxx = .005, .xx = .02, .x = .1
ANGLES: ±0 30'
REMOVE BURRS AND BREAK SHARP CORNERS SURFACE QUALITY ▽

MATERIAL —//—
FINISH —//—

DRN. L.GILBERT	DATE 11-9-72	digital EQUIPMENT CORPORATION
DR D. L.GILBERT	DATE 11-9-72	
ENG. I. MORRIS	DATE 11-9-72	TITLE BAII-F ACCESSORY ARRANGEMENT
PROJ. ENG. I. MORRIS	DATE 11-9-72	
PROD. J SWANSON	DATE 11-27-72	

NEXT HIGHER ASSY. E-UA-BAII F-0
SCALE —//—
SHEET 2 OF 2

SIZE	CODE	NUMBER	REV.
D	AR	BAII-F-01	C

DIST.

DIGITAL EQUIP. CORP.

NOTES:

1. ALL DIM. SHOWN ARE FOR REF. ONLY INDICATED BY ASTERISKS (*)
2. ETCH CURRENT SHOWN IS MAXIMUM ALLOWABLE FOR THIS BOARD. ETCH FOR J1 THRU J10 WILL SUPPORT 100mA MAXIMUM CURRENT.
3. IF ETCH IS CHANGED IN FUTURE, "DO NOT" CHANGE POSITIONS OF J1 THRU J10, AS THEY MUST FIT IN PUNCHED PANELS AT NEXT HIGHER ASS'Y.
4. FIXTURE 9606076 MUST BE USED TO ALIGN J1-J10 DURING SOLDERING.

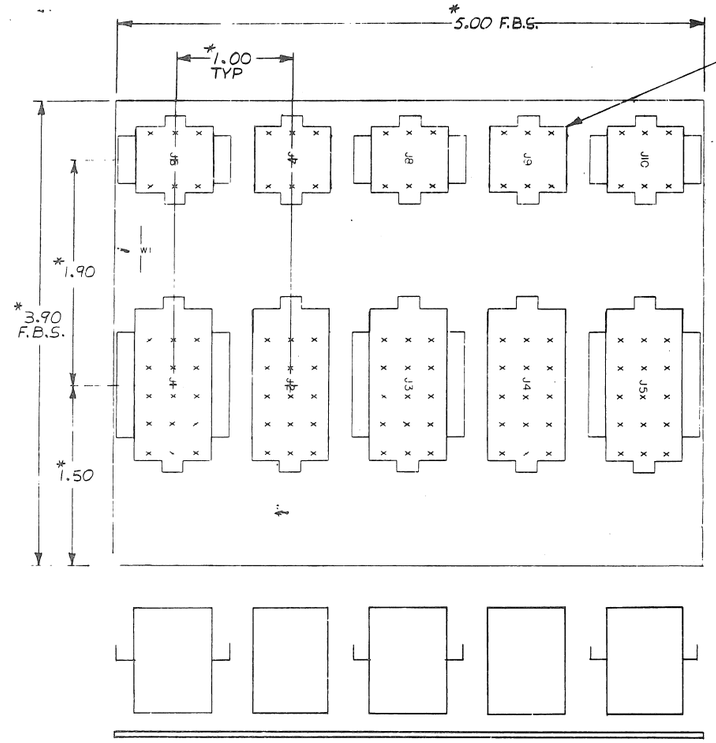

CUT TABS OFF 4 CONN'S AS SHOWN.

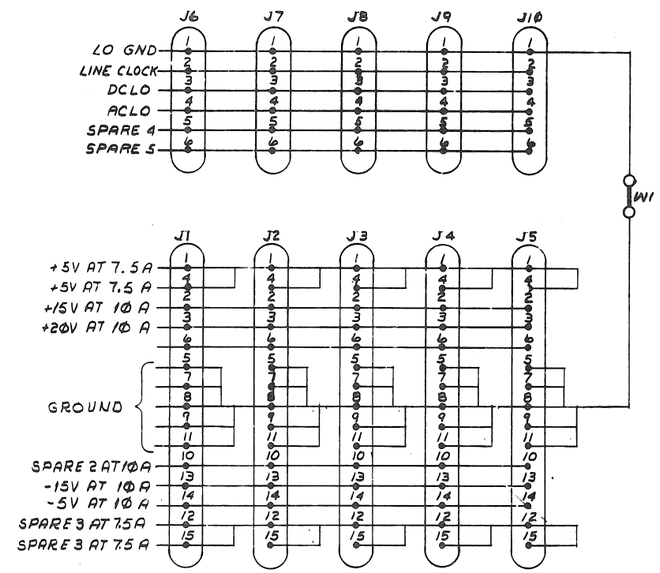

QTY	REF DESIGNATION	DESCRIPTION	PART NO.	ITEM NO.
REF.		X-Y COORDINATE HOLE LOCATION	X-CO-5410590-0-4	1
REF.		ASSY/DRILLING HOLE LAYOUT	E-AH-5410590-0-5	2
REF.		MODULE ECO HISTORY	B-MH-5410590-0-6	3
1		ETCHED CIRCUIT BOARD	5010589	4
5	J6 THRU J10	CONNECTOR (6 CIRCUIT) SOCKET	1209350-06	5
5	J1 THRU J5	CONNECTOR (15 CIRCUIT) SOCKET	1209350-15	6
105		PIN, FEMALE	1209456	7
P/A	W1	BUSWIRE #22 AWG	9107560-01	8
REF.		ALIGNMENT FIXTURE	9606076	9

PARTS LIST

ETCH BOARD REV B

FIRST USED ON OPTION MODEL: 11/45

IC TYPE	GND	+5V
GND AND 5V ARE USUALLY PIN 7 AND 14 RESPECTIVELY EXCEPTIONS ARE STATED ABOVE		

IC PIN LOCATIONS

DEC NO.	EIA NO.	DEC NO.	EIA NO.

SEMICONDUCTOR CONVERSION CHART

REV	CHANGE NO.	CHK	ORIGINATED	
A	5410590-00001	X		
B				

REVISIONS

B. MINOR

DRN. R. Counter 6-1-73
ENG. 6/20/73
ENG. 6/11/73
PROJ. ENG. 6/11/73
PROD. 8-1-73

NEXT HIGHER ASSY

SCALE

SHEET 1 OF 1

digital EQUIPMENT CORPORATION MAYNARD, MASSACHUSETTS

TITLE SYSTEM UNIT POWER DISTRIBUTOR

SIZE D CODE CS NUMBER 5410590-0-1 REV. B

DIST.

DEC FORM NO DRD-135A

BRUNING 40-522 16699

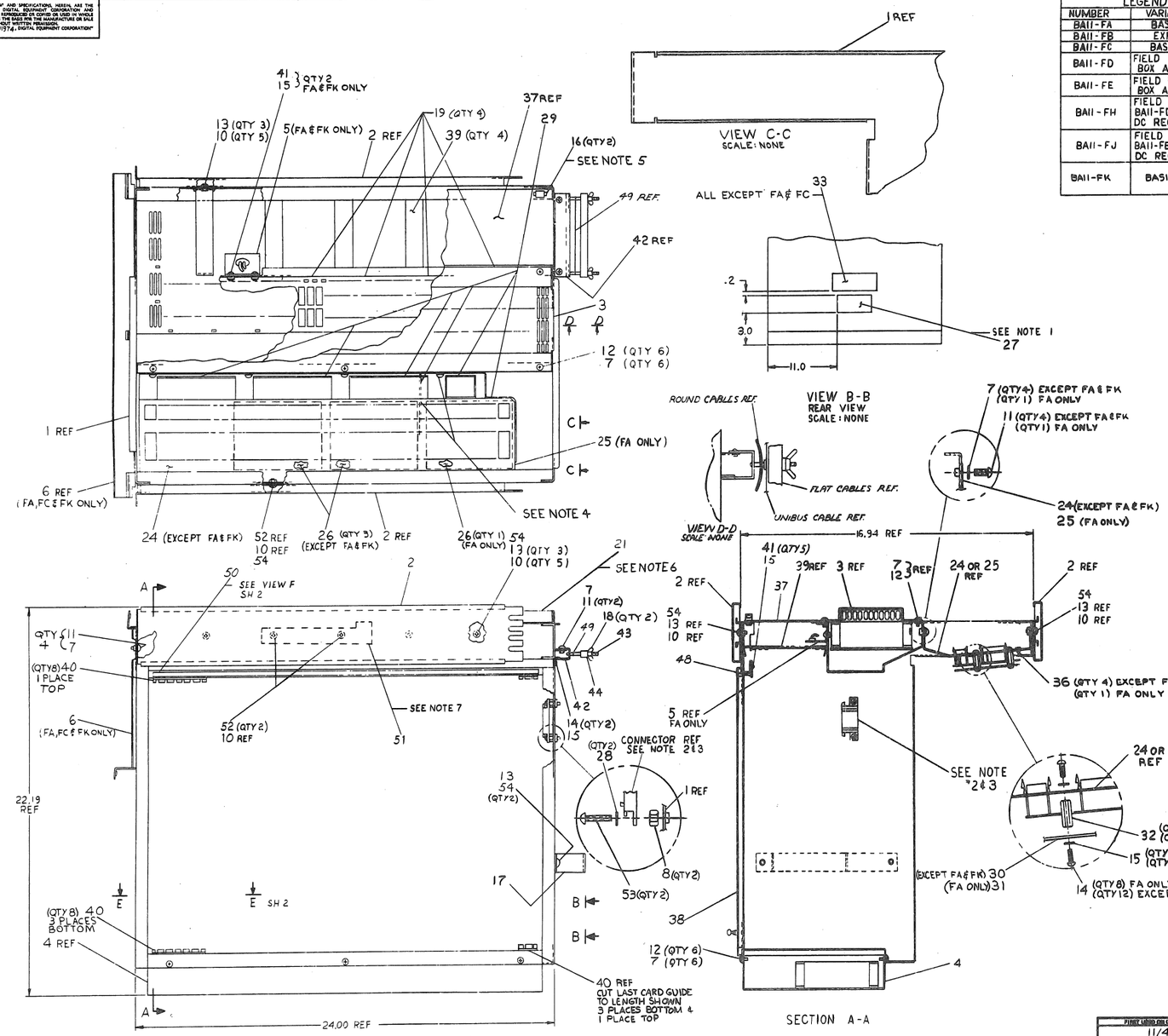

LEGEND	
NUMBER	VARIATION
BAII-FA	BASIC 11/45
BAII-FB	EXPANDER
BAII-FC	BASIC 11/40
BAII-FD	FIELD EXPANSION BOX ASSY 115 V
BAII-FE	FIELD EXPANSION BOX ASSY 230 V
BAII-FH	FIELD EXPANSION BAII-FD WITH ±20V DC REGULATOR
BAII-FJ	FIELD EXPANSION BAII-FE WITH ±20V DC REGULATOR
BAII-FK	BASIC 11/70

NOTES:

1. MECHANICAL STATUS DECAL MUST SHOW BOX VARIATION AND REVISION.
2. CONNECTOR P13 PART OF HARNESS 7009540 IS INSTALLED AT NEXT HIGHER ASSY 11/45 OR 11/70 IT IS SHOWN FOR REF ONLY, ABOVE INFO IS FOR BAII-FA & FK ONLY
3. CONN J7 SHOWN FOR REF ONLY MATES WITH P7 PART OF HARNESS #7009566 THEY ARE INSTALLED AT NEXT HIGHER ASSY D-AR-BAII-F-01, ABOVE INFO IS FOR BAII-FD, FE, FH & FJ ONLY
4. ITEM #240R25 USING PARTS #71 11 TO BE MOUNTED TO LOCATION INDICATED (FOR FA ONLY)
5. INSTALL ITEM #16 BY PUSHING IT INTO COVER ITEM #37. WHEN COVER IS CLOSED #16 WILL AUTOMATICLLY LOCK TO CHASSIS ITEM #
6. ITEM #21 D-AR-BAII-F-0 ON THIS PARTS LIST IS FOR EXPANSION UNIT
7. ASSEMBLE ITEM #51 WHEN SLIDE IS IN HALF EXTENDED POSITION. FOR RIGHT HAND SIDE, TIP OF ITEM #51 IS FACE UP (AS SHOWN). FOR LEFT HAND SIDE, TIP OF ITEM #51 IS FACE DOWN.

OFF SHEET PARTS LIST SEE A-PL-BAII-F-0

QTY.	DESCRIPTION	PART NO.	ITEM NO.
	PARTS LIST		

FIRST USED ON CPU/CONSOLE MODEL: 11/45

DIMENSIONAL TOLERANCE: DIMENSIONS ARE MILLIMETERS UNLESS OTHERWISE SPECIFIED

MATERIAL: EXTERNAL

FINISH

NEXT HIGHER ASSY: D-UA-11/45-0-0

SCALE 1/2 SHEET 1 OF 2

DRN. DATE 10/16/74; DSN. DATE 10/16/74; TECH. ENG. DATE 10/16/74; PROJ. ENG. DATE 10/16/74; MFG. DATE 10/16/74

digital

TITLE: MOUNTING BOX ASSY

SIZE E | CODE UA | NUMBER BAII-F-0 | REV. AH

DIST.

REV	DATE	ECO
AH	10/16/74	
AG	10/16/74	
AF	10/16/74	
AE	10/16/74	
AD	10/16/74	
AC	10/16/74	
AB	10/16/74	
AA	10/16/74	
Y	10/16/74	
X	10/16/74	
W	10/16/74	
V	10/16/74	
U	10/16/74	
T	10/16/74	
S	10/16/74	
R	10/16/74	
P	10/16/74	
N	10/16/74	
M	10/16/74	

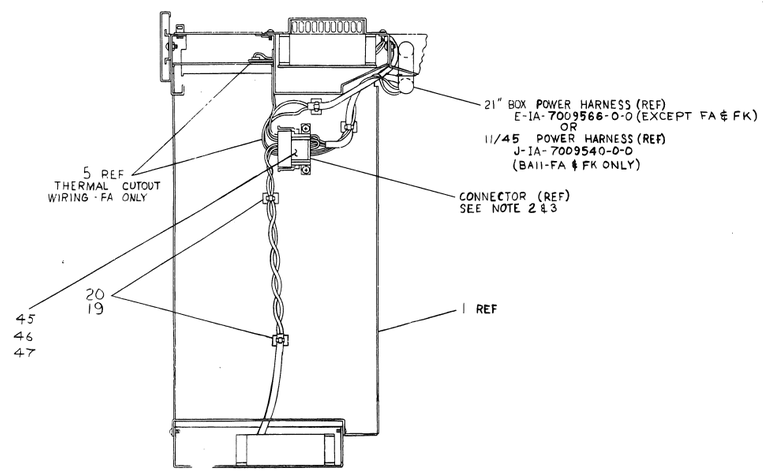

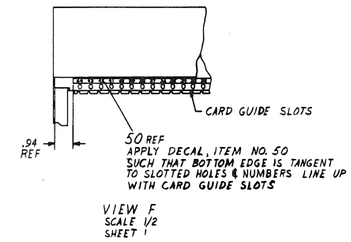

VIEW F
SCALE 1/2
SHEET 1

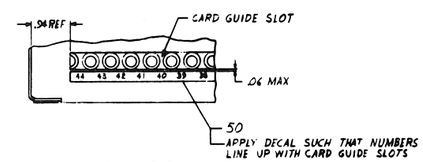

VIEW E-E
SCALE 1/1
SHEET 1

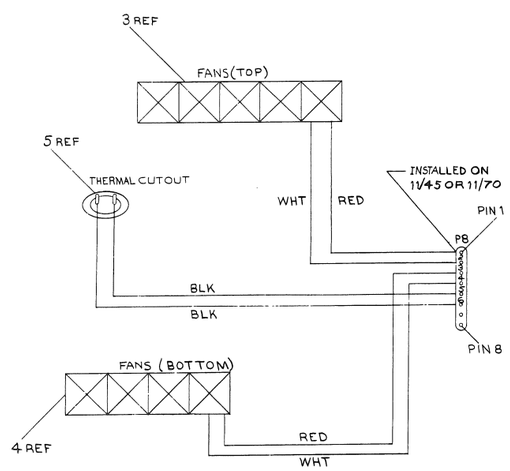

WIRING DIAGRAM
FOR FA & FK ONLY
USED ON SERIAL
NUMBER 2000 & GREATER

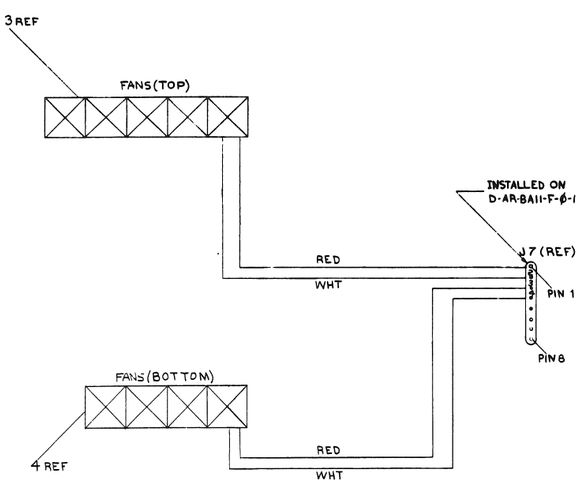

WIRING DIAGRAM
FOR ALL EXCEPT FA & FK
USED ON SERIAL NUMBERS
2000 & GREATER

REVISIONS		
CHX	CHANGE NO	REV.

TITLE	SIZE	CODE	NUMBER	REV.
MOUNTING BOX ASSY	E	UA	BA11-F-0	AH
SCALE 1/2 SHEET 2 OF 2	DIST			

DIGITAL EQUIPMENT CORPORATION
MAYNARD, MASSACHUSETTS
PARTS LIST

MADE BY B. BLODGETT DATE 5/30/74 | CHECKED D. HEALY DATE 9/18/74 | SECTION 1
ENG T. W. Kenyon DATE 12/10/74 | PROD J. Bordeleau DATE 12/10/74 | ISSUED SECT. 1

ITEM NO	DWG NO./PART NO.	DESCRIPTION	BA11-FA	BA11-FB	BA11-FC	BA11-FD	BA11-FE	BA11-FH	BA11-FJ	BA11-FK
1	E-IA-7010083-0-0	CHASSIS	1	1	1	1	1	1	1	1
2	1209152-2	SLIDE CHASSIS 22 1/2" TRAVEL	1pr	1pr	1pr	1pr	1pr	1pr	1pr	1pr
3	E-IA-7010253-0-0	FAN ASSY (TOP)	1	1	1	1	1	1	1	1
4	E-IA-7010351-0-0	FAN ASSY (BOTTOM)	1	1	1	1	1	1	1	1
5	C-AD-7010082-0-0	THEPMAL SWITCH BRKT ASSY	1	-	-	-	-	-	-	1
6	E-IA-7409272-0-0	BRKT. BEZEL MTG.	1	-	1	-	-	-	-	1
7	9006634	WASHER INT. TOOTH #8	16	15	16	15	15	15	15	18
8	9006818	SPACER .38 AF. X .25 LG. AL. #8	2	2	2	2	2	2	2	2
9	9006041-1	SCR. PHL. PAN HD #8-32 X .75 LG.	2	2	2	2	2	2	2	—
10	9006565	NUT KEPS #10-32	10	10	10	10	10	10	10	10
11	9006037-1	SCR. PHL. PAN HD #8-32 X .38	7	6	10	6	6	6	6	6
12	9006418-1	SCR. SELF TAP. 8-32 X .38	12	12	12	12	12	12	12	12
13	9006071-3	SCR. PH. TRUSSHD #10-32 X .38 LG.	8	8	8	8	8	8	8	8
14	9006022-1	SCR. PH. PAN HD #6-32 X .38 LG.	7	7	7	7	7	7	7	7
15	9006633	WASHER INT. TOOTH #6	10	14	14	14	14	14	14	9
16	9009537	SQEEZE RELEASE	2	2	2	2	2	2	2	2
17	C-MD-7413130-0-0	CLAMP, CABLE	1	1	1	1	1	1	1	1
18	9006571	NUT, WING #8-32	2	2	2	2	2	2	2	2
19	9007880	TIE WRAPS	6	3	3	3	3	3	3	8
20	9008264	MOUNT ADH. BACK	6	3	3	3	3	3	3	4
21	D-AR-BA11-F-Ø1	BA11-F ACCESSORY ARRANGEMENT	-	-	-	1	1	1	1	1
~~22~~	~~A-DC-5309413-0-0~~	~~DECAL, EQP. RGUIL. (UL)~~	~~1~~	~~1~~	~~1~~	~~1~~	~~1~~	~~1~~	~~1~~	~~1~~

TITLE: MOUNTING BOX ASSY | ASSY NO. D-UA-BA11-F-Ø | SHEET 1 OF 3 | SIZE A | CODE PL | NUMBER BA11-F-0 | REV. AH | ECO NO. BA11F-00031 | DIST.

DEC FORM DEC 16 (325) 1031 N870
DRA 110

DIGITAL EQUIPMENT CORPORATION
MAYNARD, MASSACHUSETTS
PARTS LIST

MADE BY B. BLODGETT DATE 5/30/74 | CHECKED D. HEALY DATE 9/18/74 | SECTION 1
ENG T. W. Kenyon DATE 12/10/74 | PROD J. Bordeleau DATE 12/10/74 | ISSUED SECT. 1

ITEM NO.	DWG NO./PART NO.	DESCRIPTION	BA11-FA	BA11-FB	BA11-FC	BA11-FD	BA11-FE	BA11-FH	BA11-FJ	BA11-FK
45	A-DC-7406960-0-0	DECAL, 115V, 60 CYCLES	A/R	-	A/R	1	-	1	-	-
46	A-DC-7406789-0-0	DECAL, 115V, 50 CYCLES	A/R	-	A/R	-	1	-	1	A/R
47	A-DC-7409872-2-0	DECAL, P8	A/R	A/R	A/R	A/R	A/R	A/R	A/R	1
48	D-MD-7414125-0-0	VERTICAL CARD GUIDE	1	1	1	1	1	1	1	1
49	B-IA-7011033-0-0	CLAMP UNIBUS CABLE ASSY	1	1	1	1	1	1	1	1
50	A-PS-3613281-02	DECAL, ADHESIVE BACKED, BA11-F	2	2	2	2	2	2	2	2
51	B-MD-7418117-0-0	SLIDE LOCK	2	2	2	2	2	2	2	2
52	9006073-02	SCR. FLAT PHL HD #10-32 X .50	4	4	4	4	4	4	4	4
53	9006040-01	SCR. PAN HD. PHL. #8-32 x 5/8	—	—	—	—	—	—	—	2
54	9006635	INTERNAL LOCKWASHER	—	—	—	—	—	—	—	8

TITLE: MOUNTING BOX ASSY | ASSY NO. D-UA-BA11-F-Ø | SHEET 3 OF 3 | SIZE A | CODE PL | NUMBER BA11-F-0 | REV. AH | ECO NO. | DIST.

DEC FORM DEC 16 (325) 1031 N870
DRA 110

DIGITAL EQUIPMENT CORPORATION
MAYNARD, MASSACHUSETTS
PARTS LIST

MADE BY B. BLODGETT DATE 5/30/74 | CHECKED D. HEALY DATE 9/18/74 | SECTION 1
ENG T. W. Kenyon DATE 12/10/74 | PROD J. Bordeleau DATE 12/10/74 | ISSUED SECT. 1

ITEM NO	DWG NO./PART NO.	DESCRIPTION	BA11-FA	BA11-FB	BA11-FC	BA11-FD	BA11-FE	BA11-FH	BA11-FJ	BA11-FK
~~23~~	~~A-DC-5309414-0-0~~	~~DECAL, EQP. RGUIL. (UL)~~	~~1~~	~~1~~	~~1~~	~~1~~	~~1~~	~~1~~	~~1~~	~~1~~
24	D-IA-7411220-0-0	PANEL, POWER DISTRIBUTION	-	1	1	1	1	1	1	-
25	D-IA-7411221-0-0	PANEL, POWER DISTRIBUTION	1	-	-	-	-	-	-	-
26	D-CS-5410590-0-1	PWR. DISTRIBUTION BOARD	1	3	3	3	3	3	3	-
27	A-DC-7411325-0-0	DECAL MECHANICAL STATUS	1	1	1	1	1	1	1	1
28	9008072	WASH EXT. TOOTH #8	2	2	2	2	2	2	2	2
29	9007035	GROMMET, NYLON	12'	60'	60"	60"	60"	60"	60'	6"
30	C-MD-7411363-0-0	KNUCKLE GUARD	-	1	1	1	1	1	1	-
31	B-MD-7411364-0-0	KNUCKLE GUARD (11/45)	1	-	-	-	-	-	-	-
32	9006859	SPACER .25 AF X .75 LG. #6-32	4	6	6	6	6	6	6	-
33	A-DC-7411324-0-0	EXPANDER BOX DECAL	-	1	-	1	1	1	1	1
34	9006662	WASH. FLAT .500 O.D. X .187 I.D.	2	2	2	2	2	2	2	—
~~35~~	~~90068-71-1~~	~~SCR. PH. HD PAN 10-32 X .38~~	~~2~~	~~2~~	~~2~~	~~2~~	~~2~~	~~2~~	~~2~~	~~2~~
36	9007867	CABLE TIE MOUNT	1	4	4	4	4	4	4	-
37	E-MD-7412587-0-0	COVER, TABLE TROUGH	1	1	1	1	1	1	1	1
38	E-MD-7412585-0-0	COVER, LEFT SIDE	1	1	1	1	1	1	1	1
39	B-MD-7412297-0-0	TROUGH, SUPPORT (CHASSIS)	4	4	4	4	4	4	4	4
40	D-PS-1211630-0-0	CARD GUIDE	32	32	32	32	32	32	32	32
41	9006020-3	SCR. TRUSS PHL. #6-32 X .25	2	-	-	-	-	-	-	2
42	C-MD-7413106-0-0	CLAMP, CABLE	1	1	1	1	1	1	1	1
43	C-MD-7413107-0-0	BAR, CABLE	1	1	1	1	1	1	1	1
44	C-MD-7413108-0-0	U/BOLT CABLE	1	1	1	1	1	1	1	1

TITLE: MOUNTING BOX ASSY | ASSY NO. D-UA-BA11-F-Ø | SHEET 2 OF 3 | SIZE A | CODE PL | NUMBER BA11-F-0 | REV. AH | ECO NO. | DIST.

DEC FORM DEC 16 (325) 1031 N870

digital EQUIPMENT CORPORATION MAYNARD MASSACHUSETTS

DRAWING DIRECTORY

CUSTOMER PRINT SET INDEX

THIS IS PRINT SET

	SEQUENCE
DRAWING DIRECTORY	B-DD-861-0
POWER CONTROL, 861	E-UA-861-0-0
PILOT CONTROL	D-CS-5411522-0-1
CIRCUIT SCHEMATIC 861	D-CS-861-A-1
CIRCUIT SCHEMATIC 861	D-CS-861-B-1
CIRCUIT SCHEMATIC 861	D-CS-861-C-1
PACKAGING INSTRUCTION	A-PI-3700083-0-0
CIRCUIT SCHEMATIC 861	D-CS-861-F-1

UNIT VARIATIONS

VAR	TITLE	PRINT SET
861-A	POWER CONTROL, 861-A	
861-B	POWER CONTROL, 861-B	
861-C	POWER CONTROL, 861-C	
861-F	POWER CONTROL, 861-F	

REVISIONS

DATE	CHG. NO.	REV
2/73	861-3	A
8/74	861-4	B
12-74	861-6	C
4-75	861-7	D
7-75	861-8	E
2-76	861-9	F
4-76	861-10	H
8-76	861-11	J
9-76	861-12	K
1-77	861-13	L
10-77	861-14	M

USED ON OPTION/MODEL

SHEET 1 OF 3

DRN. SCHMIDT	DATE 9/13/72	TITLE 861 POWER CONTROL
CHK'D. B. ALLEN	DATE 9/13/72	
PROJ ENG. JIM KALAGHER	DATE 9/13/72	
PROD. Fazio Paul	DATE 9/25/72	SIZE B · CODE DD · NUMBER 861-0 · REV M
FIELD SERV. Paton Irving	DATE 9/25/72	DIST

DEC 16-32-1-1002-1A-R922

DRB 106

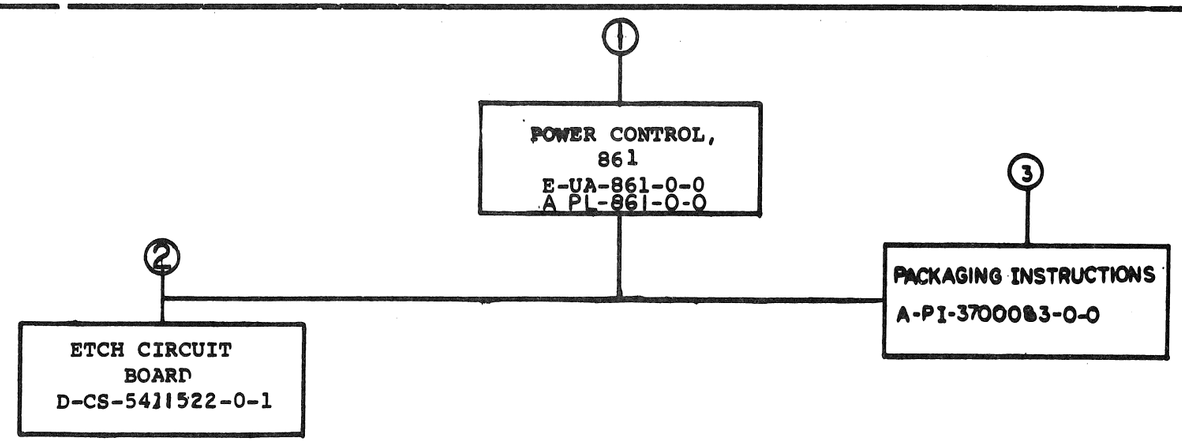

TITLE		SIZE	CODE	NUMBER	REV
POWER CONTROL	SHEET 2 OF 3	B	DD	861-0	M

DRB 107
DEC 16—(1954)—1062—3—N87.

ELECTRICAL

CUSTOMER PRINT SET 861-1				MFG. SET	FIND NO.	DRAWING NO.	REV	NO OF SHT	DESCRIPTION	OPTION NO./FILE DATE
X					1	D-CS-861-A-1	E	1	CIRCUIT SCHEMATIC, 861 P.C.	
X						D-CS-861-B-1	E	1	CIRCUIT SCHEMATIC, 861 P.C.	
X						D-CS-861-C-1	E	1	CIRCUIT SCHEMATIC, 861 P.C.	
						~~A-SP-861-0-1~~	~~0~~		~~TEST AND INSPECTION PROC.~~	
X						D-CS-861-F-1	D	1	CIRCUIT SCHEMATIC, 861 P.C.	
						A-SP-861-Ø-3	*		ENGINEERING SPEC 861/866	
					2	D-CS-5411522-0-1	A	1	PILOT CONTROL	
						PC-5011522			ETCH CIRCUIT BOARD	
						K-CO-5411522-0-4			X Y COORDINATE HOLE LOCATION	
						D-AH-5411522-0-5			ASSY DRILLING HOLE LAYOUT	
						B-MH-5411522-0-6			MODULE ECO HISTORY	

MECHANICAL

CUSTOMER PRINT SET 861-1				MFG SET	FIND NO.	DRAWING NO.	REV	NO OF SHT	DESCRIPTION	OPTION NO./FILE DATE
X					1	E-UA-861-0-0	K	2	POWER CONTROL, 861	
						E-IA-7410567-0-0	C	1	CHASSIS, 861 PC	
						D-IA-7410568-0-0	C	2	COVER, 861 P.C.	
						A-PS-3611216-0-0			NAME PLATE 861-A	
						C-SS-3611216-0-1		1	NAME PLATE 861-A ARTWORK	
						A-PS-3611217-0-0			NAME PLATE 861-B	
						C-SS-3611217-0-1		1	NAME PLATE 861-B ARTWORK	
						A-PS-3611218-0-0			NAME PLATE 861-C	
						C-SS-3611218-0-1		1	NAME PLATE 861-C ARTWORK	
						A-PS-3612382-0-0			NAME PLATE 861-F	
						C-SS-3612382-0-1		1	NAME PLATE 861-F ARTWORK	
						A-PL-861-0-0	J	4	POWER CONTROL, 861	
						A-SP-861-Ø-2	*	10	TEST AND INSPECTION PROCEDURE	
					3	A-PL-3700083-0-0		2	PACKAGING INSTRUCTIONS	
						A-PS-9905229-0-0		2	FULL OVER LAP CARTON	
						A-PS-9905228-0-0		2	EXPANDER POLYSTYRENE FOAM INSERT	

CUSTOMER PRINT SET CODES		TITLE		SIZE	CODE	NUMBER	REV
	X = PRINT OF DOCUMENT INCLUDED IN PRINT SET C = INCLUDES ALL PRINTS INDICATED ON DOCUMENT S = CONFIDENTIAL AUTHORIZED SIGNATURE REQUIRED	POWER CONTROL, 861	SHEET 3 OF 3	B	DD	861-0	M

DRB 108

DEC 16-(325)-1062-2B-R972

LEGEND			
DWG. NO.	VARIATION		
	VAC OUT	PHASES	AMP OUT
861-A	120	2	32
861-B	240	1	16
861-C	120	1	24
861-F	120	1	12

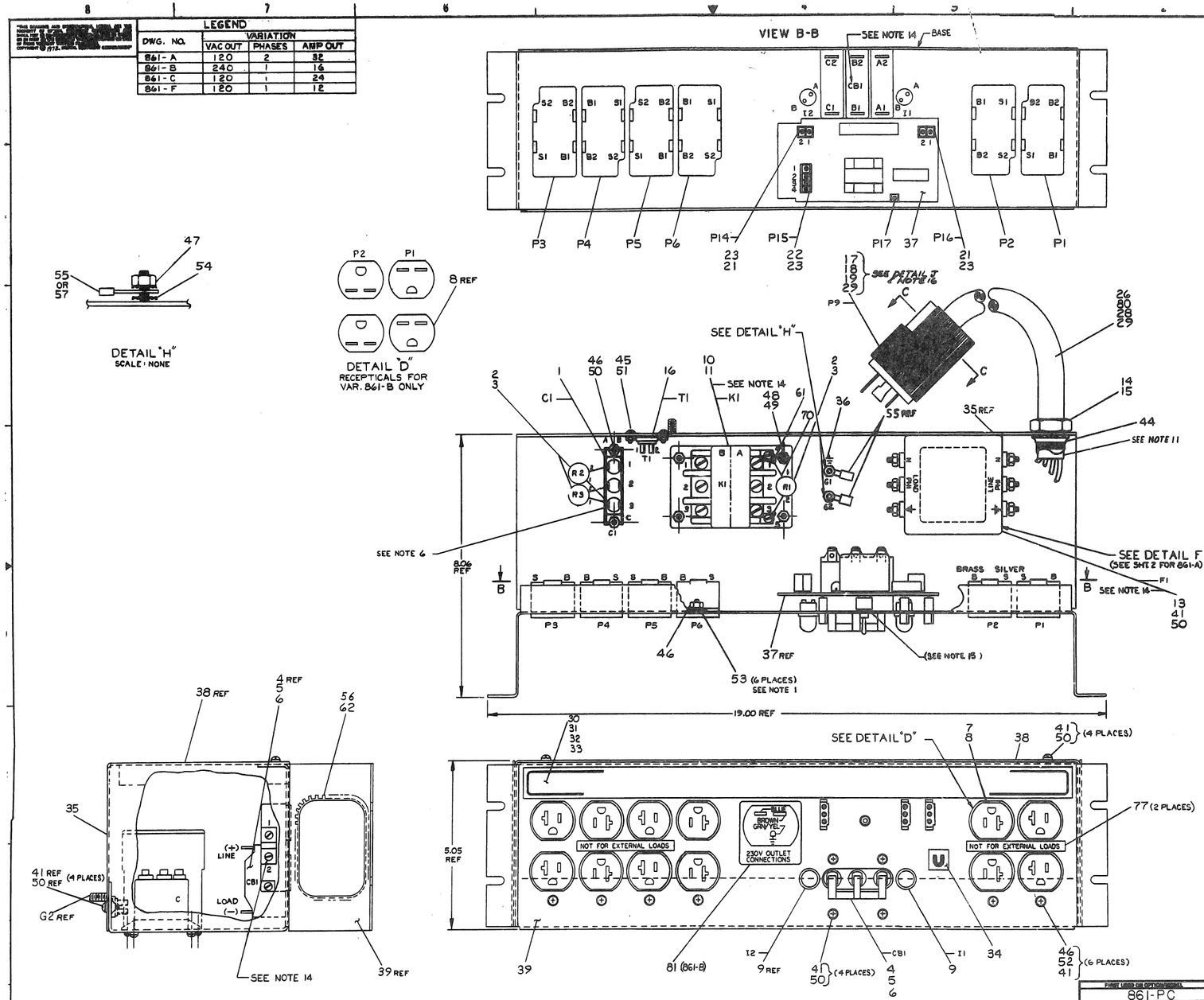

NOTES:

1. ITEM 53 ⅝ EXT WASHER MUST BE BETWEEN CHASSIS AND MOUNTING TAB OF RECEPTACLE (P1-P6).
2. ~~REMOVE BURRS AND SHARP EDGES FROM GROUND STUD (G1) AND GROUND BUSS (G2) AND GROUND BUSS (FOR 861-B) PRIOR TO PAINTING. REMOVE ALL LOOSE PAINT FROM GROUND STUD (G1) AND GROUND BUSS (G2) PRIOR TO PAINTING. REMOVE ALL PAINT FROM THE GROUND STUD (G1) AND GROUND BUSS (G2) PRIOR TO PAINTING.~~
3. ~~[illegible]~~
4. ~~REMOVE BURRS AND SHARP EDGES FROM GROUND STUD (G1) AND GROUND BUSS (G2) PRIOR TO PAINTING.~~
5. ~~[illegible]~~
6. C1-3 IS THE COMMON(C) SIDE OF C1.
7. ~~[illegible]~~
8. ~~TO PREVENT STRESS FROM SHRINKAGE OF BOARD USE ITEM 16 (STRAIN RELIEF) BETWEEN CHASSIS AND P.C. BOARD.~~
9. USE TIE WRAPS (ITEM 43) A/R.
10. ~~REMOVE BURRS AND SHARP EDGES FROM GROUND STUD (G1) AND GROUND BUSS (G2) PRIOR TO PAINTING.~~
11. POWER CORD TO EXTEND APPROX. .50 IN. BEYOND LOCKNUT (ITEM 44) FOR ITEMS 27 & 29. ITEMS 26 & 28 TO REMAIN FLUSH WITH LOCKNUT.
12. ~~RECOMMENDED TORQUE LEVEL FOR USE ON ALL (ITEMS 10 & 11) IS 10 INCH-LBS.~~
13. REF. WIRE LIST. THESE CONNECTIONS HAVE THREE RING TERMINALS AND REQUIRE (ITEM 82) SCREW 8-32 x 1/4" WITH (ITEM 40) LOCKWASHER.
14. REQUIRED TORQUE LEVELS FOR CERTAIN ELECTRO-MECHANICAL CONNECTIONS.
    A. 18±2 IN-LBS. FOR TERMINALS ON F1 (ITEMS 12 & 13). THE 6 LUG BOXES ON K1 (ITEMS 10 & 11) AND NUTS ON GROUND STUD G1.
    B. 16±2 IN-LBS FOR 8-32 SCREW CONNECTIONS ON OUTLETS P1 THRU P6 (ITEMS 7 & 8).
    C. 12±2 IN-LBS ON 8-32 SCREW CONNECTIONS ON CIRCUIT BREAKER CONNECTIONS CB1 (ITEMS 4, 5 & 6).
15. USE NO MOUNTING HARDWARE FOR SWITCH.
16. STRAIN RELIEF SPACING: (L)

861	A	1/8"
861	B	0
861	C	1/4"
861	F	0

FOR PARTS LIST SEE A-PL-861-0-0

QTY.	DESCRIPTION	PART NO.	ITEM NO.
	PARTS LIST		

FIRST USED ON (SYSTEM/MODEL)	861-PC		
DRAWN	D. SCHMINT	DATE 9-12-72	
CHK'D	J. KALAGHER	DATE 10-6-72	
ENG.	R. BERTON	DATE 10-6-72	
PROJ. ENG.	ALLEN	DATE 10-6-72	
PROD.	P. FAZIO	DATE 10-6-72	
SEE PARTS LIST	B-DD-861-0-0	SCALE 1/1	SHEET 1 OF 2

TITLE: POWER CONTROL 861

SIZE	CODE IDENT NO.	NUMBER	REV.
E	UA	861-0-0	M

REV.	DESCRIPTION	DATE	APPROVED
H	RE USED ON BOARDS		
	861-00010		

WIRE TABLE, 861-A

ITEM NO.	DESCRIPTION AWG	DESCRIPTION COLOR	FROM CONN	FROM POINT	FROM WITH	TO CONN	TO POINT	TO WITH	REMARKS
2	—	—	R1-1		—	K1-4		70,61	1. IN
	—	—	R1-2		—	K1-5		70,61	1. IN
3	14	BLU	K1-B3		*	P6-S2		60	6. IN
↑	↑	↑			*	P4-S2		60	4.25 IN
			K1-B3		*	C1-3B		63	4.5 IN
↓		↓	P6-S1		60	P5-S1		60	4.5 IN
73		BLU	P4-S1		60	P3-S1		60	4.5 IN
72		BRN	K1-B2		*	C1-2B		63	4.5 IN
72		BRN			*	P6-B1		60	6. IN
72		BRN	P6-B2		60	P5-B2		60	3. IN
71		BLK	K1-B1		*	C1-1B		63	3.5 IN
71		BLK			*	P4-B1		60	6. IN
71	↓	BLK	P4-B2		60	P3-B2		60	3. IN
73	14	BLU	CBI-C2		55	PI-S1		60	9. IN
66	12	↓				K1-A3		*	5. IN
73	14	↑	K1-A3		*	P15-2		23,22	3.75 IN
73	14	BLU	P16-2		23,22	K1-A3		*	6.5 IN
65	12	BRN	CBI-B2		55	K1-A2		*	6.75 IN
72	14	BRN				PI-B1		60	10.5 IN
64	12	BLK	CBI-A2		55	K1-A1		*	7.5 IN
71	14	BLK				P2-B1		60	6. IN
71	↓	BLK	K1-A1		*	P15-3		23,22	5.5 IN
72		BRN	K1-A2		*	K1-4		63	4. IN
72	↓	BRN	P16-1		23,21	K1-5		63	7.5 IN
73	14	BLU	PI-S2		60	P2-S1		60	4. IN
66	12	BLU	CBI-C1	SEE NOTE 13	55	F1-N	LOAD	55	5.5 IN
9	—	RED	I1-A		—	CBI-C1	SEE NOTE 13	58	5.75 IN
9	—	RED	I2-A		—	CBI-C1		58	4. IN
9	—	BLK	I1-B		—	CBI-A1		58	3.75 IN
64	12	BLK	F1-PH1	LOAD	55	CBI-A1		55	3. IN
9	—	BLK	I2-B		—	CBI-B1		58	4.75 IN
65	12	BRN	F1-PH2	LOAD	55	CBI-B1		55	5.25 IN
74	14	ORN	PI4-1		23,21	T1-1		63	10. IN
74	14	ORN	PI4-2		23,21	T1-2		63	10. IN
68	12	GRN/YEL	F1-⏚	LOAD	55	GI	SEE DETAIL H	55	4.75 IN
67	14	GRN/YEL	PI7		SOLD	G2		57	7.78 IN
2	—	—	R2 1		70	CI-3A		59	1.1 IN
↑	—	—	R3 1		↑				
↓	—	—	R2 2		↓	CI-1A		59	1.25 IN
2	—	—	R3 2		70	CI-2A		59	1. IN
26	12	BLK	P9 Y		17	F1-PH1	LINE	55	15. FT
↑	↑	WHT	P9 S		↑	F1-N	↑	55	↑
↓	↓	RED	P9 X		↓	F1 PH2	↓	55	↓
26	12	GRN	P9 G		17	F1 ⏚	LINE	55	15. FT

* STRIP WIRE .38 IN

WIRE TABLE, 861-B

ITEM NO.	DESCRIPTION AWG	DESCRIPTION COLOR	FROM CONN	FROM POINT	FROM WITH	TO CONN	TO POINT	TO WITH	REMARKS
3	—	—	R1-1		—	K1-4		70,61	1. IN
	—	—	R1-2		—	K1-5		70,61	1. IN
73	14	BLU	K1-B3		*	P6-S1		60	5.5 IN
↑	↑	↑			*	P4-S1		60	5.5 IN
			K1-B3		*	CI-3B		63	5.5 IN
↓		↓	P6-S2		60	P5-S1		60	4.5 IN
73		BLU	P4-S2		60	P3-S1		↓	4.5 IN
72		BRN	K1-B1		*	P6-B1		↑	6.5 IN
↑		↑			*	P4-B1		60	6.5 IN
			K1-B1		*	CI-1B		63	5.0 IN
			P6-B2		60	P5-B1		60	3. IN
			P4-B2		60	P3-B1		60	3. IN
			K1-A1		*	K1-4		63	4.25 IN
			K1-A1		*	P15-4		23,22	6. IN
↓		↓	CBI-A2		55	PI-B2		60	10. IN
72		BRN				K1-A1		*	7.5 IN
73		BLU	CBI-C2		55	K1-A3		*	5.5 IN
↑		↑				PI-S2		60	8. IN
			K1-A3		*	P16-2		23,21	6. IN
↓		↓	K1-A3		*	P15-2		23,22	4. IN
73	↑	BLU	PI-S1		60	P2-S2		60	3. IN
72	14	BRN	PI-B1		60	P2-B2		60	4.5 IN
9	—	BLK	I1-B		—	CBI-B2		58	4. IN
↑	—	BLK	I2-B		—	CBI-B2		58	4. IN
↓	—	RED	I1-A		—	CBI-A1		58	5. IN
9	—	RED	I2-A		—	CBI-C1		58	5. IN
72	14	BRN	CBI A1		57	F1 PH1	LOAD	57	3. IN
73	↓	BLU	CBI C1		57	F1 N	LOAD	57	4.75 IN
74		ORN	PI4 1		23 21	T1 1		63	10.1 IN
74		ORN	PI4 2		23 21	T1 2		63	10. IN
67	↓	GRN/YEL	F1 ⏚	LOAD	57	GI	SEE DETAIL "H"	57	4.75 IN
67	14	GRN/YEL	PI7		SOLD	G2		57	7.75 IN
3	—	—	R2-1		70	CI-3A		59	1. IN
	—	—	R2-2		70	CI-1A		59	1. IN
72	14	BRN	P16-1		23,21	K1-5		63	7. IN
80	↓	GRN/YEL	P9-6		18	F1-⏚	LINE	57	15. FT
80	↓	BRN	P9-Y		18	F1-PH1	LINE	57	15. FT
80	14	BLU	P9-X		18	F1-N	LINE	57	15. FT

WIRE TABLE, 861-C

ITEM NO.	DESCRIPTION AWG	DESCRIPTION COLOR	FROM CONN	FROM POINT	FROM WITH	TO CONN	TO POINT	TO WITH	REMARKS
2	—	—	R1-1		—	K1-4		70,61	1. IN
	—	—	R1-2		—	K1-5		70,61	1. IN
73	14	BLU	K1-B3		*	P6-S1		60	4.5 IN
↑	↑	BLU			↑	P4-S1		↑	5.75 IN
72		BRN	K1-B2			P6-B1			6. IN
		BRN				P5-B2			7.5 IN
71		BLK	K1-B1		↓	P4-B1			6.0 IN
		BLK			*	P3-B2			6.0 IN
73		BLU	P6-S2		60	P5-S1		↓	4.5 IN
73		BLU	P3-S1		60	P4-S2		60	4.5 IN
73		BLU	K1-B3		*	CI-3B		63	4.5 IN
72		BRN	K1-B2		*	CI-2B		63	4.5 IN
71		BLK	K1-B1		*	CI-1B		63	4.5 IN
72		BRN	CBI-B2		55	PI-B2		60	9.5 IN
		BRN				K1-A2		*	6.75 IN
72		BRN	K1-4		63	K1-A2		*	4.25 IN
71		BLK	CBI-C2		55	P2-B1		60	9.0 IN
		BLK				K1-A1		*	5.75 IN
71		BLK	K1-A1		*	P15-3		23,22	5.5 IN
73		BLU	CBI-A2		55	PI-S2		60	7.5 IN
						K1-A3		*	7. IN
↑		↑			60	P2-S2		60	3. IN
↓		↓	PI-S1		22, 33	K1-A3		*	3.75 IN
73		BLU	P16-2		23, 21	K1-A3		*	6.5 IN
72		BRN	P16-1		↑	K1-5		63	6.75 IN
74	↓	ORN	PI4-1		↓	T1-1		63	10.IN
74	14	ORN	PI4-2		23 21	T1-2		63	10.IN
2	—	—	R2-1		70	CI-3A		59	1. IN
↑	—	—	R3-1		↑				
↓	—	—	R2-2		↓	CI-1A		59	1.25 IN
2	—	—	R3-2		70	CI-2A		59	1.1N
68	12	GRN/YEL	F1-⏚	LOAD	55	GI	SEE DETAIL "H"	55	4.75 IN
67	14	GRN/YEL	PI7		SOLDER	G2		57	7.75 IN
65	12	BRN	CBI-B1	SEE NOTE 13	55	F1-PH1	LOAD	55	3.1N
64	12	BLK	CBI-C1		55	F1-PH1	LOAD	55	5.25 IN
9	—	RED	T1-A			CBI-B1	SEE NOTE 13	57	4.25 IN
↑	—	RED	T2-A			CBI-B1			4.75 IN
↓	—	BLK	T1-B			CBI-A1	SEE NOTE 13	57	3.00 IN
9	—	BLK	T2-B			CBI-A1			5.75 IN
66	12	BLU	CBI-A1	SEE NOTE 13	55	F1-N	LOAD	55	4.5 IN
28	↓	GRN	P9-G		19	F1-⏚	LINE	55	15. FT
28	↓	BLK	P9-8		19	F1-PH1	LINE	55	15. FT
28	12	WHT	P9-S		19	F1-N	LINE	55	15. FT

WIRE TABLE, 861-F

ITEM NO.	DESCRIPTION AWG	DESCRIPTION COLOR	FROM CONN	FROM POINT	FROM WITH	TO CONN	TO POINT	TO WITH	REMARKS
2	—	—	R1-1		—	K1-4		70,61	1.1N
	—	—	R1-2		—	K1-5		70,61	1.1N
73	14	BLU	K1-B5		*	P6-S1		60	5.25 IN
73	↑	BLU			↑	P4-S1		↑	4.1N
72		BRN	K1-B2			P6-B1			5.25 IN
72		BRN				P5-B2			5.25 IN
71		BLK	K1-B1			P4-B1		↑	6.25 IN
71		BLK				P3-B2		60	6.25 IN
73		BLU	K1-B3			CI-3B		63	3.5 IN
72	↓	BRN	K1-B2		↓	CI-2B		63	3.5 IN
71	14	BLK	K1-B1		*	CI-1B		63	3.5 IN
2	—	—	R2-2		70	CI-1A		59	1. IN
	—	—	R2-1		↑	CI-3A		59	1. IN
2	—	—	R3-1		↓				1. IN
	—	—	R3-2		70	CI-2A		59	1.25IN
73	14	BLU	K1-A3		*	P15-A		23,22	4.25IN
↑	↑	↑	K1-A3		*	P16-2		23,21	5.75IN
			CBI-A2		55	K1-A3		*	6.75IN
73		BLU				P1-S2		60	8. IN
72		BRN	K1-A2		*	K1-4		63	4.75IN
↑		↑	CBI-B2		55	K1-A2		*	6.5IN
↓		↓				P1-B2		60	8.25IN
72		BRN	K1-5		63	P16-1		23,21	6.75IN
71		BLK	K1-A1		*	P15-3		23,22	6. IN
71		BLK	CBI-C2		55	P2-B1		60	8. IN
71	↓	BLK				K1-A1		*	7. IN
73	14	BLU	P1-S1		60	P2-S2		60	3. IN
9	—	BLK	I1-B		—	CBI-C1		58	4.5IN
↑	—	BLK	I2-B		—	CBI-B1		58	4.5IN
↓	—	RED	I1-A		—	CBI-A1	SEE NOTE 13	58	3.5IN
9	—	RED	I2-A		—	CBI-A1		58	4.5IN
73	14	BLU	CBI-A1	SEE NOTE 13	57	F1-N	LOAD	57	4.5IN
71	↓	BLK	CBI-C1		57	CBI-B1		55	3.IN
71		BLK	F1-PH1	LOAD		CBI-B1			4.5IN
67		GRN/YEL	F1-⏚	LOAD	57	GI	SEE DETAIL H	57	4.75IN
67		GRN/YEL	PI7		SOLD	G2		57	7.75IN
74		ORN	PI4-1		23,22	T1-1		63	10.IN
74		ORN	PI4-2		23,21	T1-2		63	10.IN
73	↓	BLU	P3-S1		60	P4-S2		60	4.5IN
73	14	BLU	P5-S1		60	P6-S2		60	4.5IN
29	16	GRN	P9-6		—	F1-⏚	LINE	—	9.FT
29	16	BLK	P9-X		—	F1-PH1	LINE	57	9.FT
29	16	WHT	P9-Y		—	F1-N	LINE	57	9.FT

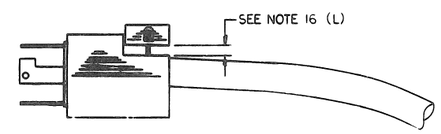

DETAIL J
SCALE: NONE

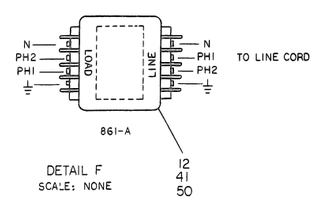

DETAIL F
SCALE: NONE

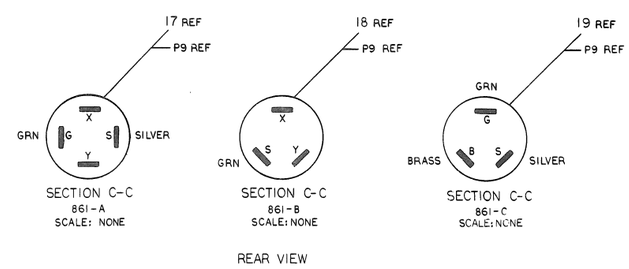

SECTION C-C
861-A
SCALE: NONE

SECTION C-C
861-B
SCALE: NONE

SECTION C-C
861-C
SCALE: NONE

REAR VIEW

REVISIONS		
CHK	CHANGE NO.	REV.

TITLE	SIZE	CODE	NUMBER	REV.
POWER CONTROL, 861	E	UA	861-0-C	M
SCALE 1/1	SHEET 2 OF 2	DIST.		

NOTES:

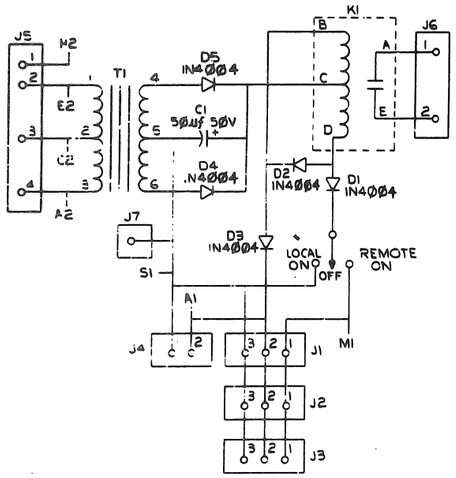

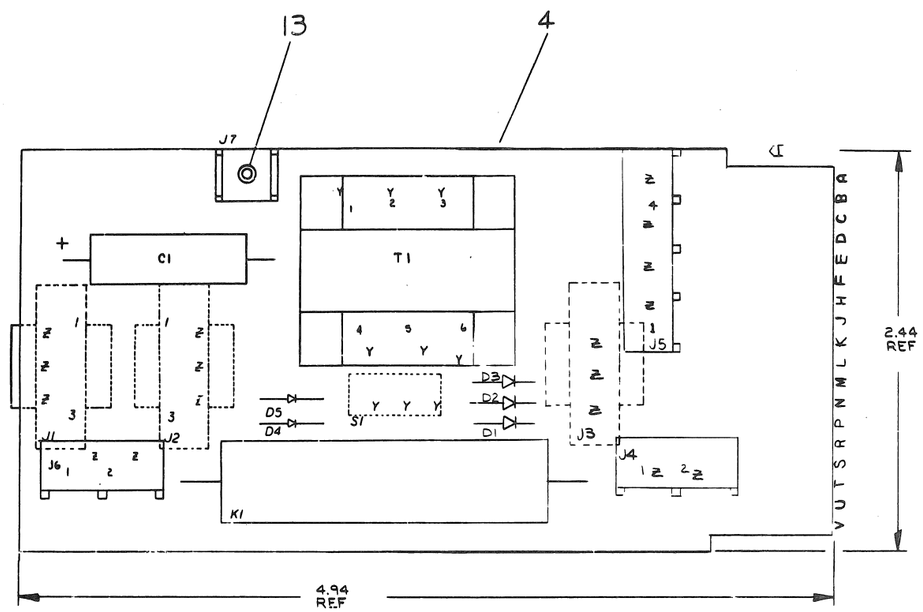

QTY	REF DESIGNATION	DESCRIPTION	PART NO.	ITEM NO.
REF		X-Y COORDINATE HOLE LOCATION	K-CO-5411522-0-4	1
REF		ASSY/DRILLING HOLE LAYOUT	D-AH-5411522-0-5	2
REF		MODULE ECO HISTORY	B-MH-5411522-0-6	3
1		ETCHED CIRCUIT BOARD	9011521	4
1	K1	RELAY, REED, 48 V COIL, 2.5 A CONT.	1212267-00	5
1	T1	TRANSFORMER MMC 9415	1612342-00	6
1	C1	CAP 50 MFD 50V TANT	1000080-00	7
5	D1-D5	DIODE IN4004	1105796-00	8
1	S1	SWITCH	1211180-00	9
3	J1-J3	HOUSING, SOCKET	1209350-03	10
1	J5	CONN, UNIVERSAL, 4 PIN HEADER	1212297-01	11
2	J4, J6	CONN, UNIVERSAL, 2 PIN HEADER	1212297-00	12
1		EYELET	9006732-00	13
9		TERMINAL, SOCKET CONTACT	1209456-01	14
1	J7	TERMINAL, SOLDERLESS	9007113-00	15

PARTS LIST

IC TYPE	GND	+ 5V

GND AND 5V ARE USUALLY PIN 7 AND 14 RESPECTIVELY EXCEPTIONS ARE STATED ABOVE

IC PIN LOCATIONS

REV	CHANGE NO.	CHK
B	5411522-00002	R. KENNEDY

REVISIONS

DEC NO.	EIA NO.	DEC NO.	EIA NO.

SEMICONDUCTOR CONVERSION CHART

FIRST USED ON OPTION MODEL: 861-D / 861-E

ETCH BOARD REV: C

		DATE
DRN.	R.E. Hellum	2/4/75
CHK'D.	W.F. McGrath	2/4/75
ENG.		
MANU. ENG.		
PROD.		

NEXT HIGHER ASSY: E-UA-861-D-Ø

SCALE: NONE

SHEET 1 OF 1

digital EQUIPMENT CORPORATION MAYNARD MASSACHUSETTS

TITLE: PILOT CONTROL

SIZE D | CODE CS | NUMBER 5411522-0-1 | REV. B

DIST.

DCS5411522-0-1 B

NOTE :

1. R1, R2, + R3 ARE MOV VARISTOR SPIKE SURPRESSORS.

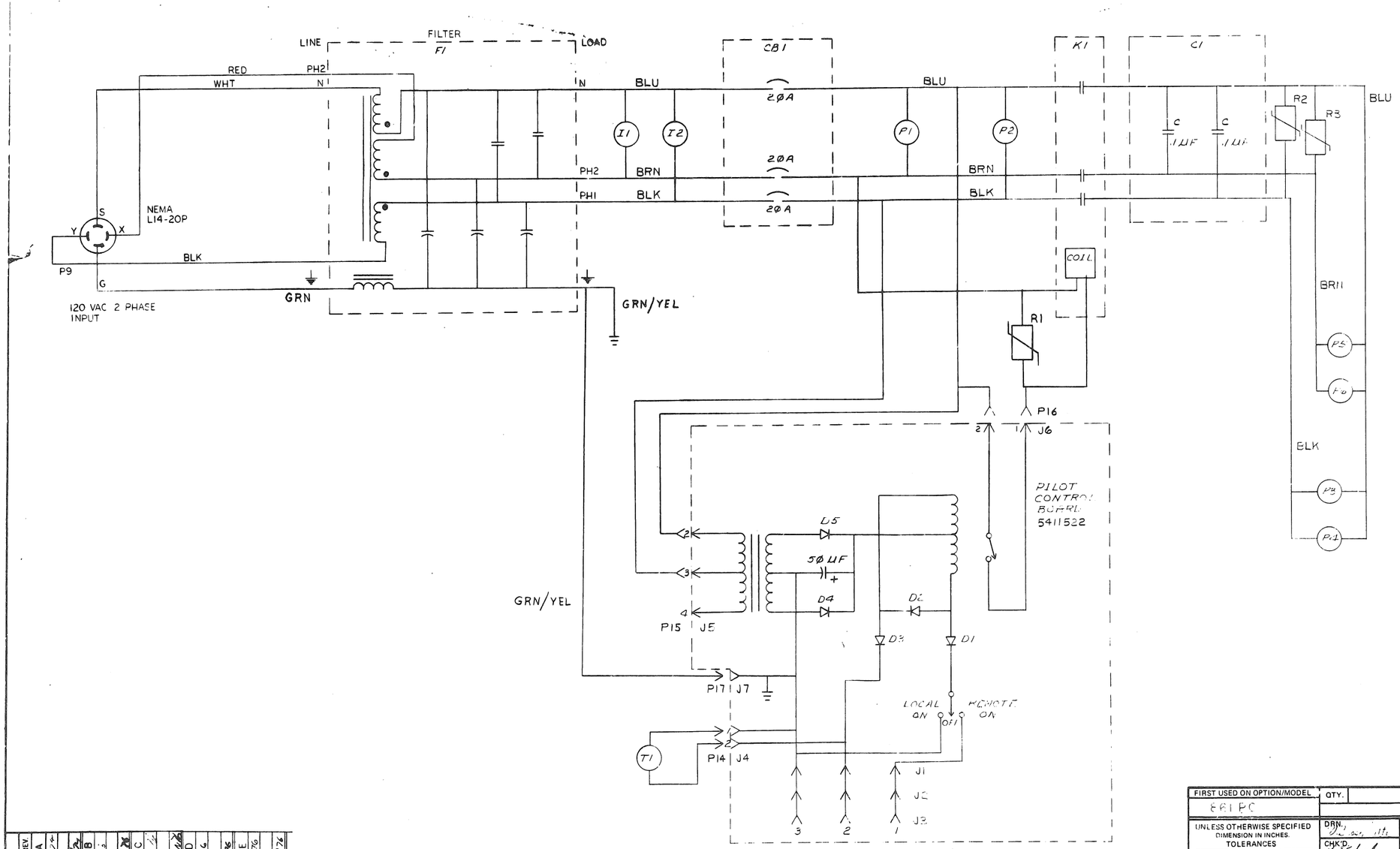

REVISIONS				
ECO	CHANGE NO.	REV		
861-00006	A			
861-00009	B			
861-00010	C			
861-00011	D			
861-00012	E			

FIRST USED ON OPTION/MODEL	QTY.	DESCRIPTION	PART NO.	ITEM NO.
861 PC		PARTS LIST		

UNLESS OTHERWISE SPECIFIED DIMENSION IN INCHES. TOLERANCES

DECIMALS	ANGLES
.XXX ± .005	±0° 30'
.XX ± .02	
.X ± .1	

REMOVE BURRS AND BREAK SHARP CORNERS SURFACE QUALITY ✓

MATERIAL

FINISH

DRN. — DATE 9 11 72
CHK'D — DATE 10-6-72
ENG. — DATE 10-6-72
PROJ. ENG. — DATE
PROD. — DATE

NEXT HIGHER ASSY. B-DD-861-0

SCALE

SHEET

digital EQUIPMENT CORPORATION MAYNARD MASSACHUSETTS

TITLE CIRCUIT SCHEMATIC (861 PC.)

SIZE	CODE	NUMBER	REV.
D	CS	861-A-1	E

DIST.

NOTE :
1. R1+R2 ARE MOV VARISTOR SPIKE SURPRESSORS.

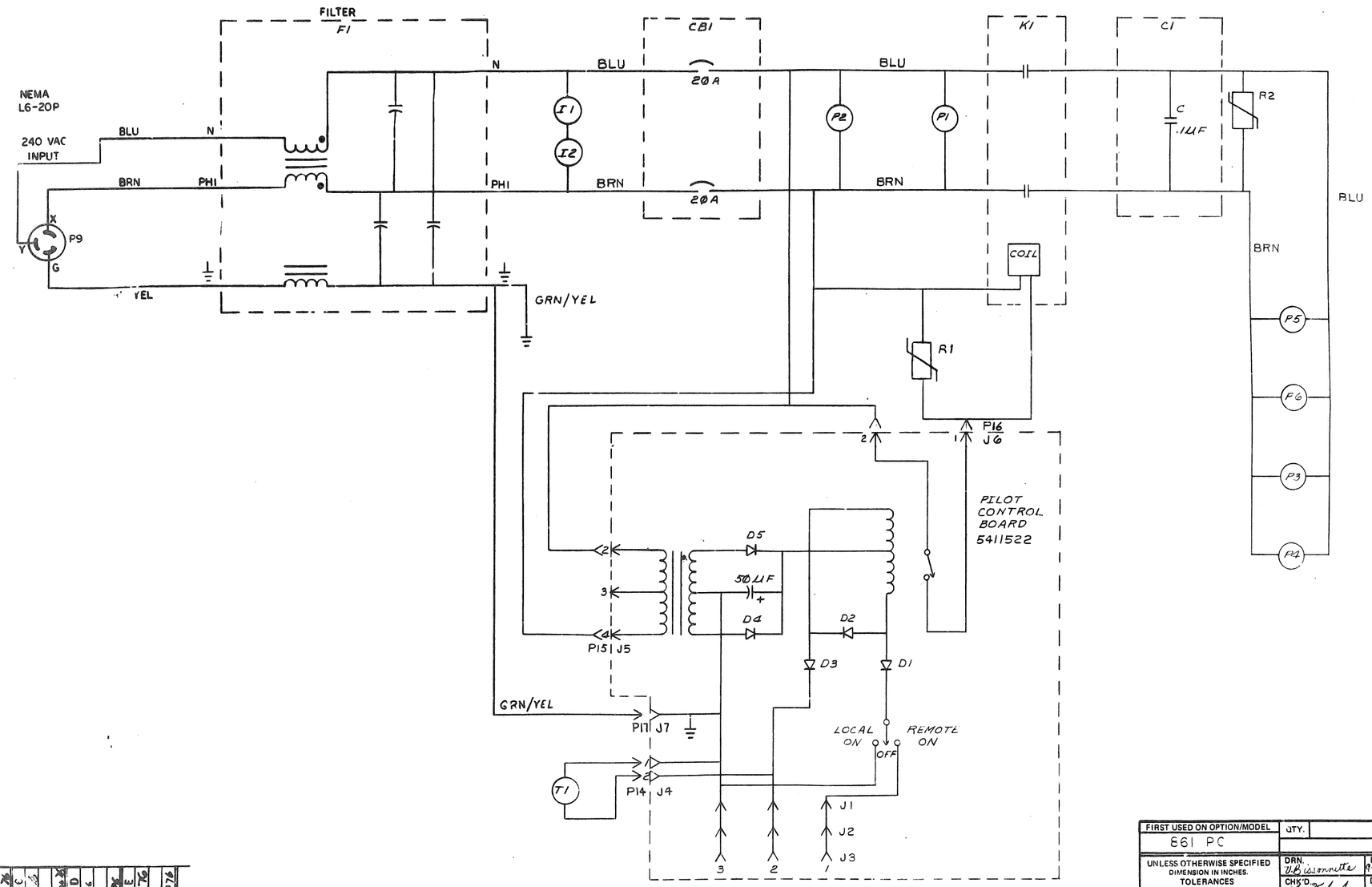

FIRST USED ON OPTION/MODEL	QTY.	DESCRIPTION	PART NO.	ITEM NO.
861 PC		PARTS LIST		

UNLESS OTHERWISE SPECIFIED DIMENSION IN INCHES. TOLERANCES

DECIMALS	ANGLES
.XXX = .005 .XX = .02 .X = .1	±0° 30'

REMOVE BURRS AND BREAK SHARP CORNERS SURFACE QUALITY ✓

MATERIAL —/—

FINISH —/—

DRN. V. Bissonnette	DATE 9-11-72	
CHK'D. K. Takyuchi	DATE 11-6-72	
ENG. R. Brown	DATE 10-6-72	
PROJ. ENG. Robert M. Allen	DATE 10/6/72	
PROD. Paul Travis	DATE 11-6-72	
NEXT HIGHER ASSY. B-DD-861-0		
SCALE —/—		
SHEET 1 OF 1		

digital EQUIPMENT CORPORATION MAYNARD MASSACHUSETTS

TITLE CIRCUIT SCHEMATIC (ECI-BPC)

SIZE	CODE	NUMBER	REV.
D	CS	861-B-1	E

DIST

REV	CHANGE NO	
A	861-00006	J. Chesser 12-10-72
B	861-00009	G. Brooks 12-FEB-74
C	861-00010	R. KENNEDY 13 Feb 74
D	861-00011	R. KENNEDY 16 Aug 74
E	861-00012	S. CARTER 23 SEP 74

NOTE :
1 R1 R2 + R3 ARE MOV VARISTOR SPIKE SURPRESSORS.

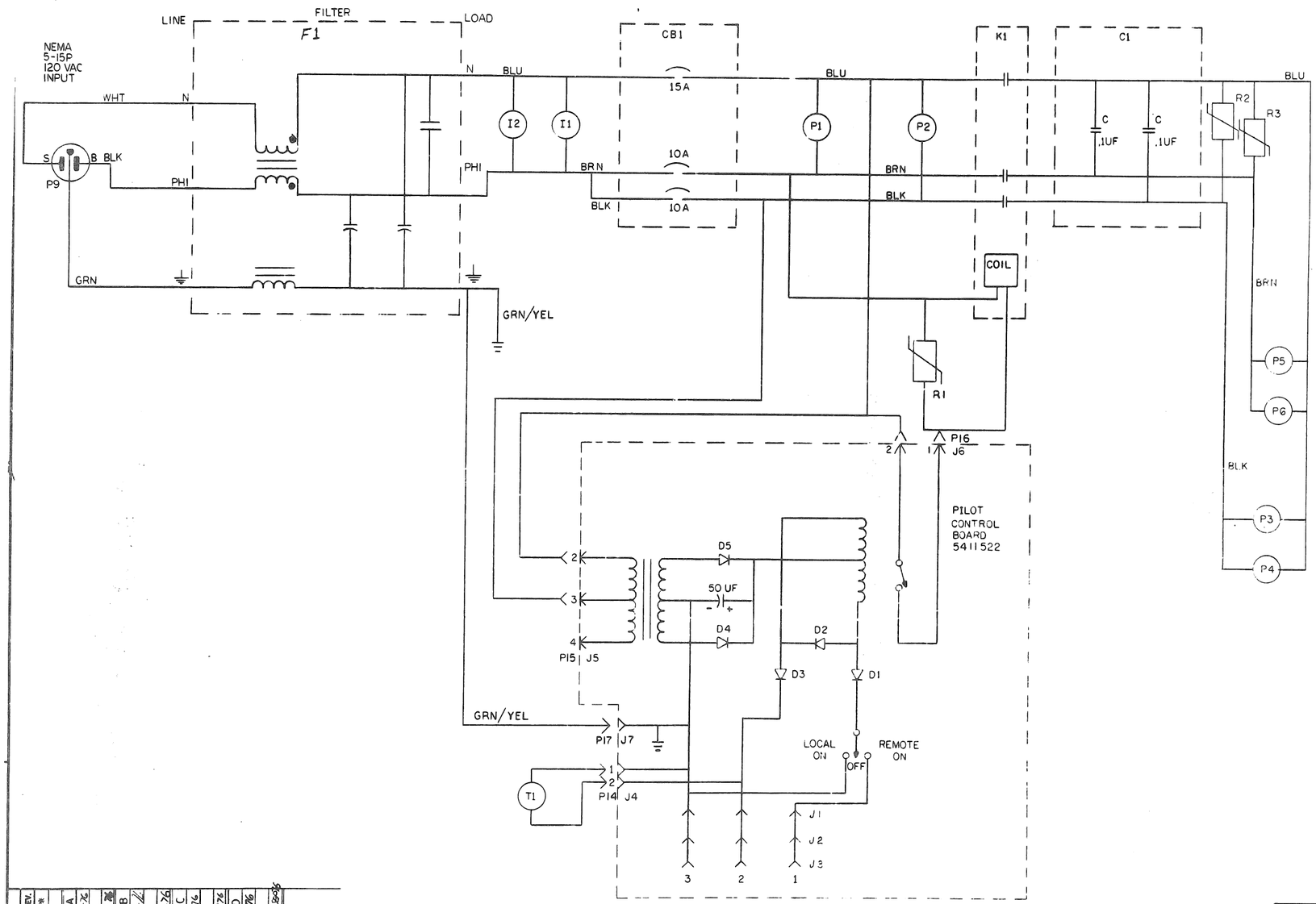

REVISIONS			
CHK	CHANGE NO.	REV.	
—	861-00007 ORIGINATED	*	
	861-00009	A	
	861-00010	B	
	861-00011	C	
	861-00012	D	

DESCRIPTION	DWG./PART NO.	ITEM NO.
UNLESS OTHERWISE SPECIFIED DIMENSIONS ARE IN INCHES		

ANGLES ±0° 30'	CLASS OF ACCURACY (CHECK ONE)	NOMINAL DIMENSION RANGE INCHES					
		OVER 0 TO 0.2	OVER 0.2 TO 1.2	OVER 1.2 TO 4.0	OVER 4.0 TO 12.0	OVER 12.0 TO 40.0	OVER 40.0 TO 80.0
SURFACE QUALITY IN MICROINCHES	MEDIUM	±.004	±.008	±.012	±.016	±.024	±.04
	PREFERRED	±.012	±.016	±.025	±.04	±.063	±0.1

QUANTITY & VARIATION

THIRD ANGLE PROJECTION

REMOVE BURRS AND BREAK SHARP CORNERS

DO NOT SCALE DWG

MATERIAL B-DD-861-0

FINISH

DRN.		
CHK'D		4-21-75
ENG.		5-2-75
PROJ. ENG.		5-2-75
PROD.		5-2-75
NEXT HIGHER ASSY.		
SCALE		
SHEET 1 OF 1		

FIRST USED ON 861 P.C.

digital

TITLE CIRCUIT SCHEMATIC 861-F P.C.

SIZE D | CODE CS | NUMBER 861-F-1 | REV. D

DIST.

NOTE :
1. R1, R2 + R3 ARE MOV VARISTOR SPIKE SUPPRESSORS.

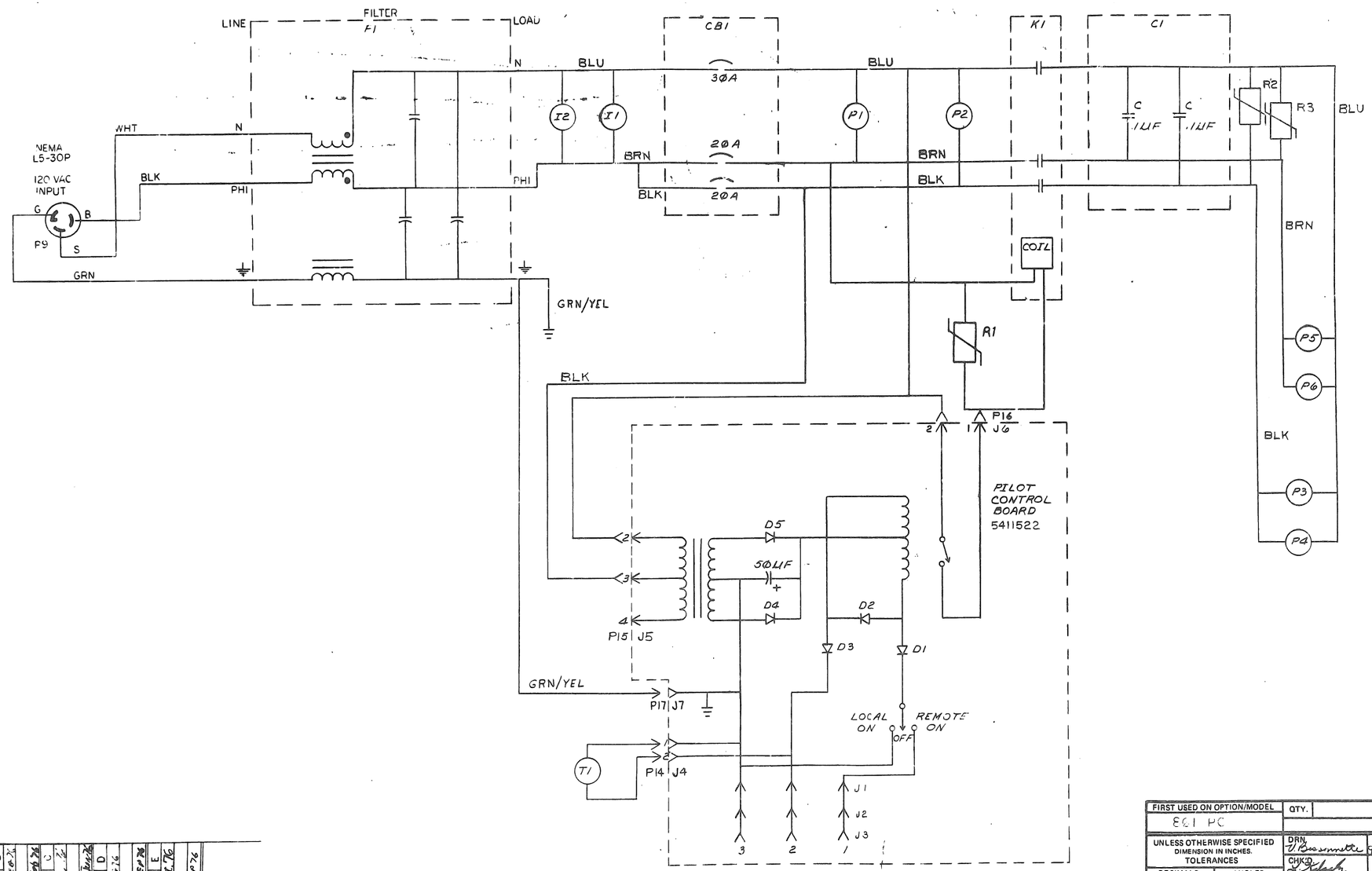

FIRST USED ON OPTION/MODEL	QTY.	DESCRIPTION	PART NO.	ITEM NO.
861 PC		PARTS LIST		

UNLESS OTHERWISE SPECIFIED DIMENSION IN INCHES. TOLERANCES

DECIMALS	ANGLES
.XXX = .005 .XX = .02 .X = .1	±0° 30'

REMOVE BURRS AND BREAK SHARP CORNERS SURFACE QUALITY ✓

MATERIAL —

FINISH —

		DATE
DRN.	U Bassmatter	9-12-72
CHKD.	J. Kolesch	10-6-72
ENG.	R. Brock	10-6-72
PROD. ENG.	Robert A. Gill	10-6-72
PROD.	Mark Lyon	10-7-72

NEXT HIGHER ASSY. B-DC-861-C

SCALE —

SHEET OF

digital EQUIPMENT CORPORATION
MAYNARD MASSACHUSETTS

TITLE CIRCUIT SCHEMATIC 861-C PC.

SIZE	CODE	NUMBER	REV.
D	CS	861-C-1	E

DIST.

REVISIONS

CHANGE NO	REV	
961-00006	A	
861-00009	B	
861-00010	C	
861-00011	D	
861-00012	E	

DIGITAL EQUIPMENT CORPORATION
MAYNARD MASSACHUSETTS

PACKAGING INSTRUCTION | REV: A | DATE: 4-73

TITLE: 861 POWER CONTROL, INTERPLANT PACKAGE

MATERIAL REQUIREMENTS

Quantity	Identification No.	Purchase Spec	Description
1	7-2008 1314 0500-0	9905229	Full overlap carton
2		9905228	Expanded polystyrene foam insert
A/R			3-inch wide Glasflex tape

PACKAGING INSTRUCTIONS

Step	Procedure
1	Set up the full over lap carton (9905229) using one strip of tape across the bottom and extending up the sides approximately three inches. See Figure 1.
2	Place one expanded polystyrene foam insert (9905228) in each end of the carton with the slots in the foam facing inward.
3	Place the 861 power control in the carton with the ears of the upright sliding into the slots in the foam.
4	Coil the power cord so that it fits into the cavity in the rear of the power control.
5	Close and seal the carton with one piece of tape across the top of the carton and extending down the sides approximately three inches.

ENG	APPD	SIZE	CODE	NUMBER	REV
4/13/73		A	PI	3700083-0-0	A

PACKAGING INSTRUCTION | REV: A | DATE: 4/73

TITLE: 861 POWER CONTROL, INTERPLANT PACKAGE

FIGURE 1

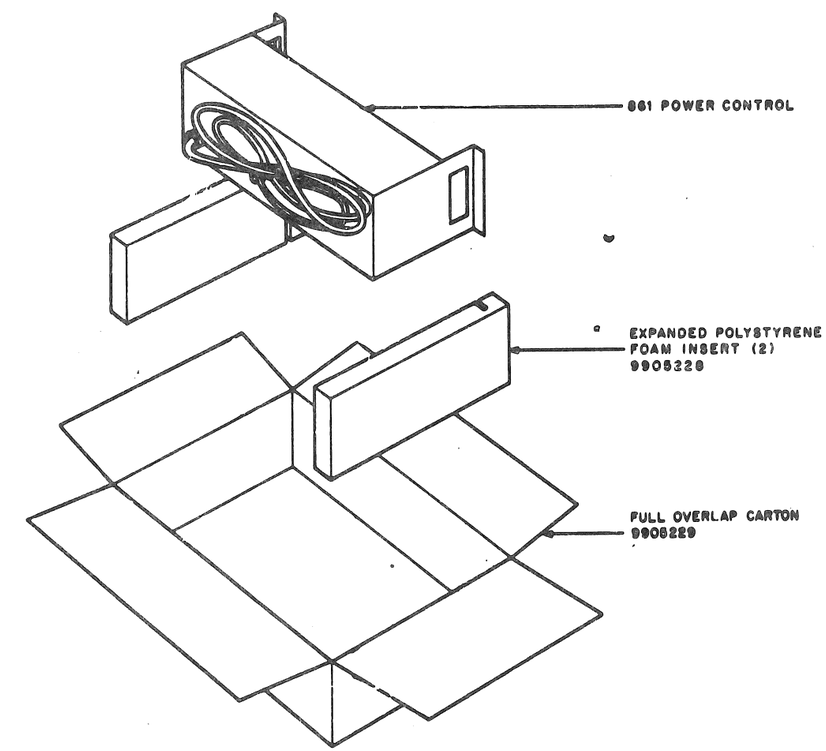

NOTE
Make changes to the "C" size original only and rephotograph.

ENG.	APPD.	SIZE	CODE	NUMBER	REV
		A	PI	3700083-0-0	A

DRC-107

digital EQUIPMENT CORPORATION MAYNARD MASSACHUSETTS

DRAWING DIRECTORY

CUSTOMER PRINT SET INDEX

THIS IS PRINT SET

	SEQUENCE
DRAWING DIRECTORY	B-DD-H742Ø-Ø
WIRING DIAGRAM	D-CS-H742Ø-Ø-Ø
POWER LINE MONITOR	D-CS-5411086-0-1
H742Ø POWER SUPPLY	E-UA-H742Ø-Ø-Ø
H7420 POWER SUPPLY (P.L.)	A-PL-H742Ø-Ø-Ø

UNIT VARIATIONS

VAR	TITLE	PRINT SET 1
H742Ø-A	H742Ø POWER SUPPLY (120V)	
H742Ø-B	H742Ø POWER SUPPLY (240V)	
H7420-H	H7420 POWER SUPPLY (120V)	

REVISIONS

DATE	CHG. NO.	REV
6-75	H7420-1	A
7-75	H7420-2	B
3-76	H7420-3	C
4-76	H7420-4	D
9-76	H7420-5	E
7-77	H7420-6	F
9-77	7013791-1	H
3-78	7013791-1	J

USED ON OPTION/MODEL

SHEET 1 OF 3

DRN. R.E.Thellen	DATE 1/29/75	TITLE H742Ø POWER SUPPLY
CHK'D. R.Gagnebin	DATE 2/3/75	
PROJ ENG. R.J. Wall	DATE 2/3/75	
PROD. J.Bonnette	DATE 2/3/75	SIZE B · CODE DD · NUMBER H742Ø-Ø · REV J.
FIELD SERV. W.J.Finch	DATE 2-19-75	DIST

DRB 106

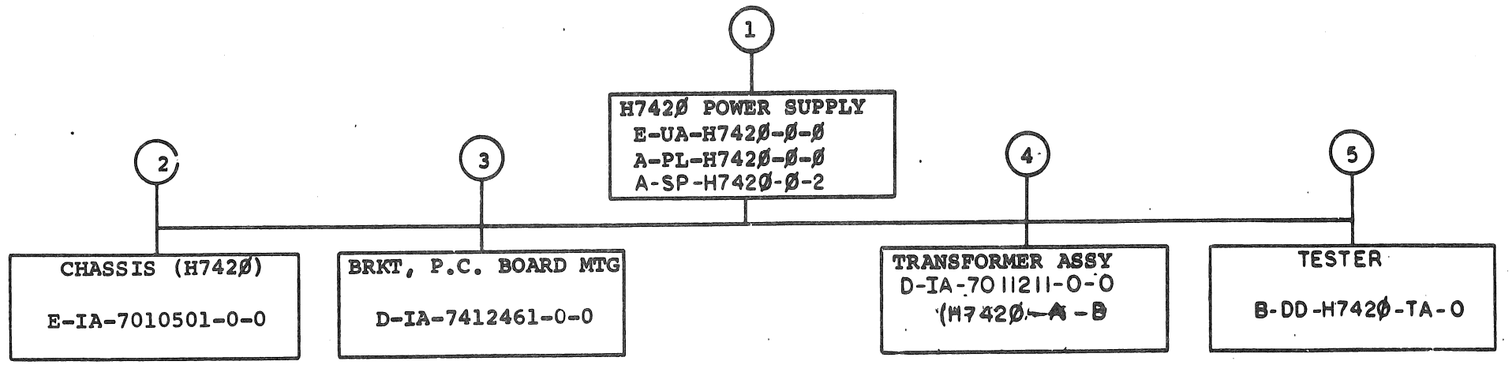

TITLE		SIZE	CODE	NUMBER	REV
H742Ø POWER SUPPLY	SHEET 2 OF 3	B	DD	H742Ø-Ø	J

DRB 107

DEC (325)-1062-3-N871

ELECTRICAL

CUSTOMER PRINT SET 1	MFG. SET	FIND NO.	DRAWING NO.	REV	NO OF SHT	DESCRIPTION	OPTION NO./FILE DATE
X		1	B-DD-H742Ø-Ø	J	3	DRAWING DIRECTORY	
X			D-CS-H742Ø-Ø-1	A	2	WIRING DIAGRAM	
X			D-CS-5411086-0-1	#	4	POWER LINE MONITOR	
			A-SP-H742Ø-Ø-2	#	16	ENGINEERING SPEC.	
		5	B-DD-H742Ø-TA		1	TESTER DRAWING DIRECTORY	
			B-CS-H742Ø-TA-1	A	1	TESTER WIRING DIAGRAM	
			A-UA-H742Ø-TA-Ø		1	H7420 TESTER	
			A-PL-H742Ø-TA-Ø		2	TESTER PARTS LIST	
			A-SP-H742Ø-Ø-3		2	TEST PROCEDURE	

MECHANICAL

CUSTOMER PRINT SET 1	MFG SET	FIND NO.	DRAWING NO.	REV	NO OF SHT	DESCRIPTION	OPTION NO./FILE DATE
X		1	E-UA-H742Ø-Ø-Ø	H	4	H742Ø POWER SUPPLY	
X			A-PL-H742Ø-Ø-Ø	H	2	H742Ø POWER SUPPLY	
			D-MD-7412459-0-0	A	1	COVER, CONTROL BOX	
			[illegible]			[illegible]	
			C-IA-7010730-0-0		1	POWER INDICATOR ASSY	
			D-IA-7010729-0-0	A	1	CABLE, REGULATOR BOARD	
			D-IA-7010728-0-0	A	1	CABLE, FAN POWER	
			C-IA-7010727-0-0	E	1	POWER CORD, ASSEMBLY	
			A-DC-7413184-0-0		1	POWER SUPPLY DECAL (H742Ø)	
			[illegible]			[illegible]	
			[illegible]			[illegible]	
			A-DC-7413966-0-0		1	POWER SUPPLY DECAL (H7420A)	
			A-DC-7413967-0-0		1	POWER SUPPLY DECAL (H7420B)	
		2	E-IA-7010501-0-0		1	CHASSIS (H742Ø)	
			E-IA-7412948-0-0		2	PLATE, BASE	
			E-IA-7412949-0-0		2	HOUSING, REGULATOR	
		3	D-IA-7412461-0-0		1	BRKT, P.C. BOARD MFG.	
			B-SS-7412461-0-1		1	BRKT, P.C. BOARD MFG. (SS)	
		4	D-IA-7011211-0-0	B	2	TRANSFORMER ASSY (H7420A&B)	
			C-IA-7010813-0-0		1	CAP/VAR ASSEMBLY	

CUSTOMER PRINT SET CODES	
	X = PRINT OF DOCUMENT INCLUDED IN PRINT SET
	C = INCLUDES ALL PRINTS INDICATED ON DOCUMENT
	S = CONFIDENTIAL AUTHORIZED SIGNATURE REQUIRED

TITLE	SHEET	SIZE	CODE	NUMBER	REV
H742Ø POWER SUPPLY	3 OF 3	B	DD	H742Ø-Ø	J

DRB 108

DEC 16-(325)-1062-2B-R972

NOTES:

1. DOTTED LINES INDICATED WINDINGS OMITTED IN E AND F VERSIONS.
2. VERSION

VERSION	TB1 JUMPERS	CB1
A	2 + 6, 4 + 8	20 A
B	4 + 6	15
E	2 + 6, 4 + 8	20
F	4 + 6	15

3. NUMBERS IN ( ) INDICATE XFORMER LEAD NUMBERS ON E & F VERSION.
4. ~~O RING TERMINAL CONNECTIONS.~~
5. ~~FAST TAB CONNECTIONS.~~

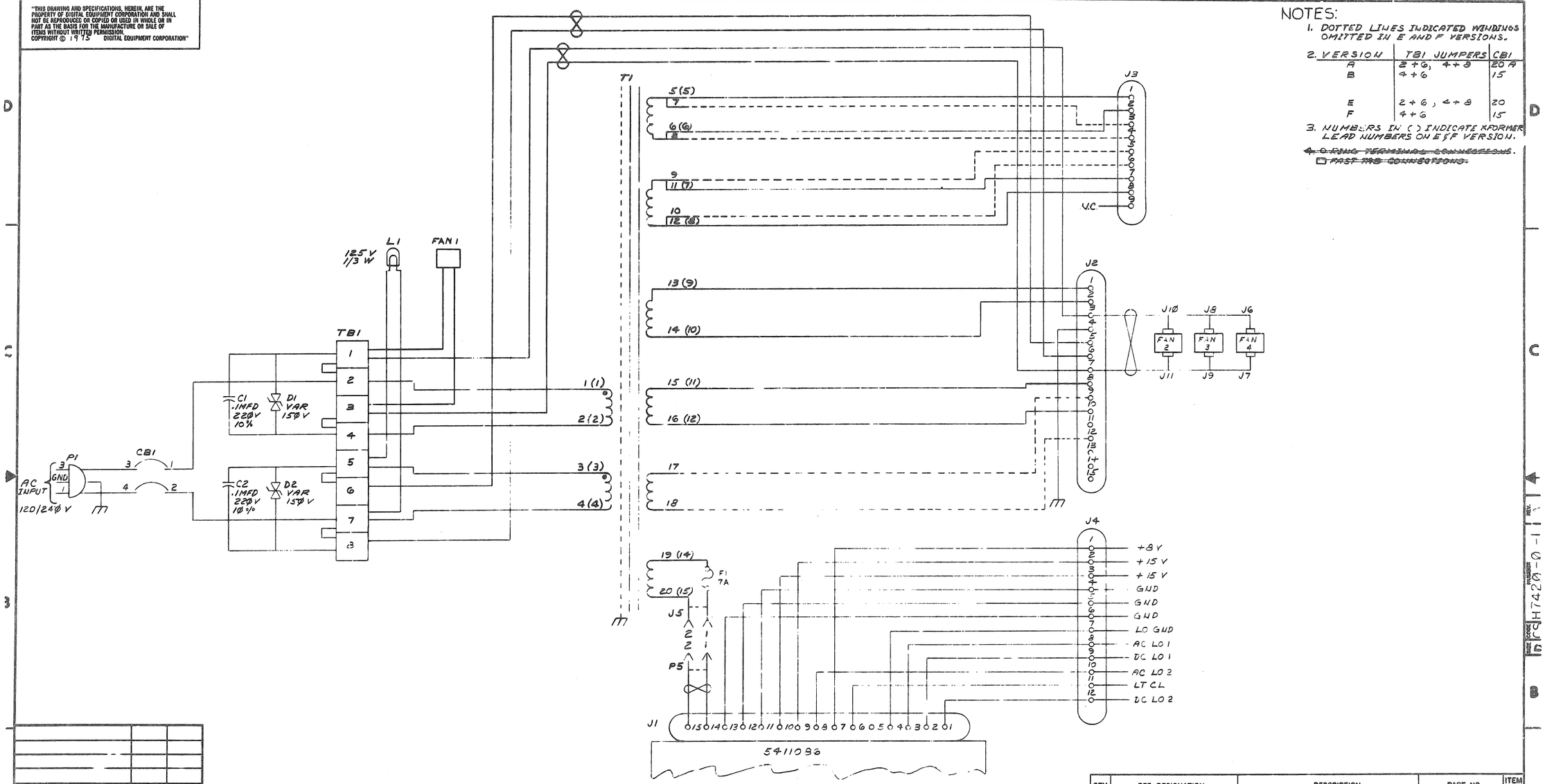

IC TYPE	GND	+5V
GND AND 5V ARE USUALLY PIN 7 AND 14 RESPECTIVELY EXCEPTIONS ARE STATED ABOVE		
IC PIN LOCATIONS		

FIRST USED ON OPTION MODEL
H7-12Ø

QTY	REF. DESIGNATION	DESCRIPTION	PART NO.	ITEM NO.
		PARTS LIST		

REV.	CHANGE NO.	CHK	REVISIONS
A	H742Ø-Ø-1		

DEC NO.	EIA NO.	DEC NO.	EIA NO.

SEMICONDUCTOR CONVERSION CHART

		DATE
DRN.	M. Kunce	1-17-75
CHK'D.	R. Gopahara	1-27-75
ENG.		
PROJ. ENG.		
PROD.		

NEXT HIGHER ASSY

SCALE

SHEET 1 OF

digital

TITLE WIRING DIAGRAM

SIZE	CODE	NUMBER	REV.
D	CS	H742Ø-Ø-1	A

DIST.

DEC FORM NO. DED 525.0

NOTES:

1. ~~R45, R46, C4, C9, & C11 ARE NOT USED ON BASIC SANDER BUT ARE RESERVED FOR PLANNED FUTURE MODULE VARIATIONS.~~
2. ** TOTAL +15V AND +8V CURRENT NOT TO EXCEED 40 AMPERES.
3. W1 (TEST JUMPER) MAYBE TEMPORARILY REMOVED WHILE TROUBLE-SHOOTING TO DETERMINE IF LOSS OF 15V IS DUE TO CROW-BAR CIRCUITRY. BUT MUST BE IN THE BOARD FOR NORMAL OPERATION.
4. ~~NON-ITEMIZED PARTS SUPPLIED BY TTL DIV.~~
4. YA VERSION DOES NOT CONTAIN +15VDC REG.
5. A) FOR STANDARD VERSION USE SHEETS 1,2,3,&4 OF THIS DWG.
   B) FOR YA VERSION USE SHEETS 1,2,&3 OF THIS DWG.
6. WIRES MUST NOT EXTEND BEYOND THE DIMENSIONS OF THE BOARD.
7. JUMPERS (W2,W3) ARE 1/2" EACH OF ITEM 97.

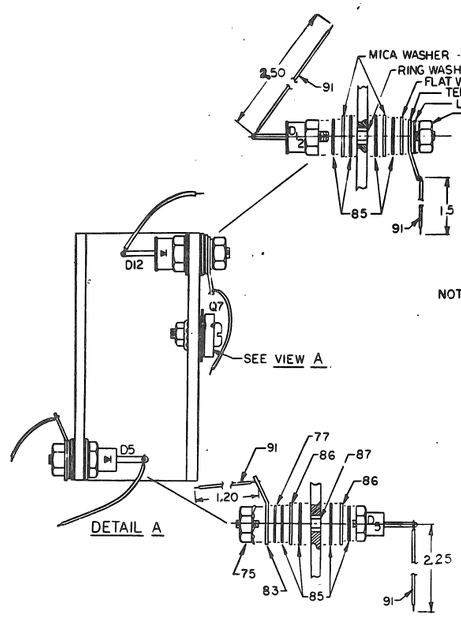

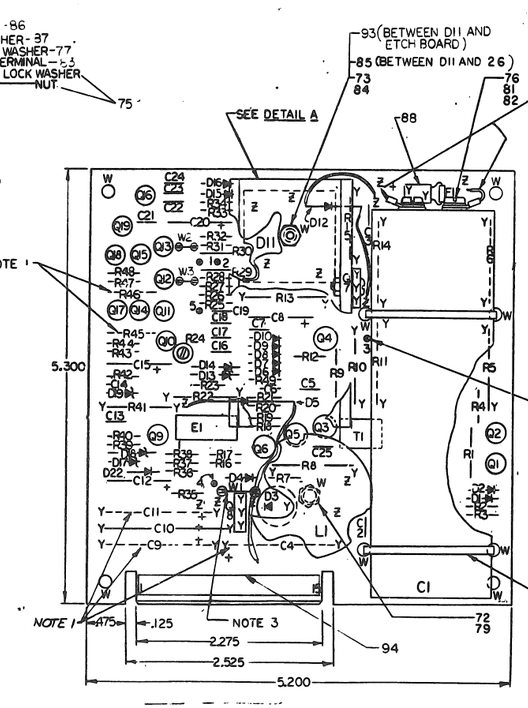

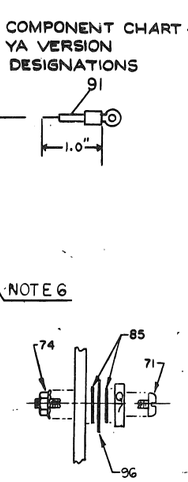

REF	REF		X-Y COORDINATE HOLE LOCATION	K-CO-5411086-0-4	1
REF	REF		ASSY/DRILLING HOLE LAYOUT	D-AH-5411086-0-5	2
REF	REF		MODULE ECO HISTORY	B-MH-5411086-0-6	3
1	1		ETCHED CIRCUIT BOARD	5011085	4
0	1	C2	CAPACITOR 50PF 100V 5%	1000012	5
4	4	C16,C17,C18,C21	CAPACITOR 330PF 100V 5%	1000023	6
3	5	C3,C13,C19,C22,C23	CAPACITOR .01uf 100V 20%	1001610-01	7
1	3	C6,C12,C15	CAPACITOR 2.2uf 35V 10%	1002431	8
2	2	C8,C26	CAPACITOR 10PF 100V 5%	1002008	9
1	1	C20	CAPACITOR 1.5uf 35V 10%	1009725	10
4	4	C5,C7,C14,C24	CAPACITOR .22uf 50V -20% +80%	1010274-0	11
0	1	C10	CAPACITOR 500uf 25V -10% +75%	1010509-01	12
1	1	C1	CAPACITOR 8400uf 50V -10% +75%	1010051	13
1	2	D2,D19	DIODE IN748A	1100122	14
0	1	D5	DIODE IN2970B	1100134	15
0	1	D3	DIODE MR1033B	1103341	16
7	8	D1,D6,D7,D8,D9,D15,D16,D22	DIODE D872	1105275	17
1	2	D10,D17	DIODE IN4744	1105648	18
0	1	D4	DIODE IN4004	1105798	19
0	1	D12	DIODE IN3600	1109440	20
0	1	D18	DIODE IN967A	1110068	21
~~2~~	~~2~~	~~D20,D21~~	~~DIODE MV3004-1 (LIGHT SWITCHING)~~	~~1110326~~	~~22~~
1	1	D11	DIODE BRIDGE 200V 20A	1110714	23
2	2	D13,D14	DIODE ITT2429	1110925	24
0	1	F1	FUSE PICO 5A	1205747	25
0	1		HEAT SINK	1211906	26
0	1	R23	RESISTOR 47 1/4W 5%	1300202	27
0	2	R7,R40	RESISTOR 100 1/4W 5%	1300229	28
0	1	R41	RESISTOR 100 1W 5%	1300232	29
1	3	R4,R12,R49	RESISTOR 220 1/4W 5%	1300271	30
0	1	R14	RESISTOR 220 2W 10%	1300278	31
0	1	R11	RESISTOR 680 2W 5%	1300348	32
2	2	R18,R20	RESISTOR 1K 1/4W 5%	1300365	33
0	1	R1	RESISTOR 1.5K 1/2W 5%	1300394	34
0	1	R10	RESISTOR 2.2K 1W 10%	1300420	35
1	1	R15,	RESISTOR 3.3K 1W 10%	1300437	36
0	1	R3	RESISTOR 3.3K 1/4W 5%	1300439	37
2	2	R43,R47	RESISTOR 10K 1/4W 5%	1300479	38
0	1	R37	RESISTOR 10 1/4W 5%	1301317	39
2	3	R2,R44,R48	RESISTOR 750 1/4W 5%	1301401	40
0	1	R38	RESISTOR 680 1/4W 5%	1301424	41
0	1	R16	RESISTOR 22K 1/4W 5%	1301800	42
1	1	R13	RESISTOR 1K 2W 5%	1301952	43
0	1	R9	RESISTOR 27 1/2W 5%	1302253	44
2	2	R19,R21	RESISTOR 30K 1/4W 5%	1302394	45
0	1	R36	RESISTOR 511 1/4W 1%	1302411	46
0	1	R39	RESISTOR 909 1/4W 1%	1302685	47
1	1	R25	RESISTOR 3.16K 1/4W 1%	1303045	48
1	1	R8	RESISTOR 470 2W 5%	1303062	49
1	2	R17,R28	RESISTOR 1K 1/4W 1%	1303114	50
1	1	R31	RESISTOR 2.61K 1/4W 1%	1303303	51
0	1	R42	RESISTOR 10K 1/4W 1%	1303312	52
2	2	R33,R34	RESISTOR 5.11K 1/4W 1%	1304054	53
1	1	R30	RESISTOR 9.09K 1/4W 1%	1304055	54
YA	QTY	REF. DESIGNATION	DESCRIPTION	PART NO.	ITEM NO.

PARTS LIST

ETCH BOARD REV. D

COMPONENT CHART - YA VERSION		
3	C19, C22, C23	7
1	C8	8
1	D19	14
7	D6, D7, D8, D9, D15, D16, D22	17
1	D10	18
1	R49	30
2	R44, R48	40
1	R28	50
4	Q3, Q5, Q10, Q19	63
4	Q11, Q12, Q13, Q16	66
QTY	REF. DESIGNATION	ITEM

IC TYPE	GND	+5V

GND AND 5V ARE USUALLY PIN 7 AND 14 RESPECTIVELY EXCEPTIONS ARE STATED ABOVE

IC PIN LOCATIONS

DEC NO.	EIA NO.	DEC NO.	EIA NO.

SEMICONDUCTOR CONVERSION CHART

FIRST USED ON OPTION MODEL

REV.	CHANGE NO.	CHK	
L	5411086-00007		A. BARON 7-29-77
K	5411086-00006		S. CARTER 17-JAN-77
J	5411086-00005		F. LOYA 14 JAN '76
H	5411086-00004		V. BOAEN 5-8-75
F	5411086-00003		V. BOAEN 4-16-75
E	5411086-00002		V. BOAEN 5-14-75
D	5411086-00001		V. BOAEN 6-6-75
C	ORIGINAL D		

REVISIONS

DRN. J. Vincent DATE 10-9-74
CHKD. DATE 10-7-74
ENG. DATE 10/8/74
PROJ. DATE 10/8/74
PROD. DATE 11/14/74
NEXT HIGHER ASSY
SCALE —
SHEET 1 OF 4

digital

TITLE PWR. LINE MONITOR/15V REG.

SIZE D CODE CS NUMBER 5411086-0-1 REV. L

DIST.

8 7 6 5 4 3 2 1

NOTES:

YA	QTY	REF DESIGNATION	DESCRIPTION	PART NO	ITEM NO
1	1	R29	RESISTOR 3.40K 1/4W 1%	1305114	95
1	1	R26	RESISTOR 5.02K 1/4W 1%	1305120	96
1	1	R27	RESISTOR 4.00K 1/4W 1%	1305324	97
0	1	R35	RESISTOR 24.0K 1/4W 1%	1305405	98
0	1	R24	RESISTOR 200 20% 02PR	1300150-10	99
1	1	R32	RESISTOR 10.2K 1/4W 1%	1309412	00
0	2	R5,R6	RESISTOR .2 5W 5% WW	1300004	01
0	1	Q7	TRANSISTOR MJE3055	1510555	02
4	6	Q2,Q3,Q5,Q8,Q18,Q19	TRANSISTOR MPSA05	1510705	03
0	2	Q4,Q9	TRANSISTOR MPS A55	1510706	04
0	1	Q6	TRANSISTOR 2N 4441	1505067	05
4	5	Q1,Q11,Q12,Q13,Q16	TRANSISTOR 2N 4250	1509142	06
4	4	Q14,Q15,Q17,Q10	TRANSISTOR 2N 5433	1511606	07
0	1	L1	INDUCTOR, 500 uh	1611000	08
1	1	T1	TRANSFORMER	1612028	09
0	1	E1	I.C. DEC 723	1910415	70
0	1		SCREW, PHM #4-40 X 7/16 LG.	9000012-1	71
0	1		SCREW, PHM #6-32 X 1/4 LG.	9000020-1	72
0	1		SCREW, PHM #6-32 X 7/8 LG.	9006027-1	73
0	1		KEP NUT #4-40	9006557	74
0	2		KEP NUT #10-32	9006508	75
2	2		WASHER, ITTLKWR #10	9006635	76
0	2		WASHER, FLAT	9006606	77
0	2	(W1)	SPLIT LUG	9006735	78
0	1		SPACER, 1/4AF X 1/2	9006861	79
4	4		CABLE TIE	9007000	80
2	2		TERMINAL	9007200	81
2	2		SCREW, PHM #10-32 X 1/4 LG.	9000007-1	82
0	2		TERMINAL	9006150	83
0	1		KEP NUT #6-32	9006165	84
0	A/R		COMPOUND, THERMAL JOINT	9008260	85
0	4		WASHER, THERMA FILM	9008424	86
0	2		WASHER, RING	9008440	87
0	1		FUSE HOLDER	9009141	88
1	1	R22	RESISTOR, 330, 2W 10%	1301880	89
0	1	W1	JUMPER	9009185	90
2	12		WIRE #18 STRANDED BLK	9107300-0-0	91
REF	REF		MODULE TEST PROCEDURE	A-SP-1145-TA-2	92
1	1		WASHER, RING	9006713	93
1	1		.010 INCH SHIM	7413721-0-0	94
REF	REF		ENG. SPEC-AND TEST PROC.	A-SP-5411086-0-3	95
0	1		INSULATOR, THERMA FILM	9009597	96
A/R	A/R	W2,W3	WIRE #22 BLK	9107500-[illegible]	97

FIRST USED ON OPTION MODEL

PARTS LIST

ETCH BOARD REV D

IC TYPE	GND	+ 5V

GND AND 5V ARE USUALLY PIN 7 AND 14 RESPECTIVELY EXCEPTIONS ARE STATED ABOVE

IC PIN LOCATIONS

REVISIONS

CHANGE NO	REV

CHK

DEC NO.	EIA NO.	DEC NO.	EIA NO.

SEMICONDUCTOR CONVERSION CHART

DRN. J. Vincent DATE 10-9-74
CHK'D. [illegible] DATE 10-10-74
ENG. [illegible] DATE 10/12/74
PROJ. ENG. [illegible] DATE 10/17/74
PROD. [illegible] DATE 10/21/74
NEXT HIGHER ASSY
SCALE
SHEET 2 OF 4

digital EQUIPMENT CORPORATION MAYNARD, MASSACHUSETTS

TITLE PWR. LINE MONITOR/15V REG.

SIZE	CODE	NUMBER	REV.
D	CS	5411086-0-1	L

DIST.

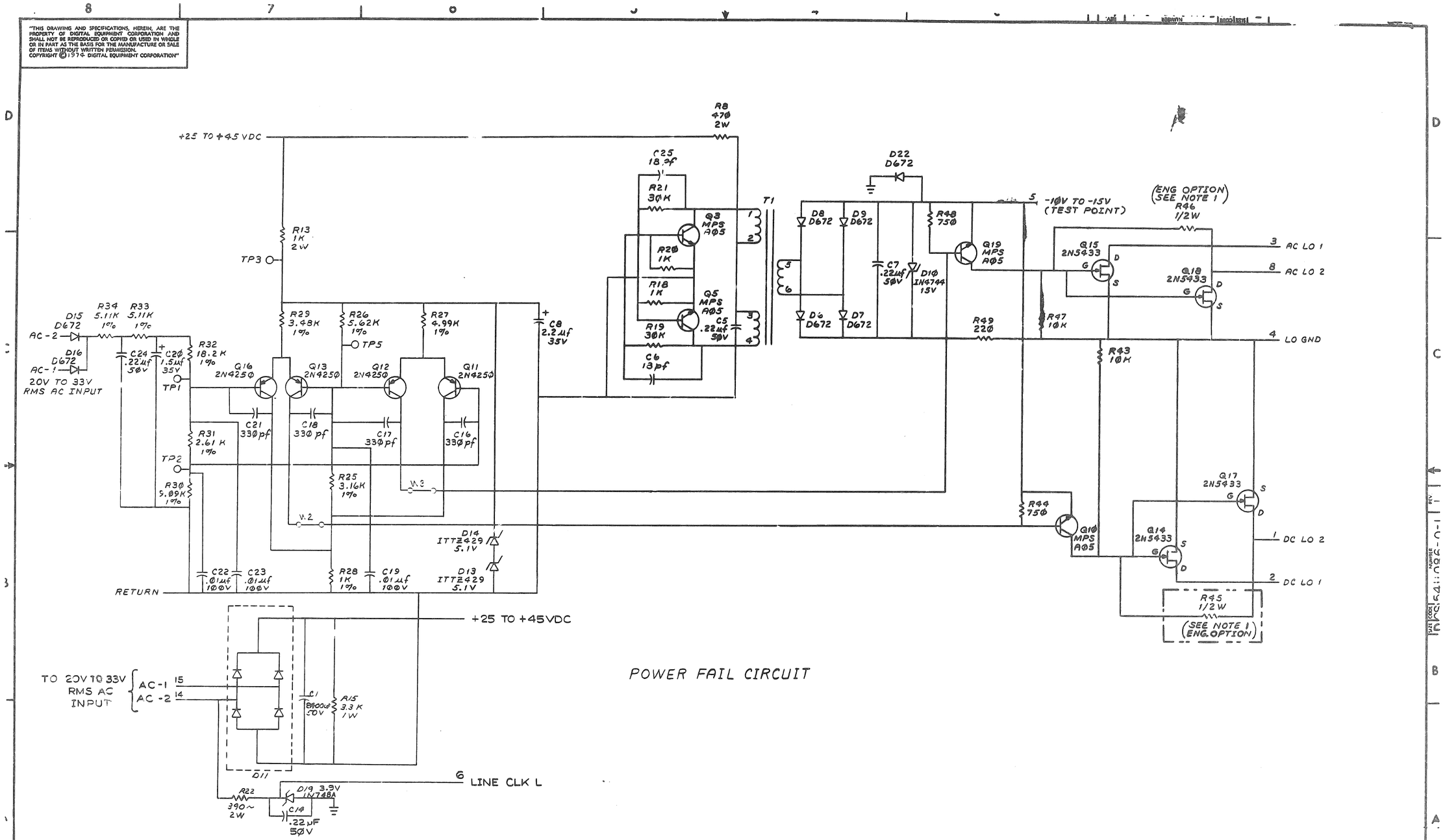

REVISIONS		
CHK	CHANGE NO.	REV.

TITLE	SIZE	CODE	NUMBER	REV.
PWR. LINE MONITOR/15V REG.	D	CS	5411086-0-1	L
SCALE	SHEET 3 OF 4	DIST.		

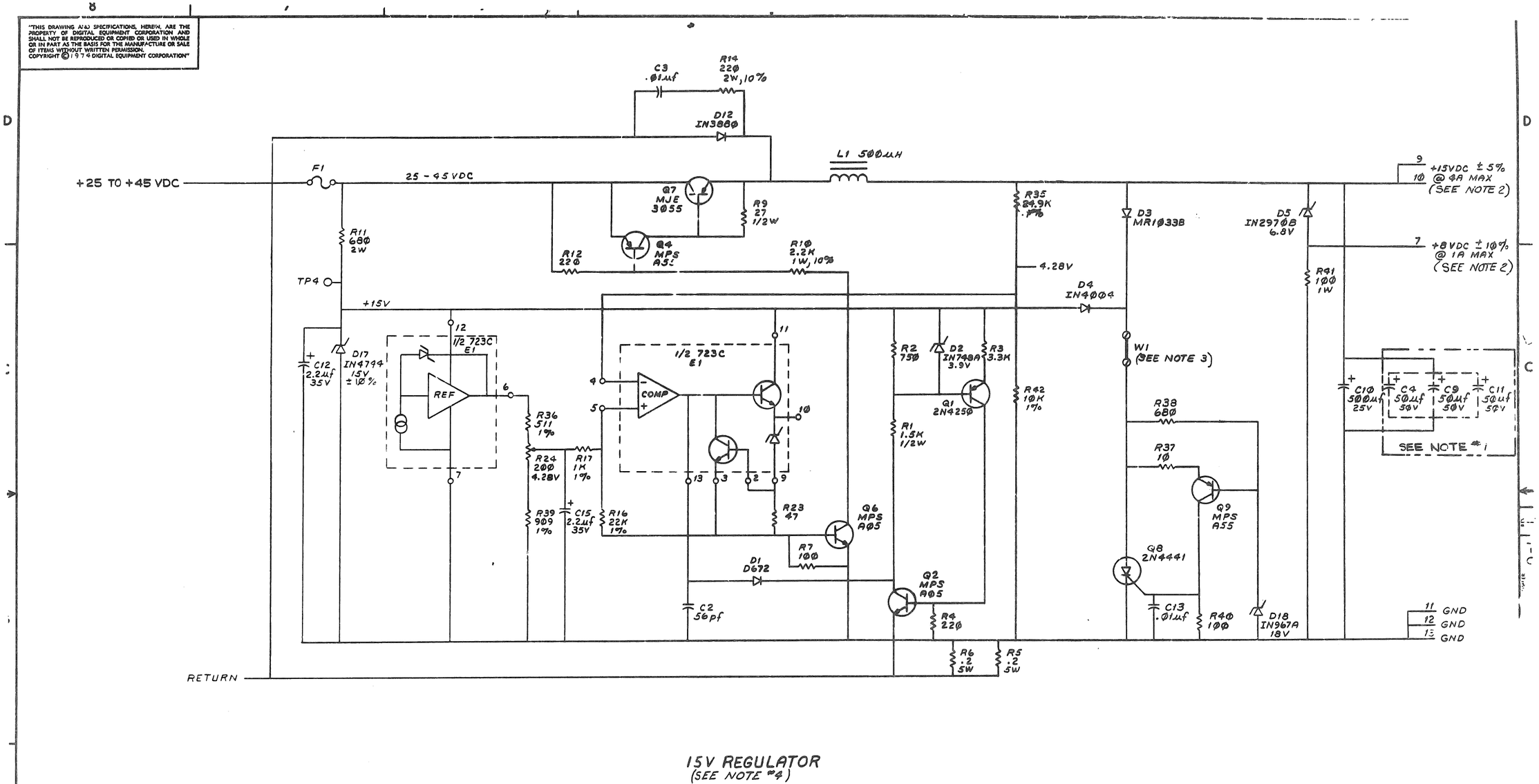

15V REGULATOR
(SEE NOTE #4)

REVISIONS		
CHK	CHANGE NO.	REV.

TITLE	SIZE	CODE	NUMBER	REV.
PWR. LINE MONITOR/15V REG.	D	CS	5411086-0-1	
SCALE --/--/-- SHEET 4 OF 4	DIST.			

DEC FORM NO DRD 130

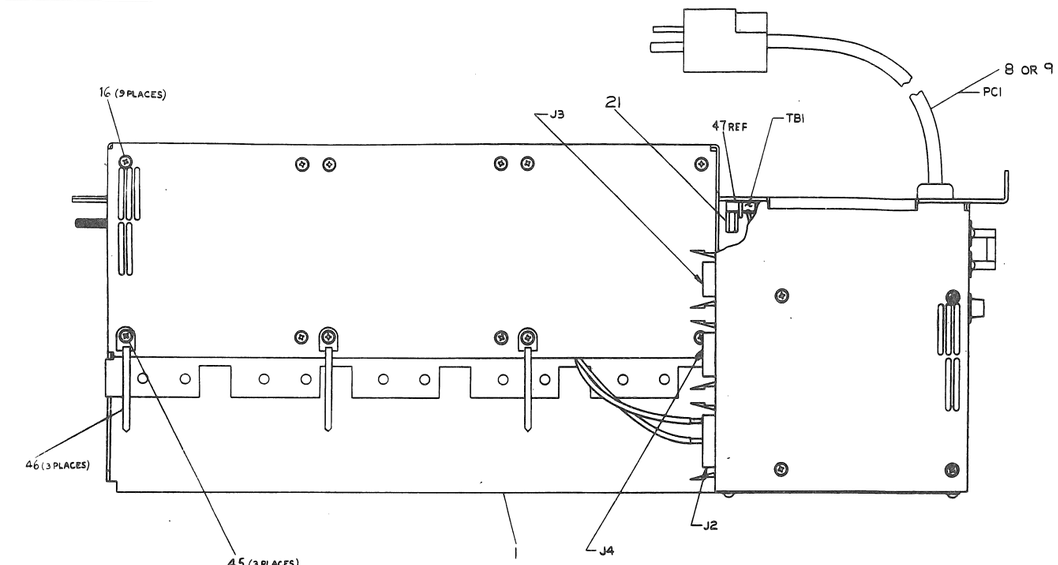

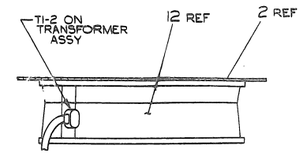

SECTION D-D
SCALE: NONE

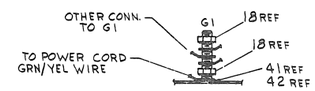

DETAIL B
SCALE: NONE

NOTES:

1. AFTER TERMINAL BLOCK (PART OF TRANSFORMER ASSEMBLY) IS MOUNTED TO CHASSIS, CAPACITOR AND VARISTOR SHOULD BE BENT FORWARD TO ALLOW CLEARANCE FOR COVER.
2. ~~REV. D AND EARLIER TRANSFORMERS DO NOT HAVE THIS WIRE. H7420 E+F ONLY.~~
3. FILLER PANELS (D-IA-7413405-0-0) MAY BE USED IN UNFILLED REGULATOR SLOTS (REF).
4. CABLE TIE MOUNTS TO BE MOUNTED AFTER TRANSFORMER ASSEMBLY IS INSTALLED.
5. ~~H7420 A+B ONLY.~~
6. ~~H7420 E+F ONLY.~~
7. REMOVE PAINT MASK, APPLY CONDUCTIVE GREASE ITEM 42, PLACE ITEM 41 8-32 EXT TOOTH WASHER NEXT TO CHASSIS BEFORE INSTALLING REMAINING HARDWARE. DO THIS AT G1 AND G2. MAKE SAFTEY GROUND CONNECTIONS PER DETAIL B.

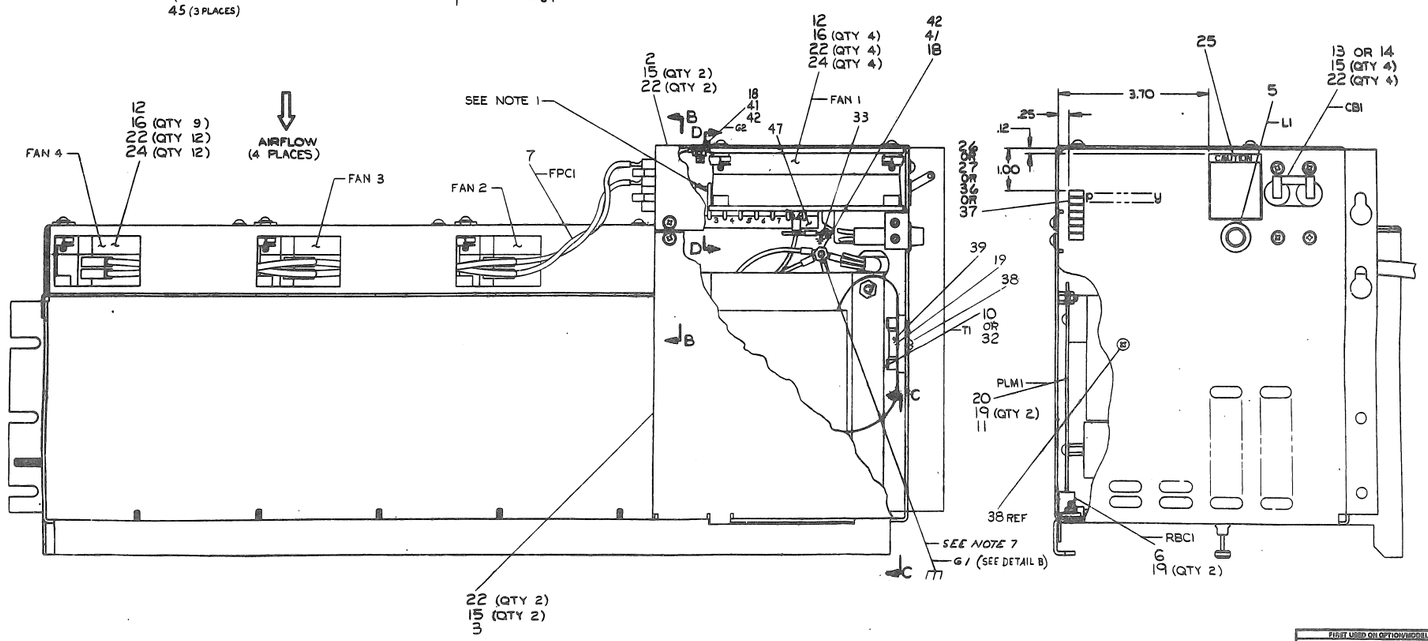

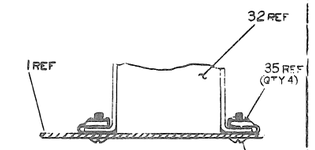

SECTION C-C
SCALE: NONE

FIRST USED ON OPTION/MODEL	FOR PARTS LIST REFER TO A-PL-H7420-0-0
H7420	QTY. / DESCRIPTION / PART NO. / REF DES NO. — PARTS LIST

DIMENSIONAL TOLERANCE: DIMENSIONS ARE [redacted] UNLESS OTHERWISE SPECIFIED

	DECIMAL	ANGLES
[redacted]	XXX ±.005 XX ±.03 X ±.1	00° 30'

THIRD ANGLE PROJECTION

[redacted]

MATERIAL: SEE PARTS LIST
FINISH: —

DRAWN	R. WOLF	DATE 12-19-72
CHECK.	[illegible]	DATE 2-4-73
APP.	[illegible]	DATE 3/12/73
PROD.	[illegible]	DATE 3/
FINAL APP.	[illegible]	DATE 3/

NEXT HIGHER ASSY. B-DD-H7420-0

SCALE 1/1 SHEET 1 OF 1

digital

TITLE: H7420 POWER SUPPLY

SIZE	CODE	NUMBER	REV.
E	JA	H7420 0-0	H

DIST.

REV.	DESCRIPTION	DATE	APPROVED
A	[illegible]	12-19-72	R. WOLF
B	[illegible]	2-2-73	R. WOLF
C	[illegible]	2-23-73	R. WOLF
D	[illegible]	3-12-73	R. WOLF

DO NOT SCALE DRAWING

WIRE TABLE

ITEM NO	DESCRIPTION AWG	COLOR	FROM CONNECTION	TO CONNECTION	REMARKS
10	++	++	T1-J5	RBC1-P5	
	14	GRN	T1-1	@1	SEE NOTE 2&7
	++	BLK	T1-2	FAN1-1 & 2	
	14	WHT	T1-3	CB1-1	
	14	GRN	T1-4	G1	SEE NOTE 7
10	14	BLK	T1-5	CB1-2	
5	22	BLK	L1-1	TB1-5	
5	22	BLK	L1-2	TB1-7	
7	18	RED	FPC1-J6	FAN 4-1	
		WHT	FPC1-J7	FAN 4-2	
		RED	FPC1-J8	FAN 3-1	
		WHT	FPC1-J9	FAN 3-2	
		RED	FPC1-J10	FAN 2-1	
		WHT	FPC1-J11	FAN 2-2	
		RED	FPC1-1	J2-3	
7	18	WHT	FPC1-2	J2-7	
8/9	14	BRN	PC1-1	CB1-4	
8/9	14	GRN/YEL	PC1-2	G1	SEE NOTE 7
8/9	14	BLU	PC1-3	CB1-3	
11	++	++	PLM1	RBC1-J1	
10	14	GRN/YEL	T1-6	G1	SEE NOTE 7
10	14	GRN/YEL	T1-7	G2	SEE NOTE 7

JUMPER TABLE

ITEM NO	DESCRIPTION AWG	COLOR	FROM CONNECTION	WITH	TO CONNECTION	WITH	VARIATION
29	14	BLK	TB1-2		TB1-6		H7420 E & A
29	14	BLK	TB1-4		TB1-8		
29	14	BLK	TB1-4		TB1-6		H7420 F, & B

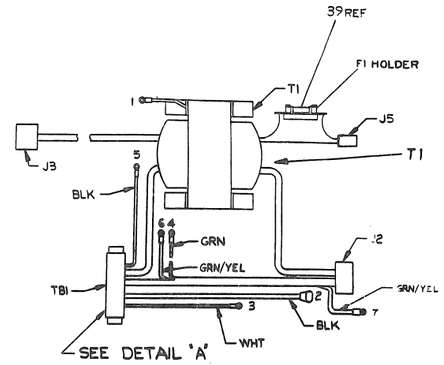

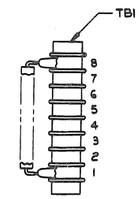

DETAIL 'A'
SCALE: NONE

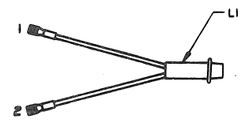

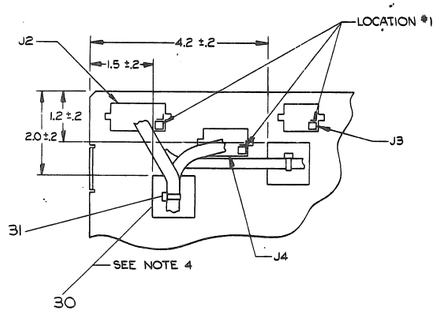

SECTION B-B
SCALE: NONE

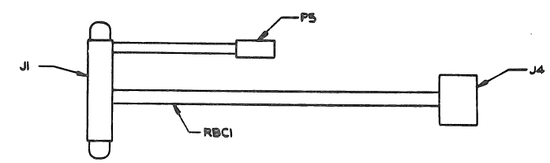

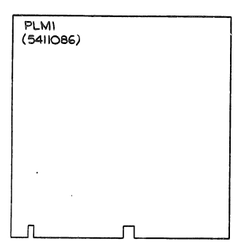

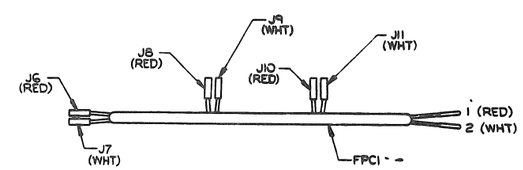

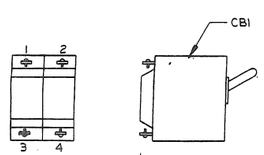

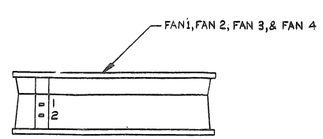

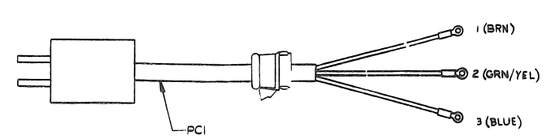

REVISIONS		
CHK	CHANGE NO.	REV.

TITLE H7420 POWER SUPPLY
SIZE E CODE JA NUMBER H7420-2-2 REV -1
SCALE NONE SHEET 2 OF
DIST.

DIGITAL EQUIPMENT CORPORATION
MAYNARD, MASSACHUSETTS
PARTS LIST

MADE BY R. THELLEN	CHECKED P. CAPPABIANCA	SECTION 1	
DATE 1/17/75	DATE 2/3/75		
ENG R. WOLF	PROD J. BORENSTEIN	ISSUED SECT. 1	
DATE 2/3/75	DATE 2/3/75		

ITEM NO.	DWG NO./PART NO.	DESCRIPTION	H742Ø-A	H742Ø-B	H742Ø-H
1	E-IA-7010501-0-0	CHASSIS (H742Ø)	-	1	1
2	D-MD-7412459-0-0	COVER, CONTROL BOX	1	1	1
3	D-IA-7412461-0-0	BRKT, P.C. BOARD MTG.	1	1	1
~~4~~	~~C-IA-7413133-0-0~~	~~PLATE, ADAPTER (H742Ø)~~			
5	C-IA-7010730-0-0	POWER INDICATOR ASSEMBLY	1	1	1
6	D-IA-7010729-0-0	CABLE, REGULATOR BOARD	1	1	1
7	D-IA-7010728-0-0	CABLE, FAN POWER	1	1	1
8	C-IA-7010727-1-0	POWER CORD ASSY (120V)	1	-	-
9	C-IA-7010727-2-0	POWER CORD ASSY (240V)	-	1	-
10	C-IA-7010727-5-0	POWER CORD ASSY (120V)	-	-	1
11	D-CS-5411086-0-1	POWER LINE MONITOR	1	1	1
12	1209403-01	FAN	4	4	4
~~13~~	~~1210191-06~~	~~CIRCUIT BREAKER (20A)~~	~~-~~	~~-~~	
~~14~~	~~1210191-03~~	~~CIRCUIT BREAKER (15A)~~	~~-~~	~~-~~	
15	9006020-01	SCR,PHL PAN HAD #6-32 x .25	8	8	8
16	9006025-01	SCR,PHL PAN HD #6-32 x .62	13	13	13
~~17~~	~~9006565-00~~	~~NUT,KEP #8-32~~	~~-~~	~~-~~	
18	9006563-00	NUT,KEP #8-32	3	3	3
19	9008185-00	NUT,KEP #6-32	5	5	5
20	9006840-00	SPACER, #6-32 x .19	2	2	2
21	9006851-00	SPACER, #6-32 x .50	2	2	2
22	9006633-00	WASHER, INT. TOOTH LOCK #6	24	24	24

TITLE	ASSY NO.	SIZE	CODE	NUMBER	REV.	ECO NO.
POWER SUPPLY H742Ø	E-UA-H742Ø-Ø-Ø	A	PL	H742Ø-Ø-Ø	H	H7420-00009
	SHEET 1 OF 3	DIST.				

DEC FORM DEC 16-(325)-1031-N870
DRA 110

DIGITAL EQUIPMENT CORPORATION
MAYNARD, MASSACHUSETTS
PARTS LIST

MADE BY R. THELLEN	CHECKED P.CAPPABIANCA	SECTION 1	
DATE 17-JAN-75	DATE 3-FEB-75		
ENG R. WOLF	PROD J. BORENSTEIN	ISSUED SECT. 1	
DATE 3-FEB-75	DATE 3-FEB-75		

ITEM NO.	DWG NO./PART NO.	DESCRIPTION	H742Ø-A	H742Ø-B	H742Ø-H
45	9006026-1	SCR PH PAN HD #6-32 x 3/4	3	3	3
46	9007033	TIE CABLE	3	3	3
47	9006933	BLOCK, TERM MARKER STRIP	1	1	1

TITLE	ASSY NO.	SIZE	CODE	NUMBER	REV.	ECO NO.
POWER SUPPLY H742Ø	E-UA-H742Ø-Ø-Ø	A	PL	H742Ø-Ø-Ø	H	
	SHEET 3 OF 3	DIST.				

DEC FORM DEC 16-(325)-1031-N870
DRA 110

DIGITAL EQUIPMENT CORPORATION
MAYNARD, MASSACHUSETTS
PARTS LIST

MADE BY R. THELLEN	CHECKED P. CAPPABIANCA	SECTION 1	
DATE 1/17/75	DATE 2/3/75		
ENG R. WOLF	PROD J. BORENSTEIN	ISSUED SECT. 1	
DATE 2/3/75	DATE 2/3/75		

ITEM NO.	DWG NO./PART NO.	DESCRIPTION	H742Ø-A	H742Ø-B	H742Ø-H
~~23~~	~~9008503-00~~	~~RELIEF, STRAIN~~	~~2~~	~~2~~	
24	9009165-00	CLIP, FAN MOUNTING	16	16	16
25	A-DC-7413184-0-0	POWER SUPPLY DECAL (H742Ø)	1	1	1
26	7420763-0-0	POWER SUPPLY DECAL (H742Ø[illegible])	-	-	1
~~27~~	~~A-DC-7413185-0-0~~	~~POWER SUPPLY DECAL (H742Ø[illegible])~~			
~~28~~	~~9007869-00~~	~~TERMINAL, SPADE COMPRESS~~	~~-~~	~~-~~	
29	7014353	JUMPER	2	1	2
30	9008264-00	MOUNT, CABLE TIE, ADHESIVE	2	2	2
31	9007880-00	TIE, CABLE	2	2	2
32	D-IA-7011211-0-0	TRANSFORMER ASSY	1	1	1
33	3612680-01	SAFETY GROUND DECAL	1	1	1
34	9006074-3	SCR, PH. HD. TRUSS 10x32x5/8	4	4	4
35	9006586	TINNERMAN SPEED NUT 10-32	4	4	4
36	A-DC-7413966-0-0	POWER SUPPLY DECAL (H742ØA)	1	-	-
37	A-DC-7413967-0-0	POWER SUPPLY DECAL (H742ØB)	-	1	-
38	9006021-1	SCR. PAN HD. 6-32x5/16	1	1	1
39	9007224	FUSE 7 AMP SLOW BLOW	1	1	1
~~40~~	~~9009768-01~~	~~RELIEF, STRAIN~~	~~2~~	~~2~~	
41	9008072	8-32 WASHER EXT. TOOTH	1	1	1
42	4901173-01	CONDUCTIVE GREASE	A/R	A/R	A/R
43	1212124-01	CIRCUIT BREAKER (20A)SCREW TERM	1	-	1
44	1212124-02	CIRCUIT BREAKER (15A)SCREW TERM	-	1	-

TITLE	ASSY NO.	SIZE	CODE	NUMBER	REV.	ECO NO.
POWER SUPPLY H742Ø	E-UA-H742Ø-Ø-Ø	A	PL	H742Ø-Ø-Ø	H	
	SHEET 2 OF 3	DIST.				

DEC FORM DEC 16-(325)-1031-N870
DRA 110

DRAWING DIRECTORY

CUSTOMER PRINT SET

DRAWING DIRECTORY	B-DD-H744-0
CIRCUIT SCHEMATIC	D-CS-H744-0-1
UNIT ASSY	E-UA-H744-0-0

MFG SET

TEST PROCEDURE	A-SP-H744-0-3
MFG SPEC	A-SP-H744-0-8
PACKAGING INST	A-PI-3700074-0-0

UNIT VARIATIONS

VAR	TITLE
H744	+5V REGULATOR
H744-YA	2.0 - 8.0V VARIABLE REGULATOR

REVISIONS			
CHK	CHANGE NO.	REV.	
G.P.	00019	R	
JA	00020	S	

USED ON OPTION/MODEL	
11/45	

SHEET 1 OF 4

DRN. D.FONTAINE	DATE 2-4-72	TITLE +5V REGULATOR
CHK'D. D.FONTAINE	DATE 2-4-72	digital
PROJ. ENG. G.POTTER	DATE 2-24-72	SIZE B · CODE DD · NUMBER H744-0 · REV S
PROD. A.HIRSCH	DATE 2-24-72	DIST.

SIZE CODE B DD | NUMBER H744-Ø | REV. S

DRAWING NO.	NO. OF SHTS	PART NO.	DESCRIPTION	REVISIONS		
D-AH-H744-Ø-5			ASSY DRILLING/HOLE LAYOUT	Y	Y	Y
E-UA-H744-Ø-Ø	1		UNIT ASSY	Y	Z	AA
D-CS-H744-Ø-1	1		CIRCUIT SCHEMATIC	Y	Y	Y
B-MH-H744-Ø-6	4		MODULE ECO HISTORY	AD	AE	AE
		5009725	ETCHED BOARD	H	H	H
A-SP-H744-Ø-3			TEST PROCEDURE	REF		REF
A-SP-H744-Ø-8			MFG SPEC	REF		REF
D-PS-1210737-Ø-Ø	1		HEAT SINK	REF		REF
D-IA-5309756-Ø-Ø	1		REGULATOR BRK'T	REF		REF
C-MD-5309760-Ø-Ø	1		COMPONENT COVER	REF		REF
C-MD-5309759-Ø-Ø	1		CAPACITOR STRAP	REF		REF
A-PI-3700074-Ø-Ø	2		PACKAGING INSTRUCTION	REF		REF
A-PS-9905211-Ø-Ø	2		OUTER CARTON	REF		REF
A-PS-9905212-Ø-Ø	2		INNER PACKAGING	REF		REF
C-IA-7412388-Ø-Ø			2.5 CAP HOLDER	REF		REF
C-MD-7419952-Ø-Ø			COMPONENT COVER	REF		

NOTES:

REVISIONS		
REV.		R	S
CHG NO.	00018	00019	00020
DATE		2-77	3-78

digital

USED ON OPTION/MODEL	
11/45	

DRN.	D. FONTAINE	2-4-72
CHK'D	D. FONTAINE	2-4-72
ENG.	G. POTTER	2-24-72
PROD.	A. HIRSCH	2-24-72

TITLE +5V REGULATOR

SIZE B | CODE DD | NUMBER H744-Ø | REV. S

SHEET 2 OF 4

DRAWING NO.	NO. OF SHTS	PART NO.	DESCRIPTION	REVISIONS	
D-AH-H744-Ø-5			ASSY DRILLING/HOLE LAYOUT	Y	Y
E-UA-H744-Ø-Ø	1		UNIT ASSY	W	W1
D-CS-H744-Ø-1	1		CIRCUIT SCHEMATIC	W	W1
B-MH-H744-Ø-6	4		MODULE ECO HISTORY	AC	AE
		5009725	ETCHED BOARD	H	H
A-SP-H744-Ø-3			TEST PROCEDURE	REF	
A-SP-H744-Ø-8			MFG SPEC	REF	
D-PS-1210737-Ø-Ø	1		HEAT SINK	REF	
D-IA-5309756-Ø-Ø	1		REGULATOR BRK'T	REF	
C-MD-5309760-Ø-Ø	1		COMPONENT COVER	REF	
C-MD-5309759-Ø-Ø	1		CAPACITOR STRAP	REF	
A-PI-3700074-Ø-Ø	2		PACKAGING INSTRUCTION	REF	
A-PS-9905211-Ø-Ø	2		OUTER CARTON	REF	
A-PS-9905212-Ø-Ø	2		INNER PACKAGING	REF	
C-IA-7412388-Ø-Ø			2.5 CAP HOLDER	REF	
C-MD-7419952-Ø-Ø			COMPONENT COVER	REF	

NOTES:

REVISIONS		
REV.		R
CHG NO.	00017	00019
DATE		2-77

digital

USED ON OPTION/MODEL	
11/45	

DRN.	D. FONTAINE	2-4-72
CHK'D	D. FONTAINE	2-4-72
ENG.	G. POTTER	2-24-72
PROD.	A. HIRSCH	2-24-72

TITLE: +5V REGULATOR

SIZE	CODE	NUMBER	REV.
B	DD	H744-Ø	S

SHEET 3 OF 4

SIZE CODE B DD NUMBER H744-Ø REV. S

SIZE B CODE DD NUMBER H744-Ø REV. S

DRAWING NO.	NO. OF SHTS	PART NO.	DESCRIPTION	REVISIONS	
D-AH-H744-Ø-5			ASSY DRILLING/HOLE LAYOUT	Y	Y
E-UA-H744-Ø-Ø	1		UNIT ASSY	V	V1
D-CS-H744-Ø-1	1		CIRCUIT SCHEMATIC	W	W1
B-MH-H744-Ø-6	4		MODULE ECO HISTORY	AB	AE
		5009725	ETCHED BOARD	H	H
A-SP-H744-Ø-3			TEST PROCEDURE	REF	
A-SP-H744-Ø-8			MFG SPEC	REF	
D-PS-1210737-Ø-Ø	1		HEAT SINK	REF	
D-IA-5309756-Ø-Ø	1		REGULATOR BRK'T	REF	
C-MD-5309760-Ø-Ø	1		COMPONENT COVER	REF	
C-MD-5309759-Ø-Ø	1		CAPACITOR STRAP	REF	
A-PI-3700074-Ø-Ø	2		PACKAGING INSTRUCTION	REF	
A-PS-9905211-Ø-Ø	2		OUTER CARTON	REF	
A-PS-9905212-Ø-Ø	2		INNER PACKAGING	REF	
C-IA-7412388-Ø-Ø			2.5 CAP HOLDER	REF	
C-MD-7419952-Ø-Ø			COMPONENT COVER	REF	

NOTES:

REVISIONS		
DATE	CHG NO.	REV.
2-77	00016	
	00019	R

digital

USED ON OPTION/MODEL: 11/45

DRN.	D. FONTAINE	2-4-72
CHK'D	D. FONTAINE	2-4-72
ENG.	G. POTTER	2-24-72
PROD.	A. HIRSCH	2-24-72

TITLE: +5V REGULATOR

SIZE B CODE DD NUMBER H744-Ø REV. S

SHEET 4 OF 4

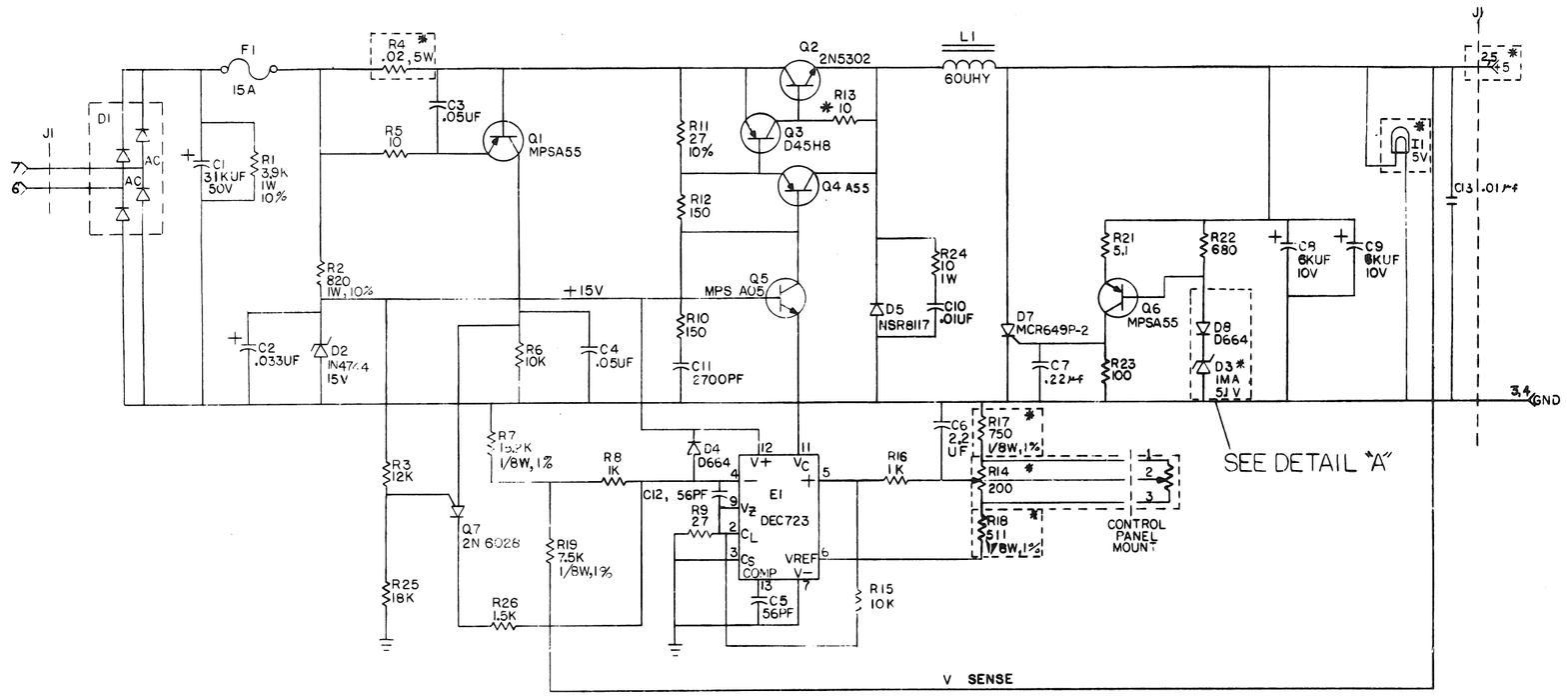

*FUSIBLE RESISTOR

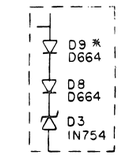

DETAIL A
FOR YA VARIATION ONLY

(*) FOR YA VARIATION COMPONENT VALUES ARE AS FOLLOWS:
R4 - .06 5W
R14 - 1K 10 TURN
R17 - 300 1/8W 1%
R19 - 150 1/4W 5%
D3 - IN754
I1 - 15V
J1-2,5 - +2.0-8.0V

* D9 - D664 ADDED FOR YA VARIATION ONLY

UNLESS OTHERWISE INDICATED:
RESISTORS ARE 1/4W, 5%

QTY	REF DESIGNATION	DESCRIPTION	PART NO.	ITEM NO.

PARTS LIST

ETCH BOARD REV F H

DEC NO.	EIA NO.	DEC NO.	EIA NO.
IN964A	SAME	MPSA55	
D664	IN3606	2N5302	
MCR649P-2		D45H8	
IN754A	SAME	MPSA05	
IN4744	SAME		
NSR8117			
2N6028			

SEMICONDUCTOR CONVERSION CHART

CHK	CHANGE NO.	REV	REVISIONS
	H744-00001	E	G.POTTER 1-14-72
	H744-C2002	F	G.POTTER 11-22-72
	H744-00003	H	G. POTTER 2-27-72
	H744-00004	J	G.POTTER 5/11/72
	H744-00005	K	S. Blank 10-5-72
	H744-00006	L	J.W. LAWRENCE 11/6/72
	H744-00007	M	R. WILLF 8-24-73
	H744-00008	N	D.MARTEL 11-7-73
	H744-00010	P	D.MARTEL 1-7-75
	H744-00011	R	D.MARTEL
	H744-00012	S	A.BARON
	H744-00013	T	KISARGENT 7-2-75
	H744-00014	U	A.BARON 5-20-76
	H744-00015	V	A.BARON
	H744-00016	W	H.SANDMORE 5-5-76
	H744-00017	X	A.BARON 7-16-75

DRN. Frank Bourque DATE 11-2-71
CHK'D. Nancy Hoke DATE 11-3-71
ENG. DATE 1/3/72
PROJ. ENG. DATE 1/5/72
PROD. DATE 11/3/72
NEXT HIGHER ASSY
SCALE
SHEET 1 OF 1

digital EQUIPMENT CORPORATION MAYNARD, MASSACHUSETTS

TITLE 5V REGULATOR

SIZE	CODE	NUMBER	REV.
D	CS	H744 -0-1	

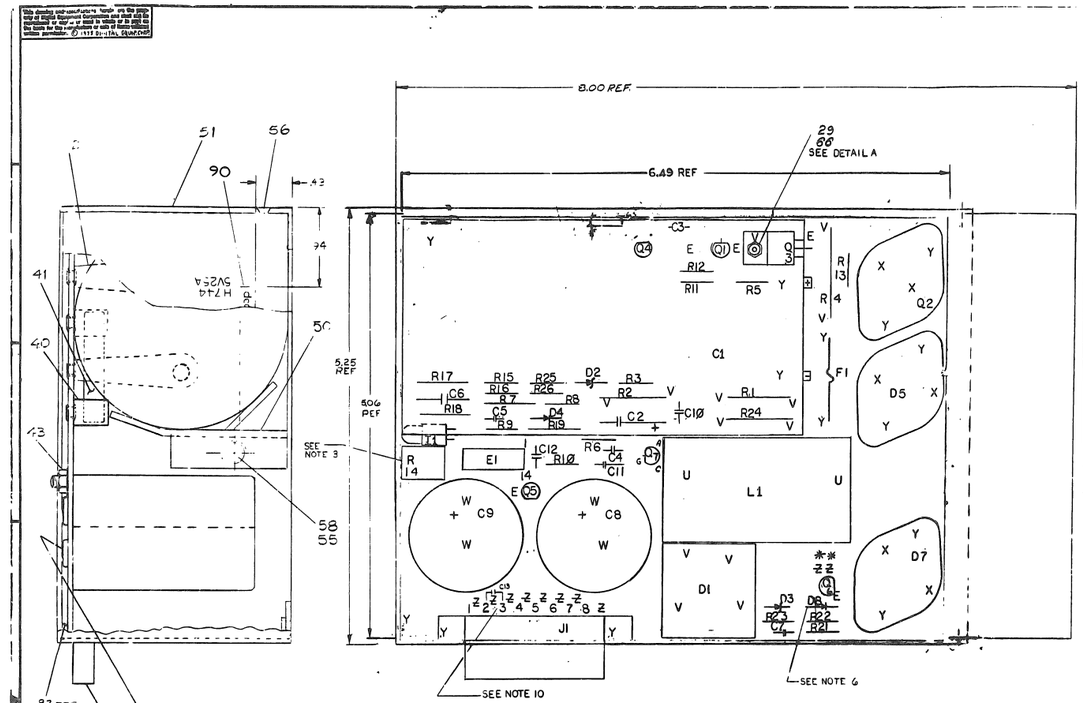

NOTES:

1. APPLY ITEM #63 (COMPOUND) BETWEEN TRANSISTOR (Q2), DIODES (D5, D7) AND ITEM #44 (WASHER) ALSO BETWEEN ITEM #44 (WASHER) AND HEAT SINK (ITEM #5). ALSO APPLY ITEM #63 (COMPOUND) BETWEEN ITEM #9 (DIODE BRIDGE) AND ITEM #64 (HEAT SINK BRIDGE).

QTY	QTY.	REF DESIGNATION	DESCRIPTION	PART NO.	ITEM
1	1	R22	RES 680 1/4W 5%	1301424	69
1	1		PACKING INSTRUCTIONS	API 3700074-0-0	70
1	1		SCR, PHL PAN HD #6-32 × 5/8 LG	9006025-1	71
1	Ø	I1	15 VOLT LAMP	1209169	72
4	4		LOCKWASHER #10 INT	9006635	73
A/R	A/R		~~PERMABOND 101 LOCTITE~~	~~9000867~~	~~74~~
A/R	A/R		~~TCP TUBING~~	~~9102302-11~~	~~75~~
A/R	A/R		~~TCP TUBING~~	~~9102302-11~~	~~76~~
1	1	Q4	~~TRANSISTOR 2N1132~~	~~1800346~~	~~77~~
A/R	A/R		~~SOLDER SEC-4 WIRE~~	~~PROPRIETARY~~	~~78~~
1	Ø	12 IN.	WIRE, MICRODOT	1700014	79
1	Ø		CLAMP, CABLE	9007079	80
1	Ø	R14	POT, 10 TURN, 1KΩ	1309532-04	81
1	Ø	R17	RES, 300Ω 1/4W 5%	1301425	82
1	Ø	R18	RES, 150Ω 1/4W 5%	1300250	83
1	Ø	R4	RES, 06Ω 5W 3%	1310876-02	84
1	Ø	D3	DIODE ZENER 1N754	1109991	85
6	6	-	WASHER, INT TOOTH #4	9006632	86
1	1	C7	CAP .22μf 50V	1010274	87
1	1	R13	RES 10 1/4W 5% FUSIBLE	1312496	88
1	1	-	WASHER, RECTANGULAR	9009769	89
1	1	-	DECAL (H744)	A00741694 5-1-0	90
1	1	-	JUMPER	1214074	91
1	Ø	-	COVER, BOTTOM	7619952	92
2	Ø	-	WASHER, FIBER	9008848	93

QTY	QTY.	REF DESIGNATION	DESCRIPTION	PART NO.	ITEM
		I1	5 VOLT LAMP	12-09219-1	68
2	2		L WASHER #4	9006632	67
7	7		NUT KEPS #4-40	9006557	66
6	6		SCR PHL PAN HD #4-40 × 9/16 LG	9008033-1	65
1	1		HEAT SINK BRIDGE	1210907	64
A/R	A/R		COMPOUND THERMAL JOINT	9008888	63
1	1	R26	RESISTOR 1.8K 1/4W 5%	1300881	62
1	1	R19	RESISTOR 7.8K 1/4W 1%	1305322	61
1	1	R3	RESISTOR 12K 1/4W 5%	1300488	60
1	1	Q7	TRANSISTOR, UNIJUNCTION 2N6028	1810877	59
1	1		SCR, PHL PAN HD #6-32 × 1/4 LG	9006020-1	58
1	Ø		COVER	C-MD-53097600	57
1	1		SCR, PHL FLT HD #6-32 × 3/16 LG	9001420-2	56
1	1		WASHER, LOCK #6	9006633	55
1	Ø		~~SCR, PHL FLT HD #6-32 × 3/16 LG~~	~~9001420-2~~	~~54~~
1	1		CONTACT FEMALE	1209456	53
2	2		STRAP, CAPACITOR	C-MD-53097500	52
1	1		BRACKET, REGULATOR	D-IA-53097560-0	51
1	1		HOLDER, CAPACITOR 2.5	C-IA-12288-0	50
1	1		HEAT SINK REGULATOR	D-PS-1210737-0-0	49
1	1	C8, C12	CAP 56 PF	1000012	48
1	1	R24	RESISTOR 10 1W	1300171	47
1	1	L1	REACTOR 60 μHY MMC 43347	1610850	46
2	2		SCR, PHL PAN HD #4-40 1/4 LG	9008301-1	45
3	3		WASHER, INSULATOR	9006721	44
3	3		NUT, KEPS #6-32	9008185	43
4	4		SCR #10-32 × 3/4 SLOTTED PAN HD	9009659-01	42
1	1	F1	FUSE 15 AMP	1213237-01	41
2	2		FUSE CLIP	9007203	40
6	6		EYELET 66-4-8	9004000	39
1	1	J1	MATE-N-LOK CONN, 8 PIN	1209340	38
1	1	E1	INTEGRATED CIRCUIT DCC 1230	1910415	37
1	1	Q5	TRANSISTOR ACE	1510705	36
1	1	Q6	TRANSISTOR D45H8	1510708-1	35
3	3	Q1, Q3, Q4	TRANSISTOR MPSA45 MOT	1510706	34
1	1	Q2	TRANSISTOR 2N6302	1510196	33
Ø	1	R14	RES VARIABLE 200	1310852	32
1	1	R21	RES 5.1 1/4W 5%	1309422	31
1	1	R23	RES 100 1/4W 5%	1300229	30
1	1		SCR, HEX #4-40 × 1/8	9006011-1	29
1	1	R11	RES 27 1/4W 10%	1301420	28
Ø	1	R17	RES 750 1/8W, 1%	1302955	27
1	1	R9	RES 27 1/4W 5%	1301523	26
1	1	R7	RES 16.2K 1/8W, 1%	1309412	25
2	2	R8, R16	RES 1K 1/4W 5%	1300365	24
Ø	1	R18	RES 511 1/8W 1%	1302411	23
1	1	R25	RES 18K 1/4W 5%	1302465	22
2	2	R6, R15	RES 10K 1/4W 5%	1300479	21
Ø	1	R4	RES .02 5W 3%	1310876	20
1	1	R2	RES 820 1W 10%	1300538	19
1	1	R1	RES 3.9K 1W 10%	1302927	18
1	1	R5	RES 10 1/4W 5%	1301317	17
2	2	R13, R10	RES 150 1/4W 5%	1300250	16
Ø	1	D3	DIODE ZENER 1 MA. 5.1V	1110925	15
1	1	D7	SCR MCR 6499P-2	1109463	14
4	4		SCR, PFH #4 25/16 LG SELF TAP	9009314	13
1	1	D5	DIODE PWR NSR 8117	1110715	12
3	2	D4, D8 D9	DIODE PWR D664	1100114	11
1	1	D2	DIODE ZENER 1N4744	1105648	10
1	1	D1	DIODE BRIDGE	1110714	9
2	2	C6, C9	CAP 6K μf 10V	1010704	8
1	1	C1	CAP 31 K μf 50V	1010858	7
2	2	C4, C3	CAP .68 μf 25V	1001774	6
1	1	C2	CAP .033 μf 100V 10%	1000050	5
1	1	C11	CAP 2700PF 100V 5% DM	1001837	4
2	2	C10, C13	CAP .01 μf 100V 20% DISC	1001810	3
1	1	C5	CAP 2.2 μf, 20V, 10%	1002627	2
1	1		ETCHED CIRCUIT BOARD	5009129	1
			ASSY/DRILLING HOLE LAYOUT	D-AH-H744-0-5	
			X-Y COORDINATE HOLE LOCATION	ACC H744-0-9	REF
			MODULE ECO HISTORY	D-MH-H744-0-6	REF
			CIRCUIT SCHEMATIC	D-SE-H744-0-1	REF

NOTES CONT:

NOTE 8:
(1) 093 SCREW HEAD SHOULD BE ON TOP OF FLAT RECTANGULAR WASHER AS SHOWN. APPLY 6 INCH LBS. OF TORQUE WHEN SECURING Q3 TO CKT. BOARD BEFORE SOLDERING.

NOTE 9: TORQUE APPLICATION
(1) APPLY 12 INCH LBS. OF TORQUE TO THE SCREWHEAD OF #6 HARDWARE EXCEPT Q3.
(2) APPLY 12 INCH LBS. OF TORQUE TO #6 HARDWARE ON L1.
(3) APPLY 16 INCH LBS. OF TORQUE TO ALL #6 AND #10 HARDWARE EXCEPT ON L1.
(4) ALL HARDWARE TO BE TORQUED BEFORE SOLDERING.

NOTE 10:
INSERT C13 INTO ETCH PAD HOLES CONNECTED TO J1 TERMINALS, 2-3.

NOTE 11:
MIN TORQUE REQUIRED FOR QC INSPECTION:
8 INCH LBS. FOR #4 HARDWARE;
12 INCH LBS. FOR #6 AND #10 HARDWARE.
SEE NOTE 7

NOTES:
3. R14 - 200Ω VARIABLE IN THIS LOCATION DELETED ONLY FOR YA VARIATION.
4. ITEMS #79, 80, 81 ADDED ONLY FOR YA VARIATION,
5. ITEM #92 A ADDED ONLY FOR YA VARIATION.
6. RELOCATING D8 AND ADDITION OF D9 ONLY FOR YA VARIATION,
7. USE D9 IN YA VARIATION ONLY.

IC TYPE	GND	+5V
GND AND 5V ARE USUALLY PIN 7 AND 14 RESPECTFULLY EXCEPTIONS ARE STATED ABOVE		
IC PIN LOCATIONS		

ITEM NO	AWG	FROM PT	TO PT
JUMPER LIST			

DEC NO.	EIA NO.	DEC NO.	EIA NO.
D664	1N3606		
1N4744			

SEMICONDUCTOR CONVERSION CHART

FIRST USED ON OPT/MOD D-UA-H742A-0-0

ETCH BOARD REV H

PARTS LIST

EQUIPMENT CORPORATION
MAYNARD, MASSACHUSETTS

TITLE 5V REGULATOR

SCALE 2/1
SHEET 1 OF 1
SIZE E
CODE IDENT NO.
NUMBER UA H744-0-0
REV.
DIST.

digital EQUIPMENT CORPORATION MAYNARD MASSACHUSETTS

DRAWING DIRECTORY

CUSTOMER PRINT SET INDEX

THIS IS PRINT SET

SEQUENCE		SEQUENCE	
DRAWING DIRECTORY	B-DD-H745-Ø	MFG. SET	
CIRCUIT SCHEMATIC	D-CS-H745-Ø-1	TEST PROCEDURE	A-SP-11/45-TA-2
UNIT ASS'Y	E-UA-H745-Ø-Ø	MFG. SPEC.	A-SP-H745-Ø-8
		PACKAGING INSTRUCTION	A-PI-3700074-0-0

UNIT VARIATIONS

VAR	TITLE	PRINT SET H745-1
H745	-15V REGULATOR	X

REVISIONS		
DATE	CHG. NO.	REV
	H745-16	K
	H745-17	L
	H745-18	M
9-76	H745-19	N
10-76	H745-20	P
7-77	H745-22	R

USED ON OPTION/MODEL	
11/45	

SHEET 1 OF 2

DRN. D.FONTAINE	DATE 2-7-72	TITLE -15V REGULATOR
CHK'D. J GAUDETTE	DATE 2-17-72	
PROJ ENG. G.POTTER	DATE 2-25-72	
PROD. A.HUSCH	DATE 2-25-72	SIZE B / CODE DD / NUMBER H745-Ø / REV R
FIELD SERV. A. ZINS	DATE 2-25 72	DIST

DEC 16-12231-1062-1A-N972

DPB 106

FIND NO.	DRAWING NO.	DESCRIPTION	TYPE
1	E-UA-H745-Ø-Ø	UNIT ASSY	E/M
	D-CS-H745-Ø-1	CIRCUIT SCHEMATIC	E
	D-AH-H745-Ø-5	ASSY/DRILLING HOLE LAYOUT	E
	B-MH-H745-Ø-6	MODULE ECO HISTORY	E
	A-SP-H745-Ø-8	MFG SPEC	E
	A-SP-11/45-TA-2	TEST PROCEDURE	E
	D-PS-1210737-0-0	HEAT SINK	M
	D-IA-5309756-0-0	REGULATOR BRACKET	M
	C-IA-5309761-0-0	2-5 CAP BRACKET	M
	C-MD-5309759-0-0	CAPACITOR STRAP	M
2	A-PI-3700074-0-0	PACKAGING INSTRUCTIONS	M
	A-PS-9905211-0-0	OUTER CARTON	M
	A-PS-9905212-0-0	INNER PACKAGE	M

FIND NO.	DRAWING NO.	DESCRIPTION	TYPE

TYPE: E ELECTRICAL
M MECHANICAL
E/M ELECTRO/MECHANICAL

digital

TITLE	SHEET	SIZE	CODE	NUMBER	REV
-15V REGULATOR	2 OF 2	B	DD	H745-Ø	R

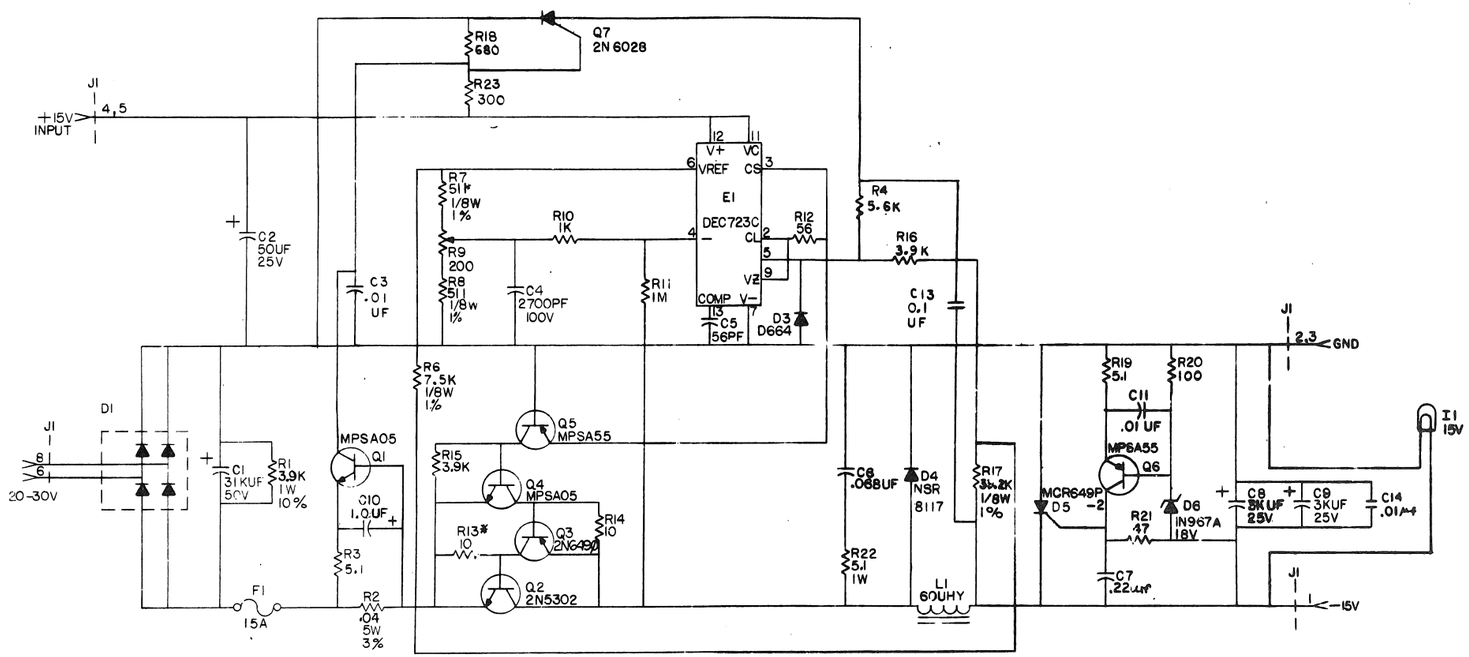

* FUSIBLE
UNLESS OTHERWISE INDICATED:
RESISTORS = 1/4W, 5%

QTY	REF DESIGNATION	DESCRIPTION	PART NO.	ITEM NO.

PARTS LIST

ETCH BOARD REV E

DEC NO.	EIA NO.	DEC NO.	EIA NO.
D664	IN 3606	D45H8	
NSR 8117		2N 6028	
MCR 649P − 2			
IN 967A	SAME		
2N 5302			
MPS A05			
MPS A55			

SEMICONDUCTOR CONVERSION CHART

REV	CHANGE NO.	REVISIONS	CHK
E	H745 − 0002	A. BARON 10-26-71	

DRN. Roger J Doucette DATE 11-4-71
CHK'D. Nancy Moore DATE 11-4-71
ENG. DATE 1/11/72
PROJ. DATE 1/11/72
PROG. DATE 1/13/72
NEXT HIGHER ASSY
SCALE
SHEET 1 OF 1

digital EQUIPMENT CORPORATION MAYNARD, MASSACHUSETTS

TITLE −15V REG.

SIZE D CODE CS NUMBER H745 −Ø−1 REV. E

DIST.

DEC FORM NO 1RD-135

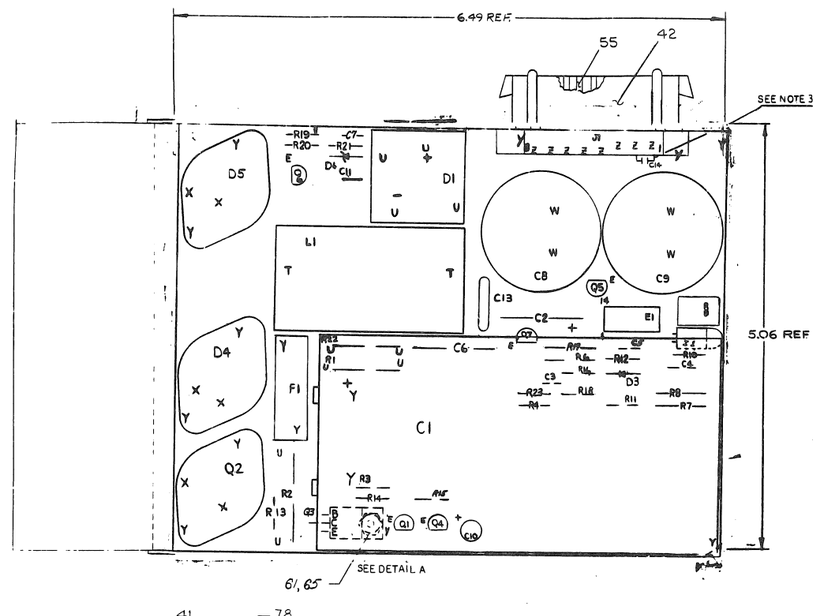

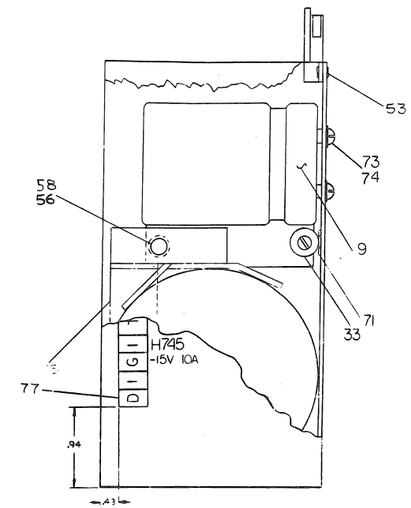

NOTE:
3. INSERT C14 INTO ETCH PAD HOLES CONNECTED TO J1 TERMINALS 1-2.

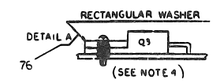

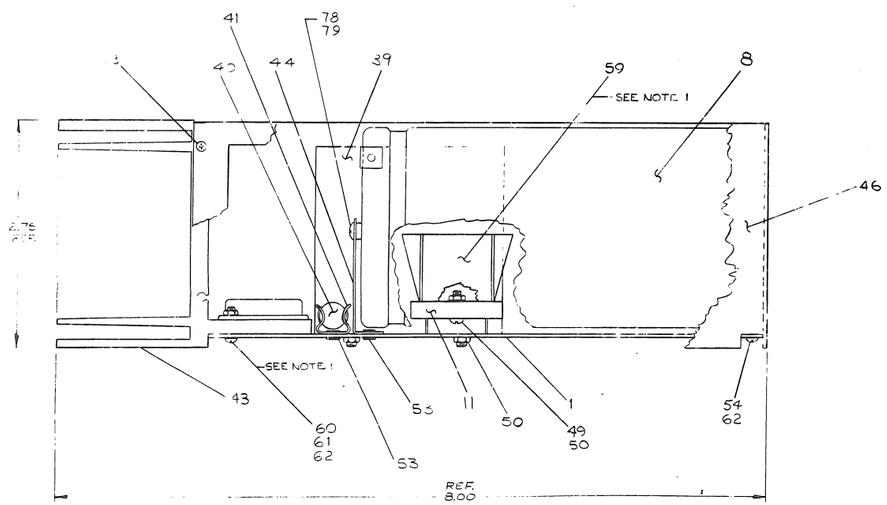

NOTE 4:
Q3 SCREW HEAD SHOULD BE ON TOP OF FLAT RECTANGULAR WASHER AS SHOWN, APPLY 6 INCH LBS. OF TORQUE WHEN SECURING Q3 TO CKT. BOARD BEFORE SOLDERING.

NOTE 5: TORQUE APPLICATION
(1) APPLY 12 INCH LBS. OF TORQUE TO ALL #4 HARDWARE EXCEPT Q3.
(2) APPLY 16 INCH LBS. OF TORQUE TO ALL #6 AND #10 HARDWARE.
(3) ALL HARDWARE TO BE TORQUED BEFORE SOLDERING.

NOTE:
1. APPLY ITEM #51 (THERMAL COMPOUND) BETWEEN TRANSISTOR AND INSULATOR, WASHER (ITEM #52) ALSO BETWEEN WASHER & HEAT SINK FOR Q2, Q4 & Q5 ALSO APPLY ITEM #51 (COMPOUND) BETWEEN ITEM #11 (DIODE BRIDGE AND ITEM #59 (HEAT SINK).
2. 1010621 MAY BE SUBSTITUTED FOR C13 (1000039).

		ASSY/DRILLING HOLE LAYOUT	D-AM-H745-0-5	70
1		PACKING INSTRUCTIONS	API-3700074-0-0	69
1	R18	RES. 680 1/4W 5%	1301424	68
1	R23	RES. 300 1/4W 5%	1301425	67
1	C13 (SEE NOTE 2)	CAP. 0.1 UF 100V 20%	1000010	66
1		SCR PH 8-32 X 5/16 LG	9000010-1	65
1	I1	LAMP 15V	1214356	64
4		SCR, PPH #4 X 5/16 LG, SELF TAPPING	9009142	63
8		L. WASHER #4	9006632	62
7		NUT K-PS #6-40	9009551	61
8		SCR PAL PAN HD #4-40 X 1/4 LG	9006033-1	60
1		HEAT SINK BRIDGE RECT	1210907	59
1		SCR PAL PAN HD #8-32 X 1/4 LG	9006020-1	58
1		SCR PAL FLT HD #8-32 X 1/4 LG	9006020-02	57
1		WASHER LOCK #8	9006633	56
8		CONTACT FEMALE	1201455	55
2		SCR PAL PAN HD #4-40 X 1/4 LG	9006031-1	54
8		EYELET GB-4-5	9009000	53
3		INSULATOR WASHER	9008721	52
A/R		THERMAL COMPOUND	9009288	51
3		NUT REPS 8-32	9009185	50
1		SCREW PAL PAN HD 8-32 X 5/8 LG	9006025-01	49
4		~~SCREW PAL FLT HD 8-32 X 1/4 LG~~	~~9006020-03~~	~~48~~
1		~~CONTRACTOR~~	~~C-MD-6309758-0-0~~	~~47~~
1		FUSEHOLDER BRKT	D-IA-6309758-0-	46
1		2.5 HOLDER CAPACITOR	C-IA-74-2 [illegible]	45
2		STRAP CAPACITOR	C-MD-6309758-0-0	44
1		HEAT SINK	D-PS-1210737-0-0	43
1	J1	CTRL UNIT-MALLOCK 6 PIN	1208841	42
2		FUZE CLIP	9007251	41
1	F1	FUSE	1213237-01	40
1	L1	REACTOR 60 UHY	1810090	39
1	E1	INTERGRATED CIRCUIT LM723C	1810415	38
1	Q3	TRANSISTOR 2N6498	1512652-01	37
2	Q5, Q6	TRANSISTOR A05	1510708	36
2	Q1, Q4	TRANSISTOR A03	1510706	35
1	Q2	TRANSISTOR 2N3302	1510701	34
1	R9	RES VARIABLE 250 Ω, 20%	1310052	33
1	R20	RES 100Ω 5%	1300223	32
1	R21	RES 1 W 5%	1300[illegible]05	31
1	R4	RES. 5.6K 1/8 W 5%	1300274	30
2	R15, R16	RES 3 EA 1/8 5%	1300444	29
2	R13, R3	RES 5 1 1/8 5%	1300422	28
1	R12	RES 33 1/8 5%	1300502	27
1	R21	RES 47 1/8 5%	1300202	26
1	R17	RES 38.3K 1/8W 1%	1306263	25
1	R10	RES 18 1/8 5%	1300388	24
1	R14	RES 10 1/8 5%	1301317	23
1	R6	RES 7.5K 1 1/8 1%	1303322	22
2	R7, R8	RES 511 1/8 1%	1300411	21
1	R22	RES 5.1 1W 5%	1302138	20
1	R5	RES 10K 1/8 5%	1300276	19
1	R2	RES .04Ω 1W 3%	1311302-00	18
1	R1	RES 3.9K 1W 10%	1302921	17
1	D6	DIODE 1N5817	1110098	16
1	D5	SCR MCR8A05-2	1108405	15
1	D4	DIODE MPD5117	1110113	14
1	D3	DIODE D264	1108114	13
1	Q7	TRANSISTOR UNI JUNCTION 2N2646	1810077	12
1	D1	DIODE BRIDGE	1110714	11
1	D2	~~DIODE 1N4148 JOHNSON~~	~~1000012~~	~~10~~
2	C9, C8	CAP 3.0K UF 25V	1010703	9
1	C1	CAP 39K UF 50V	1010858	8
1	C10	CAP 1.0 UF 25V	1010866-01	7
1	C2	CAP 50 UF 25V -10+75%	1001786	6
1	C6	CAP 000 UF 100V 10%	1000052	5
1	C4	CAP 2700PF 100V 5%	1001837	4
3	C11, C3, C13	CAP .01UF 100V 20%	1001810	3
1	C14	CAP 10UF 100V 5%	1001812	2
		ETCHED CIRCUIT BOARD	9001725	1
		DOUBLE PAD STATION	D-AM-H745-0-3	REF
		CIRCUIT SCHEMATIC	D-AM-H745-0-1	REF
		CIT COORDINATE ROUTE LOCATION	D-AM-H745-0-2	REF
QTY.	REF DESIGNATION	DESCRIPTION	PART NO.	ITEM NO.

PARTS LIST

1		DECAL (H745)	7416945-02	80
2		WASHER INT. TOOTH #10	9006635	79
2		SCREW PAN 10-32 X 5/16 LG	9009669-01	78
1	C7	CAP .22 UF 50V	1010274	77
1		WASHER, RECTANGULAR	9009769	76
1	R13	RES 10Ω/1W, FUSIBLE	1312496-00	75
4		LOCKWASHER #10 INT	9006635	74
4		SCR #10-32 X 3/4 SLOTTED FIN HD.	9009669-01	73
				72
1		TRANSIPAD	9008206	71

ETCH BOARD REV E

IC TYPE	GND	+15V
GND AND 5V ARE USUALLY PIN 7 AND 14 RESPECTFULLY EXCEPTIONS ARE STATED ABOVE		

IC PIN LOCATIONS

ITEM NO	AWG	FROM PT	TO PT

JUMPER LIST

DEC NO.	EIA NO.	DEC NO.	EIA NO.
D669	1N3606		

SEMICONDUCTOR CONVERSION CHART

DRAWN	A. BARON	11/17/72
TRACED		
CHECKED		
ENGR		
MFG		
QA		
ENGR MGR		
MFG MGR		
QA MGR		

DIGITAL EQUIPMENT CORPORATION. MAYNARD, MASSACHUSETTS

TITLE -15 REGULATOR

SIZE E | CODE UA | NUMBER H745-0-0 | REV.

SHEET 1 OF 1

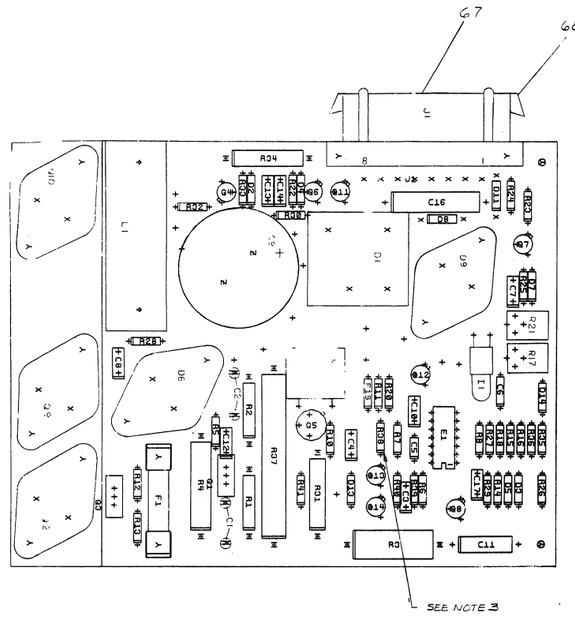

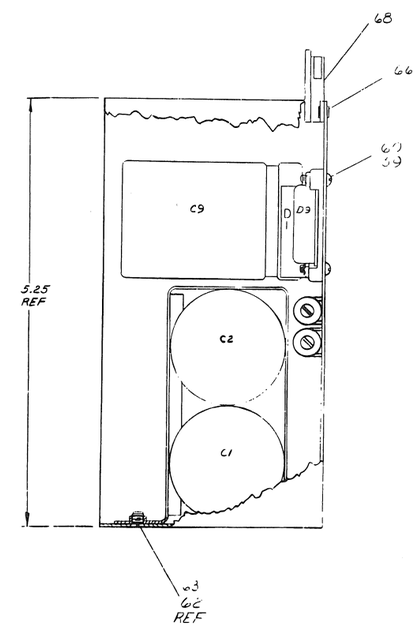

NOTES:

1. APPLY ITEM # 71 (COMPOUND) ON BOTH SIDES OF ITEM #72 (INSULATOR WASHER) FOR Q2, Q9, Q10. ALSO APPLY BETWEEN ITEM # 11 (DIODE BRIDGE D1). AND ITEM # 65 (HEAT SINK, BRIDGE RECT.)
2. UNLESS OTHERWISE INDICATED: RESISTORS ARE 1/4 W ±5%. CAPACITORS ARE 100V, ±5%.
3. ADD INSULATION (9107256-11) TO BOTH LEADS OF R38 TO AVOID SHORT TO ETCH.
4. APPLY ITEM #71 (COMPOUND) ON BOTH SIDES OF ITEM #94 (MICA WASHER) FOR Q6.

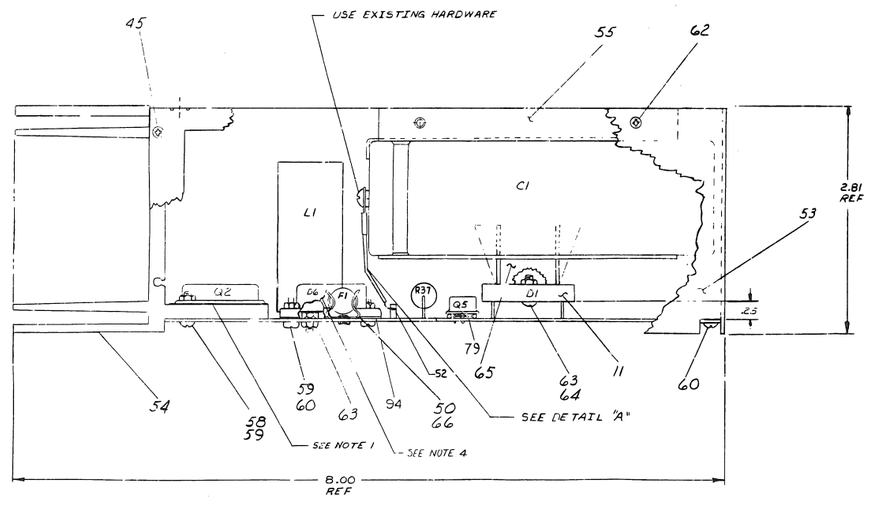

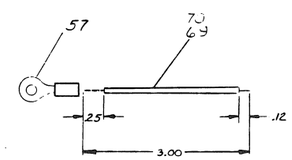

DETAIL "A"
SCALE : NONE
RED WIRE GOES TO POSITIVE TERMINAL
BLK WIRE GOES TO NEGATIVE TERMINAL

DELETED COMPONENTS	
RESISTORS	R9
DIODES	D10, D12

QTY	REF DESIGNATION	DESCRIPTION	PART NO.	ITEM NO.
1		WASHER, MICA	9009623	97
1	C7	CAP .22 uF 50V	1010274	93
1	Q1	TRANSISTOR 2N4920-1	1509605-1	92
1	R13	RES:27Ω 1/4W 5% FUSIBLE	1312496-01	91
AR		INSULATION	9107256-11	90
1	R39	RES 220 1/4W 5%	1300271	89
1	R37	RES .1 10W 1%	1309108	88
1	R38	RES.1K 15 THERMISTOR	1310071	87
1	C16	CAP 1000uF 25V	1002781	86
1	Q10	TRANSISTOR MJ481	1518712	85
1	Q9	TRANSISTOR MJ481	1511349	84
1	C13	CAP, 100 PF 100V ±5% UN	1023016	83
				82
2	Q4, Q14	TRANSISTOR MPS A42	1516123	81
1	D2	DIODE 0243	1150120	80
2	(UNDER Q5 & R6)	TRANSIPAD	9011233	79
1	R31	RES 1.5Ω 2W 10%	1313227	78
2	C16, C17	CAP, 1000 uF, 100V, 22% UN	1000842	77
1	R22	RES 383Ω 1/8W 1%	1300123	76
2	R33, R8	RES 1.78K 1/8W ±1%	1302612	75
1	R11	RES 15K 1/8W 1%	1303496	74
1	R20	RES 470Ω 1/8W ±1%	1300618	73
				72
3		WASHER INSULATOR	9006721	71
AR		COMPOUND THERMAL	9008268	70
AR		WIRE "A" (BARE STRD.) PVC INS (BLK)	9107380-10	70
AR		WIRE "A" (BARE STRD.) PVC INS (RED)	9107380-22	69
1	J1	MATE-N-LOCK 100W 8 PIN	1209340	68
8		PIN, SOCKET, MATE-N-LOCK	1209408	67
4		EYELET #6-4.7	9000132	66
1		HEAT SINK BRIDGE RECTIFIER	1210007	65
1		SCR PKG PRN HD 6-32 F.L.	9000024	64
5		NUTS NUT 6-32 SS	9009169	63
2		SCR PKG FLAT HD, 6-32 X 5/16	2000021-2	62
10		[illegible]	[illegible]	61
10		SCR PKG PRN HD. 4-40 X 3/8	1000911-1	60
8		NUTS NUT 4-40	2000057	59
4		SCR PKG PRN HD 4-40 X 1/4	2000013-1	58
4		TERMINAL SOLDERLESS #10	9007230	57
1		[illegible]	[illegible]	56
1		1/2 CAP BRKT	0-14-5300156-0-0	55
1		HEAT SINK REGULATOR	0-PS-1210121-0-0	54
1		BRACKET REG	0-14-5300158-4-0	53
4		SPLIT LUG	2000120	52
1	Q8	TRANSISTOR 2N6078	15-10077	51
2		FUSE CLIP	9007203	50
1	F1	FUSE 10 AMP	1213237-00	49
1	L1	REACTOR 170 UHY	15-10140	48
1	E1	INTEGRATED CIRCUIT 723	15-10415	47
6	Q7, Q6, Q11, Q12, Q13	TRANSISTOR MPS A55	15-10708	46
4		SCR PKG FLAT HD 4-40 SELF TAPPING	2000142-112	45
1	Q5	TRANSISTOR 2N3055	15-03209	44
1	Q2	TRANSISTOR 2N6038	15-10089	43
1	Q3	TRANSISTOR 2N6491	15-13704	42
2	R17, R21	RES VARIABLE 200Ω ±20%	13-10052	41
2	R23, R36	RES 5.1 1/2 5%	13-00422	40
1	R18	RES 237 1/4W 1%	1306867	39
				38
2	R14, R15	RES 10Ω 5% 2W	13-01327	37
1	R10	RES 150 1/2 5%	13-00280	36
REF		ASSY/DRILLING HOLE LAYOUT	D-AM-H754-0-0	35
2	R1, R40	RES. 2K 1/4W 5%	1302398	34
2	R6, R16	RES 12K 1/2 5%	13-00488	33
6	R15 R25 R30, R24, R35, R41	RES 100 1/2 5%	13-00229	32
1	R12	RES 68Ω 1/4W ±5% FUSIBLE	1312496-02	31
				30
1	R27	RES 10K 1/2W 1%	1303312	29
1	R32	RES 511Ω 1%	13-00444	28
1	R19	RES 287Ω 1/2W 1%	13-01124	27
1	R29	RES 18Ω 1/2 5%	13-00483	26
1	C11	CAP 2.2 uF 35V 10% TANT	10-02431	25
1	R4	RES 5W 7 .03 Ω	1310876-1	24
1	R3	RES 1.5Ω 5W ±5%	13-01897	23
1	R34	RES 47 2W 5%	13-03258	22
1	R28	RES 1 5W 1/2 5%	13-00301	21
2	R1, R2	RES 3 5W 10 10%	13-00221	20
1	R26	RES 10Ω 1/4W, 5%	1301317	19
2	D11, D8	DIODE 1N3624	1110420	18
				17
1	D16	DIODE 1N823A ZENER	1108808	16
1	D5	DIODE HER 608 P-2	11-09865	15
1	D7	DIODE 1N3788 24V	11-12056	14
1	D6	DIODE, 20 AMP FAST REC	11-10715	13
1	D3	DIODE 1N4744 ZENER, 15V	11-00648	12
1	D1	DIODE MDS 3944	11-10114	11
3	D6, D13, D4	DIODE 0304	11-00114	10
1	C15	CAP .1UF 100V 20% DISC	1000030	9
1	C9	CAP 2.2K UF 35V 20% AL. EL.	10-10459	8
4	C3, 18, C4, C15	CAP .01UF 50V 20% DISC.	10-01810-01	7
1	C6	CAP 270PF 100V 5% DM	10-01871	6
1	C5	CAP 68PF 100V 5% DM	10-00012	5
1	I1	LAMP 28V, 40 MA	12-11239	4
1	C12	CAP .01UF 25V DISC	10-01174	3
2	C1, C2	CAP 5,600UF 50V 20% AL. EL.	10-01867	2
1		ETCHED CIRCUIT BOARD	5010531	1
		MODULE ECO HISTORY	B-MM-H754-0-0	REF
		X-Y COORDINATE HOLE LOCATION	D-CU-H754-0-0	REF

PARTS LIST

ETCH BOARD REV	J		
D664	1N3606		

IC TYPE	GND	+5V
GND AND 5V ARE USUALLY PIN 7 AND 14 RESPECTIVELY EXCEPTIONS ARE STATED ABOVE		

IC PIN LOCATIONS

ITEM NO.	AWG	FROM PT	TO PT

JUMPER LIST

DEC NO.	ECA NO.	DEC NO.	ECA NO.

SEMICONDUCTOR CONVERSION CHART

REV	CHANGE NO.	DATE	BY
J	H754-00004	4-20-77	[illegible]
H	H754-00003	3-30-77	[illegible]
G	H754-00002	2-8-77	[illegible]
F	H754-00001	1-13-77	[illegible]
E	H754-00000	12-23-76	[illegible]
D	H754-00009	11-18-76	[illegible]
C	H754-00008	10-19-76	[illegible]
B	H754-00007	10-12-76	[illegible]
A	H754-00006	9-23-76	[illegible]

REVISIONS

NEXT HIGHER ASSY

SCALE 1 — SHEET 1 OF 2

DIGITAL EQUIPMENT CORPORATION
MAYNARD, MASSACHUSETTS

TITLE
+20 VOLT REGULATOR

SIZE/CODE B CS | NUMBER H754-0-1 | REV.

SHT. 1 2

H754-0-1

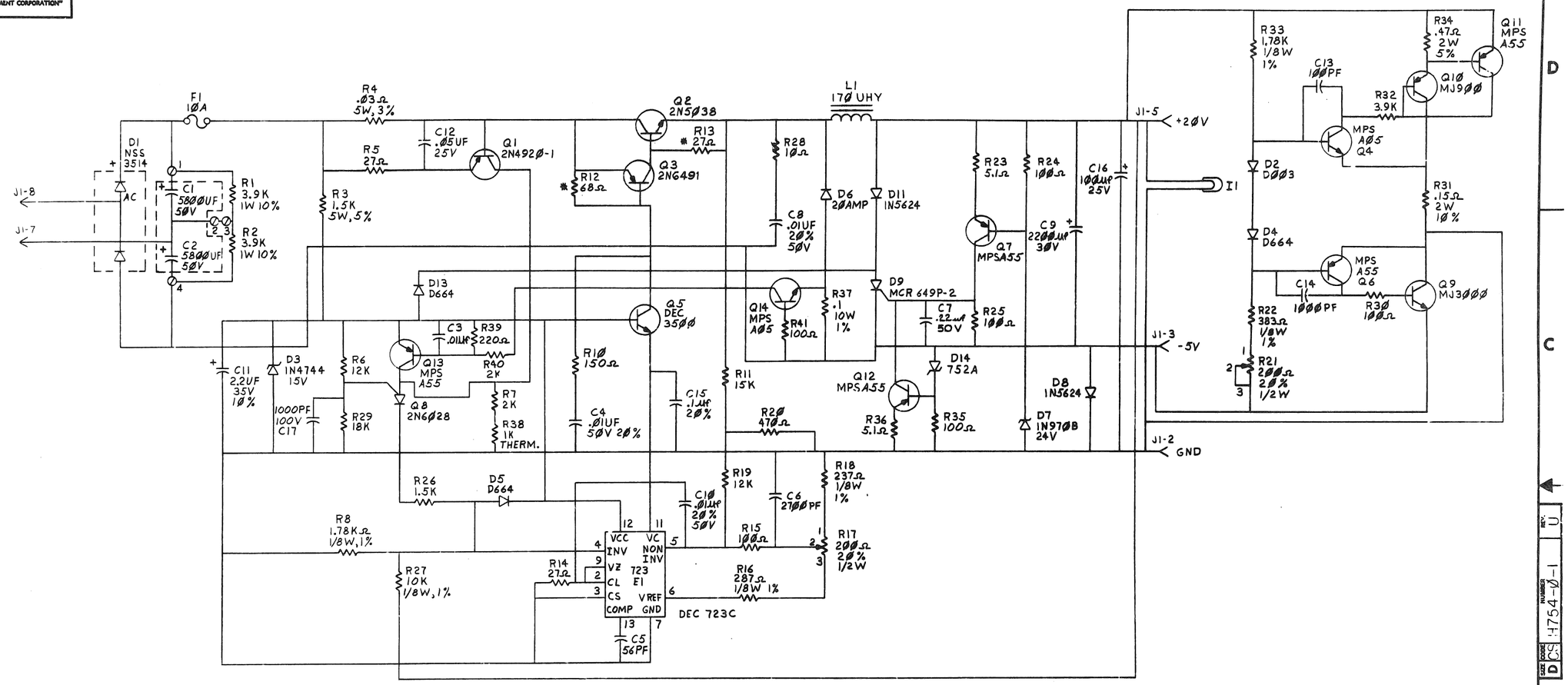

* FUSIBLE RESISTOR

DRN V. BISSONNETTE	8-29-72	FIRST USED ON H754	digital
CHK'D R. VOWLES	12-17-72	TITLE	
ENG. R. BURTON	5-7-73	+20 VOLT REGULATOR	
PROJ. ENG. R. BURTON	5-7-73		
PROD. L. BAPTISTE	5-9-73		
NEXT HIGHER ASSY.			
SCALE		SIZE D CODE CS NUMBER H754-0-1 REV. U	
SHEET 2 OF 2		DIST.	

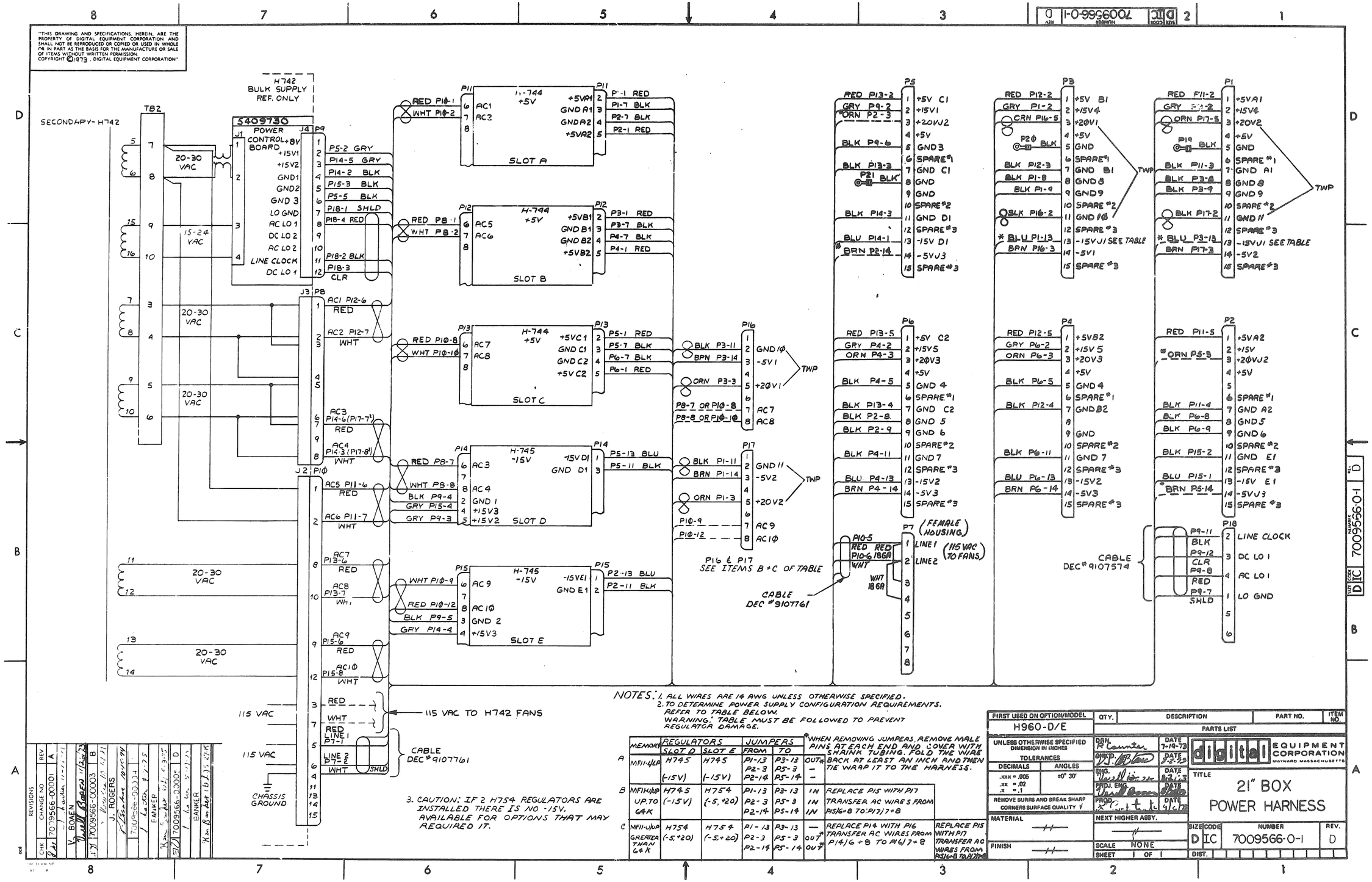

NOTES:
1. ALL WIRES ARE 14 AWG UNLESS OTHERWISE SPECIFIED.
2. TO DETERMINE POWER SUPPLY CONFIGURATION REQUIREMENTS. REFER TO TABLE BELOW. WARNING: TABLE MUST BE FOLLOWED TO PREVENT REGULATOR DAMAGE.

	MEMORY	REGULATORS SLOT D	REGULATORS SLOT E	JUMPERS FROM	JUMPERS TO		
A	MF11-UP	H745 (-15V)	H745 (-15V)	P1-13 P2-3 P2-14	P3-13 P5-3 P5-14	OUT* — —	
B	MF11-UP UP TO 64K	H745 (-15V)	H754 (-5, +20)	P1-13 P2-3 P2-14	P3-13 P5-3 P5-14	IN IN IN	REPLACE P15 WITH P17 TRANSFER AC WIRES FROM P15/6+8 TO P17/7+8
C	MF11-U UP GREATER THAN 64K	H754 (-5, +20)	H754 (-5, +20)	P1-13 P2-3 P2-14	P3-13 P5-3 P5-14	— OUT* OUT*	REPLACE P14 WITH P16 TRANSFER AC WIRES FROM P14/6+8 TO P16/7+8

REPLACE P15 WITH P17 TRANSFER AC WIRES FROM P15/6+8 TO P17/7+8

*WHEN REMOVING JUMPERS, REMOVE MALE PINS AT EACH END AND COVER WITH SHRINK TUBING. FOLD THE WIRE BACK AT LEAST AN INCH AND THEN TIE WRAP IT TO THE HARNESS.

3. CAUTION: IF 2 H754 REGULATORS ARE INSTALLED THERE IS NO -15V. AVAILABLE FOR OPTIONS THAT MAY REQUIRE IT.

REVISIONS				
CHK	CHANGE NO	REV		
	7009566-00001	A	V. BOAEN	
	7009566-00003	B	J. ROGERS	
	7009566-00004	C	FANKER	
	7009566-00005	D	FANKER	

FIRST USED ON OPTION/MODEL	QTY.	DESCRIPTION	PART NO.	ITEM NO.
H960-D/E		PARTS LIST		

UNLESS OTHERWISE SPECIFIED DIMENSION IN INCHES
TOLERANCES: DECIMALS .XXX = .005, .XX = .02, .X = .1; ANGLES ±0° 30'
REMOVE BURRS AND BREAK SHARP CORNERS SURFACE QUALITY √
MATERIAL —//—
FINISH —//—

DRN. R. Counter DATE 7-19-73
CHK'D. DATE 8-2-73
ENG. DATE
PROJ. ENG. DATE
PROD. DATE 9/6/73
NEXT HIGHER ASSY. —//—
SCALE NONE
SHEET 1 OF 1

digital EQUIPMENT CORPORATION MAYNARD MASSACHUSETTS

TITLE 21" BOX POWER HARNESS

SIZE	CODE	NUMBER	REV.
D	IC	7009566-0-1	D

DIST.

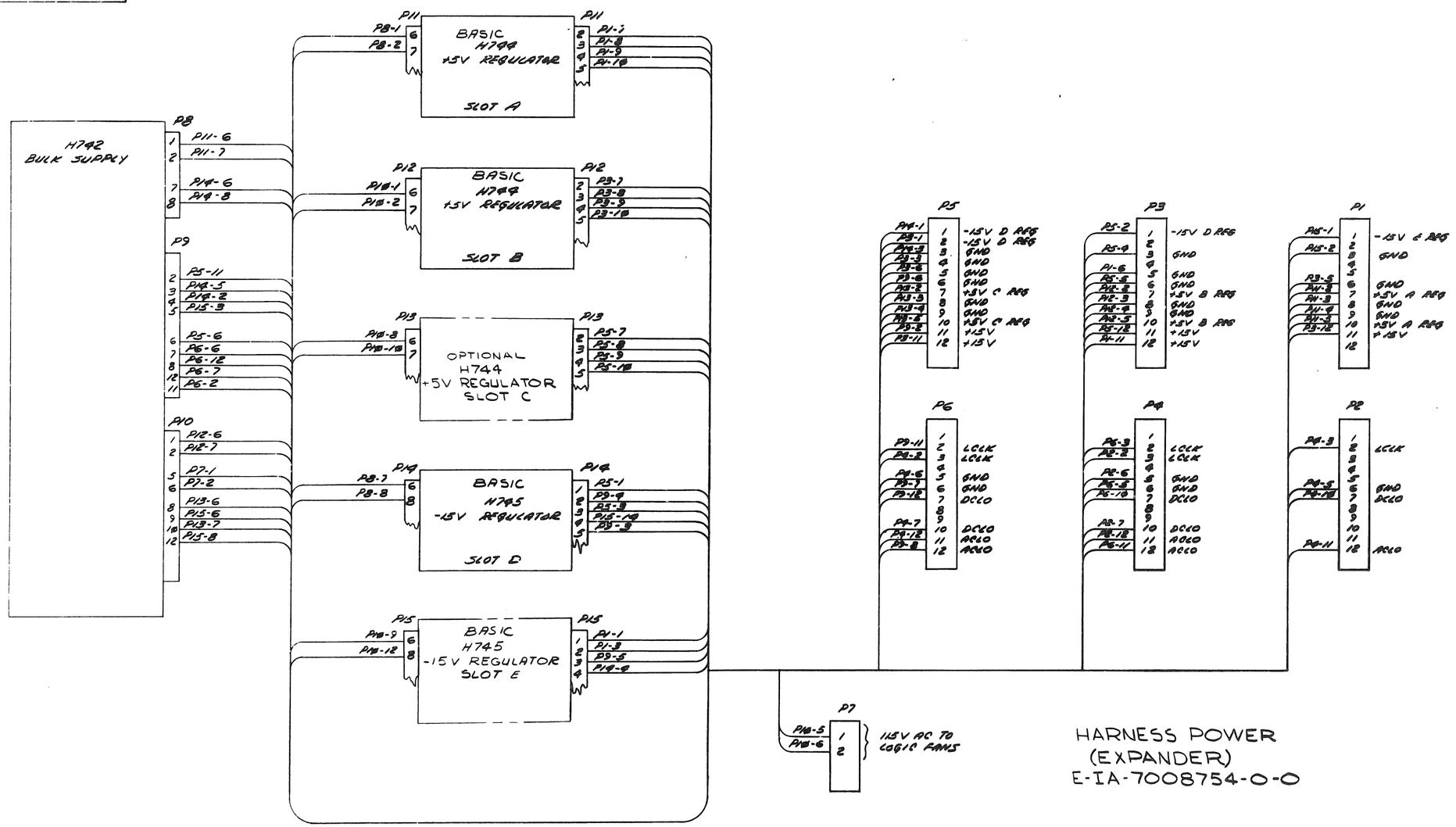

HARNESS POWER
(EXPANDER)
E-IA-7008754-0-0

OLD STYLE HARNESS FOR SYSTEMS
WITH SERIAL NUMBERS 5999 AND LOWER

FIRST USED ON OPTION/MODEL	QTY.	DESCRIPTION	PART NO.	ITEM NO.
11/40		PARTS LIST		

UNLESS OTHERWISE SPECIFIED DIMENSION IN INCHES. TOLERANCES

DECIMALS	ANGLES
.XXX = .005 .XX = .02 .X = .1	±0° 30'

REMOVE BURRS AND BREAK SHARP CORNERS SURFACE QUALITY ✓

MATERIAL —//—

FINISH —//—

DRN.	DATE	8/1/72
CHK'D.	DATE	7/21/72
ENG.	DATE	9/1/72
MGR. ENG.	DATE	9/22/72
PROD.	DATE	9/26/72

NEXT HIGHER ASSY. B-DD-11/40-0

SCALE —//—

SHEET 1 OF 1

digital EQUIPMENT CORPORATION MAYNARD, MASSACHUSETTS

TITLE POWER HARNESS

SIZE	CODE	NUMBER	REV.
D	IC	7008754-0-3	

DIST.

WIRE TABLE

ITEM NO.	DESCRIPTION AWG	COLOR	FROM POINT	CONNECTION	TERM	TO POINT	CONNECTION	TERM	SIGNAL	LENGTH
1	18	WHT	1	P1-6	7	7	P2-6	7	SPARE-2	12 IN
1	↑	WHT	2	P1-5	↑	8	P2-5	↑	SPARE-1	↑
3	↓	YEL	3	P1-4	↓	9	P2-4	↓	AC LO	↓
2	↓	VIO	4	P1-3	↓	10	P2-3	↓	DC LO	↓
4	↓	BRN	5	P1-2	↓	11	P2-2	↓	LINE CLOCK	↓
5	18	BLK	6	P1-1	7	12	P2-1	7	LO GND	12 IN

NOTES:

1. USE TIE WRAPS ITEM 8 APPROXIMATELY EVERY THREE (3) INCHES WHEN NECESSARY AND AT EVERY BREAKOUT POINT.
2. USE CONN. BRKT. C-MD-9905761-H6-0. MOUNT WITH WOOD SCREWS. USE MATING CONN. 1209350-06.

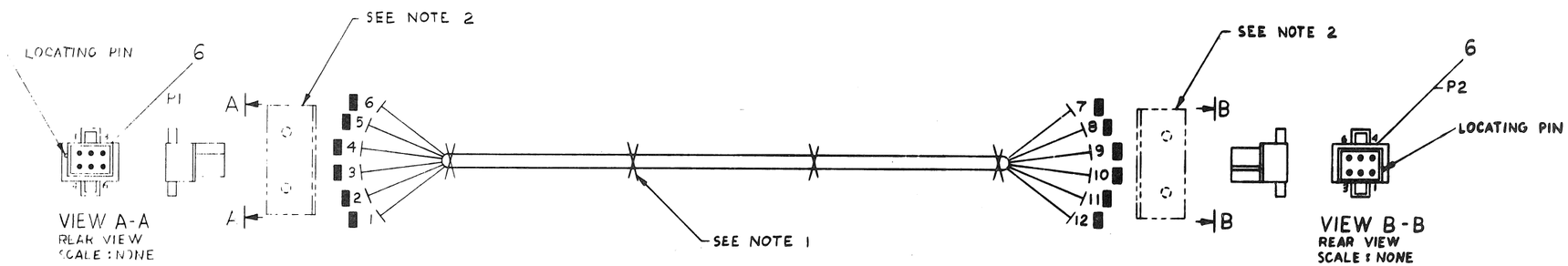

SCALE

0 IN — 6 IN — 12 IN

DO NOT REDUCE
DO NOT BUILD FROM REDUCED PRINT

FIRST USED ON OPT/MOD	SYM	QTY.	DESCRIPTION	PART NO.	ITEM NO.
		4	WRAP, TIE	9007031	8
		12	PIN, MALE	1209378-00	7
		2	HOUSING, CONN. 6 PIN	1209351-06	6
		12 IN	WIRE #18 AWG BLK	9107360-00	5
		12 IN	WIRE #18 AWG BRN	9107360-11	4
		12 IN	WIRE #18 AWG YEL	9107360-44	3
		12 IN	WIRE #18 AWG VIO	9107360-77	2
		24 IN	WIRE #18 AWG WHT	9107360-99	1

PARTS LIST

UNLESS OTHERWISE SPECIFIED DIMENSION IN INCHES
TOLERANCES
DECIMALS: .xxx = .005, .xx = .02, .x = .1
ANGLES: ±0° 30'
REMOVE BURRS AND BREAK SHARP CORNERS SURFACE QUALITY √

MATERIAL: SEE PARTS LIST
FINISH: —/—

DRN. B. Blodgett DATE 10-15-73
CHK'D. DATE 10/17/73
ENG. Donald Bacon DATE 10/18/73
PROJ. ENG. DATE 10/18/73
PROD. DATE 10/18/73
NEXT HIGHER ASSY.
SCALE 1/1
SHEET 1 OF 1

digital EQUIPMENT CORPORATION MAYNARD, MASSACHUSETTS

TITLE: 6 PIN JUMPER HARNESS

SIZE D | CODE IA | NUMBER 1009573-0-0 | REV.
DIST.

D IA 1009573-0-01

CAUTION—DRAWING SIZE AND SCALE REDUCED FOR MICROFILM NOT TO BE USED FOR PRODUCTION

WIRE TABLE

ITEM NO.	DESCRIPTION AWG	COLOR	FROM POINT	FROM CONNECTION	FROM TERM	TO POINT	TO CONNECTION	TO TERM	SIGNAL
5	14 TWP	RED	3	P3-10	SOLD	15	P1-1	3	+5V
		BLK	4	P3-8	SOLD	14	P1-7	3	GND
9	14	GRY	5	P3-4	SOLD	16	P1-2	3	+15V
6	14 TWP	BLK	1	P3-12	SOLD	13	P1-9	3	GND
		BLU	2	P3-11	SOLD	12	P1-13	3	-15V
8	18	BRN	8	P3-1	SOLD	11	P2-2	3	LTG
7	18 TWP	VIO	6	P3-3	SOLD	9	P2-3	3	DCLO
		YEL	7	P3-2	SOLD	10	P2-4	3	ACLO
11	22	–	–	P3-13	SOLD	–	P3-14	SOLD	DCLO
11	22	–	–	P3-15	SOLD	–	P3-16	SOLD	ACLO

NOTES:

1. USE TIE WRAPS (X) ITEM #4 APPROXIMATELY EVERY THREE (3) INCHES WHEN NECESSARY AND AT EVERY BREAKOUT POINT.
2. DOT (⊗) INDICATES NAIL LOCATIONS FOR ASSEMBLY USE ONLY, COVER NAILS WITH SHRINK TUBING TO PREVENT CUTTING HARNESS.
3. USE CONN BRKT C-MD-9305761-H15-0 MOUNT WITH WOOD SCREWS USE MATING CONN 1209350-15.
4. USE CONN BRKT C-MD-9305761-H6-0 MOUNT WITH WOOD SCREWS. USE MATING CONN 1209350-06
5. USE CONN. HOLD DOWN B-MD-9305767-0-0 WITH PLATE B-MD-9305767-0-1, USE TAPE DEC #9008734 & CONN HB07 DEC #(1209123) REMOVE PINS & FLANGES AS SHOWN IN DETAIL "A". MOUNT WITH WOOD SCREWS.

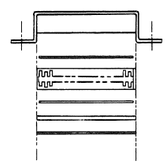

DETAIL "A"

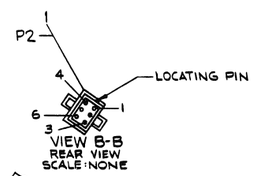

VIEW B-B
REAR VIEW
SCALE: NONE

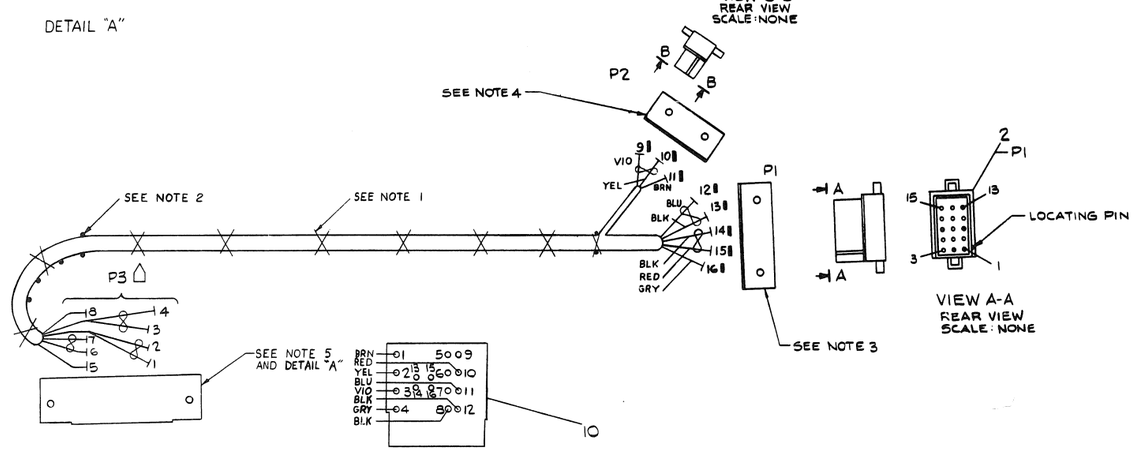

P3

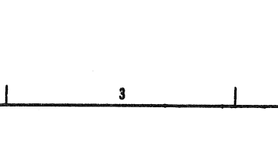

VIEW A-A
REAR VIEW
SCALE: NONE

SCALE
0 IN. 6 IN. 12 IN.

DO NOT REDUCE
DO NOT BUILD FROM REDUCED PRINT

SYM	QTY.	DESCRIPTION	PART NO.	ITEM NO.
	A/R	BUSS WIRE #22 AWG	9107560-01	11
	1	POWER CONN	G772	10
	A/R	WIRE #14 AWG GRY	9107310-88	9
	A/R	WIRE #18 AWG BRN	9107360-11	8
	A/R	WIRE #18 TWP YEL/VIO	9107430-47	7
	A/R	WIRE #14 TWP BLK/BLU	9107440-06	6
	A/R	WIRE #14 TWP BLK/RED	9107440-02	5
X	A/R	WRAP, TIE	9007031	4
⊗	8	PIN, MALE	1209378-00	3
	1	HOUSING, CONN. 15 PIN	1209351-15	2
	1	HOUSING, CONN. 6 PIN	1209351-06	1

PARTS LIST

FIRST USED ON OPTION/MODEL

UNLESS OTHERWISE SPECIFIED DIMENSION IN INCHES. TOLERANCES
DECIMALS .XXX ± .005 .XX ± .02 .X ± .1
ANGLES ±0° 30'

REMOVE BURRS AND BREAK SHARP CORNERS. SURFACE QUALITY ✓

MATERIAL: SEE PARTS LIST

FINISH: —

DRN. DATE
DSGN. DATE
QA DATE
PROJ. DATE 10/26/73
NEXT HIGHER ASSY.

SCALE 1/1
SHEET 1 OF 1

[redacted] EQUIPMENT CORPORATION
MAYNARD, MASSACHUSETTS

TITLE: G772 SYSTEM UNIT HARNESS

SIZE E | CODE IA | NUMBER 7009562-0-0 | REV.

DIST

CHANGE NO. | REVISIONS | REV.

DEC FORM NO. DRE 100

E IA 7009562-0-0

LEGEND

REF. DESIGNATION	CONN. BRKT. NO.	MATING CONN	QTY
P18	C-MD-9905761-HG-0	1209550-06	1
P11 THRU P17	C-AD-9905759-0-0	1209540-00	7
P8	C-MD-9905761-H9-0	1209550-09	1
P1 THRU P6, P10	C-MD-9905761-H6-0	1209550-13	7
P9	C-MD-9905761-H12-0	1209550-12	1
P7	C-AD-9905759-0-0	1209540-01	1

ALL BRKT'S ARE MOUNTED WITH #6 WOOD SCREWS

NOTES:

1. USE TIE WRAPS (X) ITEM #10 APPROXIMATELY EVERY THREE (3) INCHES WHEN NECESSARY, AND AT EVERY BREAKOUT POINT.
2. COMPONENTS TO BE LABELED WITH COMPONENT IDENTIFIER, USING BRADY MARKERS.
3. UNLESS OTHERWISE INDICATED PINS (ITEM #7) ARE TO BE USED AT ALL POINTS.
4. FOR POINT TO POINT WIRING REFER TO: D-IC-70095566-0-1 & K-WL-70095566-0-2.
5. TO SUPPORT CONNECTORS (ITEM #1 THRU 6) DURING ASSY USE CONN BRKT'S. AND MATING CONNECTORS DESCRIBED IN LEGEND.
6. IN AREA INDICATED ENCLOSE MAIN HARNESS BUNDLE WITH ZIPPER TUBING (ITEM #21). ZIPPER MUST BE ROUTED ALONG THE OUTSIDE CURVE OF BUNDLE, ENSURE THAT EXCESS TUBING IS TUCKED IN AT END. DO NOT ENCLOSE CABLES (ITEMS 11 & 12)

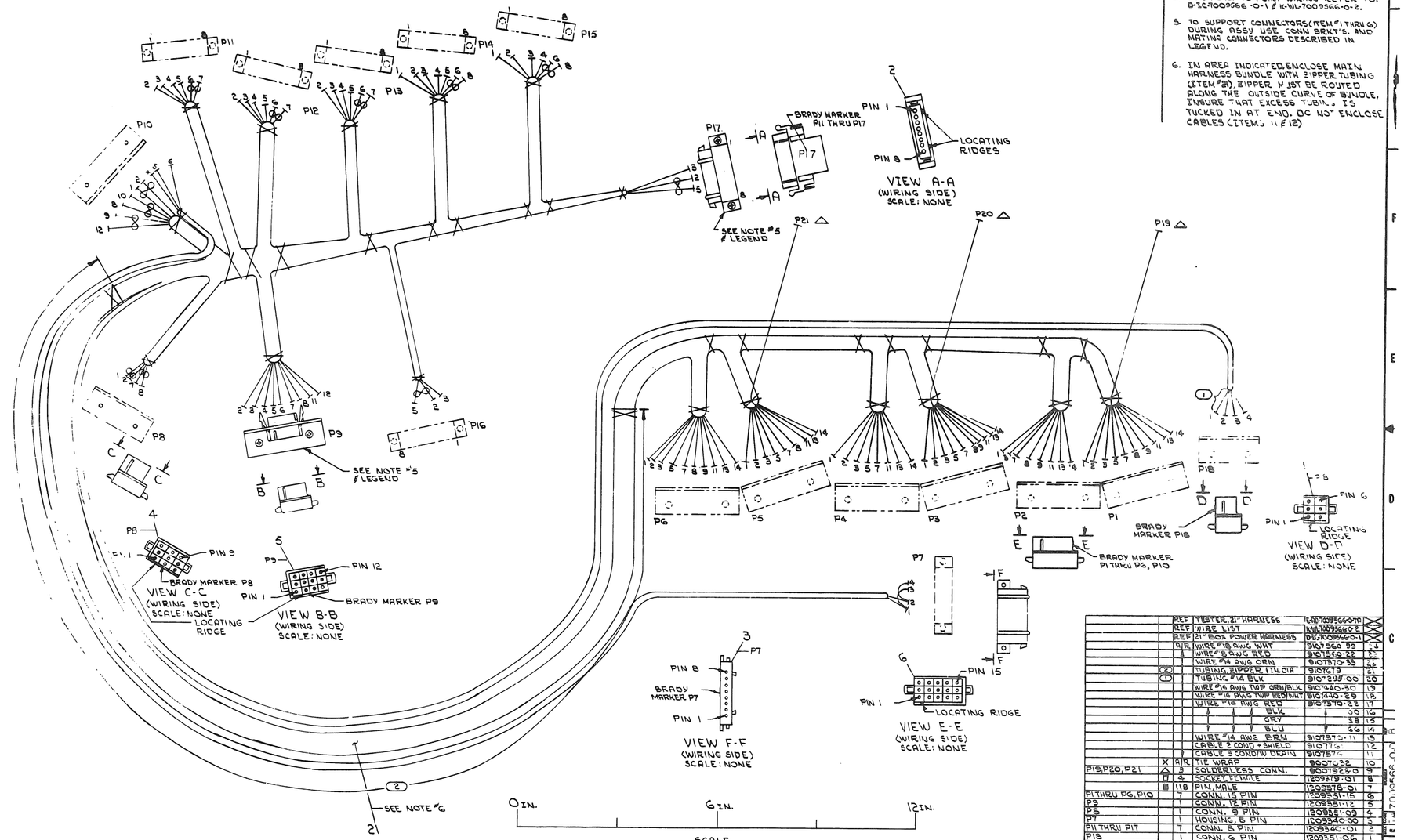

		REF	TESTER, 21" HARNESS		K-WL-70095660-0-1	
		REF	WIRE LIST		K-WL-70095660-2	
		REF	21" BOX POWER HARNESS		D-IC-70095660-1	
		6 R	WIRE #18 AWG WHT		9107560-99	21
			WIRE #18 AWG RED		9107560-32	22
			WIRE #14 AWG ORN		9107570-55	23
			TUBING, ZIPPER, 1.1" DIA		9107613	24
			TUBING #14 BLK		9107239-00	20
			WIRE #14 AWG TWP ORN/BLK		9107340-30	19
			WIRE #14 AWG TWP RED/WHT		9107340-29	18
			WIRE #14 AWG RED		9107570-22	17
			BLK	33		16
			GRY	38		15
			BLU	36		14
			WIRE #14 AWG BRN		9107370-11	13
			CABLE 2 COND + SHIELD		9107772	12
			CABLE 3 COND/W DRAIN		9107572	11
	X	9 R	TIE WRAP		9007032	10
P18, P20, P21	△	3	SOLDERLESS CONN.		9009256	9
	□	4	SOCKET, FEMALE		1209379-01	8
	▣	11B	PIN, MALE		1209378-01	7
P1 THRU P6, P10		7	CONN. 15 PIN		1209551-15	6
P9		1	CONN. 12 PIN		1209551-12	5
P8		1	CONN. 9 PIN		1209551-09	4
P7		1	HOUSING, 8 PIN		1209340-00	3
P11 THRU P17		7	CONN. 8 PIN		1209340-01	2
P18		1	CONN. 6 PIN		1209551-06	1

REF DESIGNATION	SYM	QTY.	DESCRIPTION	PART NO.	ITEM NO.

PARTS LIST

FIRST USED ON OPTION/MODEL: H9660-DE

UNLESS OTHERWISE SPECIFIED DIMENSION IN INCHES. TOLERANCES
DECIMALS: .XXX ±.005, .XX ±.02, .X ±.1
ANGLES: ±0° 30'
REMOVE BURRS AND BREAK SHARP CORNERS. SURFACE QUALITY

MATERIAL: SEE PARTS LIST
FINISH

DRAWN R. Kenner 1-24-75
CHKD G. Hoag 1-24-75
ENG. Wendell Bowen 1/24/75
PROJ. ENG. 1/24/75
PROD. 1/24/75
NEXT HIGHER ASSY.
SCALE 1/1
SHEET OF

DIGITAL EQUIPMENT CORPORATION, MAYNARD, MASSACHUSETTS

TITLE: 21" BOX POWER HARNESS

SIZE E | CODE IA | NUMBER 70095660-0- | REV. 5

DIST.

REVISIONS: 1 70095660-0002 | 1 | 1-17-75 | R. Kenner | V. Bowen

DEC FORM NO. ORE 100