digital EQUIPMENT CORPORATION MAYNARD MASSACHUSETTS

DRAWING DIRECTORY

CUSTOMER PRINT SET INDEX

THIS IS PRINT SET 164

	SEQUENCE	SEQUENCE
DRAWING DIRECTORY	B-DD-H754-Ø	
+20 VOLT REGULATOR	E-CS-H754-0-1	

UNIT VARIATIONS

VAR	TITLE	PRINT SET 1
H754-0	+20 VOLT REGULATOR	X

REVISIONS		
DATE	CHG. NO.	REV
10-75	H754-9	A
11-3	H754-10	B

USED ON OPTION/MODEL

SHEET 1 OF 3

DRN. J.Fleming	DATE 2/21/74	TITLE +20 VOLT REGULATOR
CHK'D. J.Fleming	DATE 2/21/74	
PROJ ENG. E. Whitaker	DATE 3-13-74	
PROD. Jack Downes	DATE 3-14-74	SIZE B · CODE DD · NUMBER H754-Ø · REV B
FIELD SERV. Walt Aubree	DATE 7/25/74	DIST

DEC 10-11231-1063-1A-8972

DRB 106

ELECTRICAL

CUSTOMER PRINT SET 1				MFG. SET	FIND NO.	DRAWING NO.	REV	NO OF SHT	DESCRIPTION	OPTION NO./FILE DATE
X					1	B-DD-H754-Ø	#	3	DRAWING DIRECTORY	
X						E-CS-H754-Ø-1	#	2	+20 VOLT REGULATOR	
						K-CO-H754-Ø-4		-	X-Y COORDINATE HOLE LOCATION	
						D-AH-H754-Ø-5		1	ASSY/DRILLING HOLE LAYOUT	
						B-MH-H754-Ø-6		1	MODULE ECO HISTORY	
						5010531		-	ETCHED CIRCUIT BOARD	
						A-SP-H754-Ø-8		3	MANUFACTURING SPEC	

MECHANICAL

CUSTOMER PRINT SET 1				MFG SET	FIND NO.	DRAWING NO.	REV	NO OF SHT	DESCRIPTION	OPTION NO./FILE DATE
X					1	E-CS-H754-0-1	#	2	+20 VOLT REGULATOR	
						D-PS-1210737-0-0		1	HEAT SINK REGULATOR	
						C-IA-5309758-0-0		1	CAPACITOR BRACKET	
					2	D-IA-5409756-0-0		1	BRACKET REGULATOR	
						A-SS-5309756-0-1		1	SILK SCREEN	
						A-SS-5309756-0-2		1	SILK SCREEN	
						A-SS-5309756-0-3		1	SILK SCREEN	

CUSTOMER PRINT SET CODES		TITLE		SIZE	CODE	NUMBER	REV
	X = PRINT OF DOCUMENT INCLUDED IN PRINT SET C = INCLUDES ALL PRINTS INDICATED ON DOCUMENT S = CONFIDENTIAL AUTHORIZED SIGNATURE REQUIRED	+20 VOLT REGULATOR	SHEET 2 OF 3	B	DD	H754-Ø	B

DPB 108

DEC 16-(325)-1062-2B-R972

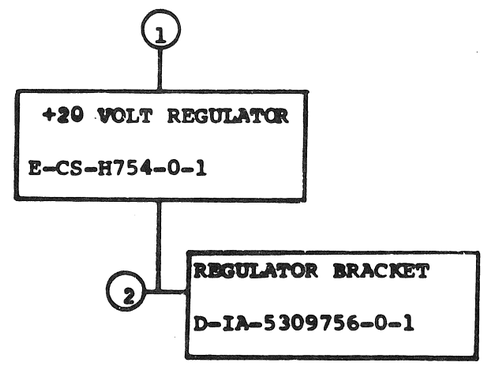

TITLE	SHEET	SIZE	CODE	NUMBER	REV
+20 VOLT REGULATOR	3 OF 3	B	DD	H754-Ø	

DRB 107
DEC 16-(329)-1082-B-[illegible]

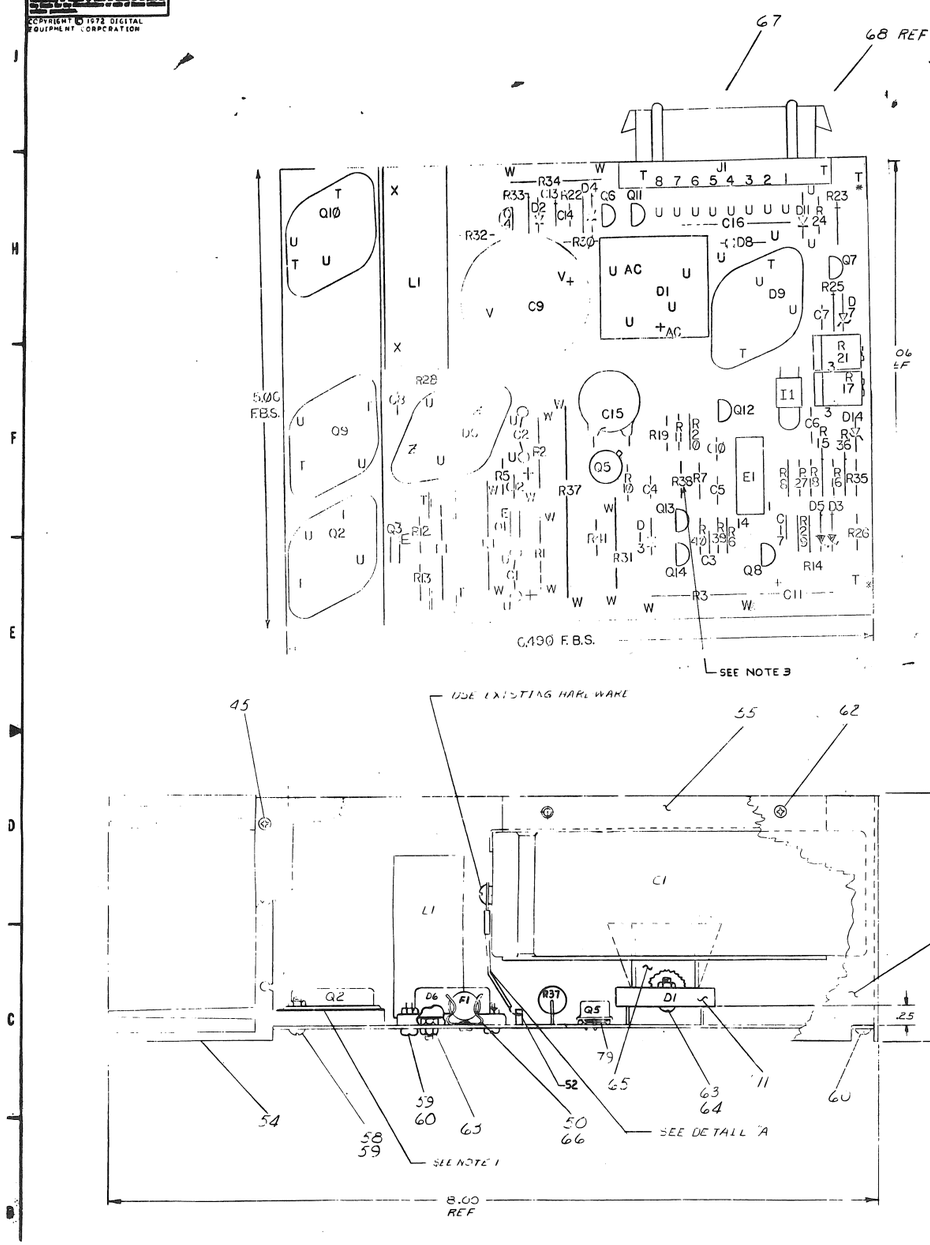

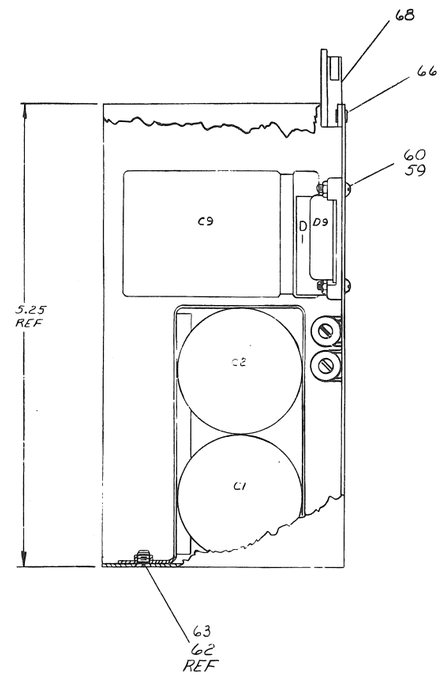

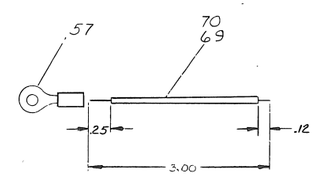

DETAIL A
SCALE : NONE
RED WIRE GOES TO POSITIVE TERMINAL
BLK WIRE GOES TO NEGATIVE TERMINAL

NOTES:
1. APPLY ITEM # 71 (COMPOUND) ON BOTH SIDES OF ITEM # 72 (INSULATOR WASHER) FOR Q2, Q9, Q10. ALSO APPLY BETWEEN ITEM # 11 (DIODE BRIDGE D1). AND ITEM # 65 (HEAT SINK, BRIDGE RECT.)
2. UNLESS OTHERWISE INDICATED: RESISTORS ARE 1/4 W, ±5%. CAPACITORS ARE 100V, ±5%.
3. ADD INSULATION (9107256-11) TO BOTH LEADS OF R38 TO AVOID SHORT TO ETCH.

DELETED COMPONENTS	
RESISTORS	R9
DIODES	D10, D12

QTY	REF DESIGNATION	DESCRIPTION	PART NO.	ITEM NO.
1	Q1	TRANSISTOR 2N4920-1	1509605-1	92
1	R13	RES.27Ω 1/2W 5% FUSIBLE	131296-01	91
NR		INSULATION	9107256-11	90
1	R39	RES 220 1/4W 5%	1300271	89
1	R37	RES. .1 10W 1%	1309108	88
1	R38	RES.1K 15 THERMISTOR	1310071	87
1	C16	CAP. 100UF 25V	1002781	86
1	Q10	TRANSISTOR MJ900	1508712	85
1	Q9	TRANSISTOR MJ3040	1511349	84
1	C13	CAP. 100 PF 100V ±5% DM	1000216	83
				82
2	Q4, Q14	TRANSISTOR MPS HD	1510765	81
1	D2	DIODE 1N283	1100100	80
2	(UNDER Q5 & R21)	TRANSIPAD	9032205	79
1	R31	RES .1522 2W 10%	1310127	78
2	C14, C17	CAP. 1000 UF 100V, ±5% DM	1000042	77
1	R22	RES 909Ω 1/4W 1%	1302165	76
2	R39, R8	RES 1.78K 1/8W ±1%	1302612	75
1	R11	RES 15K 1/4W ±5%	1300396	74
1	R20	RES 470Ω 1/4W ±5%	1300316	73
3		WASHER INSULATOR	9008221	72
A/R		COMPOUND THERMAL	9000258	71
A/R		WIRE #22 STRANDED PVC 1 NP (BLK)	9107380 00	70
A/R		WIRE #22 STRANDED PVC 1 NS (RED)	9107380 22	69
1	J1	MATE-N-LOCK CONN 8 PIN	1209340	[illegible]
8		PIN, SOCKET, MATE-N-LOCK	1209456	67
4		EYELET SS 4-3	9008132	66
1		HEAT SINK BRIDGE RECTIFIER	1210807	65
1		SCR PHL PAN HD 6-32 X ½	9008024 1	64
5		KEPS NUT 8-32	9008185	63
2		SCR PHL FLAT HD, 8-32 X 5/16	9008021 2	62
4		SCR PHL PAN HD 8-32 X 3/8	9008000 3	61
4		SCR PHL PAN HD. 4-40 X 3/8	9008011 1	60
10		KEPS NUT 4 40	9008557	59
6		SCR PHL PAN HD 4 40 X ¼	9008013 1	58
4		TERMINAL LUGS	9007930	57
1		COVER CAP	7-AB-0000108-0-0	56
1		I 5 CAP BRKT	C-IA-5300158-0-0	55
1		HEAT SINK REGULATOR	D PS-1210731-0-0	54
1		BRACKET REG	D IA-5309156-0-0	53
4		SPLIT LWG	9008135	52
1	Q8	TRANSISTOR 2N6028	15 10877	51
2		FUSE CLIP	9007203	50
1	F1	FUSE 2	1213237-00	49
1	L1	REACTOR 150 UHY	15 10940	48
1	E1	INTEGRATED CIRCUIT 723	15 10415	47
6	Q7, Q6, Q11, Q12, Q13	TRANSISTOR MPS A13	15 10708	46
4		SCR PHL FLAT HD 4-40 X ½ SELF TAPPING	9008142-02	45
1	Q5	TRANSISTOR DEC3500	15-03209	44
1	Q7	TRANSISTOR 2N6028	15 10869	43
1	Q3	TRANSISTOR 2N4920	15-08905	42
1	R17 R21	RES VARIABLE 200Ω ±20% HOT	13 10852	41
2	R23, R36	RES 5.1Ω ±5%	13-09422	40
1	R18	RES .237 1/8W 1%	1304857	39
				38
2	R14, R5	RES 5.21 ±5%	13 01527	37
1	R10	RES 150Ω ±5%	13 00250	36
REF		ASSY/DRILLING HOLE LAYOUT	D-AH-H754-0-5	35
2	R7, R40	RES 2K 1/4W 5%	1302368	34
2	R6, R15	RES 12K ±5%	13-00468	33
6	R15 R25 R30, R24, R35, R41	RES 100Ω ±5%	13-00221	32
1	R12	RES 68Ω 1/2W ±5% FUSIBLE	131496-68	31
				30
1	R27	RES 10K Ω 1/8W 1%	1303312	29
1	R32	RES 3.9K ±5%	13-00444	28
1	R16	RES 287Ω 1/8W 1%	1305124	27
1	R23	RES 18K ±5%	13-02465	26
1	C11	CAP 2.2 UF 35V 10% TANT	10-02431	25
1	R4	RES 5W 3 .03 Ω	1310876-1	24
1	R3	RES 1.5K 5W ±5%	13-01897	23
1	R34	RES 47 2W ±5%	13-01258	22
1	R26	RES 1.5K ±5%	13-00391	21
2	R1, R2	RES 3.9K 1W 10%	13-02927	20
1	R28	RES 10Ω 1/4W ±5%	1301317	19
2	D11, D12	DIODE 1N5624	1110420	18
				17
1	D14	DIODE 752A ZENER	1108808	16
1	D9	DIODE MCR 849 P-2	11-09485	15
1	D7	DIODE 1N3700 24 V	11-10856	14
1	D6	DIODE, 20 AMP FAST REC	11-10715	13
1	D3	DIODE 1N4744, ZENER, 15V	11-09848	12
1	D1	DIODE MDS 3514	11-10114	11
3	D5, D13 D4	DIODE D664	11-30114	10
1	C15	CAP .1UF 100V 20% DISC	1000030	9
1	C9	CAP 2.2K UF 30V 6% AL. EL.	10-16859	8
5	C7 C8 C4 C10, C3	CAP .01UF 50V 20% DISC.	10-01810-01	7
1	C6	CAP 2700PF 100V 5% DM	10-01637	6
1	C5	CAP 680PF 100V 5% DM	10-00012	5
1	F1	LAMP, 28V, 40 MA	12-11239	4
1	C12	CAP 05UF 25V DISC	10-01774	3
2	C1, C2	CAP 5.8KUF 50V 6% AL. EL.	10-11863	2
1		ETCHED CIRCUIT BOARD	5010531	1
		MODULE ECO HISTORY	R-MH-H754-0-6	REF
		X-Y COORDINATE HOLE LOCATION	R-CO-H754-0-4	REF

PARTS LIST

ETCH BOARD REV	H		
D664	1N3606		

DEC NO.	EIA NO.	DEC NO.	EIA NO.

SEMICONDUCTOR CONVERSION CHART

IC TYPE	GND	+5V
GND AND 5V ARE USUALLY PIN 7 AND 14 RESPECTIVELY EXCEPTIONS ARE STATED ABOVE		

IC PIN LOCATIONS

FROM	TO	FROM PT	TO PT

JUMPER LIST

REV	DATE	DESCRIPTION	BY
J	12-6-74		
H	6-18-74		
G	5-13-74		
F	4-16-74		
E	3-20-74		
D	2-22-74		
C	2-6-74		
B	1-31-74		
A	1-25-74		

DIGITAL EQUIPMENT CORPORATION
MAYNARD, MASSACHUSETTS

TITLE: + 20 VOLT REGULATOR

NEXT HIGHER ASSY

SCALE

SHEET 1 OF 2

SIZE/CODE E | NUMBER CS H754-0-1 | REV.

DIST.

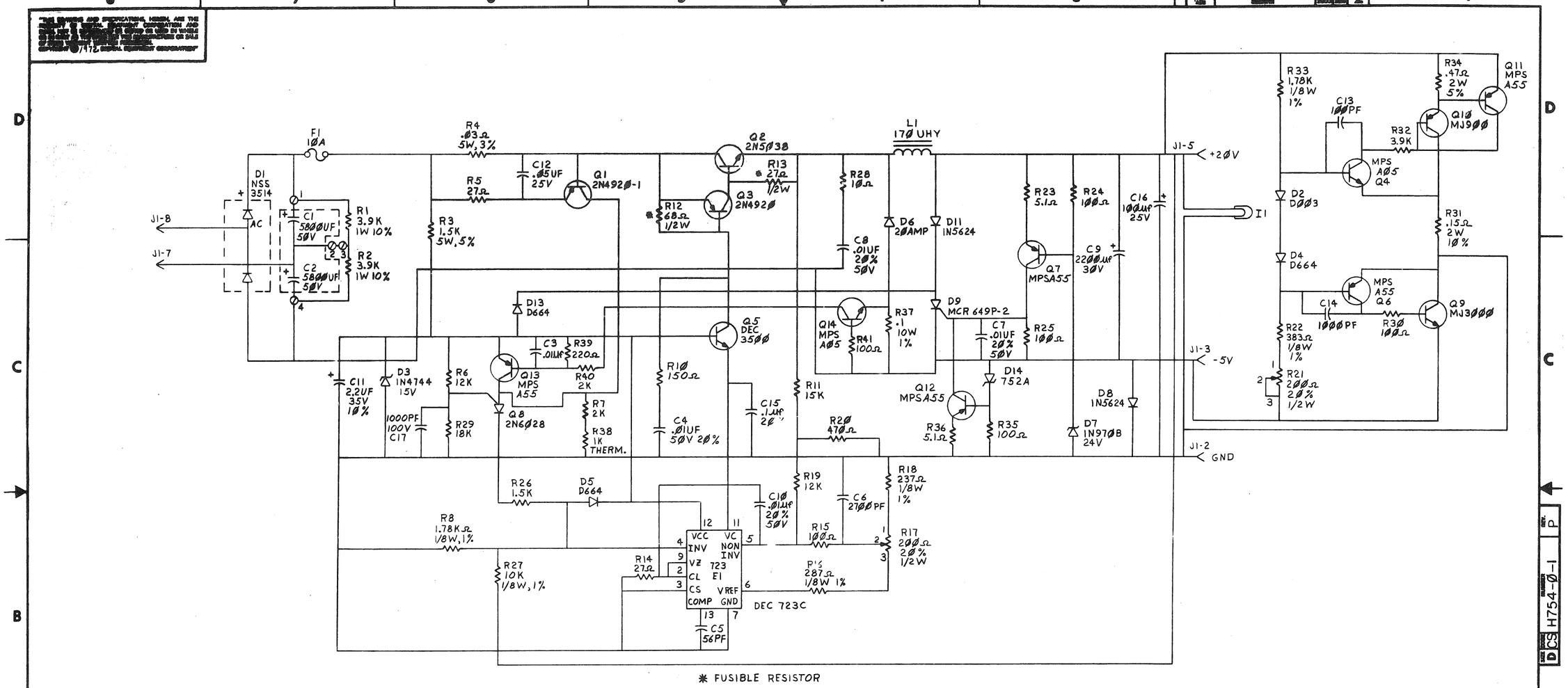

DRN. M. BISSONNETTE	8-29-72	FIRST USED ON H754
CHK'D R. VOWLES	12-17-72	TITLE +20 VOLT REGULATOR
ENG. R. BURTON	5-7-73	
PROJ. ENG. R. BURTON	5-7-73	
PROD. L. BAPTISTE	5-9-73	
NEXT HIGHER ASSY.		
SCALE —		SIZE D · CODE CS · NUMBER H754-0-1 · REV. P
SHEET 2 OF 2		DIST.

REVISIONS: REV. · CHANGE NO. · CHK

DCS H754-0-1 REV. P

NOTES:

1. FOR HAND WIRING INFORMATION SEE WIRE TABLE ON SHEET 3.
2. MATE-N-LOK FIXTURES (ITEM 28) MUST BE USED DURING WAVE SOLDERING OF J2, J3-J12
3. WIRE JUMPERS ON CIRCUIT BOARD ARE PART OF SIGNAL PATHS. THEY ARE NOT FOR OPTIONS
4. PLACE DECALS (ITEM 30 & 31) APPROX. AS SHOWN.

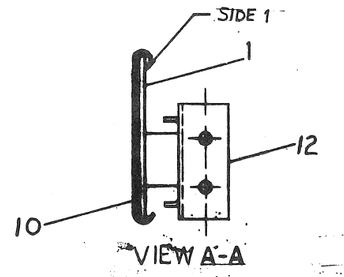

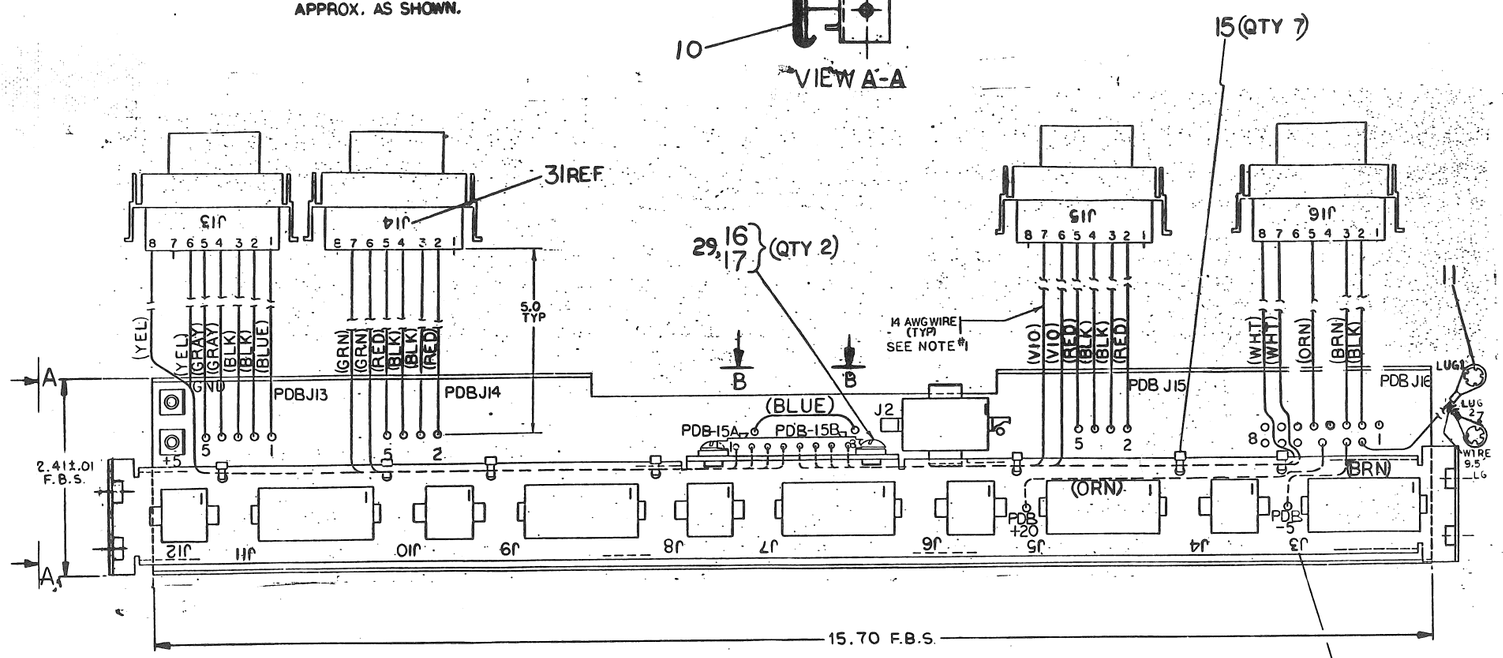

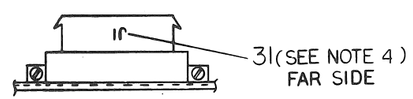

VIEW B-B
SCALE: NONE

QTY	REF. DESIGNATION	DESCRIPTION	PART NO.	ITEM NO.
1		ETCHED CIRCUIT BOARD	D-IA-5[illegible]	1
5	J4, J6, J8, J10, J12	CONN, 6 PIN MATE-N-LOK (FEMALE)	1209380-06	2
1	J1	CONN, 8 PIN MATE-N-LOK (FEMALE)	1209340-00	3
5	J3, J5, J7, J9, J11	CONN, 15 PIN MATE-N-LOK (FEMALE)	1209350-15	4
1	J2	CONN, 12 PIN MATE-N-LOK (FEMALE)	1209350-12	5
4	J13 THRU J16	CONN, 8 PIN MATE-N-LOK (MALE)	1209340-01	6
24	(J13 THRU J16)	PIN, MATE-N-LOK	1209378-01	7
8	(J1)	PIN, MATE-N-LOK	1209379-01	8
117		PIN, MATE-N-LOK PC MOUNT	1209456	9
1		SHIELD	C-MD-7412[illegible]	10
2		GROUND LUG	9000150	11
1		BRACKET, CONN MTG	D-MD-7411[illegible]	12
2		EYELET	9009000	13
2		FASTON TAB	9008219-0	14
7		CABLE TIE .12 WIDE	9007880	15
2		SCREW, PHHD TRUSS 6-32 x .375	9006022-3	16
2		WASHER, INT TOOTH #6	9006633	17
1 FT		WIRE #14 AWG STRD (ORN)	9107370-33	18
1 FT		WIRE #14 AWG STRD (BRN)	9107370-11	19
2 FT		WIRE #14 AWG STRD (RED)	9107370-22	20
1 FT		WIRE #14 AWG STRD (GRY)	9107370-88	21
4 FT		WIRE #14 AWG STRD (BLK)	9107370-00	22
1 FT		WIRE #14 AWG STRD (BLU)	9107370-66	23
3 FT		WIRE #14 AWG STRD (YEL)	9107370-44	24
2 FT		WIRE #14 AWG STRD (GRN)	9107370-55	25
2 FT		WIRE #14 AWG STRD (VIO)	9107370-77	26
2 FT		WIRE #14 AWG STRD (WHT)	9107370-99	27
REF		MATE-N-LOK FIXTURES	C-IA-9305937-0-0	28
2		FLAT WASHER #6	9006646	29
A/R	J3 THRU J12	DECAL, PWR CONN.	A-DC-7409873-01	30
A/R	J1, J13 THRU J16	DECAL, PWR CONN.	A-DC-7409873-02	31

PARTS LIST

IC TYPE	GND	+5V

GND AND 5V ARE USUALLY PIN 7 AND 14 RESPECTIVELY EXCEPTIONS ARE STATED ABOVE

IC PIN LOCATIONS

FIRST USED ON OPTION MODEL
BAII-K

ETCH BOARD REV. D

DEC NO.	EIA NO.	DEC NO.	EIA NO.

SEMICONDUCTOR CONVERSION CHART

REV.	CHANGE NO.	ORIGINATED	CHK	REVISIONS
D	5410864-1		X	
C				
B	5410864-00003	M. CARRAFIELLO		
A	5410864-00002	M. CARRAFIELLO		

DRN. R. Beasley DATE 6/14/74
NEXT HIGHER ASSY D-UA-BAII-K-Ø
SCALE NONE
SHEET 1 OF 3

TITLE POWER DISTRIBUTION BOARD

SIZE D CODE CS NUMBER 5410864-0-1 REV. H

DIST.

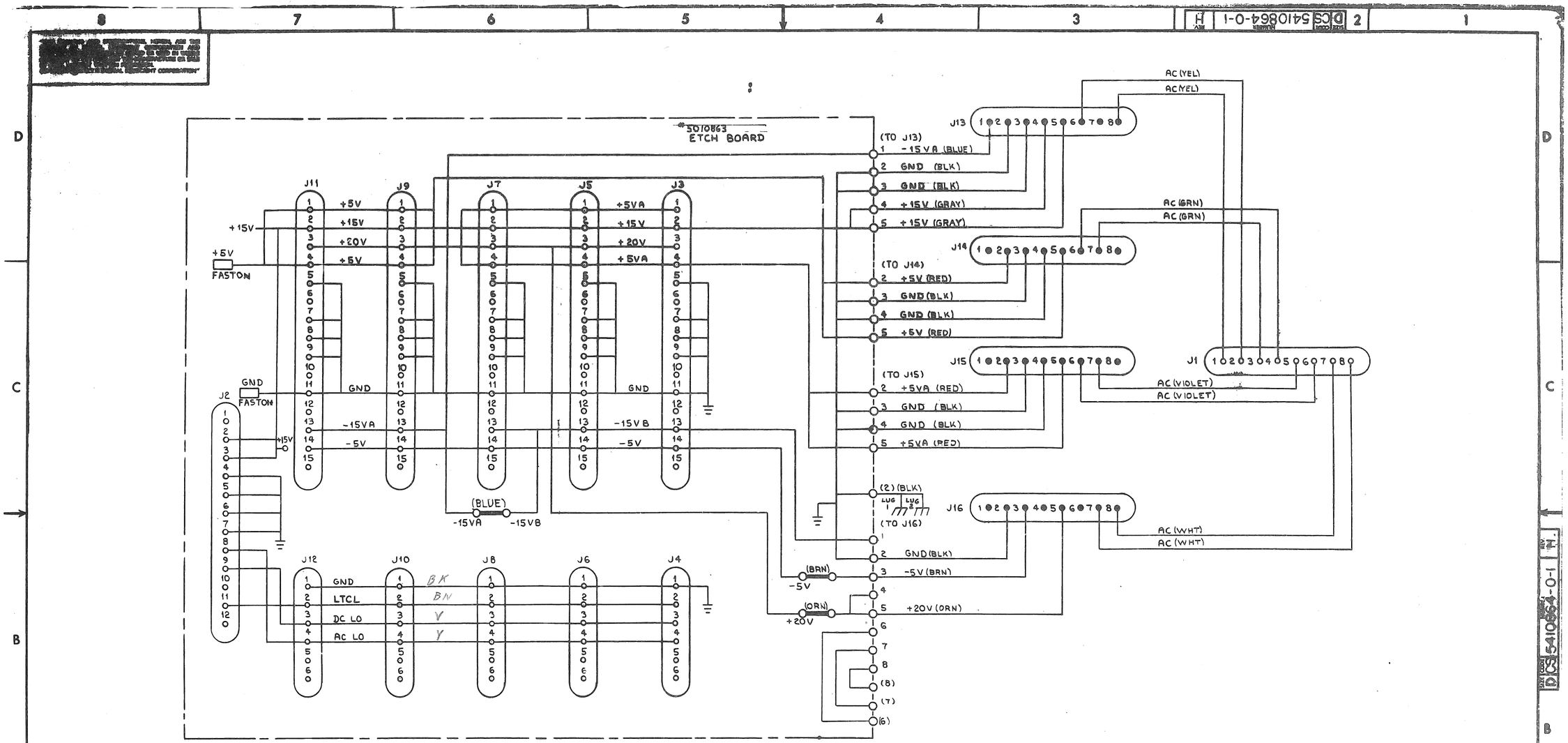

REVISIONS		
CHK	CHANGE NO.	REV.

TITLE: PWR DIST BOARD

SIZE D | CODE CS | NUMBER 5410864-0-1 | REV. M

SCALE NONE | SHEET 2 OF 3 | DIST.

WIRE TABLE

ITEM NO	DESCRIPTION AWG	DESCRIPTION COLOR	FROM CONNECTION	FROM WITH	TO CONNECTION	TO WITH	LENGTH	SIGNAL NAME
24	14	YEL	J1-1	8	J13-8	7	9.4"	AC/H745
24		YEL	J1-2		J13-6		12.5"	AC/H745
25		GRN	J1-3		J14-7		11"	AC/H744-1
25		GRN	J1-4		J14-6		11"	AC/H744-1
26		VIO	J1-5		J15-7		10"	AC/H744-2
26		VIO	J1-6		J15-6		10"	AC/H744-2
27		WHT	J1-7		J16-8		16.25"	AC/H754
27		WHT	J1-8		J16-7		16.25"	AC/H754
23		BLU	PDB J13-1	SOLDER	J13-1		5"	-15V
22		BLK	PDB J13-2		J13-2			GND
22		BLK	PDB J13-3		J13-3			GND
21		GRY	PDB J13-4		J13-4			+15V
21		GRY	PDB J13-5		J13-5			+15V
20		RED	PDB J14-2		J14-2			+5V
22		BLK	PDB J14-3		J14-3			GND
22		BLK	PDB J14-4		J14-4			GND
20		RED	PDB J14-5		J14-5			+5V
20		RED	PDB J15-2		J15-2			+5V
22		BLK	PDB J15-3		J15-3			GND
22		BLK	PDB J15-4		J15-4			GND
20		RED	PDB J15-5		J15-5			+5V
22		BLK	PDB J16-2		J16-2			GND
19		BRN	PDB J16-3		J16-3			-5V
18		ORN	PDB J16-5		J16-5	7	5"	+20V
23		BLU	PDP-15A		PDB-15B	SOLDER	1.75	-15V
18		ORN	PDB J16-5		PDB +20V		5"	+20V
19		BRN	PDB J16-3		PDB -5V		2"	-5V
22	14	BLK	LUG 1	SOLDER	PDB J16-2	SOLDER	6"	GND
22	14	BLK	LUG 1	SOLDER	LUG 2	SOLDER	9.5"	GND

REVISIONS		
CHK	CHANGE NO.	REV.

TITLE PWR DIST BOARD

SCALE NONE | SHEET 3 OF 3

SIZE D | CODE CS | NUMBER 5410864-0-1 | REV. H

DIST.

DEC FORM NO. F 127

LEGEND	
NUMBER	VARIATION
7012500-0	120V
7012500-1	240V

WIRE TABLE (7012500-0)

ITEM NO.	DESCRIPTION AWG	DESCRIPTION COLOR	FROM CONNECTION	FROM WITH	TO CONNECTION	TO WITH	REMARKS
2	14	BRN	P1-B	—	B	6	AC LINE
2	14	LT BLU	P1-A	—	A	6	AC NEUTRAL
2	14	GRN/YEL	P1-C	—	C	6	AC SAFETY GND

WIRE TABLE (7012500-1)

ITEM NO.	DESCRIPTION AWG	DESCRIPTION COLOR	FROM CONNECTION	FROM WITH	TO CONNECTION	TO WITH	REMARKS
2	14	BRN	P1-B	—	B	6	LINE
2	14	LT BLU	P1-A	—	A	6	NEUTRAL
2	14	GRN/YEL	P1-C	—	C	6	AC SAFETY GND

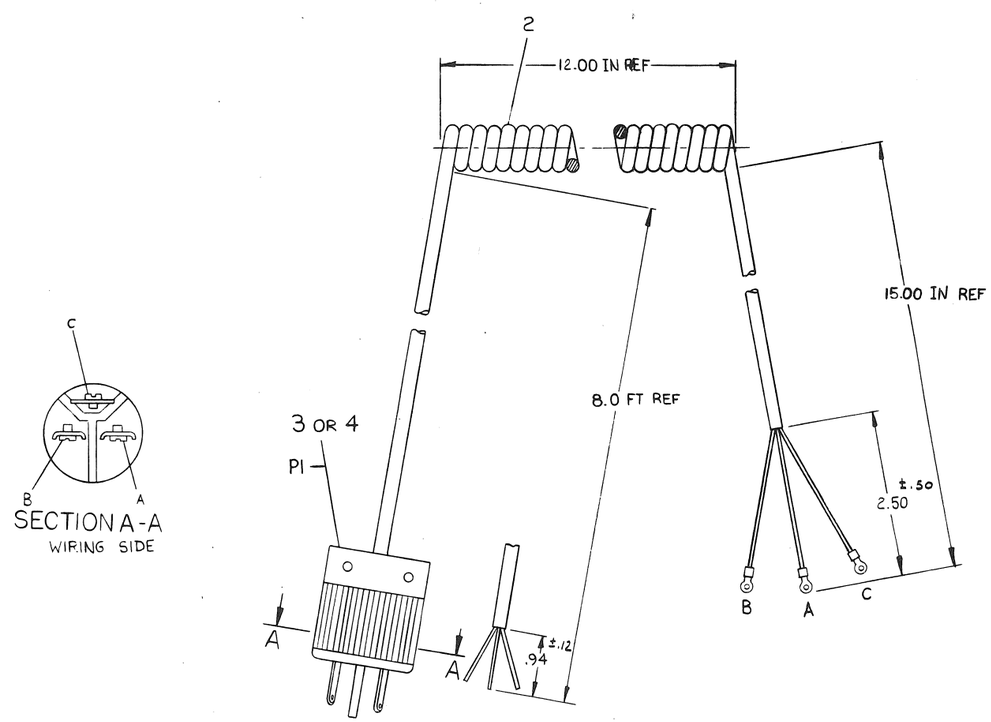

QUANTITY & VARIATION		DESCRIPTION	DWG./PART NO.	ITEM NO.
3	3	TERMINAL, RING TONGUE	9007928	6
~~2~~	~~2~~	~~TERMINAL, QUICK CONNECT~~	~~9007919-0~~	~~5~~
1	-	PLUG, 240 V	9008853	4
-	1	PLUG, 120 V	9008938	3
1	1	POWER CORD	1700065-0	2
~~-~~	~~1~~	~~POWER CORD~~	~~1700065-1~~	~~1~~
7012500-1	7012500-0			

UNLESS OTHERWISE SPECIFIED DIMENSIONS ARE IN INCHES

ANGLES ±0° 30' — CLASS OF ACCURACY (CHECK ONE) — SURFACE QUALITY IN MICROINCHES — PREFERRED

THIRD ANGLE PROJECTION

REMOVE BURRS AND BREAK SHARP CORNERS

DO NOT SCALE DWG

MATERIAL: SEE PARTS LIST

FINISH: —

DRN. R. Beardsley 2-27-76
CHK'D
ENG. Paul Pandiscia 3 May 76
PROJ. ENG.
PROD.

NEXT HIGHER ASSY.

SCALE NONE

SHEET 1 OF 1

FIRST USED ON 8A11-K

TITLE: POWER CORD 120V 240V

SIZE	CODE	NUMBER	REV.
D	IA	7012500-0-0	A

SHT.

REVISIONS			
CHK.	CHANGE NO.	REV.	
	7009811-0004	A	

R. WOLF

DIA 7012500-0-0 A

NOTES:

1. ~~THE RIG.C4,C9,&C11 ARE NOT USED ON BASIC BOARDS BUT ARE REPEATED FOR PLANNED FUTURE MODULE VARIATIONS.~~
2. * * TOTAL +15V AND +8V CURRENT NOT TO EXCEED 40 AMPERES.
3. W1 (TEST JUMPER) MAYBE TEMPORARILY REMOVED WHILE TROUBLE-SHOOTING TO DETERMINE IF LOSS OF 15V IS DUE TO CROW-BAR CIRCUITRY. BUT MUST BE IN THE BOARD FOR NORMAL OPERATION.
4. ~~NON-ITEMIZED PARTS SUPPLIED WITH KIT.~~
4. YA VERSION DOES NOT CONTAIN +15VDC REG.
5. A) FOR STANDARD VERSION USE SHEETS 1,2,3,&4 OF THIS DWG.
   B) FOR YA VERSION USE SHEETS 1,2,&3 OF THIS DWG.
6. WIRES MUST NOT EXTEND BEYOND THE DIMENSIONS OF THE BOARD.

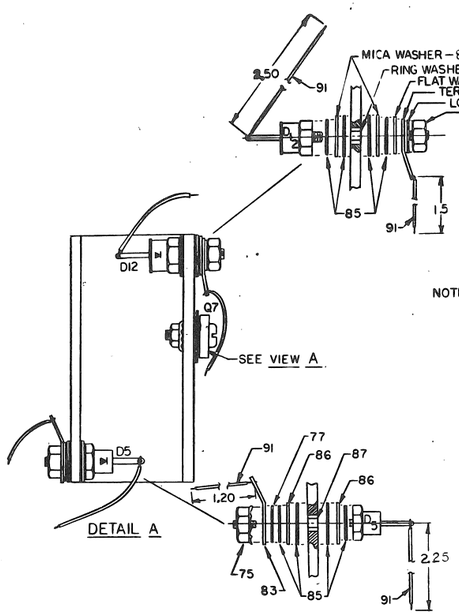

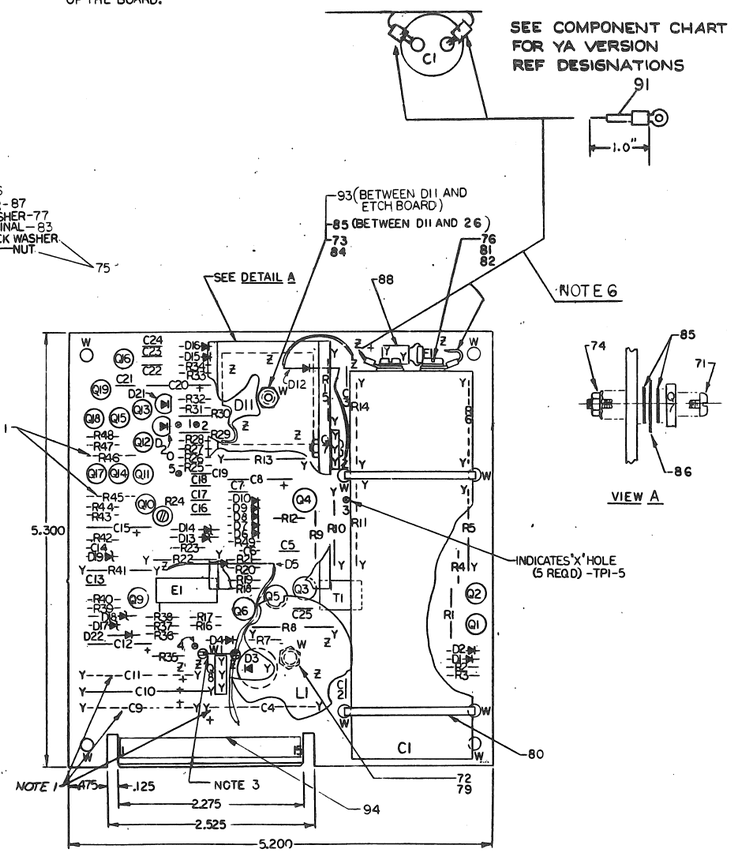

COMPONENT CHART -YA VERSION		
3	C19,C22,C23	7
1	C8	8
1	D19	14
7	D6,D7,D8,D9,D15,D16,D22	17
1	D10	18
1	R49	30
2	R44,R48	40
1	R28	50
4	Q3,Q5,Q10,Q19	63
4	Q11,Q12,Q13,Q16	66
QTY	REF. DESIGNATION	ITEM

IC TYPE	GND	+5V
GND AND 5V ARE USUALLY PIN 7 AND 14 RESPECTIVELY EXCEPTIONS ARE STATED ABOVE		
IC PIN LOCATIONS		

YA	QTY	REF. DESIGNATION	DESCRIPTION	PART NO.	ITEM NO.
REF	REF		X-Y COORDINATE HOLE LOCATION	K-CO-5411086-0-4	1
REF	REF		ASSY/DRILLING HOLE LAYOUT	D-AM-5411086-0-5	2
REF	REF		MODULE ECO HISTORY	D-MM-5411086-0-0	3
1	1		ETCHED CIRCUIT BOARD	5011085	4
0	1	C2	CAPACITOR 50PF 100V 5%	1000012	5
4	4	C16,C17,C18,C21	CAPACITOR 330PF 100V 5%	1000029	6
3	5	C3,C13,C19,C22,C23	CAPACITOR .01uf 100V 20%	1001010-01	7
1	3	C6,C12,C15	CAPACITOR 2.2uf 35V 10%	1002431	8
2	2	C8,C25	CAPACITOR 10PF 100V 5%	1002000	9
1	1	C20	CAPACITOR 1.5uf 35V 10%	1008725	10
4	4	C5,C7,C14,C24	CAPACITOR .22uf 50V -20%+80%	1010274-01	11
0	1	C10	CAPACITOR 500uf 25V -10% +75%	1010609-01	12
1	1	C1	CAPACITOR 8400uf 50V -10% +75%	1010851	13
1	2	D2,D19	DIODE 1N748A	1100122	14
0	1	D5	DIODE 1N2970B	1100134	15
0	1	D3	DIODE MR1033B	1103341	16
7	8	D1,D6,D7,D8,D9,D15,D16,D22	DIODE D672	1105275	17
1	2	D10,D17	DIODE 1N4744	1105648	18
0	1	D4	DIODE 1N4004	1105796	19
0	1	D12	DIODE 1N3000	1109440	20
0	1	D18	DIODE 1N967A	1110000	21
2	2	D20,D21	DIODE MV5054-1 (LIGHT EMITTING)	1110324	22
1	1	D11	DIODE BRIDGE 200V 20A	1110714	23
2	2	D13,D14	DIODE 1TTZ420	1110925	24
0	1	F1	FUSE PICO 5A	1205747	25
0	1		HEAT SINK	1211906	26
0	1	R23	RESISTOR 47 1/4W 5%	1300202	27
0	2	R7,R40	RESISTOR 100 1/4W 5%	1300229	28
0	1	R41	RESISTOR 100 1W 5%	1300232	29
1	3	R4,R12,R49	RESISTOR 220 1/4W 5%	1300271	30
0	1	R14	RESISTOR 220 2W 10%	1300278	31
0	1	R11	RESISTOR 680 2W 5%	1300348	32
2	2	R18,R20	RESISTOR 1K 1/4W 5%	1300365	33
0	1	R1	RESISTOR 1.5K 1/2W 5%	1300394	34
0	1	R10	RESISTOR 2.2K 1W 10%	1300420	35
1	1	R15,	RESISTOR 3.3K 1W 10%	1300437	36
0	1	R3	RESISTOR 3.3K 1/4W 5%	1300430	37
2	2	R43,R47	RESISTOR 10K 1/4W 5%	1300479	38
0	1	R37	RESISTOR 10 1/4W 5%	1301317	39
2	3	R2,R44,R48	RESISTOR 750 1/4W 5%	1301401	40
0	1	R38	RESISTOR 680 1/4W 5%	1301424	41
0	1	R16	RESISTOR 22K 1/4W 5%	1301608	42
1	1	R13	RESISTOR 1K 2W 5%	1301952	43
0	1	R9	RESISTOR 27 1/2W 5%	1302253	44
2	2	R19,R21	RESISTOR 30K 1/4W 5%	1302394	45
0	1	R36	RESISTOR 511 1/4W 1%	1302411	46
0	1	R39	RESISTOR 909 1/4W 1%	1302885	47
1	1	R25	RESISTOR 3.16K 1/4W 1%	1303045	48
1	1	R8	RESISTOR 470 2W 5%	1303062	49
1	2	R17,R28	RESISTOR 1K 1/4W 1%	1303114	50
1	1	R31	RESISTOR 2.61K 1/4W 1%	1303303	51
0	1	R42	RESISTOR 10K 1/4W 1%	1303312	52
2	2	R33,R34	RESISTOR 5.11K 1/4W 1%	1304054	53
1	1	R30	RESISTOR 9.09K 1/4W 1%	1304065	54

PARTS LIST

FIRST USED ON OPTION MODEL

ETCH BOARD REV. D

DEC NO.	EIA NO.	DEC NO.	EIA NO.

SEMICONDUCTOR CONVERSION CHART

REV.	CHANGE NO.	REVISIONS
J	5411086-00005	R. Zimmer 23 JAN 76; E. LOYA; N. Abramson 14 Jan. '76; SR 5411086-00005 J; Neill Boen 5/8/75; V. BOAEN
H	5411086-00004	J. Lastras 5-28-75; SR 5411086-00004 H; Neill Boen 4/4/75; V BOAEN
F	5411086-00003	C. West 4-16-75; 5411086-00003 F; V BOAEN
E	5411086-00002	Neil Boen 5-11-75; 5411086-00002 E; Neill Boen 4/4/75; V BOAEN
D	5411086-00001	Clark 2-6-75; 5411086-00001 D; ORIGINATED
C		

DRN. J. Vincent DATE 10-9-74
CHK'D. DATE
ENG. DATE
PROJ. ENG. DATE
PROD. ENG. DATE
NEXT HIGHER ASSY
SCALE
SHEET 1 OF 4

digital

TITLE PWR. LINE MONITOR/15V REG.

SIZE	CODE	NUMBER	REV.
D	CS	5411086-0-1	J

DIST.

NOTES:

YA	QTY	REF DESIGNATION	DESCRIPTION	PART NO.	ITEM NO.
1	1	R29	RESISTOR 3.40K 1/4W 1%	1300114	98
1	1	R26	RESISTOR 5.62K 1/4W 1%	1300120	99
1	1	R27	RESISTOR 4.99K 1/4W 1%	1300324	07
0	1	R35	RESISTOR 24.9K 1/4W 1%	1300499	00
0	1	R24	RESISTOR 200 20% 62PR	1300190-10	00
1	1	R32	RESISTOR 10.2K 1/4W 1%	1300412	00
0	2	R5,R6	RESISTOR .2 5W 5% WW	1300004	01
0	1	Q7	TRANSISTOR MJE2955	1510095	02
4	6	Q2,Q3,Q5,Q8,Q10,Q19	TRANSISTOR MPSA05	1510705	03
0	2	Q4,Q9	TRANSISTOR MPS A56	1510706	04
0	1	Q6	TRANSISTOR 2N 4441	1500007	05
4	5	Q1,Q11,Q12,Q13,Q16	TRANSISTOR 2N 4250	1500142	06
4	4	Q14,Q15,Q17,Q18	TRANSISTOR 2N 5433	1511000	07
0	1	L1	INDUCTOR, 500 uh	9011000	08
1	1	T1	TRANSFORMER	1012020	09
0	1	E1	I.C. DEC 723	1910415	70
0	1		SCREW, PHM #4-40 X 7/16 LG.	9000012-1	71
0	1		SCREW, PHM #8-32 X 1/4 LG.	9000020-1	72
0	1		SCREW, PHM #8-32 X 7/8 LG.	90D6027-1	73
0	1		KEP NUT #4-40	9000067	74
0	2		KEP NUT #10-32	9000006	75
2	2		WASHER, ITTLKUR #10	9000035	76
0	2		WASHER, FLAT	9000000	77
0	2	(W1)	SPLIT LUG	90D6051	78
0	1		SPACER, 1/4AF X 1/2	9000044	79
4	4		CABLE TIE	9007000	80
2	2		TERMINAL	9007000	81
2	2		SCREW, PHM #10-32 X 1/4 LG.	9000007-1	82
0	2		TERMINAL	9000150	83
0	1		KEP NUT #6-32	9000105	84
0	A/R		COMPOUND, THERMAL JOINT	9000200	85
0	5		WASHER. MICA	9000424	86
0	2		WASHER, RING	9000440	87
0	1		FUSE HOLDER	9000141	88
1	1	R22	RESISTOR, 330, 2W 10%	TBD	89
0	1	W1	JUMPER	9000105	90
2	12		WIRE #18 STRANDED BLK	9107500-0-0	91
REF	REF		MODULE TEST PROCEDURE	A-SP-5411086-0-2	92
1	1		WASHER, RING	9006713	93
1	1		.010 INCH SHIM	7413721-0-0	94
REF	REF		ENG. SPEC-AND TEST PROC.	A-SP-5411086-0-3	95

FIRST USED ON OPTION MODEL

PARTS LIST

ETCH BOARD REV D

IC TYPE	GND	+ 5V

GND AND 5V ARE USUALLY PIN 7 AND 14 RESPECTIVELY EXCEPTIONS ARE STATED ABOVE

IC PIN LOCATIONS

CHANGE NO.	DEC NO.	EIA NO.	DEC NO.	EIA NO.

REVISIONS

SEMICONDUCTOR CONVERSION CHART

DRN. J. Vincent DATE 10-9-74
CHK'D. F. Tsiganis DATE 10-9-74
ENG. Howell Brown DATE 10/9/74
PROJ. ENG. Howell Brown DATE 10/9/74
PROD. R.K. Johnson DATE 10/9/74
NEXT HIGHER ASSY
SCALE —
SHEET 2 OF 4

digital EQUIPMENT CORPORATION MAYNARD MASSACHUSETTS

TITLE PWR. LINE MONITOR/15V REG.

SIZE D CODE CS NUMBER 5411086-0-1 REV. J

DIST.

FORM NO. 135-B

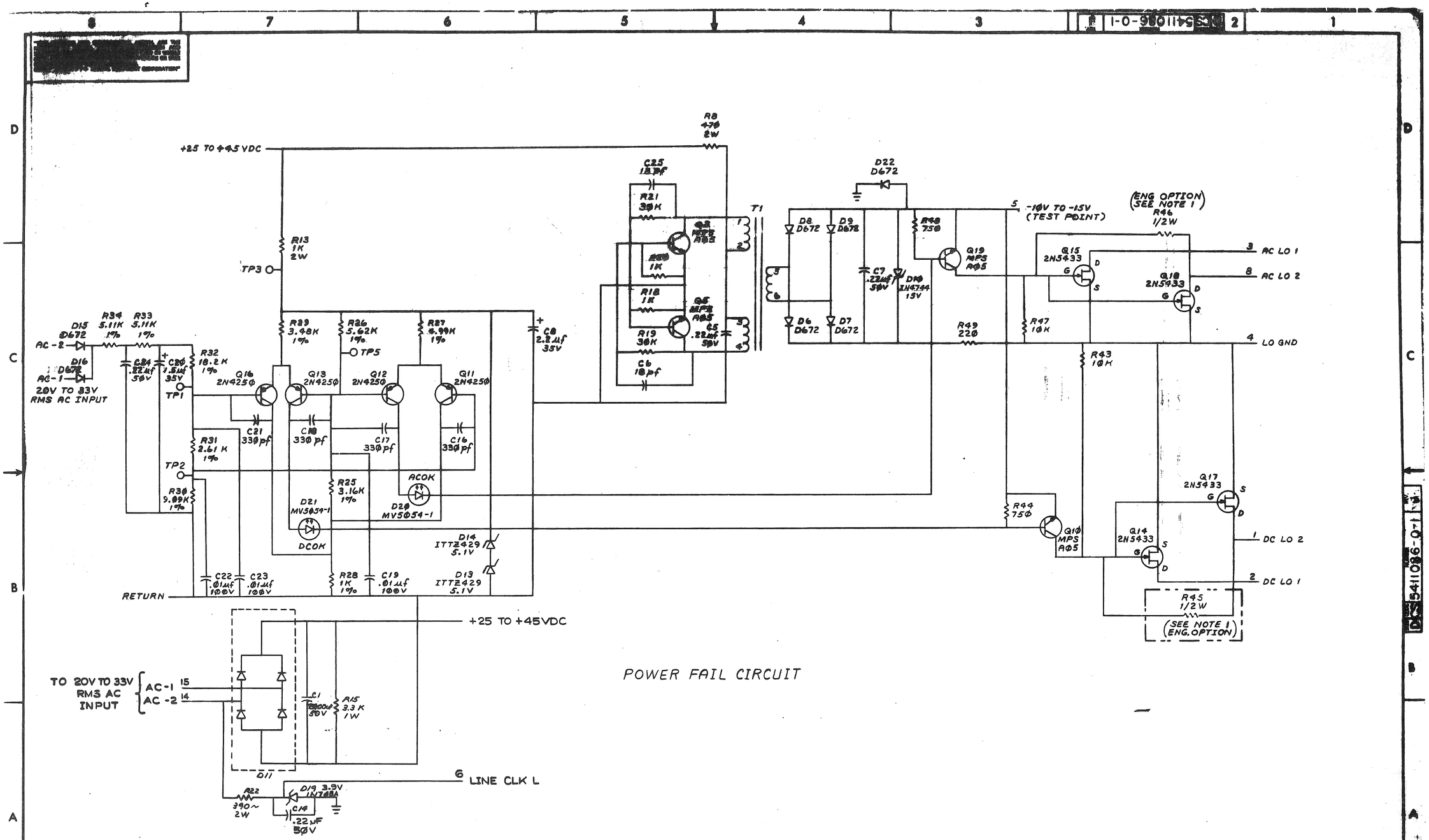
+25 TO +45 VDC
R8 470 2W
C25 18pf
R21 30K
Q3 MPS A05
R20 1K
R18 1K
Q5 MPS A05
R19 30K
C6 18pf
C5 .22uf 50V
T1
D22 D672
D8 D672
D9 D672
D6 D672
D7 D672
C7 .22uf 50V
D10 1N4744 15V
R48 750
Q19 MPS A05
-10V TO -15V (TEST POINT)
R49 220
R47 10K
R43 10K
(ENG OPTION SEE NOTE 1)
R46 1/2W
Q15 2N5433
Q18 2N5433
AC LO 1
AC LO 2
LO GND
R13 1K 2W
TP3
R29 3.48K 1%
R26 5.62K 1%
TP5
R27 8.99K 1%
C8 2.2uf 35V
D15 D672
AC-2
R34 5.11K 1%
R33 5.11K 1%
D16 D672
AC-1
20V TO 33V RMS AC INPUT
C24 .22uf 50V
C20 1.5uf 35V
R32 18.2K 1%
TP1
Q16 2N4250
Q13 2N4250
Q12 2N4250
Q11 2N4250
C21 330pf
C18 330pf
C17 330pf
C16 330pf
R31 2.61K 1%
TP2
R30 9.09K 1%
R25 3.16K 1%
ACOK
D21 MV5054-1
D20 MV5054-1
DCOK
D14 ITT2429 5.1V
D13 ITT2429 5.1V
C22 .01uf 100V
C23 .01uf 100V
R28 1K 1%
C19 .01uf 100V
RETURN
R44 750
Q10 MPS A05
Q17 2N5433
Q14 2N5433
DC LO 2
DC LO 1
R45 1/2W
(SEE NOTE 1 ENG. OPTION)
+25 TO +45VDC
TO 20V TO 33V RMS AC INPUT
AC-1 15
AC-2 14
C1 2000uf 50V
R15 3.3K 1W
D11
6 LINE CLK L
R22 390Ω 2W
D19 3.9V 1N748A
C14 .22uf 50V
POWER FAIL CIRCUIT
TITLE PWR. LINE MONITOR/15V REG.
SIZE D
CODE CS
NUMBER 5411086-0-1
SHEET 3 OF 4
SCALE
REV. 1
5411086-0-1

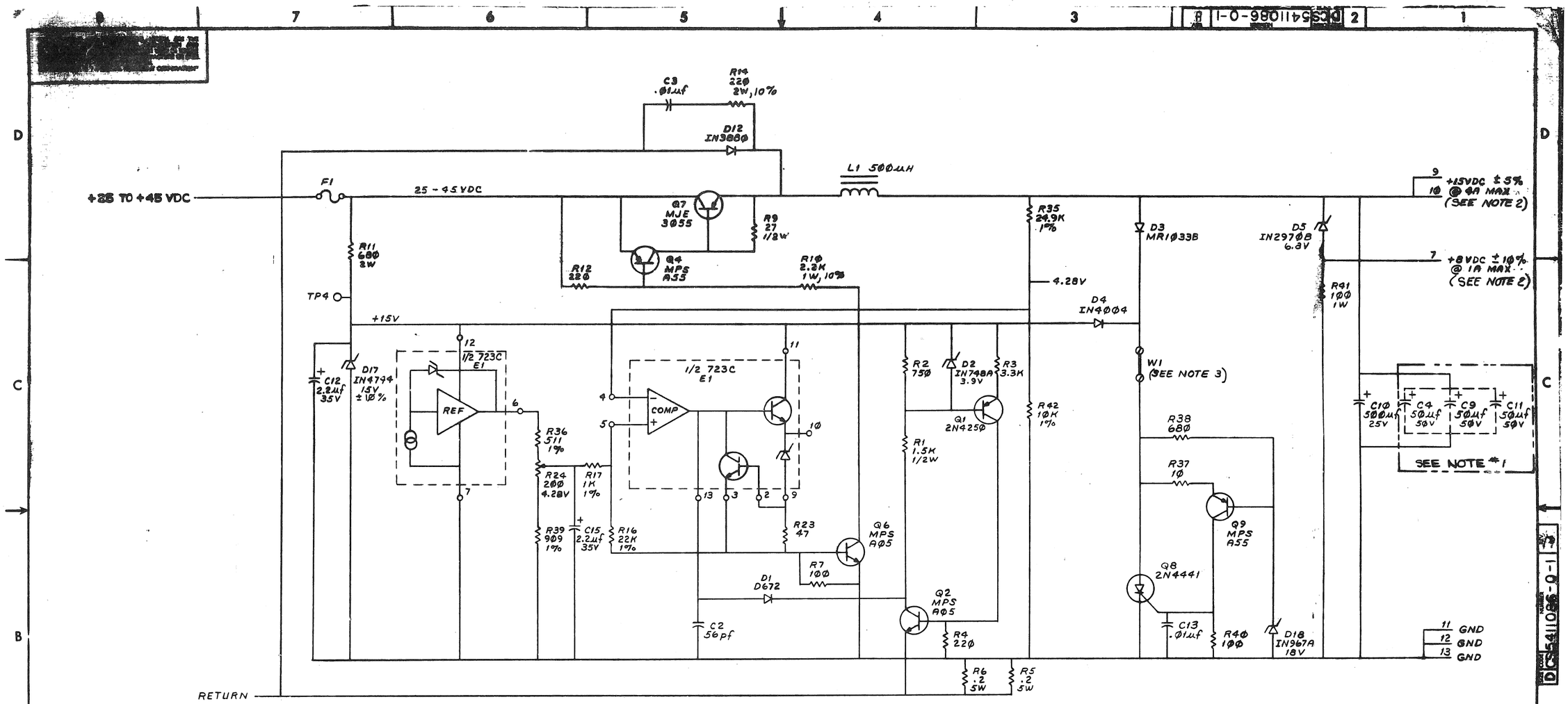

15V REGULATOR
(SEE NOTE #4)

REVISIONS		
ZONE	CHANGE NO.	REV.

TITLE	SIZE	CODE	NUMBER	REV.
PWR. LINE MONITOR/15V REG.	D		CS5411086-0-1	
SCALE —	SHEET 4 OF 4		DIST.	

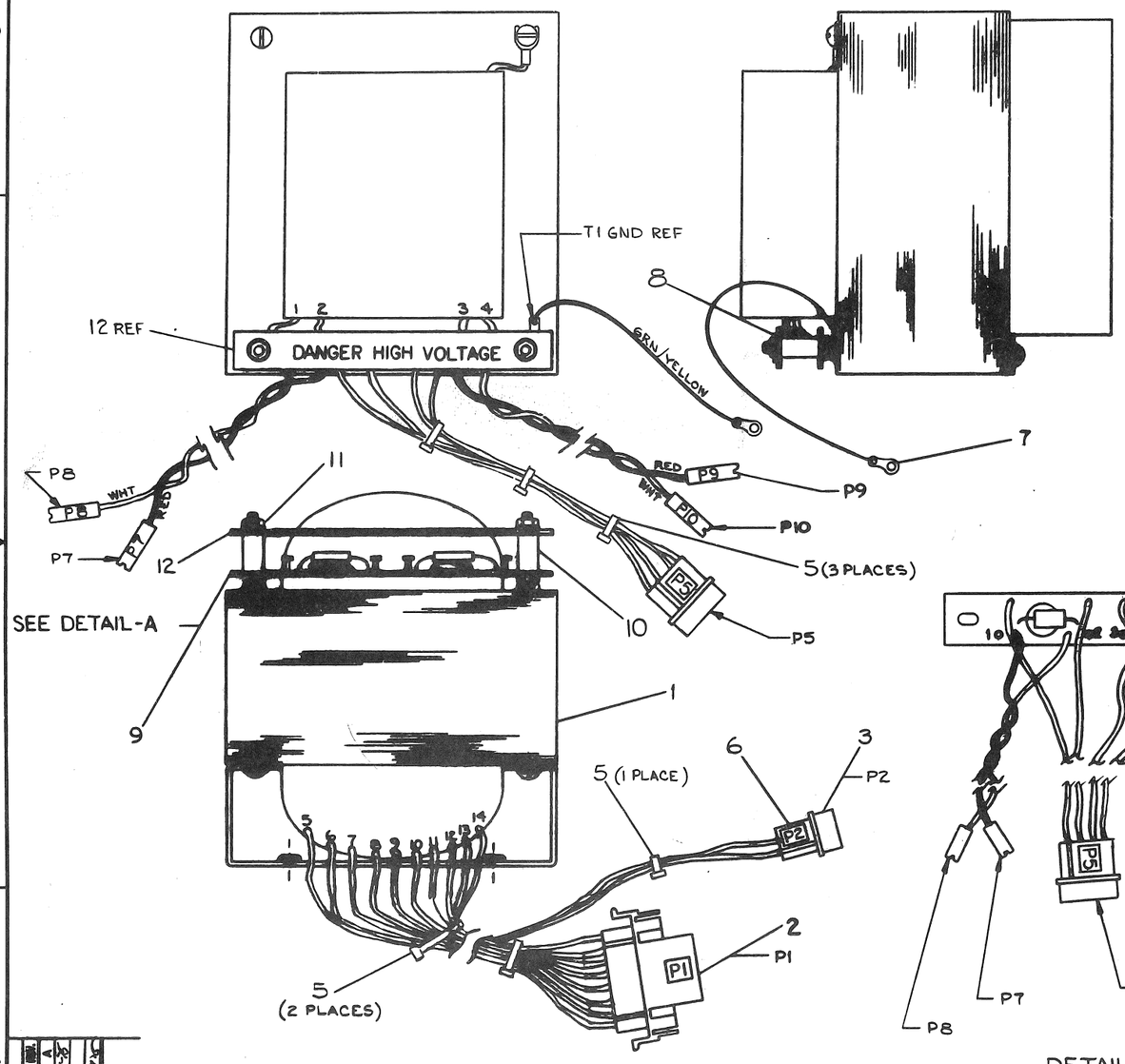

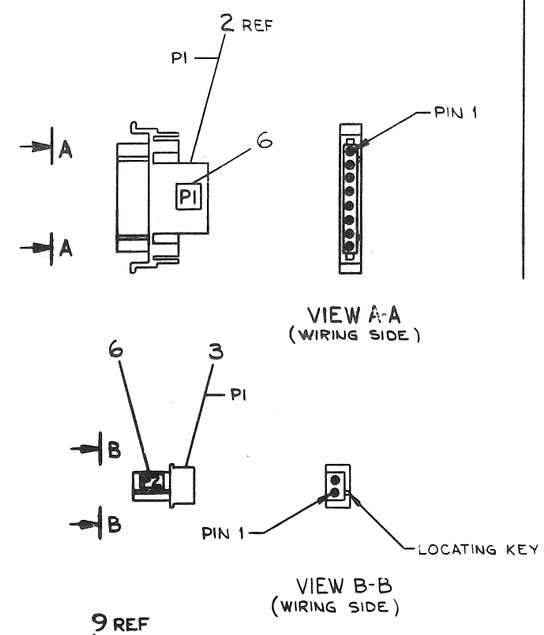

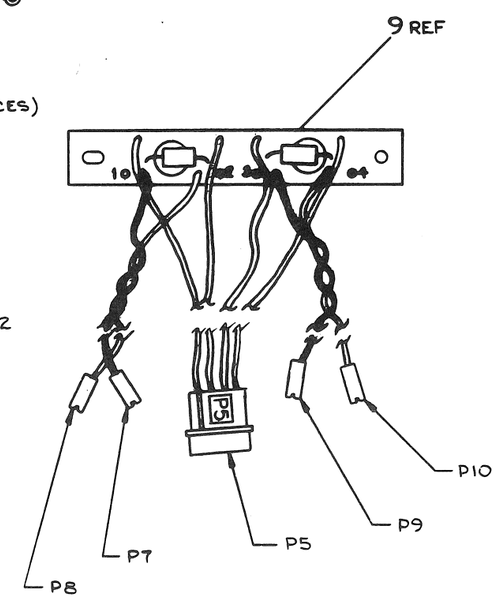

DETAIL-A
ITEM-9

REF	DESCRIPTION	SIZE/PART NO.	ITEM NO.
	TRANSFORMER ASSY PROCEDURE	A-SP-7011486-0-9	13
1	COVER	C-IA-7414301-0-0	12
2	NUT, KEP #10-32	9006565	11
2	SPACER, 3/8 ODX 1/2LG	9007831	10
1	CAP MOV BOARD ASSY	D-IA-7011751-0-0	9
2	WASHER, FLAT .437X.218ID	9006664	8
1	GROUND LUG	9008150	7
1	DECAL	A-DC-7409872-0-0	6
A/R	CABLE TIES 5 1/4 L x 1/8 W	9007883	5
10	PIN, MALE	1209378-1	4
1	CONN., 2 PIN	1213822-2	3
1	CONN., 8 PIN	1209340-01	2
1	TRANSFORMER	1612524	1

UNLESS OTHERWISE SPECIFIED DIMENSIONS ARE IN INCHES

ANGLES ±0° 30'

SURFACE QUALITY IN MICROINCHES

CLASS OF ACCURACY (CHECK ONE)

MEDIUM	±.030	±.020	±.010	±.005	±.001	±.01
PREFERRED	±.010	±.005	±.002	±.001	±.000	±0.1

QUANTITY & VARIATION

THIRD ANGLE PROJECTION

REMOVE BURRS AND BREAK SHARP CORNERS

DO NOT SCALE DWG

MATERIAL SEE PARTS LIST

FINISH

DRN. T. Quillen

CHK'D

ENG.

PROJ. ENG.

PROD.

NEXT HIGHER ASSY. D-UA-H782-0-0

SCALE 1/1

SHEET 1 OF 2

FIRST USED ON H782

TITLE TRANSFORMER ASS'Y

SIZE D CODE AD NUMBER 7011486-0-0 REV. A

DIST.

REVISIONS

REV.	DESCRIPTION	DATE	APPROVED
A	ECO 7-0001	10-15-75	

D AD 7011486-0-0 A

WIRE TABLE

ITEM NO.	DESCRIPTION AWG	DESCRIPTION COLOR	FROM CONNECTION	FROM WITH	TO CONNECTION	TO WITH	WIRE LENGTH
1	14	BLK	T1-1	—	CAP MOV BD-1	SOLDER	1.5 IN
			T1-2	—	CAP MOV BD-2	SOLDER	2.0 IN
			T1-3	—	CAP MOV BD-3	SOLDER	2.0 IN
			T1-4	—	CAP MOV BD-4	SOLDER	1.5 IN
			T1-5	—	P1-8	ITEM 4	12.0 IN
			T1-6	—	P1-7		
			T1-7	—	P1-6		
			T1-8	—	P1-5		
			T1-9	—	P1-4		
			T1-10	—	P1-3		
			T1-11	—	P1-2		
			T1-12	—	P1-1	ITEM 4	
			T1-13	—	P2-1	ITEM 4	
1	14	BLK	T1-14	—	P2-2	ITEM 4	12.0 IN
1	14	GRN/YEL	T1-GND	—	GND LUG (ITEM 7)	SOLDER	14.0 IN

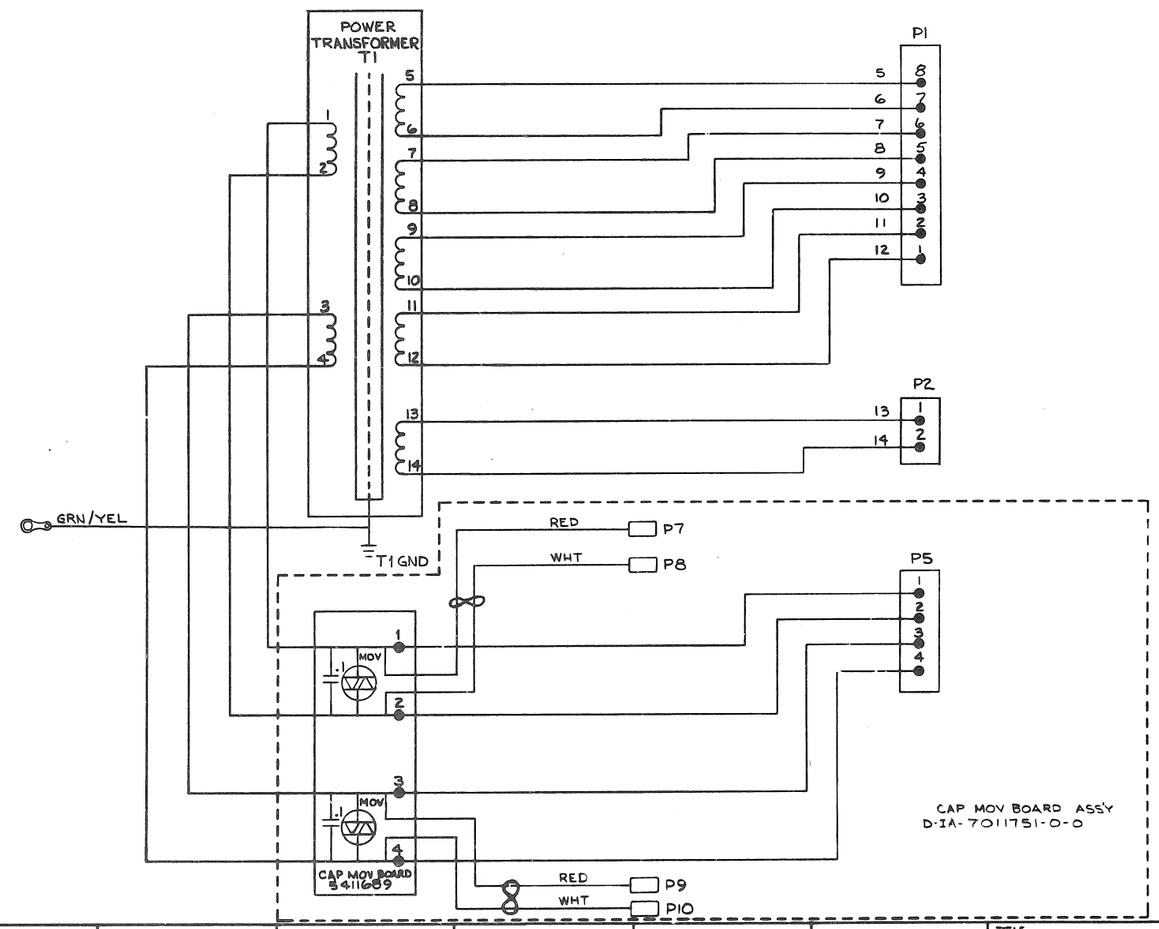

REVISIONS		
CHK	CHANGE NO.	REV.

TITLE: TRANSFORMER ASSY

SIZE D | CODE AD | NUMBER 7011486-0-0 | REV. A

SCALE — | SHEET 2 OF 2 | DIST.

DEC FORM NO. DRD 1 ??

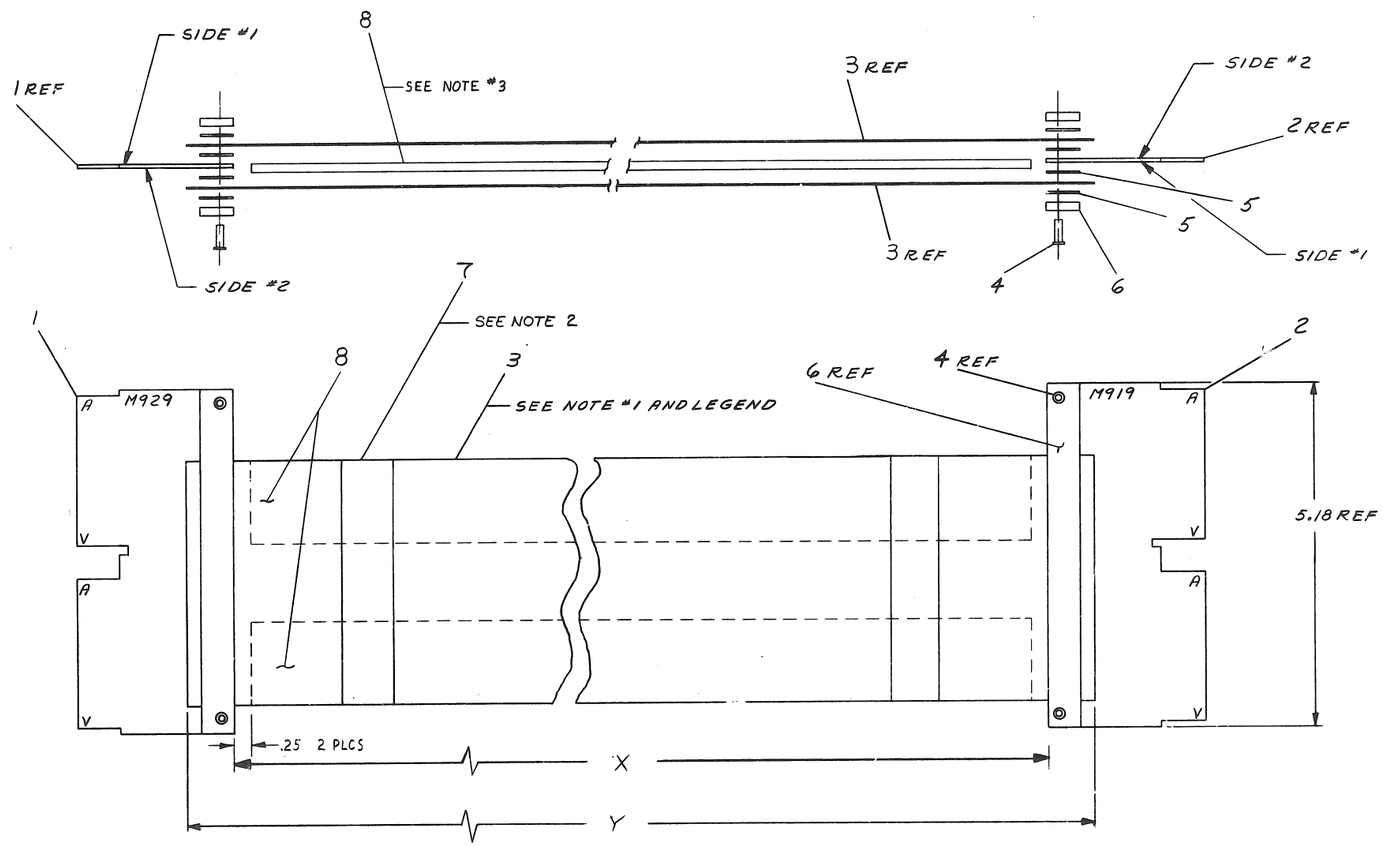

NOTES:

1. VARIATIONS AND LENGTHS SHOWN IN LEGEND ARE STANDARD. OTHER THAN STANDARD VARIATIONS WILL BE SPECIFIED BY ALPHANUMERIC DESIGNATION. FOR LENGTHS OTHER THAN FOOT INCREMENTS FROM ONE (1) FOOT THRU NINE (9) FEET, ELEVEN (11) INCHES.

A = 1"	G = 7"
B = 2"	H = 8"
C = 3"	J = 9"
D = 4"	K = 10"
E = 5"	L = 11"
F = 6"	

EXAMPLE: BC11A - 3D = 3'4".
LENGTHS WILL BE IN FOOT INCREMENTS FROM TEN (10) FEET ON, AND WILL BE SPECIFIED BY THE CORRESPONDING NUMERICAL DESIGNATION.
EXAMPLE: BC11A -11 = 11 FEET.
THE TOLERANCE ON DIMENSION "A" WILL BE 2% OF THE FOOT INCREMENT.

2. FLEXPRINTS TO BE BOUND TOGETHER BY WRAPPING WITH BLACK ELECTRICAL TAPE (ITEM 7) EVERY 18 INCHES.

3. INSTALL 2 PIECES OF FOAM TAPE (ITEM 8) BETWEEN FLEX PRINT CABLES AS SHOWN.

QTY.	DESCRIPTION	PART NO.	ITEM NO.
A/R	GRAY FOAM	9008881	8
A/R	BLK ELECTRICAL TAPE	9009260	7
4	CLAMP, CABLE	C-SC-120176-00	6
A/R	TAPE #4032 1/2W X 3 11/16L	9007834	5
4	EYELET GS-4-11 STIMSON	9006750	4
2	CABLE, "FLEXPRINT"	1700002-01	3
1	EXT. BUS CONN	A-PL-M919-0-0	2
1	BUS CONN	A-PL-M929-0-0	1

PARTS LIST

REV.	CHANGE NO.	CHK	
A	BCIIA-00001		BLASI 5-8-70
B	BCIIA-00002		BLASI 5-15-71
C	BCIIA-00003		BLASI 8-3-72
D	BCIIA-00004		BLASI 8-8-72
E	BCIIA-00005		D. POTTER 6-12-73 9-18-74
F	BCIIA-00006		D. POTTER 9-25-74 C.R. BLASI 11-7-75

FIRST USED ON OPTION/MODEL: PDP11

DO NOT SCALE DRAWING
UNLESS OTHERWISE SPECIFIED
DIMENSION IN INCHES
TOLERANCES
DECIMALS ± .005 FRACTIONS ± 1/64 ANGLES ± 0°30'
FINAL SURFACE QUALITY
REMOVE BURRS AND BREAK SHARP CORNERS
MATERIAL
FINISH

		DATE
DRN.		11-11-69
CHKD.		11/17/69
ENG.		11/18/69
PROJ. ENG.		11/18/69
PROD.		11/18/69

NEXT HIGHER ASSY: D-UA-11/20-00
SCALE 1/1
SHEET 1 OF 2

digital EQUIPMENT CORPORATION MAYNARD, MASSACHUSETTS

TITLE: CABLE ASSY (BCIIA)

SIZE/CODE D UA NUMBER BCIIA-0-0 REV. F
DIST. G

SIZE/CODE D UA NUMBER BCIIA-0-0 REV. F

LEGEND

NUMBER	DIM "X" VARIATION	DIM "Y" (PRECUT) REF.
BC11A-Ø2	2'Ø" ± 0.5"	2'1.5"
BC11A-Ø3	3'Ø" ± 1.Ø"	3'1.5"
BC11A-Ø4	4'Ø" ± 1.Ø"	4'1.5"
BC11A-Ø5	5'Ø" ± 1.Ø"	5'1.5"
BC11A-Ø6	6'Ø" ± 1.Ø"	6'1.5"
BC11A-Ø7	7'Ø" ± 2.Ø"	7'1.5"
BC11A-Ø8	8'Ø" ± 2.Ø"	8'1.5"
BC11A-Ø9	9.Ø" ± 2.Ø"	9'1.5"
BC11A-1Ø	1Ø.Ø" ± 2.Ø"	1Ø'1.5"
BC11A-11	11'Ø" ± 3.Ø"	11'1.5"
BC11A-12	12'Ø" ± 3.Ø"	12'1.5"
BC11A-13	13'Ø" ± 3.Ø"	13'1.5"
BC11A-14	14'Ø" ± 3.Ø"	14'1.5"
BC11A-15	15'Ø" ± 4.Ø"	15'1.5"
BC11A-16	16'Ø" ± 4.Ø"	16'1.5"
BC11A-17	17'Ø" ± 4.Ø"	17'1.5"
BC11A-18	18'Ø" ± 4.Ø"	18'1.5"
BC11A-19	19'Ø" ± 5.Ø"	19'1.5"
BC11A-2Ø	2Ø'Ø" ± 5.Ø"	2Ø'1.5"
BC11A-21	21'Ø" ± 5.Ø"	21'1.5"
BC11A-22	22'Ø" ± 5.Ø"	22'1.5"
BC11A-23	23'Ø" ± 6.Ø"	23'1.5"
BC11A-24	24'Ø" ± 6.Ø"	24'1.5"
BC11A-25	25'Ø" ± 6.Ø"	25'1.5"
BC11A-ØF	Ø'6" ± 0.5"	0'7.5"
BC11A-8F	8'6" ± 2.Ø"	8'7.5"

REVISIONS		
CHK	CHANGE NO.	REV.

TITLE	SIZE	CODE	NUMBER	REV.
CABLE ASSY (BC11A)	D	UA	BC11A-Ø-Ø	F
SCALE —/—/—	SHEET 2 OF 2	DIST.		

SIZE D CODE UA NUMBER BC11A-Ø-Ø REV F

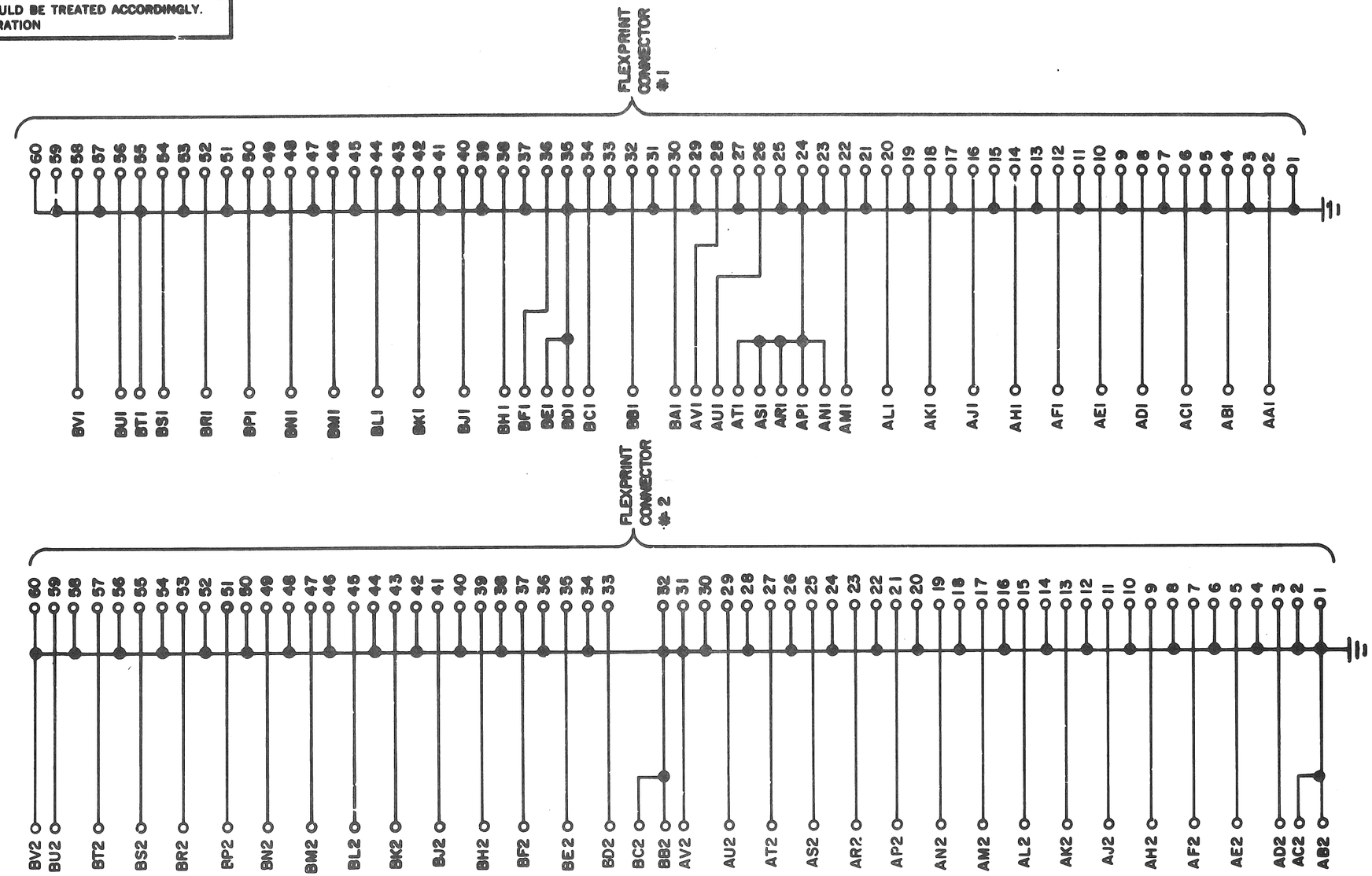

REVISIONS		
CHK	CHG NO.	REV.
	60001	A

DRN.	BUTLER	DATE	10/7/69
CHK'D	G. Hourigan	DATE	10-20-69
ENG.	[illegible]	DATE	11-7-69
PROD.		DATE	

TRANSISTOR & DIODE CONVERSION CHART

DEC	EIA	DEC	EIA

[redacted]
EQUIPMENT CORPORATION
MAYNARD, MASSACHUSETTS

TITLE
BUS CONNECTOR M919

SIZE	CODE	NUMBER	REV.
B	CS	M919-0-1	A

PRINTED CIRCUIT REV. B

DEC FORM NO.
DRB 102

5

DIST. 324, 434, 435 3

PINK

SIZE B | CODE CS | NUMBER M919-0-1 | REV. A

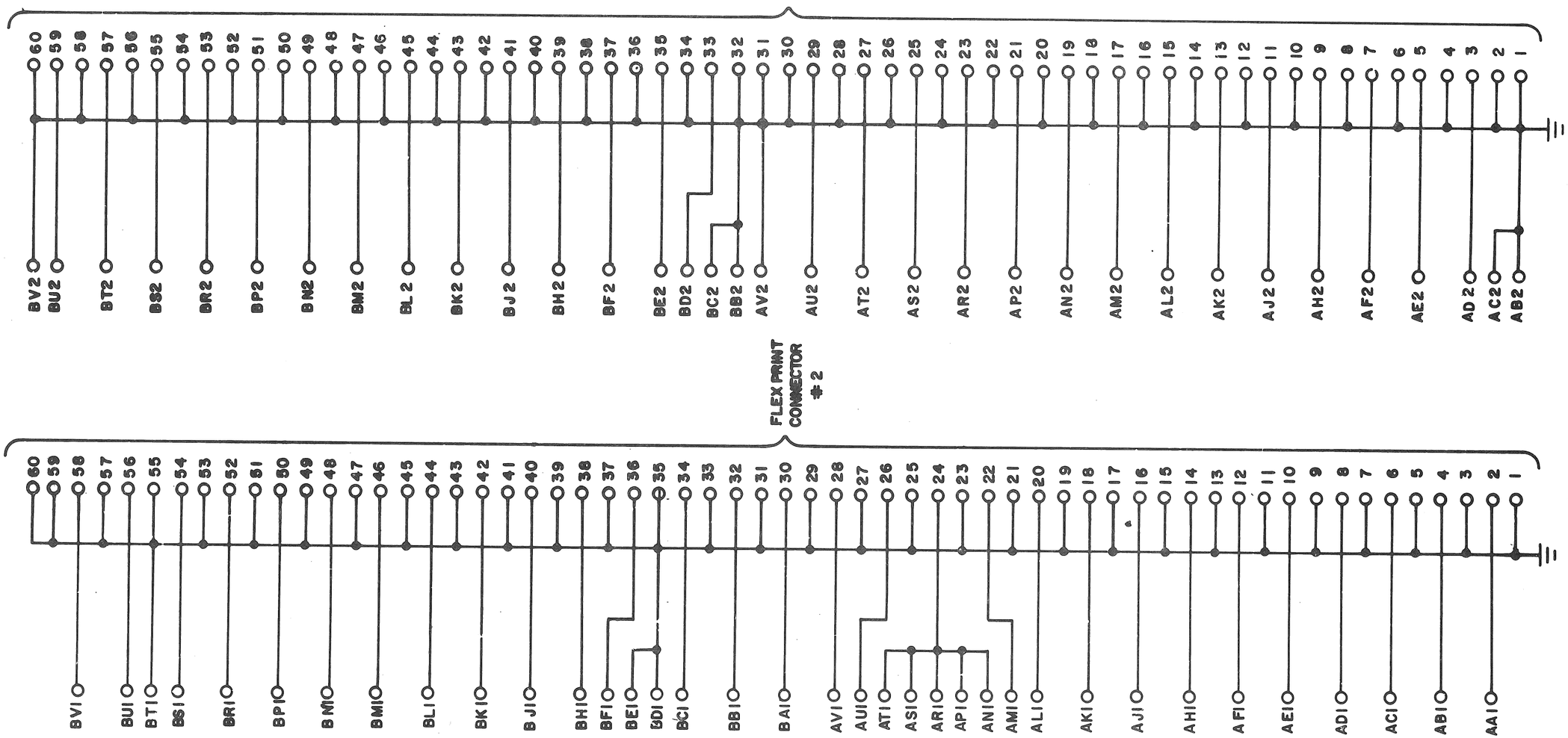

SIZE	CODE	NUMBER	REV.
B	CS	M929-0-1	

REVISIONS		
CHK	CHG NO.	REV.

DRN.	G Glennon	DATE	10-12-69
CHK'D	G. Young	DATE	10-20-69
ENG.	E Blair	DATE	11/8/69
PROD.		DATE	

TRANSISTOR & DIODE CONVERSION CHART

DEC	EIA	DEC	EIA

[redacted]
EQUIPMENT CORPORATION
MAYNARD, MASSACHUSETTS

TITLE
BUS CONNECTOR M929

SIZE	CODE	NUMBER	REV.
B	CS	M929-0-1	

PRINTED CIRCUIT REV. B

DEC FORM NO.
DRB 102

DIST. 324, 434, 435-3

5

PINK

LEGEND		
NUMBER	DIM "X"	USED ON
7011413-3F	3FT 6IN ± 1IN	BA11-L OR K
7011413-7	7FT ± 2 IN	H9280

NOTES:

1. AFTER STRIPING OUTSIDE COVERING (1-1/4 IN.) FOLD BACK THE GROUND WIRE. (BARE ONE) AND REMOVE THE WRAPPER
2. COVER THE FOLDED BACK BARE WIRE. WITH ITEM #2 AND SHRINK (ON BOTH ENDS).
3. ADD ITEM #4 (CLEAR TUBING) OVER ITEM #1 (SHIELD) ON ONE END.
4. STAKE ITEM #3 (5 PLACES) ONTO ITEM #1

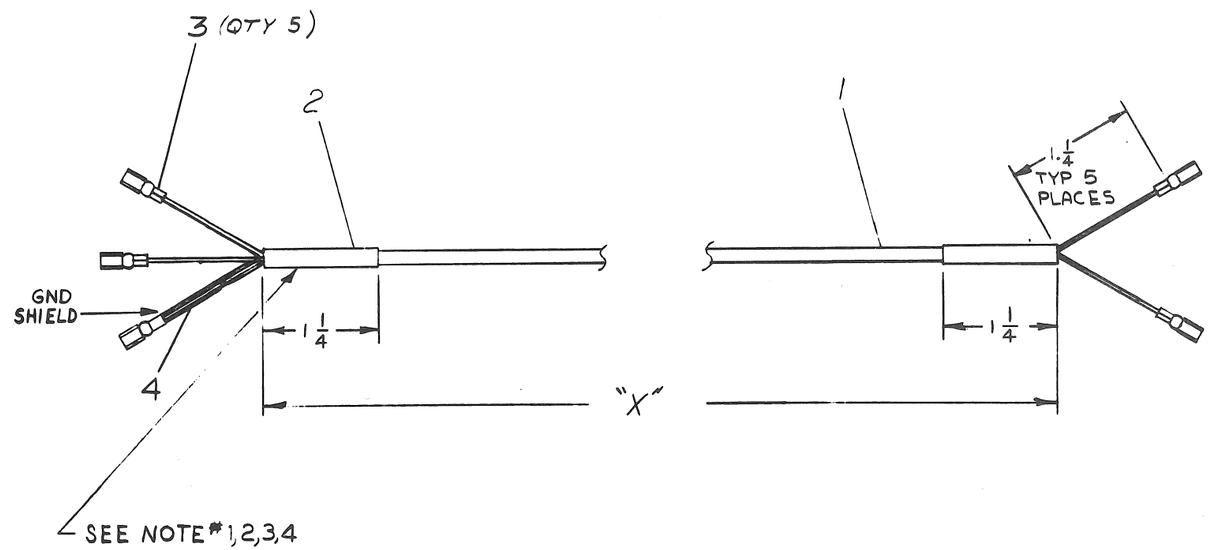

QTY.	DESCRIPTION	PART NO.	ITEM NO.
A/R	CLEAR TUBING	9107278-11	4
5	TERMINAL LUG FAST-ON (.RED)	9007917-00	3
A/R	TUBING SHRINK WHT 3/32	91-07264-09	2
A/R	WIRE SHIELDED #22 AWG	91-07703	1

PARTS LIST

REVISIONS			
CHK	CHANGE NO.	REV.	
	7011413-00001	A	R. BARRY 8-28-75
	7011413-00002	B	R. BARRY 9-2-75
	7011413-00003	C	R. BARRY 11-25-75
			R. BARRY 16 AUG 76

FIRST USED ON OPTION/MODEL: SEE LEGEND

DIMENSIONAL TOLERANCE

DIMENSIONS ARE ~~MILLIMETERS~~ INCHES UNLESS OTHERWISE SPECIFIED

MILLIMETERS	INCHES	ANGLES
X,XX = ±0,10 X,X = ±0,5 X = ±2,	.XXX = ±.005 .XX = ±.02 .X = ±.1	±0° 30'

THIRD ANGLE PROJECTION

REMOVE BURRS AND BREAK SHARP CORNERS SURFACE QUALITY ✓

MATERIAL: SEE PARTS LIST

FINISH: —

		DATE
DRN.	J. Phelan	6/11/75
CHK'D	G. Hood	6/18/75
ENG.	R. Barry	6/16/75
PROJ. ENG.	R. Barry	6/16/75
PROD.	R. Peterson	6/16/75

NEXT HIGHER ASSY.: —

SCALE: NONE

SHEET 1 OF 1

digital

TITLE: CABLE, EXTERNAL BOOT, M9301

SIZE	CODE	NUMBER	REV.
C	IA	7011413-0-0	C

DIST.

DEC FORM NO. DRC 100-B

C IA 7011413-0-0 REV. C

LEGEND

NUMBER	DIM "X" VARIATION	USED ON	KEY PIN
7011411-ØJ	8 IN ± .5 IN	BA11-L OR K	10 ONE END
7011411-ØK	9 IN ± .5 IN	LSI-11	4 BOTH ENDS
7011411-1D	1 FT-4 IN ± 1 IN	KY11-LB	
7011411-2D	2 FT-4 IN ± 1 IN	BA11-F/DD11PF	10 ONE END
7011411-ØH	7 IN ± .5 IN	H790, 1, 2, 3	

NOTES:

1. INSERT KEY IN PROPER CONNECTOR PIN AND BREAK OFF TAB.
2. USE CRIMP PRESS 3M# 3440 OR 3445 AND LOCATOR GUIDE PLATE 3M# 3443-9 TO CRIMP ITEM #2.

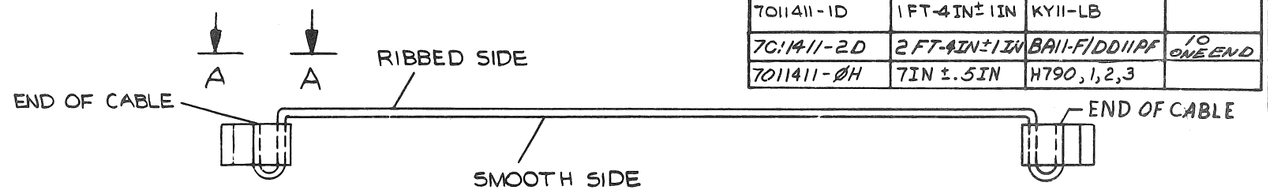

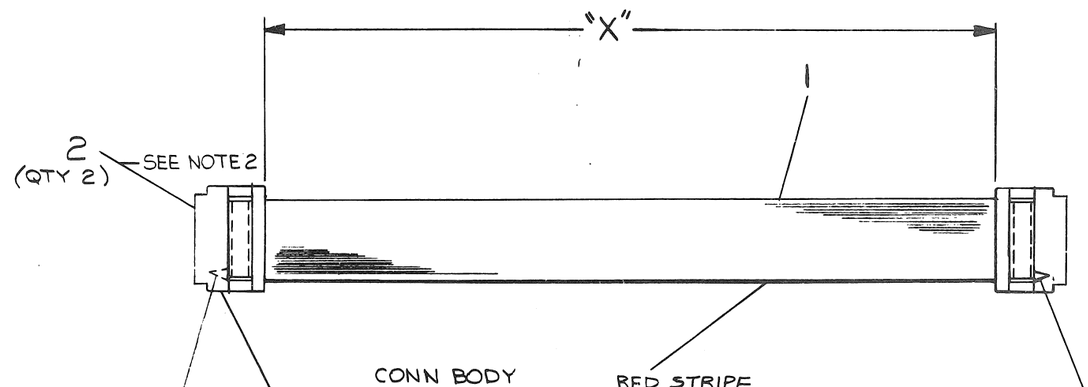

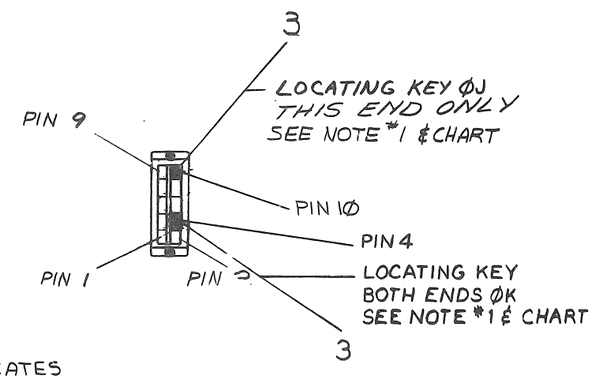

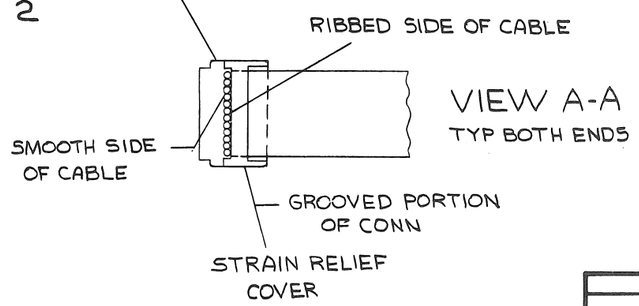

QTY.	DESCRIPTION	PART NO.	ITEM
A/R	KEY	9009707	3
2	CONN. CRIMP	1211206-02	2
A/R	CABLE 10 CONDUCT	9107747-02	1

PARTS LIST

REVISIONS			
CHK	CHANGE NO.		REV.
	7011411-00001		A
	7011411-00002		B
	7011411-00003		C

FIRST USED ON OPTION/MODEL: SEE LEGEND

DIMENSIONAL TOLERANCE: DIMENSIONS ARE ~~MILLIMETERS~~ INCHES UNLESS OTHERWISE SPECIFIED

MILLIMETERS	INCHES	ANGLES
X,XX = ±0,10	.XXX = ±.005	±0° 30'
X,X = ±0,5	.XX = ±.02	
X = ±2,	.X = ±.1	

THIRD ANGLE PROJECTION

REMOVE BURRS AND BREAK SHARP CORNERS SURFACE QUALITY ✓

MATERIAL: SEE PARTS LIST

FINISH: —//—

DRN. M. Boyko	DATE 5/20/75	
CHK'D D. Hoag	DATE 6/13/75	
ENG. R. Barry	DATE 6/18/75	
PROJ. ENG. R. Barry	DATE 6/18/75	
PROD. R.K. Peters	DATE 6/19/75	

NEXT HIGHER ASSY.: —//—

SCALE: NONE

SHEET 1 OF 1

TITLE: CABLE, CONSOLE/BACKPLANE

SIZE	CODE	NUMBER	REV.
C	IA	7011411-0-0	C

DIST.

DEC FORM NO. DRC 100-8

WIRE TABLE

ITEM NO	DESCRIPTION AWG	DESCRIPTION COLOR	FROM POINT	FROM CONNECTION	FROM WITH	TO POINT	TO CONNECTION	TO WITH	SIGNAL
5	18 TWP	BLU BLK	2	P1-1	2	7	—	4	
			1	P1-3	2	8	—	4	
6	18 TWP	RED BLK	3	—	4	6	—	4	+5
			4	—	4	5	—	4	GND

NOTES:

1. APPLY TIE WRAP (ITEM #5) EVERY 4 IN.

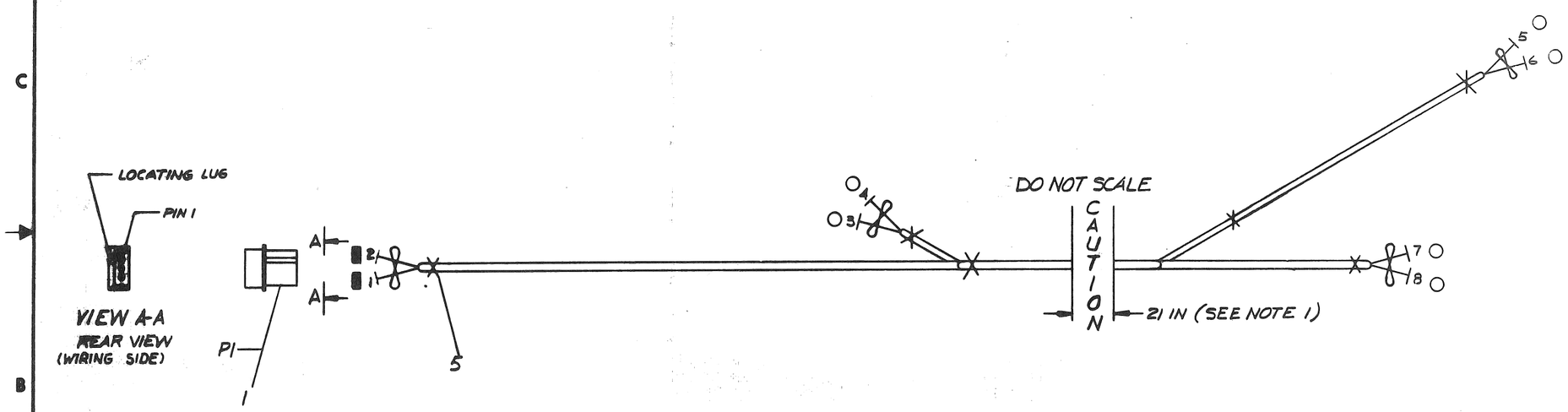

DO NOT REDUCE
SCALE
0 IN 6 IN 12 IN

	AR	WIRE 18 AWG TWP BLK/RED	9107430-02	6
	AR	WIRE 18 AWG TWP BLK/BLU	9107430-06	5
○	4	CONN SOLDERLESS (RED)	9007917	4
X	12	TIE WRAP 1 M	9007031	3
■	2	PIN MALE	1209378-01	2
	1	HOUSING, 3 PIN	12 09351-03	1
SYMBOL		DESCRIPTION	DWG./PART NO.	ITEM NO.

UNLESS OTHERWISE SPECIFIED DIMENSIONS ARE IN INCHES

SURFACE QUALITY IN MICROINCHES	CLASS OF ACCURACY (CHECK ONE)	0 TO 12	12 TO 24	24 TO 48	48 TO 96	96 TO 192	192 TO 384	384 TO 768
	MEDIUM	±.004	±.006	±.012	±.016	±.024	±.04	
	PREFERRED	±.012	±.016	±.025	±.04	±.060	±0.1	

QUANTITY & VARIATION

THIRD ANGLE PROJECTION

REMOVE BURRS AND BREAK SHARP CORNERS

DO NOT SCALE DWG

MATERIAL SEE PARTS LIST

FINISH —

DRN.		10/24/75
CHK'D		11/3/75
ENG.	R. Barry	NOV 3 75
PROJ. ENG.	R.B.	NOV 3 75
PROD.		NOV 3 75

NEXT HIGHER ASSY. E-UA-1134-0-0

SCALE —

SHEET 1 OF 1

FIRST USED ON 1134

TITLE PDP1104/1134 CONSOLE POWER HARNESS

SIZE	CODE	NUMBER	REV.
D	IA	7011992-0-0	

DIST.

D IA 7011992-0-0

DIGITAL EQUIPMENT CORPORATION
MAYNARD, MASSACHUSETTS

PARTS LIST

MADE BY D. Healy DATE 12 May 76	CHECKED D. Healy DATE 12 May 76	SECTION 1
ENG Richard Barry DATE MAY 17, 1976	PROD R.B. King DATE MAY 17, 1976	ISSUED SECT. 1

ITEM NO.	DWG NO./PART NO.	DESCRIPTION	DD,DC,LC,LD	HC,HD,MC,MD
	EK-11Ø34-OP-PRE	USERS MANUAL	1	1
	ZJØ1Ø-RB	SOFTWARE LIB KIT (PAPER TAPE KIT)	1	1
	MPØØØ44	PRINT SET 11/34 VOL.1	1	1
	EK-KD11E-TM-PRE	KD11-E TECHNICAL MANUAL *	1	1
	EK-MS11E-MM-ØØ1	MS11-E-J MAINTENANCE MANUAL *	1	-
	EK-MM11D-TM-PRE	MM11-D,DP TECHNICAL MANUAL *	-	1
	EK-BA11L-MM-PRE	BA11-L MAINTENANCE MANUAL *	1	1
	EK-M785Ø-MM-PRE	M785Ø MAINTENANCE MANUAL *	1	1
	EK-DL11W-MM-PRE	DL11-W MAINTENANCE MANUAL *	-	-
	EK-M93Ø1-MM-PRE	M93Ø1 MAINTENANCE MANUAL *	1	1
	7008360-1	CABLE ASSY (20 MA) (DL11-WA)	1	1
	BCØ5C-25	CABLE MODEM (EIA) (DL11-WB)	-	-
		* Do not ship to OEM customers.		

TITLE	ASSY NO.	SIZE	CODE	NUMBER	REV.	ECO NO.
SHIPPING LIST 11/34 (5 1/4" BA11-L)	NONE	A	PL	11/34-Ø-3		
	SHEET 1 OF 1	DIST.				

DEC FORM DEC 16 (325) 1031 N870
DRA 110

DIGITAL EQUIPMENT CORPORATION
MAYNARD, MASSACHUSETTS

PARTS LIST

MADE BY D. Healy	CHECKED D. Healy	SECTION 1
DATE 12 May 76	DATE 12 May 76	
ENG Richard Barry	PROD R.B. King	ISSUED SECT. 1
DATE MAY 17, 1976	DATE May 17, 1976	

ITEM NO.	DWG NO./PART NO.	DESCRIPTION	DH,DJ,LH,LJ	DM,DN,LM,LN	HH,HJ,MH,MJ	HM,HN,MM,MN
	EK-11/Ø34-OP-PRE	USERS MANUAL	1	1	1	1
	ZJØ1Ø-RB	SOFTWARE LIB KIT (PAPER TAPE KIT)	1	1	1	1
	MPØØØ82	PRINT SET 11/34 VOL. 2	1	1	1	1
	EK-KD11-E-TM-PRE	KD11-E TECHNICAL MANUAL *	1	1	1	1
	EK-MS11E-MM-ØØ1	MS11-E-J MAINTENANCE MANUAL *	1	1	-	-
	EK-MM11D-TM-PRE	MM11-D,DP TECHNICAL MANUAL *	-	-	1	1
	EK-BA11K-MM-ØØ2	BA11-K MAINTENANCE MANUAL *	1	1	1	1
	EK-M785Ø-MM-PRE	M785Ø MAINTENANCE MANUAL *	1	1	1	1
	EK-DL11W-MM-PRE	DL11-W MAINTENANCE MANUAL *	-	1	-	1
	EK-M93Ø1-MM-PRE	M93Ø1 MAINTENANCE MANUAL *	1	1	1	1
	7008360-1	CABLE ASSY (20 MA) DL11-WA	-	1	-	1
	BCØ5C-25	CABLE MODEM (EIA) DL11-WB	-	-	-	-
	1211825	CHASSIS TRACKS & MTG HDW.	1	1	1	1
	7010059	SHIPPING BRACKET	1	1	1	1

* Do not ship to OEM customers.

TITLE	ASSY NO.	SIZE	CODE	NUMBER	REV.	ECO NO.
SHIPPING LIST 11/34 (10 1/2" BA11-K)	NONE	A	PL	11/34-Ø-4		
	SHEET 1 OF 1	DIST.				

DEC FORM DRA 110 DEC 16-(325)-1031-N870