digital

DRII-K

Engineering Drawings

Digital Equipment Corporation

The material herein is for information purposes only and is subject to change without notice. Digital Equipment Corporation assumes no responsibility for any errors which may appear herein.

These drawings and specifications herein are the property of Digital Equipment Corporation and shall not be reproduced or copied or used in whole or in part as the basis for the manufacture or sale of items without written permission.
Copyright © 1975, Digital Equipment Corporation

digital EQUIPMENT CORPORATION MAYNARD MASSACHUSETTS

DRAWING DIRECTORY

"THIS DRAWING AND SPECIFICATIONS, HEREIN, ARE THE PROPERTY OF DIGITAL EQUIPMENT CORPORATION AND SHALL NOT BE REPRODUCED OR COPIED OR USED IN WHOLE OR IN PART AS THE BASIS FOR THE MANUFACTURE OR SALE OF ITEMS WITHOUT WRITTEN PERMISSION. COPYRIGHT © 1974 , DIGITAL EQUIPMENT CORPORATION"

CUSTOMER PRINT SET INDEX

THIS IS PRINT SET [x]

SEQUENCE		SEQUENCE
DRAWING DIRECTORY	B-DD-DR11K-Ø	
SHIPPING LIST	A-PL-DR11K-Ø-Ø	
DR11K DIGITAL I/O	D-CS-M7843-Ø-1	
I/O CABLE	C-UA-BCØ8R-Ø-Ø	
PRIORITY LEVEL JUMPER #4	C-IA-5408776-Ø-Ø	
PRIORITY LEVEL JUMPER #4	B-CS-5408776-Ø-1	
DR11-K CHECKOUT AND ACCEPTANCE PROCEDURE	A-SP-DR11K-O-2	

UNIT VARIATIONS

VAR	TITLE	PRINT SET DR11K
DR11K	DIGITAL I/O	X

REVISIONS		
DATE	CHG. NO.	REV
1-75	DR11K-00001	A

USED ON OPTION/MODEL

SHEET 1 OF 2

		DATE
DRN.	R. Iknaian	10/31/74
CHK'D.	[illegible]	12-2-74
PROJ ENG.	Russ Iknaian	11-15-74
PROD.	John Hess	12-3-74
FIELD SERV.	[illegible]	12-3-74

TITLE DR11K DIGITAL I/O

SIZE	CODE	NUMBER	REV
B	DD	DR11K-Ø	A

DIST

DEC 16-(325)-1062-1A-R972

DRB 106

ELECTRICAL

CUSTOMER PRINT SET (DR11K)	MFG. SET	FIND NO.	DRAWING NO.	REV	NO OF SHT	DESCRIPTION	OPTION NO./FILE DATE
x		1	B-DD-DR11K-Ø	#	2	DRAWING DIRECTORY	
x			C-UA-BC08R-Ø-Ø	#	1	I/O CABLE	
x			A-PL-DR11K-Ø-Ø	#	1	SHIPPING LIST	
			A-SP-DR11K-Ø-1	#	32	DR11-K SPECIFICATION	
X			A-SP-DR11K-Ø-2	#	5	DR11-K CHECKOUT AND ACCEPTANCE PROCEDURE	
x		2	D-CS-M7843-Ø-1	#	8	DR11-K DIGITAL I/O	
			K-CO-M7843-Ø-4	#	1	X-Y COORDINATE HOLE LOCATION	
			D-AH-M7843-Ø-5	#	1	ASSY/DRILLING HOLE LAYOUT	
			B-MH-M7843-Ø-6	#	1	MODULE ECO HISTORY	
x		3	C-IA-5408776-0-0	#	1	PRIORITY LEVEL JUMPER #4	
x			B-CS-5408776-0-1	#	1	PRIORITY LEVEL JUMPER #4	
			K-CO-5408776-0-4	#	1	X-Y COORDINATE HOLE LOCATION	
			B-MH-5408776-0-6	#	1	MODULE ECO HISTORY	
		4	C-AH-5408776-0-5	#	1	ASSY/DRILLING HOLE LAYOUT	

CUSTOMER PRINT SET	MFG SET	FIND NO.	DRAWING NO.	REV	NO OF SHT	DESCRIPTION	OPTION NO./FILE DATE

CUSTOMER PRINT SET CODES
X = PRINT OF DOCUMENT INCLUDED IN PRINT SET
C = INCLUDES ALL PRINTS INDICATED ON DOCUMENT
S = CONFIDENTIAL AUTHORIZED SIGNATURE REQUIRED

TITLE	SHEET	SIZE	CODE	NUMBER	REV
DR11K DIGITAL I/O	2 OF 2	B	DD	DR11K-Ø	A

DRB 108

DEC 16-(325)-1062-2B-R972

DIGITAL EQUIPMENT CORPORATION
MAYNARD, MASSACHUSETTS

PARTS LIST

MADE BY	Russ Iknaian	CHECKED	Dave Crabbe	SECTION	
DATE	10/29/74	DATE	10/31/74		
ENG	Russ Iknaian	PROD	John Hess	ISSUED SECT.	
DATE	11/1/74	DATE	11/1/74		

ITEM NO.	DWG NO./PART NO.	DESCRIPTION	QUANTITY/VARIATION DR11K
1.	B-DD-DR11K-Ø	CUSTOMER PRINT SET	1
2.	M7843	DIGITAL I/O MODULE	1
3.	BC08R-Ø1	CABLE, ONE FOOT	1
4.	MAINDEC-11-DZDRG-D	DIGITAL I/O TEST, DOCUMENT	1
5.	MAINDEC-11-DZDRG-PB	DIGITAL I/O PAPER TAPE BINARY	1
6.	DEC-11-HDRKA-D	DIGITAL I/O USER MANUAL	1
7.	5408776	PRIORITY JUMPER LEVEL #4	1

TITLE	ASSY NO.	SIZE	CODE	NUMBER	REV.	ECO NO.
SHIPPING LIST	B-DD-DR11K-Ø	A	PL	DR11K-Ø-Ø		
	SHEET 1 OF 1	DIST.				

DEC FORM DEC 16 (325)-1031 N870
DRA 110

"THIS DRAWING AND SPECIFICATIONS, HEREIN, ARE THE PROPERTY OF DIGITAL EQUIPMENT CORPORATION AND SHALL NOT BE REPRODUCED OR COPIED OR USED IN WHOLE OR IN PART AS THE BASIS FOR THE MANUFACTURE OR SALE OF ITEMS WITHOUT WRITTEN PERMISSION. COPYRIGHT © 1974 DIGITAL EQUIPMENT CORPORATION"

NOTES:

1. VECTOR ADDRESS — PLACE SWITCH ON FOR LOGICAL ONE.
2. DEVICE ADDRESS — PLACE SWITCH OFF FOR LOGICAL ONE.
3. ANY SIGNAL NOT PRODUCED ON THE RESPECTIVE PRINT IS REFERENCED TO THE SOURCED PRINT BY THE PREFIX D1 THRU D8.
4. R118, R120 & R121 ARE CUSTOMER OPTIONS, DO NOT INSERT.
5. R119 IS AN ENGINEERING OPTION, DO NOT INSERT
6. VARIATIONS -00 & 01 MAY BE SUBSTITUTED IF THE-02 IS NOT AVAILABLE SEE ITEM 44

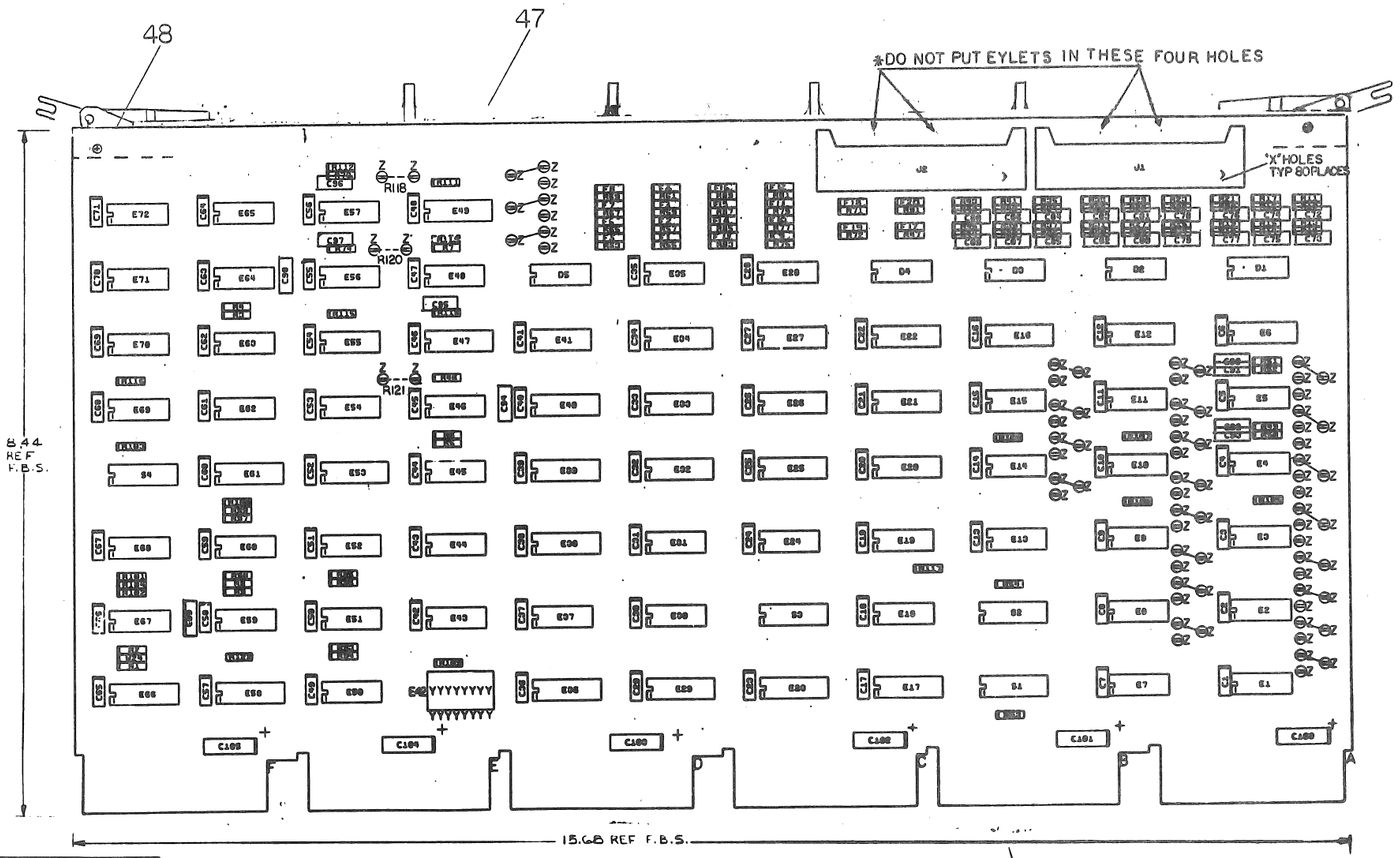

QTY	REF DESIGNATION	DESCRIPTION	PART NO.	ITEM NO.
		X-Y COORDINATE HOLE LOCATION	K-CO-M7843-0-4	1
REF		ASSY/DRILLING HOLE LAYOUT	D-AH-M7843-0-5	2
REF		MODULE ECO HISTORY	B-MH-M7843-0-6	3
1		ETCHED CIRCUIT BOARD	5011099	4
9	C90 THRU C98	CAP 330PF 100V 5%	1000023	5
1	C99	CAP 470PF 100V 5%	1000024	6
10	C72 THRU C89	CAP 820PF 100V 5%	1000027	7
71	C1 THRU C71	CAP .01uf 100V 20% DISC	1001610-01	8
6	C100 THRU C105	CAP 6.8uf 35V 10%	1005306	9
1	E42	IC SOCKET 16 PINS	1209836	10
2	J1,J2	40 PIN BERG CONN	1209941-02	11
4	S1 THRU S4	SWITCH PACK (~~16 PIN~~) 8 POSITION	1211164-04	12
~~4~~		~~SWITCH PACK COVER~~	~~1211336-04~~	13
18	R11,R13,R15,R17,R19,R21,R23 R25,R27,R31,R33,R35,R37,R39 R41,R43,R45,R29.	RES 47 1/4W 1% FUSIBLE	1310881-02	14
2	R4,R6	RES 47 1/4W 5%	1300202	15
2	R109,R118	RES 4.7K 1/4W 5%	1300447	16
5	R8,R49 THRU R52	RES 100 1/4W 5%	1300229	17
2	R7,R122	RES 180 1/4W 5%	1301322	18
2	R53,R54	RES 330 1/4W 5%	1300295	19
1	R2	RES 390 1/4W 5%	1300309	20
20	R47,R55,R57,R59,R61,R63,R65 R67,R69,R71,R72,R75,R77,R79 R81,R83,R85,R87,R89,R91	RES 470 1/4W 5%	1300316	21
12	R1,R3,R5,R6,R105,R106,R107 R108,R111,R112,R115,R117	RES 1K 1/4W 5%	1300365	22
18	R10,R12,R14,R16,R18,R20,R22 R24,R26,R28,R30,R32,R34,R36 R38,R40,R42,R44	RES 3.3K 1/4W 5%	1300439	23
15	R46,R73,R74,R93 THRU R104	RES 10K 1/4W 5%	1300479	24
1	R110	RES 270 1/4W 5%	1301972	25
4	E45,E52,E65,E72	IC DEC 7400	1905575	26
3	E37,E63,E44	IC DEC 7402	1909004	27
3	E5,E54,E62	IC DEC 7404	1909686	28
3	E1,E7,E13	IC DEC 7405	1909930	29
2	E40,E64	IC DEC 7408	1910155	30
14	E2,E3,E6,E9,E10,E11,E14,E15 E19,E31,E55,E56,E70,E71	IC DEC 7474	1905547	31
1	E4	IC DEC 7486	1910011	32
2	E47,E49	IC DEC 74123	1910436	33
4	E21,E26,E33,E39	IC DEC 74157	1910655	34
2	E53,E61	IC DEC 74155	1910656	35
4	E22,E27,E34,E40	IC DEC 74175	1910651	36
3	E51,E60,E68	IC DEC 8242	1909712	37
4	E28,E35,E41,E48	IC DEC 7416	1909928	38
4	E20,E25,E32,E38	IC DEC 8266	1909934	39
5	E8,E12,E16,E58,E66	IC DEC 8837	1911116	40
4	E17,E23,E29,E36	IC DEC 8838	1911117	41
8	E18,E24,E30,E57,E59,E69	IC DEC 8881	1909705	42
3	E50,E67,E43	IC DEC 8640	1911469	43
5	D1 THRU D5 (SEE NOTE 6)	DIODE ARRAY DEC 2501-02	1910010-02	44
79		SPLIT LUGS	9000735	45
24	W1A THRU W23A,W24	JUMPER, # 22 AWG (INSULATED)	9009105	46
1		HANDLE (HEX)	1210711-02	47
8		EYELET (HANDLE)	9006732	48

SEE(AN)*

FIRST USED ON OPTION MODEL

PARTS LIST

ETCH BOARD REV C

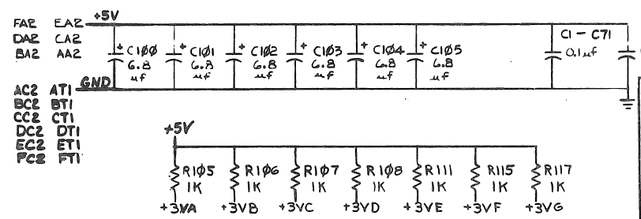

DEC 74123	8	16
DEC 74157	8	16
DEC 74175	8	16
DEC 8266	8	16
DEC 8837	8	16
DEC 8838	8	16
DEC 8640	Ø1	Ø8
IC TYPE	GND	+5V

GND AND 5V ARE USUALLY PIN 7 AND 14 RESPECTIVELY EXCEPTIONS ARE STATED ABOVE

IC PIN LOCATIONS

REV	CHANGE NO	CHK	DATE	ENG.	PROD. ENG.	PROD.	DRAWING
A	00001	R. IKNAIAN	1-15-75	H. Swanson			M7843-00001
B	00002	R. IKNAIAN	5-23-75	H. Swanson			M7843-00002
C	00003	R. IKNAIAN	6-28-75				M7843-00003
D	00004	R. IKNAIAN	3-30-76	H. Swanson			M7843-00004

DEC NO	EIA NO.	DEC NO.	EIA NO.

SEMICONDUCTOR CONVERSION CHART

DRN. H. Swanson DATE 10/10/76
CHK'D. DATE 10/14/76
ENG. DATE 10/20/77
PROJ. ENG. DATE 10/20/77
PROD. DATE 12/29/76
NEXT HIGHER ASSY
SCALE
SHEET 1 OF 8

digital EQUIPMENT CORPORATION MAYNARD MASSACHUSETTS

TITLE DRI11-K DIGITAL I/O

SIZE D CODE CS NUMBER M7843-Ø-1 REV. D

DIST.

DEC FORM NO DRD 135-8

"THIS DRAWING AND SPECIFICATIONS, HEREIN, ARE THE PROPERTY OF DIGITAL EQUIPMENT CORPORATION AND SHALL NOT BE REPRODUCED OR COPIED OR USED IN WHOLE OR IN PART AS THE BASIS FOR THE MANUFACTURE OR SALE OF ITEMS WITHOUT WRITTEN PERMISSION.
COPYRIGHT © 1974 DIGITAL EQUIPMENT CORPORATION"

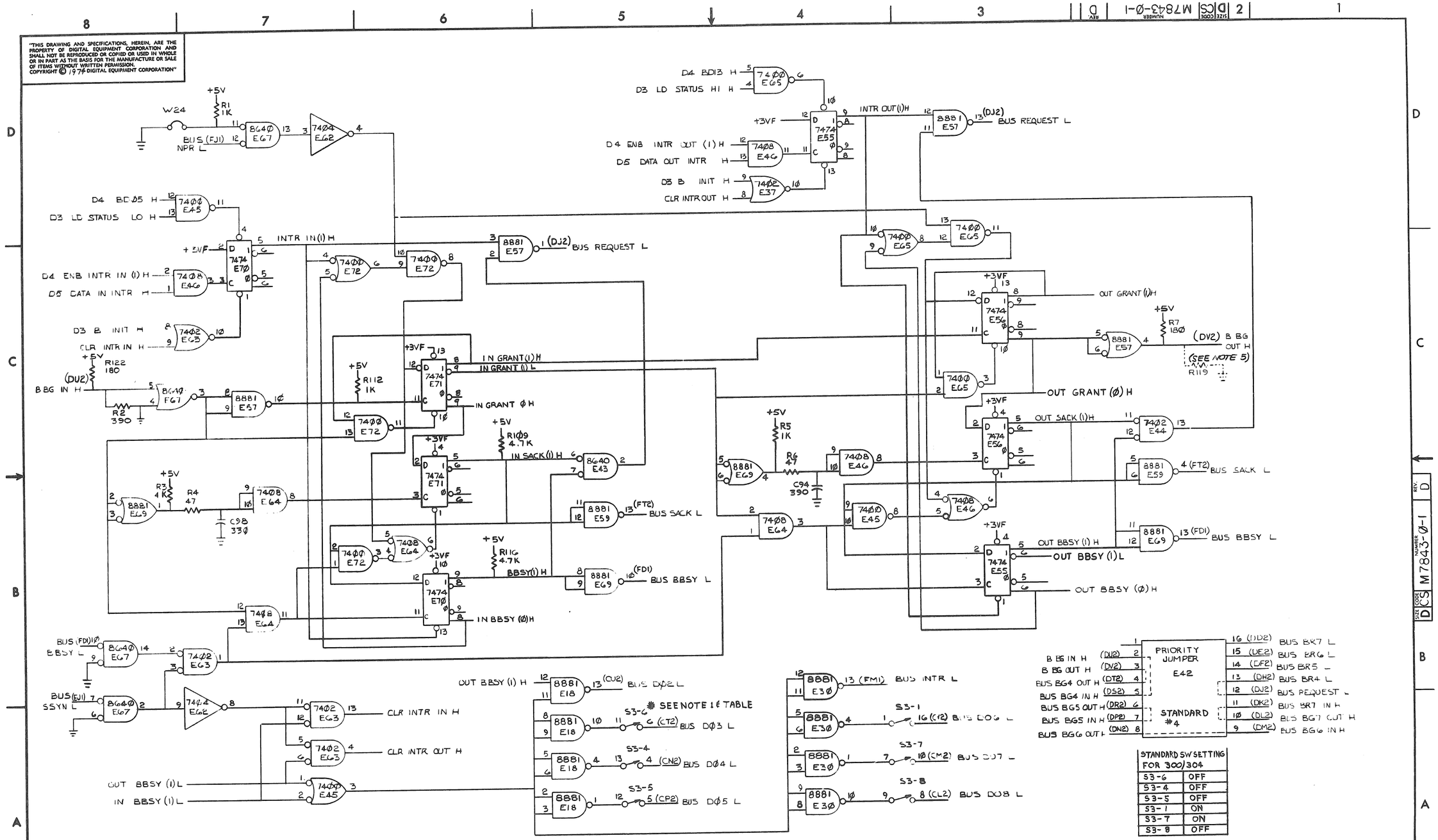

STANDARD SW SETTING FOR 300/304	
S3-6	OFF
S3-4	OFF
S3-5	OFF
S3-1	ON
S3-7	ON
S3-8	OFF

(UNIBUS CONTROL)

REVISIONS		
CHK	CHANGE NO.	REV.

TITLE	SIZE	CODE	NUMBER	REV.
DRI1-K DIGITAL I/O (D2)	D	CS	M7843-Ø-1	D
SCALE —	SHEET 2 OF 8		DIST.	

"THIS DRAWING AND SPECIFICATIONS, HEREIN, ARE THE PROPERTY OF DIGITAL EQUIPMENT CORPORATION AND SHALL NOT BE REPRODUCED OR COPIED OR USED IN WHOLE OR IN PART AS THE BASIS FOR THE MANUFACTURE OR SALE OF ITEMS WITHOUT WRITTEN PERMISSION. COPYRIGHT © 1974 DIGITAL EQUIPMENT CORPORATION"

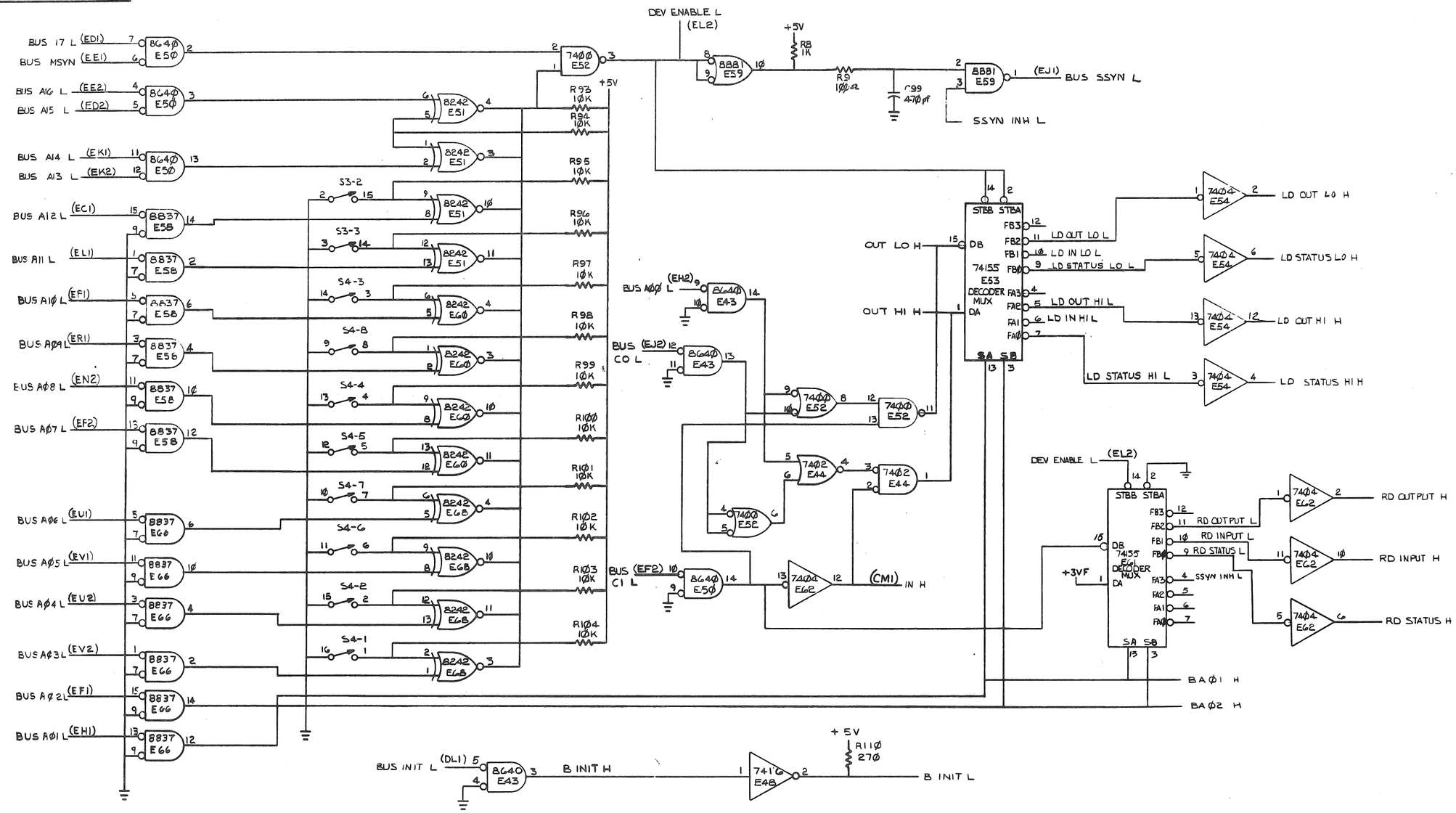

(ADDRESS SELECTION)

TITLE	SIZE	CODE	NUMBER	REV.
DR11-K DIGITAL I/O (D3)	D	CS	M7843-0-1	D

SCALE 74 | SHEET 3 OF 8 | DIST.

REVISIONS

CHK	CHANGE NO.	REV.

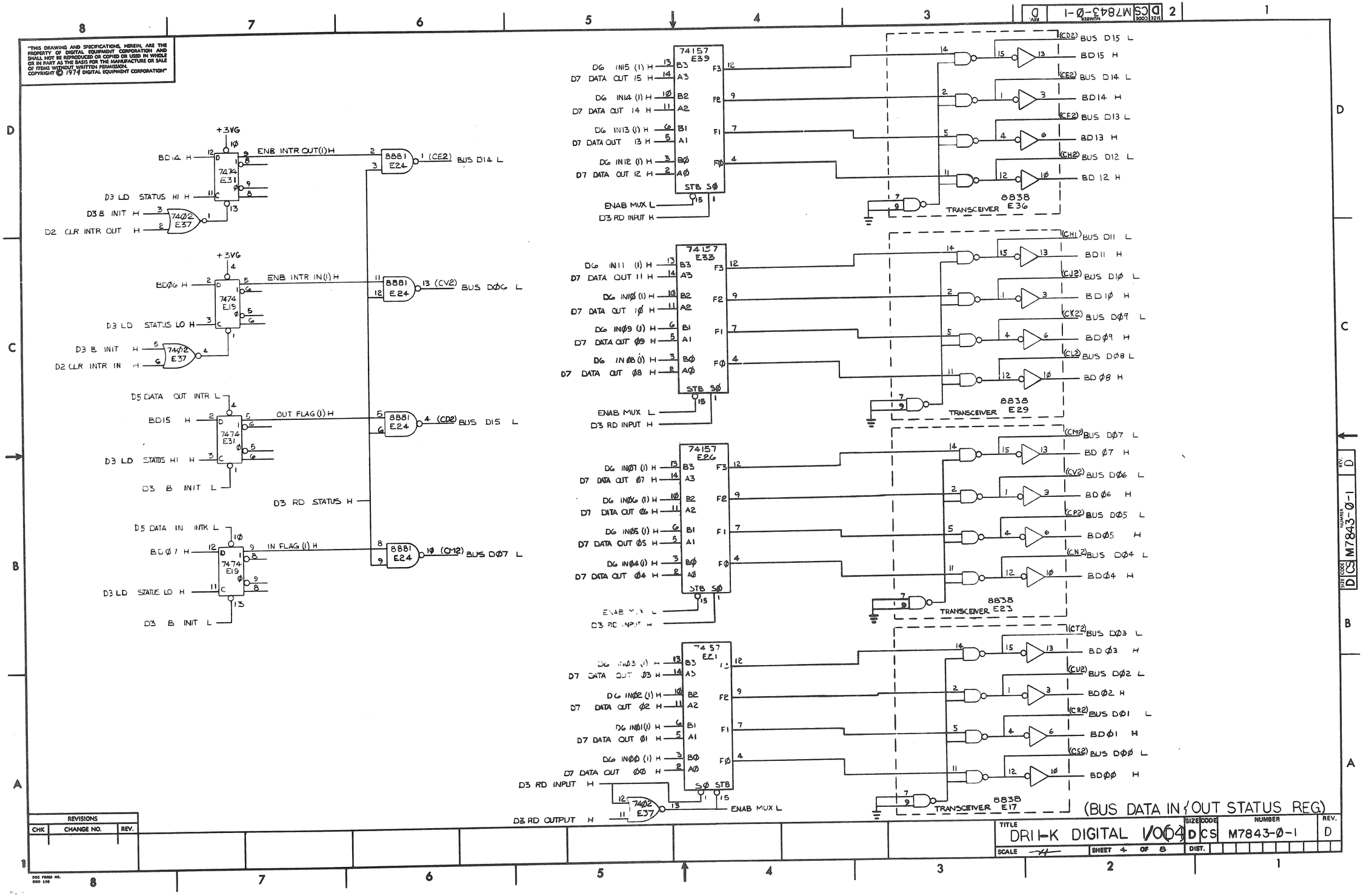

"THIS DRAWING AND SPECIFICATIONS, HEREIN, ARE THE PROPERTY OF DIGITAL EQUIPMENT CORPORATION AND SHALL NOT BE REPRODUCED OR COPIED OR USED IN WHOLE OR IN PART AS THE BASIS FOR THE MANUFACTURE OR SALE OF ITEMS WITHOUT WRITTEN PERMISSION. COPYRIGHT © 1974 DIGITAL EQUIPMENT CORPORATION"
+3VG
BD14 H
ENB INTR OUT(1) H
7474 E31
D3 LD STATUS HI H
D3 B INIT H
D2 CLR INTR OUT H
7402 E37
8881 E24
(CE2) BUS D14 L
BDØ6 H
ENB INTR IN(1) H
7474 E19
D3 LD STATUS LO H
D3 B INIT H
D2 CLR INTR IN H
(CV2) BUS DØ6 L
D5 DATA OUT INTR L
BD15 H
OUT FLAG(1) H
D3 LD STATUS HI H
D3 B INIT L
(CD2) BUS D15 L
D3 RD STATUS H
D5 DATA IN INTR L
BDØ7 H
IN FLAG(1) H
D3 LD STATUS LO H
D3 B INIT L
(CM2) BUS DØ7 L
74157 E39
D6 IN15 (1) H
D7 DATA OUT 15 H
D6 IN14 (1) H
D7 DATA OUT 14 H
D6 IN13 (1) H
D7 DATA OUT 13 H
D6 IN12 (1) H
D7 DATA OUT 12 H
STB SØ
ENAB MUX L
D3 RD INPUT H
8838 E36
TRANSCEIVER
(CD2) BUS D15 L
BD15 H
(CE2) BUS D14 L
BD14 H
(CF2) BUS D13 L
BD13 H
(CH2) BUS D12 L
BD 12 H
74157 E33
D6 IN11 (1) H
D7 DATA OUT 11 H
D6 IN1Ø (1) H
D7 DATA OUT 1Ø H
D6 INØ9 (1) H
D7 DATA OUT Ø9 H
D6 INØ8 (1) H
D7 DATA OUT Ø8 H
8838 E29
TRANSCEIVER
(CH1) BUS D11 L
BD11 H
(CJ2) BUS D1Ø L
BD1Ø H
(CK2) BUS DØ9 L
BDØ9 H
(CL2) BUS DØ8 L
BD Ø8 H
74157 E26
D6 INØ7 (1) H
D7 DATA OUT Ø7 H
D6 INØ6 (1) H
D7 DATA OUT Ø6 H
D6 INØ5 (1) H
D7 DATA OUT Ø5 H
D6 INØ4 (1) H
D7 DATA OUT Ø4 H
8838 E23
TRANSCEIVER
(CM2) BUS DØ7 L
BD Ø7 H
(CV2) BUS DØ6 L
BD Ø6 H
(CP2) BUS DØ5 L
BDØ5 H
(CN2) BUS DØ4 L
BDØ4 H
74157 E21
D6 INØ3 (1) H
D7 DATA OUT Ø3 H
D6 INØ2 (1) H
D7 DATA OUT Ø2 H
D6 INØ1 (1) H
D7 DATA OUT Ø1 H
D6 INØØ (1) H
D7 DATA OUT ØØ H
D3 RD INPUT H
D3 RD OUTPUT H
7402 E37
ENAB MUX L
8838 E17
TRANSCEIVER
(CT2) BUS DØ3 L
BD Ø3 H
(CU2) BUS DØ2 L
BDØ2 H
(CR2) BUS DØ1 L
BDØ1 H
(CS2) BUS DØØ L
BDØØ H
(BUS DATA IN & OUT STATUS REG)
REVISIONS
CHK
CHANGE NO.
REV.
TITLE
DRI1-K DIGITAL I/O(D4)
SIZE D
CODE CS
NUMBER M7843-Ø-1
REV. D
SCALE
SHEET 4 OF 8
DIST.

"THIS DRAWING AND SPECIFICATIONS, HEREIN, ARE THE PROPERTY OF DIGITAL EQUIPMENT CORPORATION AND SHALL NOT BE REPRODUCED OR COPIED OR USED IN WHOLE OR IN PART AS THE BASIS FOR THE MANUFACTURE OR SALE OF ITEMS WITHOUT WRITTEN PERMISSION.
COPYRIGHT © 1974 DIGITAL EQUIPMENT CORPORATION"

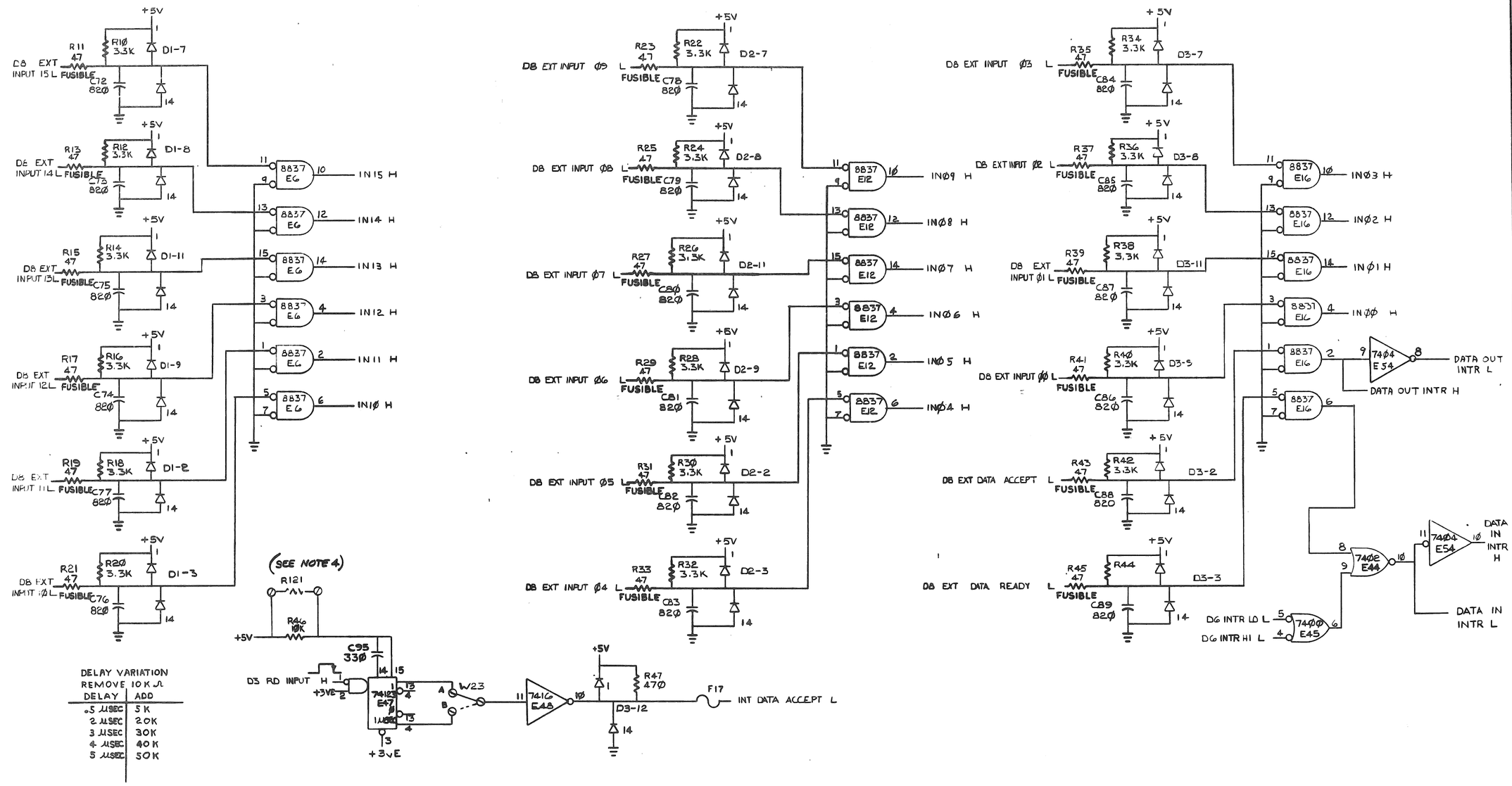

DELAY VARIATION
REMOVE 10K Ω

DELAY	ADD
.5 μSEC	5 K
2 μSEC	20K
3 μSEC	30K
4 μSEC	40 K
5 μSEC	50K

REVISIONS		
CHK	CHANGE NO.	REV.

(EXT INPUT RECEIVER)

TITLE	SIZE	CODE	NUMBER	REV.
DP11-K DIGITAL I/O (5)	D	CS	M7843-0-1	D

SCALE — SHEET 5 OF 6 DIST.

"THIS DRAWING AND SPECIFICATIONS, HEREIN, ARE THE PROPERTY OF DIGITAL EQUIPMENT CORPORATION AND SHALL NOT BE REPRODUCED OR COPIED OR USED IN WHOLE OR IN PART AS THE BASIS FOR THE MANUFACTURE OR SALE OF ITEMS WITHOUT WRITTEN PERMISSION.
COPYRIGHT © 1974 DIGITAL EQUIPMENT CORPORATION"

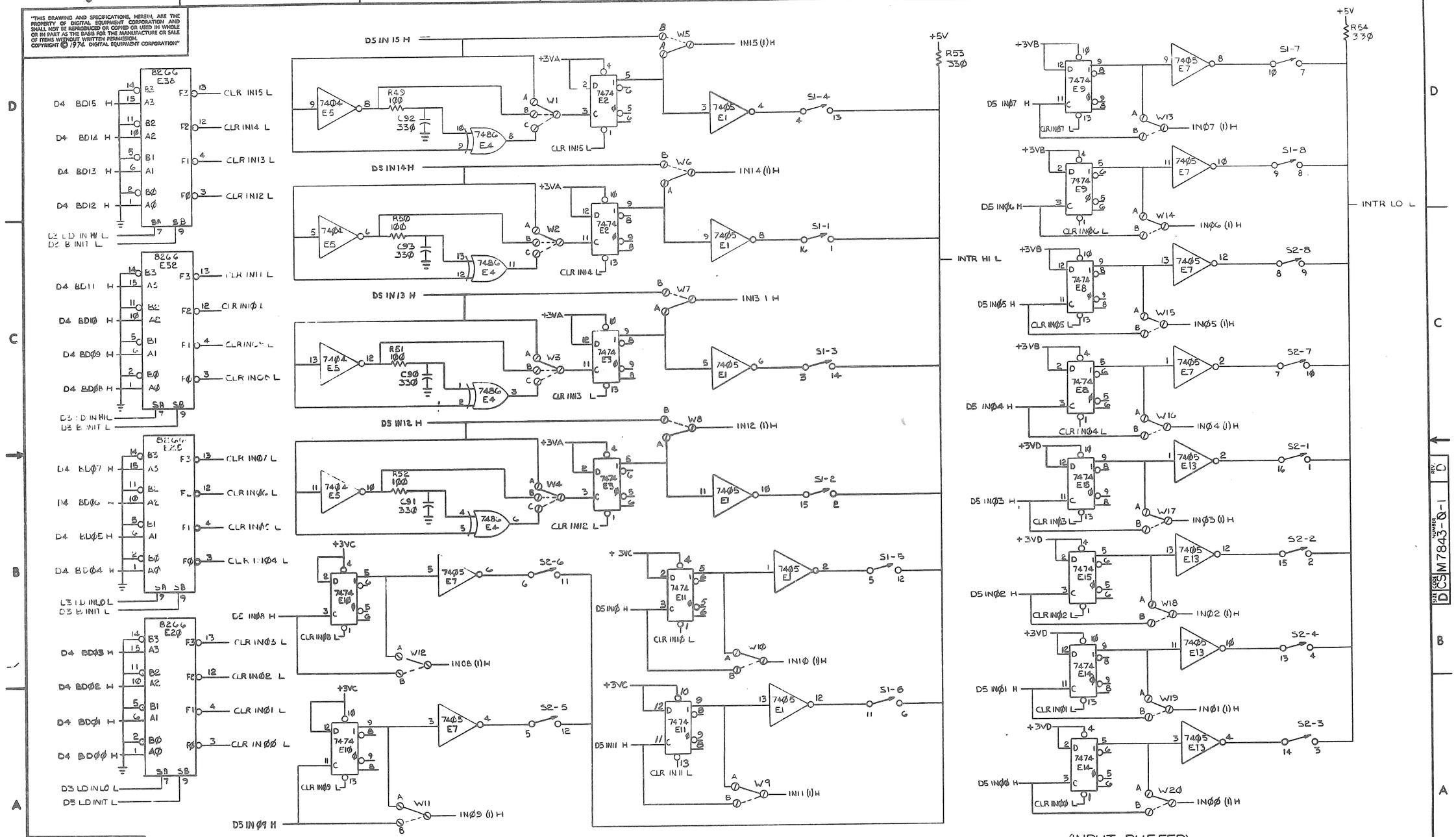

REVISIONS		
CHK	CHANGE NO.	REV.

TITLE: DR11-K DIGITAL I/O (D6) (INPUT BUFFER)

SIZE	CODE	NUMBER	REV.
D	CS	M7843-0-1	D

SCALE | SHEET 6 OF 8 | DIST.

"THIS DRAWING AND SPECIFICATIONS, HEREIN, ARE THE PROPERTY OF DIGITAL EQUIPMENT CORPORATION AND SHALL NOT BE REPRODUCED OR COPIED OR USED IN WHOLE OR IN PART AS THE BASIS FOR THE MANUFACTURE OR SALE OF ITEMS WITHOUT WRITTEN PERMISSION. COPYRIGHT © 1974 DIGITAL EQUIPMENT CORPORATION"

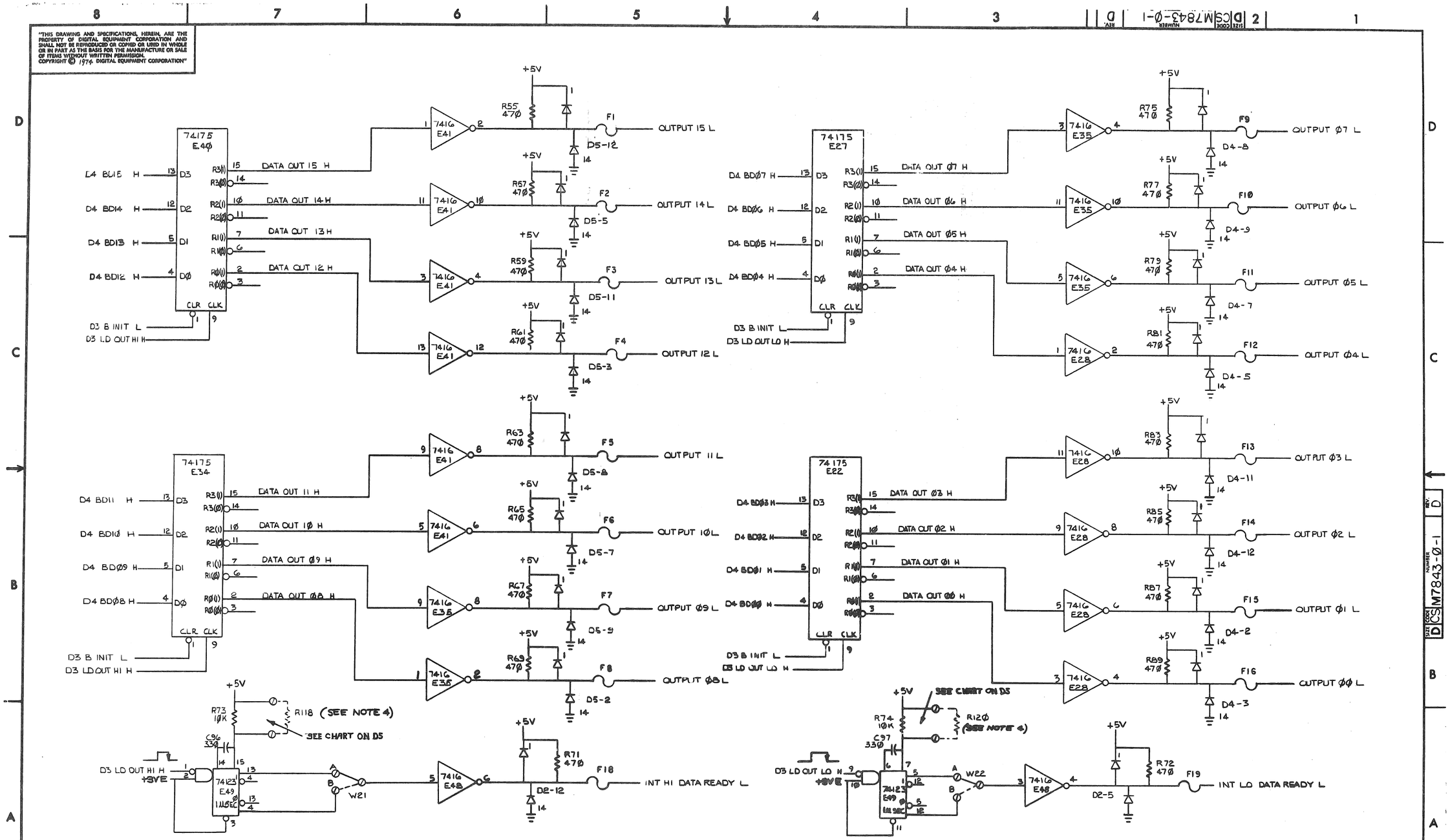

REVISIONS		
CHK	CHANGE NO.	REV.

(OUTPUT REG)

TITLE	SIZE	CODE	NUMBER	REV.
DR11-K DIGITAL I/O (D7)	D	CS	M7843-0-1	D

SCALE — SHEET 7 OF 8 — DIST.

"THIS DRAWING AND SPECIFICATIONS, HEREIN, ARE THE PROPERTY OF DIGITAL EQUIPMENT CORPORATION AND SHALL NOT BE REPRODUCED OR COPIED OR USED IN WHOLE OR IN PART AS THE BASIS FOR THE MANUFACTURE OR SALE OF ITEMS WITHOUT WRITTEN PERMISSION.
COPYRIGHT © 1974 DIGITAL EQUIPMENT CORPORATION"

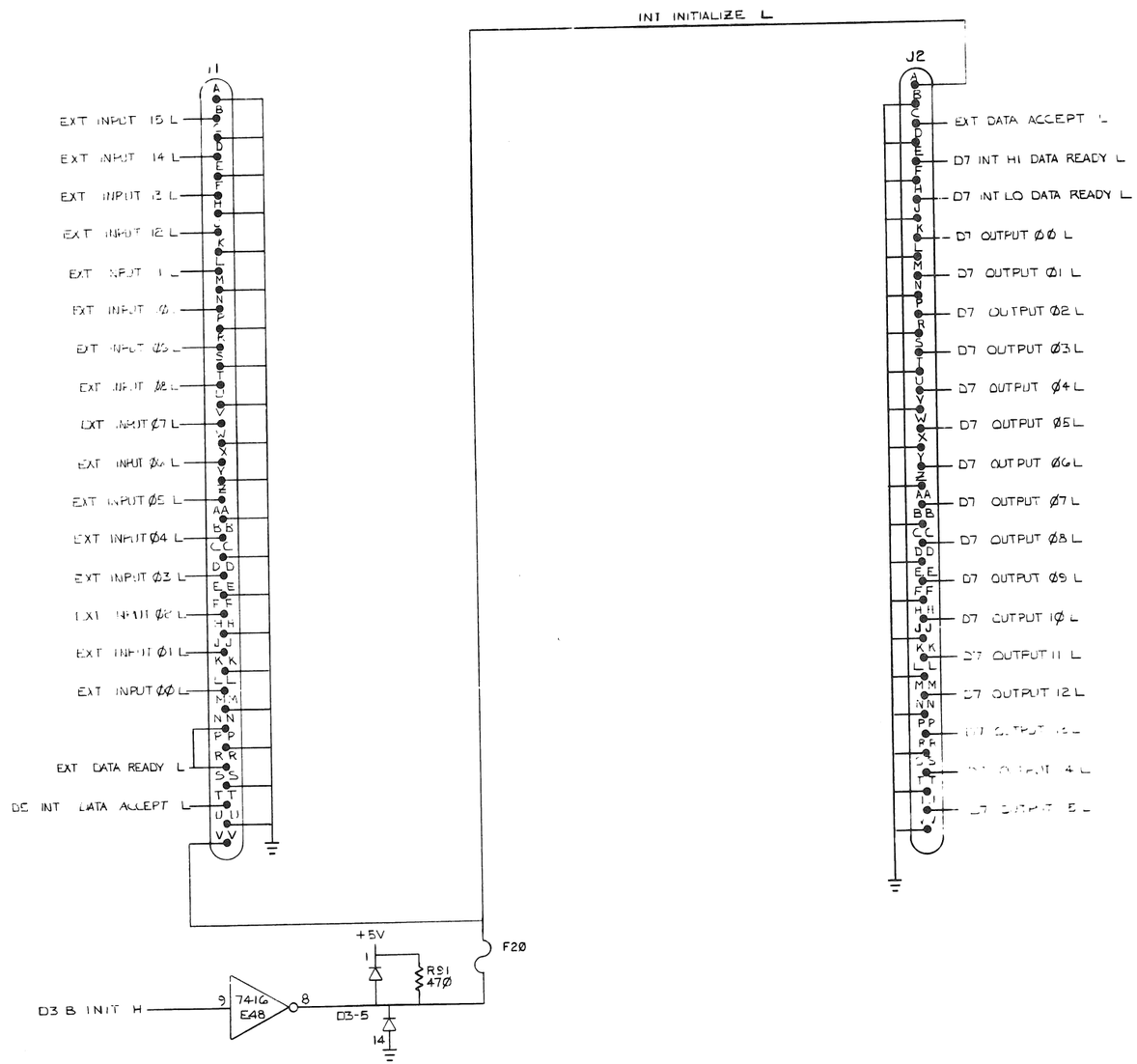

(BERG PIN ASSIGN)

REVISIONS		
CHK	CHANGE NO.	REV.

TITLE	SIZE	CODE	NUMBER	REV.
DRII-K DIGITAL I/O(D8)	D	CS	M7843-Ø-1	D
SCALE —	SHEET 8 OF 8	DIST.		

DEC FORM NO. DRD 150

"THIS DRAWING AND SPECIFICATIONS, HEREIN, ARE THE PROPERTY OF DIGITAL EQUIPMENT CORPORATION AND SHALL NOT BE REPRODUCED OR COPIED OR USED IN WHOLE OR IN PART AS THE BASIS FOR THE MANUFACTURE OR SALE OF ITEMS WITHOUT WRITTEN PERMISSION. COPYRIGHT © 1976 DIGITAL EQUIPMENT CORPORATION"

WIRE TABLE

FROM	TO	FROM	TO
P1-A	P2-VV	P1-Y	P2-X
P1-B	P2-UU	P1-Z	P2-W
P1-C	P2-TT	P1-AA	P2-V
P1-D	P2-SS	P1-BB	P2-U
P1-E	P2-RR	P1-CC	P2-T
P1-F	P2-PP	P1-DD	P2-S
P1-H	P2-NN	P1-EE	P2-R
P1-J	P2-MM	P1-FF	P2-P
P1-K	P2-LL	P1-HH	P2-N
P1-L	P2-KK	P1-JJ	P2-M
P1-M	P2-JJ	P1-KK	P2-L
P1-N	P2-HH	P1-LL	P2-K
P1-P	P2-FF	P1-MM	P2-J
P1-R	P2-EE	P1-NN	P2-H
P1-S	P2-DD	P1-PP	P2-F
P1-T	P2-CC	P1-RR	P2-E
P1-U	P2-BB	P1-SS	P2-D
P1-V	P2-AA	P1-TT	P2-C
P1-W	P2-Z	P1-UU	P2-B
P1-X	P2-Y	P1-VV	P2-A

LEGEND

NUMBER	DIM "X"	PRECUT LENGTH
BCØBR-Ø1	1.00 FT.	1.00FT.1.5IN±.100IN
BCØBR-Ø2	2.00 FT.	2.00FT.1.5IN±.100IN
BCØBR-Ø3	3.00 FT.	3.00FT.1.5IN±1.00IN
BCØBR-Ø4	4.00 FT.	4.00FT.1.5IN±1.00IN
BCØBR-Ø5	5.00 FT.	5.00FT.1.5IN±1.00IN
BCØBR-Ø6	6.00 FT.	6.00FT.1.5IN±2.00IN
BCØBR-Ø7	7.00 FT.	7.00FT.1.5IN±2.00IN
BCØBR-Ø8	8.00 FT.	8.00FT.1.5IN±2.00IN
BCØBR-Ø9	9.00 FT.	9.00FT.1.5IN±2.00IN
BCØBR-1Ø	10.00 FT.	10.00FT.1.5IN±2.00IN
BCØBR-11	11.00 FT.	11.00FT.1.5IN±3.00IN
BCØBR-12	12.00 FT.	12.00FT.1.5IN±3.00IN
BCØBR-13	13.00 FT	13.00FT.1.5IN±3.00IN
BCØBR-14	14.00 FT	14.00FT.1.5IN±3.00IN
BCØBR-15	15.00 FT	15.00FT.1.5IN±3.00IN
BCØBR-16	16.00 FT	16.00FT.1.5IN±3.00IN
BCØBR-17	17.00 FT	17.00FT.1.5IN±3.00IN
BCØBR-18	18.00 FT	18.00FT.1.5IN±3.00IN
BCØBR-19	19.00 FT	19.00FT.1.5IN±3.00IN
BCØBR-2Ø	20.00 FT	20.00FT.1.5IN±3.00IN
BCØBR-25	25.00 FT	25.00FT.1.5IN±3.00IN
BCØBR-3Ø	30.00 FT	30.00FT.1.5IN±0.60FT
BCØBR-35	35.00 FT	35.00FT.1.5IN±0.70FT
BCØBR-5Ø	50.00 FT	50.00FT.1.5IN±1.00FT
BCØBR-6Ø	60.00 FT	60.00FT.1.5IN±1.20FT
BCØBR-75	75.00 FT	75.00FT.1.5IN±1.50FT
BCØBR-AØ	100.00 FT	100.00FT.1.5IN±2.00FT
BCØBR-A3	130.00 FT	130.00FT.1.5IN±2.00FT
BCØBR-A6	160.00 FT	160.00FT.1.5IN±2.00FT

1. ASSEMBLE THIS CABLE PER PROCESS SPEC #7606485-Ø-Ø.
2. CONNECTOR LEGEND IDENTIFICATION TO BE PLACED ON SHIELD SIDE OF CABLE IN THIS AREA AS SHOWN.
3. INSPECTION & TEST STAMPS TO BE PLACED AT EACH END OF THE CABLE ASSY.

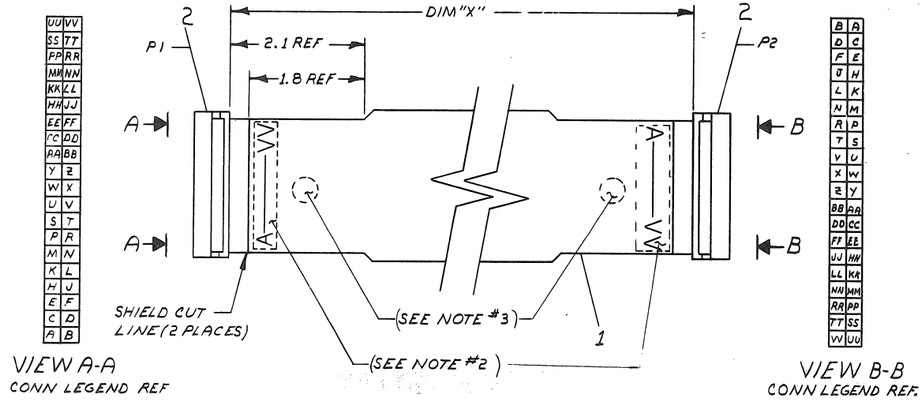

2	CONNECTOR, 40 SOCKET	1211206	2
A/R	CABLE, 40 COND. FLAT W/SHIELD	1700004	1
	DESCRIPTION	DWG./PART NO.	ITEM NO.

UNLESS OTHERWISE SPECIFIED DIMENSIONS ARE IN INCHES

ANGLES ±0° 30'	CLASS OF ACCURACY (CHECK ONE)	OVER 0 TO 0.3	OVER 0.3 TO 1.2	OVER 1.2 TO 4.0	OVER 4.0 TO 12.0	OVER 12.0 TO 40.0	OVER 40.0 TO 80.0
SURFACE QUALITY IN MICROINCHES	MEDIUM	±.004	±.008	±.012	±.016	±.024	±.04
	PREFERRED	±.012	±.016	±.025	±.04	±.063	±0.1

QUANTITY & VARIATION

THIRD ANGLE PROJECTION

REMOVE BURRS AND BREAK SHARP CORNERS

DO NOT SCALE DWG

MATERIAL

FINISH

DRN	D. FONTAINE	8-28-70
CHK'D	J. FLEMING	8-28-70
ENG	P. GARDNER	9-3-70
PROJ. ENG	GARDNER	9-3-70
PROD.	DONALD	9-4-70

NEXT HIGHER ASSY.

SCALE

SHEET 1 OF 1

FIRST USED ON

digital

TITLE BCØ8R I/O CABLE

SIZE	CODE	NUMBER	REV.
D	UA	BCØ8R-Ø-Ø	L

DIST.

REVISIONS			
CHK	CHANGE NO.		REV.
	BCØ8R-000		L
	REVISED & REDRAWN		
	S. HOLMES		

DEC FORM NO. DRD 100-C

This drawing and specifications, herein, are the property of Digital Equipment Corporation and shall not be reproduced or copied or used in whole or in part as the basis for the manufacture or sale of items without written permission.

NOTES:
1. CUT OFF EXCESS LENGTH OF PRONGS BEFORE SOLDERING.

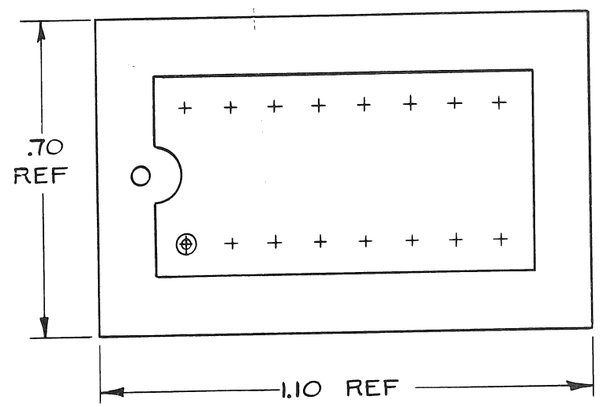

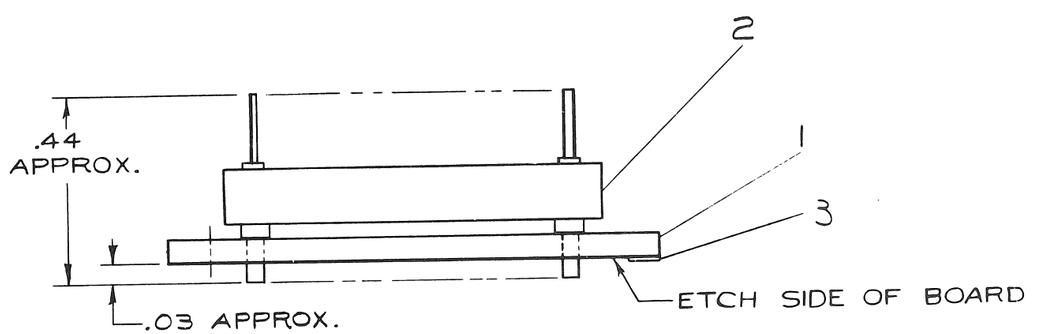

REF	DESCRIPTION	PART NO.	ITEM NO.
	CIRCUIT SCHEMATIC	B-CS-5408776-0-1	
A/R	TAPE VINYL 3M TRANSPARENT .75 X 1.12	9008269	3
1	PLUG, 16 PRONG, AUGAT	1209837	2
1	ETCH BOARD	D-IA-5008775-0-0	1

QTY. — PARTS LIST

FIRST USED ON OPTION/MODEL: M78Ø

TOLERANCE DECIMALS
XXX = ±.005
XX = ±.02
X = ±.1

UNLESS OTHERWISE SPECIFIED
UNLESS OTHERWISE SPECIFIED
DIMENSION IN INCHES
TOLERANCES
DECIMALS ± .005 — FRACTIONS ± 1/64 — ANGLES ± 0°30'
FINAL SURFACE QUALITY ✓
REMOVE BURRS AND BREAK SHARP CORNERS

MATERIAL: SEE PARTS LIST

FINISH: —

		DATE
DRN.	W. F. McCarthy	5/13/70
CHK'D	J. Fleming	5-22-70
ENG.	C. R. Blair	6/26/70
PROJ. ENG.	[illegible]	6-26-70
PROD.	[illegible]	6/29/70

NEXT HIGHER ASSY: M78Ø

SCALE: 5/1

SHEET 1 OF 1

digital EQUIPMENT CORPORATION
MAYNARD, MASSACHUSETTS

TITLE: PRIORITY JUMPER LEVEL #4

SIZE C — CODE IA — NUMBER 5408776-0-0 — REV.

DIST. G

REVISIONS: REV. — CHANGE NO. — CHK

DEC FORM NO. DRC 100

SIZE	CODE	NUMBER	REV.
B	CS	5408776-0-1	A

THIS SCHEMATIC IS FURNISHED ONLY FOR TEST AND MAINTENANCE PURPOSES. THE CIRCUITS ARE PROPRIETARY IN NATURE AND SHOULD BE TREATED ACCORDINGLY.
COPYRIGHT 1970 BY DIGITAL EQUIPMENT CORPORATION

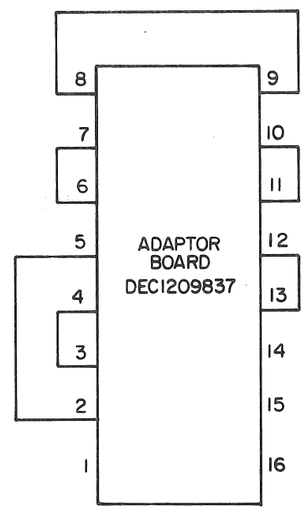

REVISIONS		
CHK	CHG NO	REV
	00001	A

DRN.	NANCY MOORE	DATE	9/22/70
CHK'D		DATE	
ENG.		DATE	
PROD.		DATE	

TRANSISTOR & DIODE CONVERSION CHART

DEC	EIA	DEC	EIA

digital
EQUIPMENT CORPORATION
MAYNARD, MASSACHUSETTS

TITLE PRIORITY JUMPER LEVEL #4 5408776

SIZE	CODE	NUMBER	REV.
B	CS	5408776-0-1	A

PRINTED CIRCUIT REV. A B

DEC FORM NO
DRB 102

5 DIST. 324.43 5 Pink

This document contains confidential proprietary information of DEC. This information shall not be disclosed to persons outside the employ of DEC, except by DEC personnel so authorized by DEC, and only for use by such other persons in the design, production or manufacture of products for DEC. Copyright © Digital Equipment Corporation.

DIGITAL EQUIPMENT CORPORATION
MAYNARD, MASSACHUSETTS

ENGINEERING SPECIFICATION

DATE 12/20/74

TITLE PRELIMINARY DR11-K SPECIFICATION, CHECKOUT AND ACCEPTANCE PROCEDURE

REVISIONS

REV	DESCRIPTION	CHG NO	ORIG	DATE	APPD BY	DATE

ENG	APPD	SIZE	CODE	NUMBER	REV
Bruce Johnson	Russell Johnson	A	SP	DR11K-0-2	

DEC 16-(392)-1079A-R873
DRA 107A

SHEET 1 OF 5

ENGINEERING SPECIFICATION

CONTINUATION SHEET

TITLE PRELIMINARY DR11-K SPECIFICATION, CHECKOUT AND ACCEPTANCE PROCEDURE

The DR11-K is a Digital I/O option consisting of a hex module M7843, and a BC08-R-1 cable. Various configurations are available which are selectable by solder jumper and PC micro switches. The device addresses, vector addresses and up to 16 input interrupts, are selected by the micro switches. The input register triggering and data paths are solder jumper selectable. Refer to A-SP-DR11-K-0-0 for detailed descriptions and operations.

The M7843 will be assembled with a standard solder jumper configuration. The standard configuration is as follows:

W1-A	W2-A	W3-A	W4-A	W5-A	W6-A	W7-A
W8-A	W9-A	W10-A	W11-A	W12-A	W13-A	W14-A
W15-A	W16-A	W17-A	W18-A	W19-A	W20-A	W21-A
W22-A	W23-A	W24				

The device address is selected by PC mounted micro switches. The standard addresses are 167770 for status register, 167772 for input register and 167774 for output register. The switch configuration is as follows (switch on = Ø; switch off = 1):

	A12	A11	A10	A09	A08	A07	A06	A05	A04	A03
Switch	S3-2	S3-3	S4-3	S4-8	S4-4	S4-5	S4-7	S4-6	S4-2	S4-1
Position	On	Off	Off	Off	Off	Off	Off	Off	Off	Off

SIZE	CODE	NUMBER	REV
A	SP	DR11K-0-2	

DEC FORM NO DEC 16-(381)-1022-N370
DRA 108

SHEET 2 OF 5

ENGINEERING SPECIFICATION

CONTINUATION SHEET

TITLE PRELIMINARY DR11-K SPECIFICATION, CHECKOUT AND ACCEPTANCE PROCEDURE

The vector address is selected by PC mounted micro switches. The standard vector addresses are 300 for input interrupt and 304 for output interrupt. The switch configuration is as follows (switch on = 1; switch off - 0):

	D8	D7	D6	D5	D4	D3
Position	Off	On	On	Off	Off	Off
Switch	S3-8	S3-7	S3-1	S3-5	S3-4	S3-6

Each input bit can be selected by a PC mounted micro switch to generate an interrupt. The standard configuration is for all interrupt enable switches to be turned off. The following lists the interrupt enable switch for each input bit.

INPUT REG BIT	SWITCH
15	S1-4
14	S1-1
13	S1-3
12	S1-2
11	S1-6
10	S1-5
9	S2-5
8	S2-6
7	S1-7
6	S1-8
5	S2-8
4	S2-7
3	S2-1
2	S2-2
1	S2-4
0	S2-3

SIZE	CODE	NUMBER	REV
A	SP	DR11K-0-2	

DEC FORM NO DEC 16-(381)-1022-N370
DRA 108

SHEET 3 OF 5

ENGINEERING SPECIFICATION

CONTINUATION SHEET

TITLE PRELIMINARY DR11-K SPECIFICATION, CHECKOUT AND ACCEPTANCE PROCEDURE

MAINTENANCE CABLE (BC08-R-1)

This one foot cable is installed for running the diagnostic. It passes the output lines on J2 to the input lines on J1. J1 and J2 are H854 I/O connectors located at the top right of the M7843 module.

TESTING (Standard Module Configuration)

The diagnostic for the M7843 module is MAINDEC-11-DZDRG DR11-K Digital I/O test. Refer to the test write-up for loading procedure, starting procedure and test description. The procedure for checkout and acceptance is as follows:

1. Set all the interrupt enable switches on.
2. Start the diagnostic in the following test configuration (STANDARD SWITCH SETTING = 0000):
   a) No non-latching bits (000000)
   b) All input bits interrupting (177777)
   c) All inputs are negative (000000)
   d) All inputs are non-transition (000000)
3. Run test for 5 minutes
4. Set all the interrupt enable switches off
5. Start the diagnostic in the following test configuration (STANDARD SWITCH SETTING = 0000):
   a) No non-latching bits (000000)
   b) All input bits non-interrupting (000000)
   c) All inputs are negative (000000)
   d) All inputs are non-transition (000000)
6. Run test for 10 minutes

SIZE	CODE	NUMBER	REV
A	SP	DR11K-0-2	

DEC FORM NO DEC 16-(381)-1022-N370
DRA 108

SHEET 4 OF

7. If the DR11-K is system installed run the DR11 module of DEC-X-11 as a system test in accordance with DEC-X-11 specifications.

COULTER MODEL "S" CONFIGURATION

When the DR11-K option is specifically ordered as a Coulter Model "S" interface, the following solder jumpers and switch configurations are performed.

Solder Jumper

W1-C	W2-C	W3-C	W4-C				
W5-B	W6-B	W7-B	W8-B	W9-B	W10-B	W11-B	W12-B
W13-B	W14-B	W15-B	W16-B	W17-B	W18-B	W19-B	W20-B

Switches On

S1-4 S1-1 S1-3 S1-2

TESTING A COULTER CONFIGURED DR11-K

1. Set up the M7847 for Coulter Configuration
2. Start the diagnostic in the following test configurations:
   a) All input bits are non-latching (177777)
   b) Bits 15 through 12 are interrupting (170000)
   c) Bits 11 through 00 are negative inputs (000000)
   d) Bits 15 through 12 are transition inputs (170000)
3. Run the diagnostic for 15 minutes.

"THIS DRAWING AND SPECIFICATIONS, HEREIN, ARE THE PROPERTY OF DIGITAL EQUIPMENT CORPORATION AND SHALL NOT BE REPRODUCED OR COPIED OR USED IN WHOLE OR IN PART AS THE BASIS FOR THE MANUFACTURE OR SALE OF ITEMS WITHOUT WRITTEN PERMISSION.
COPYRIGHT © 1974 DIGITAL EQUIPMENT CORPORATION"

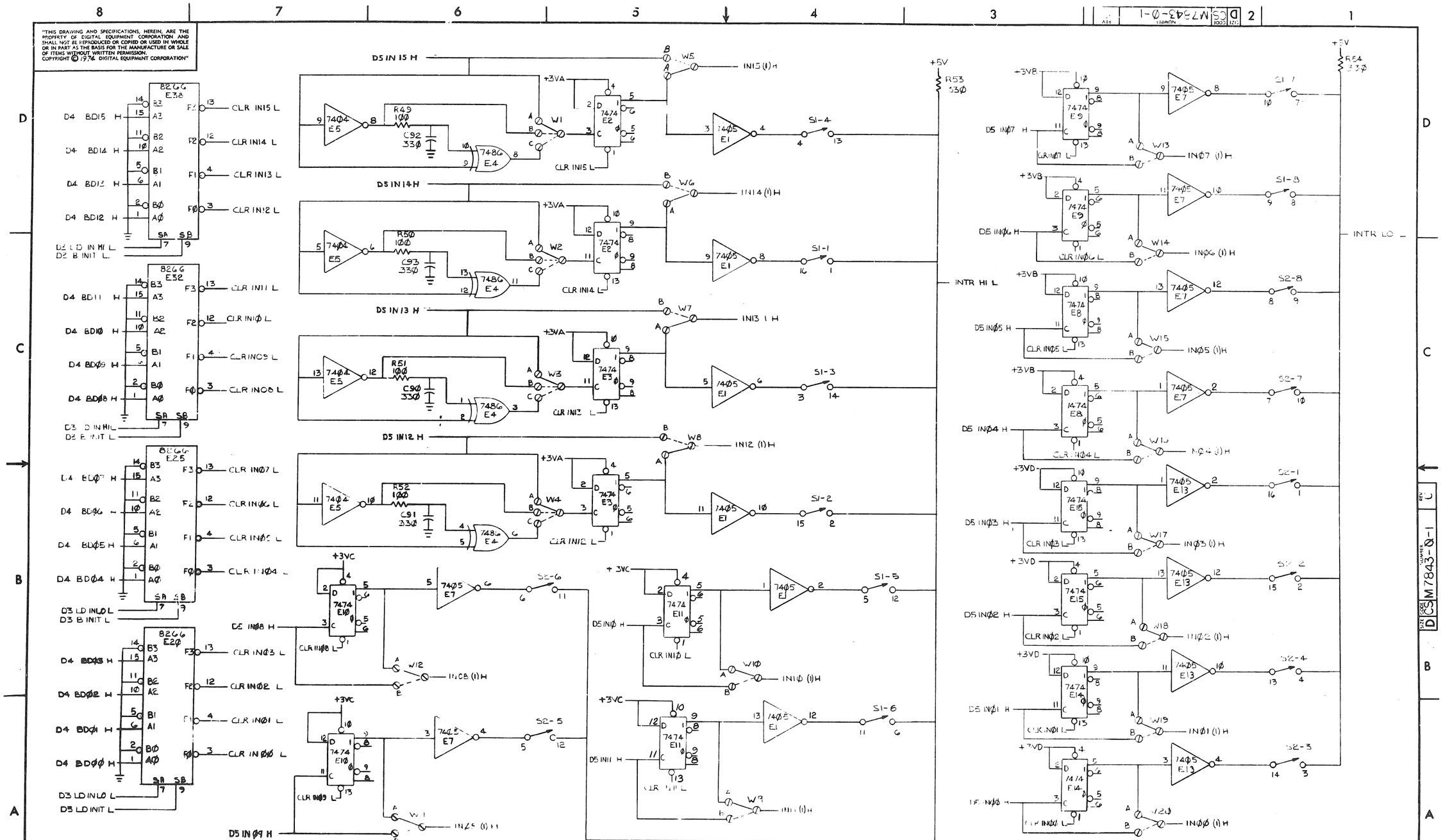

REVISIONS		
CHK	CHANGE NO.	REV.

(INPUT BUFFER)

TITLE	SIZE	CODE	NUMBER	REV.
DRII-K DIGITAL I/O (D6)	D	CS	M7843-Ø-1	C
SCALE	SHEET 6 OF 8	DIST.		

"THIS DRAWING AND SPECIFICATIONS, HEREIN, ARE THE PROPERTY OF DIGITAL EQUIPMENT CORPORATION AND SHALL NOT BE REPRODUCED OR COPIED OR USED IN WHOLE OR IN PART AS THE BASIS FOR THE MANUFACTURE OR SALE OF ITEMS WITHOUT WRITTEN PERMISSION. COPYRIGHT © 1974 DIGITAL EQUIPMENT CORPORATION"

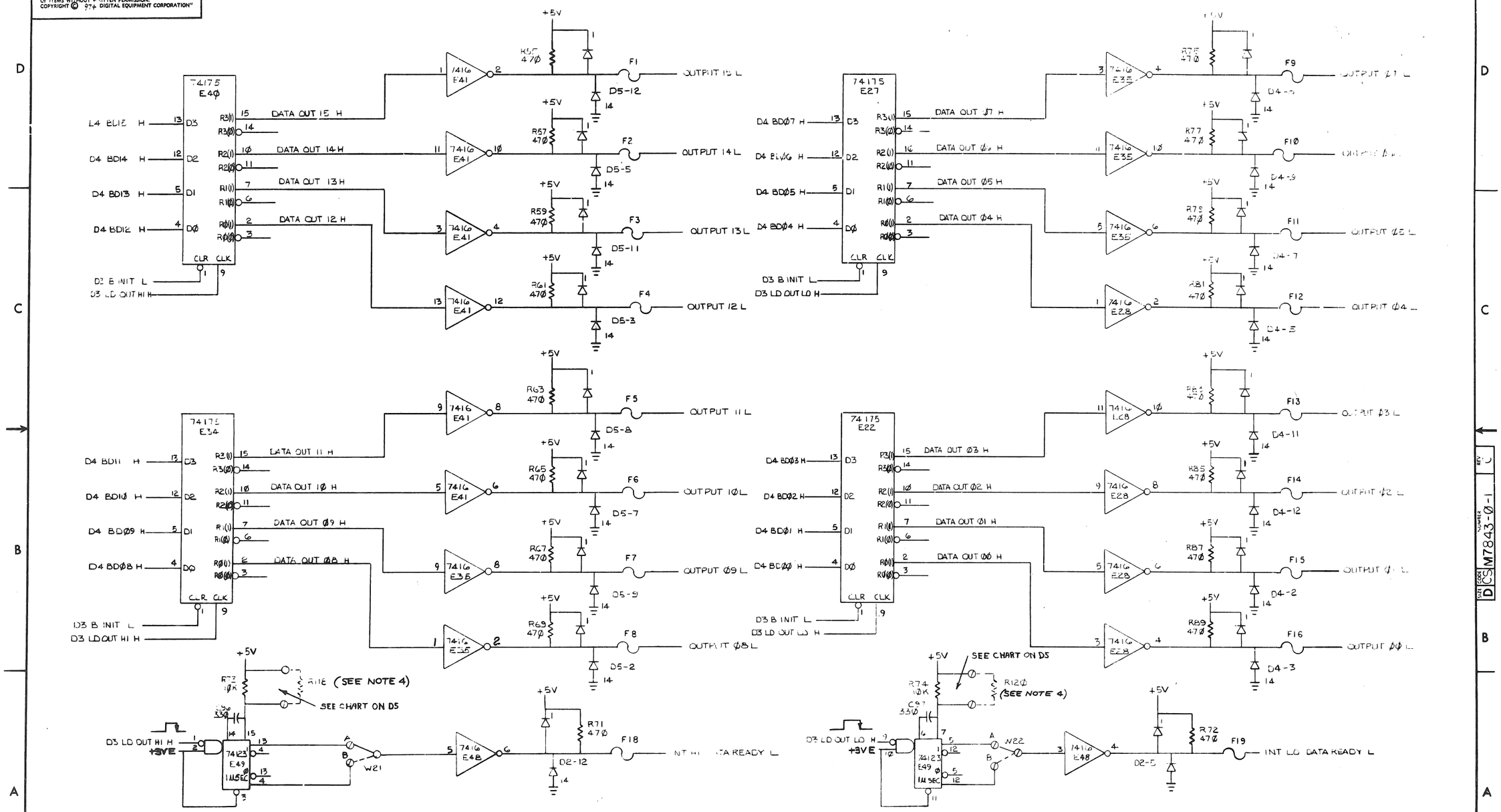

REVISIONS		
CHK	CHANGE NO.	REV.

(OUTPUT REG)

TITLE	SIZE	CODE	NUMBER	REV.
DR11-K DIGITAL I/O (D7)	D	CS	M7843-0-1	C
SCALE —	SHEET 7 OF 8		DIST.	