digital EQUIPMENT CORPORATION MAYNARD MASSACHUSETTS

DRAWING DIRECTORY

"THIS DRAWING AND SPECIFICATIONS, HEREIN, ARE THE PROPERTY OF DIGITAL EQUIPMENT CORPORATION AND SHALL NOT BE REPRODUCED OR COPIED OR USED IN WHOLE OR IN PART AS THE BASIS FOR THE MANUFACTURE OR SALE OF ITEMS WITHOUT WRITTEN PERMISSION. COPYRIGHT © 1972 , DIGITAL EQUIPMENT CORPORATION"

CUSTOMER PRINT SET INDEX

SEQUENCE		Page
Bus Interface	B-DD-BB11-H	1-3
Wired Ass'y	C-AD-7ØØ9Ø32-Ø-Ø	4,5
Wired Ass'y (PL)	A-PL-7ØØ9Ø32-Ø-Ø	6
Module Utilization	C-MU-BB11-H-1	7,8
Conn.(Unib. & I/O Cab)	C-IC-BB11-H-2	9,10
Data Input	C-BS-BB11-H-3	11
Data Out	C-BS-BB11-H-4	12,13
Device Selector & Interrupts	C-BS-BB11-H-5	14,15
Wire List (BB11-H) (Complete Wire List)	K-WL-BB11-H-6	16
Bus Output Interface	C & D-CS-M15Ø2-Ø-1	27,28 Schematics
Input Interface Module	D-CS-M15Ø1-Ø-1	29
Bus Gate Module	D-CS-M15ØØ-Ø-1	30
Address Selector	C-CS-M1Ø5-Ø-1	31
Bus Terminator	C-CS-M93Ø-Ø-1	32
Interrupt Control	D-CS-M7821-Ø-1	33,34
ENGINEERING SPECIFICATION	A-SP-BBII-H-8	35
INSTALLATION PROCEDURE	A-SP-BBII-H-9	41

THIS IS PRINT SET

UNIT VARIATIONS

VAR	TITLE	PRINT SET BB11-H
BB11-H	Bus Interface	X

REVISIONS DATE	CHG. NO.	REV
1/73	BB11-2	A
5/73	BBIIH-1	B
7/73	BBIIH-2	C
9/73	BBIIH-3	D
9/74	BBIIH-4	E

USED ON OPTION/MODEL
BB11-H

SHEET 1 OF 3

DRN. R. Robichard	DATE 7/22/72	TITLE BUS INTERFACE
CHK'D. D. Healy	DATE 8/3/72	
PROJ ENG. O. Mobisson	DATE 9/29/72	
PROD. W.L. Sipilla	DATE 9/29/72	SIZE B · CODE DD · NUMBER BB11-H · REV E
FIELD SERV. P. MANTH	DATE	DIST

DRB 106

DEC 16-(325)-1062-1A-R972

2

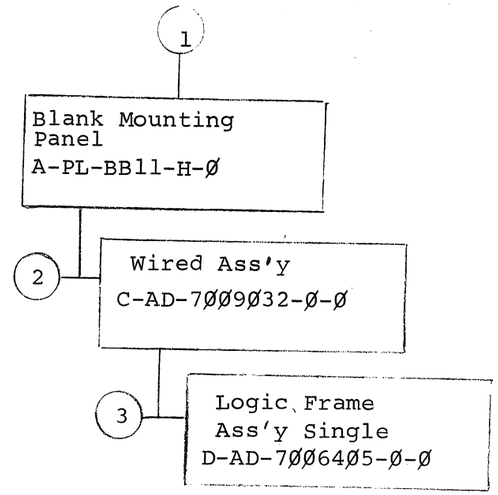

TITLE		SIZE	CODE	NUMBER	REV
BUS INTERFACE	SHEET 2 OF 3	B	DD	BB11-H	E

DRB 107
DEC 16—(325)—1062—3—N871

MECHANICAL

CUSTOMER PRINT SET (BB11-H)	MFG. SET	FIND NO.	DRAWING NO.	REV	NO OF SHT	DESCRIPTION	OPTION NO./FILE DATE
		1	A-PL-BB11-H-Ø		1	Blank Mounting Panel	
		2	C-AD-7ØØ9Ø32-Ø-Ø		2	Wired Ass'y	
			A-PL-7ØØ9Ø32-Ø-Ø		1	Wired Ass'y (P.L.)	
			18Ø98Ø5-1			Logic Serial # Decals	
		3	D-AD-7ØØ64Ø5-Ø-Ø		1	Logic Frame Ass'y Single	
			A-PL-7ØØ64Ø5-Ø-Ø		1	Logic Frame Ass'y Single (P.L.)	
			D-IA-74Ø75Ø7-Ø-Ø		1	Conn Block Mtg. Frame	

ELECTRICAL

CUSTOMER PRINT SET (BB11-H)	MFG SET	FIND NO.	DRAWING NO.	REV	NO OF SHT	DESCRIPTION	OPTION NO./FILE DATE
X		1	C-IC-BB11-H-2	A	2	Conn. (Unibus & I/O Cable)	
X			C-BS-BB11-H-3	A	1	Data Input (Four 16-bit words)	
X			C-BS-BB11-H-4	B	2	Data Out (1Ø &12) (14 & 16)	
X			C-BS-BB11-H-5	B	2	Device Selector and Interrupts	
X			C-MU-BB11-H-1		2	Module Utilization	
X			C&D-CS-M15Ø2-Ø-1	#	2	Bus Output Interface	M15Ø2
X			D-CS-M15Ø1-Ø-1	#	1	Input Interface Module	M15Ø1
X			D-CS-M15ØØ-Ø-1	#	1	Bus Gate Module	M15ØØ
X			D-CS-M7821-Ø-1	#	2	Interrupt Control	M7821
X			C-CS-M93Ø-Ø-1	#	1	Bus Terminator	M93Ø
X			C-CS-M1Ø5-Ø-1	#	1	Address Selector	M1Ø5
C			K-WL-BB11-H-6	B		Wire List	
X			A-SP-BB11-H-8	A	11	Engineering Specification	
X			A-SP-BBII-H-9	A	6	INSTALLATION PROCEDURE	
X		2	C-AD-7ØØ9Ø32-Ø-Ø		2	Wired Ass'y	
X			A-PL-7ØØ9Ø32-Ø-Ø		1	Wired Ass'y P.L.	
			A-PL-KIT11-HT-Ø		1	KIT11-H MAINTENANCE KIT	

CUSTOMER PRINT SET CODES
X = PRINT OF DOCUMENT INCLUDED IN PRINT SET
C = INCLUDES ALL PRINTS INDICATED ON DOCUMENT
S = CONFIDENTIAL AUTHORIZED SIGNATURE REQUIRED

TITLE	SHEET	SIZE	CODE	NUMBER	REV
BUS INTERFACE	3 OF 3	B	DD	BB11-H	E

DRB 108
DEC 16-(325)-1062-2B-R972

84

This drawing and specifications, herein, are the property of Digital Equipment Corporation and shall not be reproduced or copied or used in whole or in part as the basis for the manufacture or sale of items without written permission.

NOTES:
1. CONECTIONS ON ITEMS 2 & 3 TO BE SOLDERED AND LOCATED AT MINIMUM PRACTICAL HEIGHT ABOVE BLOCKS.
2. CONNECTOR BLOCKS TO BE GROUNDED TO GROUND LUG AS SHOWN.
3. ALL VERTICAL HAND WIRING TO RUN OUTSIDE OF CONNECTOR BLOCKS.
4. ASSY. DRAWN AS VIEWED WITH WIRE WRAP SIDE UP.

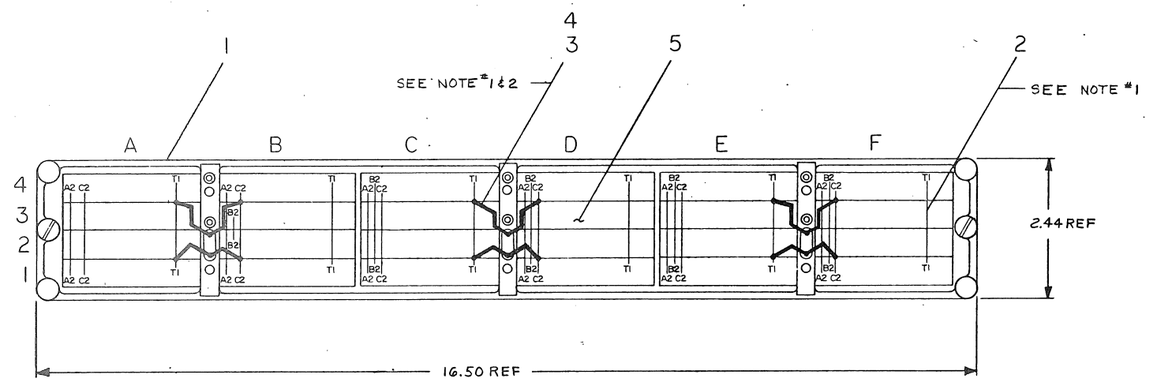

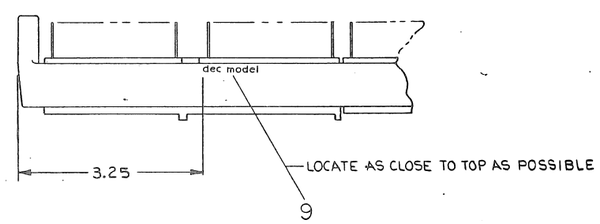

QTY.	DESCRIPTION	PART NO.	ITEM NO.
	PARTS LIST		

FIRST USED ON OPTION/MODEL: PDP 11

DO NOT SCALE DRAWING

UNLESS OTHERWISE SPECIFIED
DIMENSION IN INCHES
TOLERANCES
DECIMALS ± .005 FRACTIONS ± 1/64 ANGLES ± 0°30'
FINAL SURFACE QUALITY ✓
REMOVE BURRS AND BREAK SHARP CORNERS

MATERIAL —

FINISH —

		DATE
DRN.		
CHK'D.		9/21/72
ENG.	D. Mabrisson	9/7/72
PROJ. ENG.	D. Mabrisson	9/7/72
PROD.	W. J. Gale	9-7-72

NEXT HIGHER ASSY: B-DD-BB11-H

SCALE 1/1

SHEET 1 OF 2

DIGITAL EQUIPMENT CORPORATION
MAYNARD, MASSACHUSETTS

TITLE: WIRED ASSY (BB11-H)

SIZE	CODE	NUMBER	REV.
C	AD	7009032-0-0	

DIST.

REVISIONS: REV. | CHANGE NO. | CHK.

DEC FORM NO ORD 100

This drawing and specifications, herein, are the property of Digital Equipment Corporation and shall not be reproduced or copied or used in whole or in part as the basis for the manufacture or sale of items without written permission.

WIRE TABLE

ITEM NO	SIGNAL NAME	FROM PIN	TO PIN	COLOR	REMARKS
6	GROUND	AØ3D2	AØ3E2	BLACK	
		AØ3C2	AØ3D2		
		AØ3E2	AØ3F2		
		AØ3N1	AØ3P1		
		AØ3R1	AØ3S1		
		AØ3P1	AØ3R1		
		AØ3U1	AØ3V1		
		AØ3S1	AØ3U1		
		AØ3F2	AØ3N1	BLACK	
7	+5V	AØ3A2	BØ2A2	RED	
		BØ1A2	CØ1A2		WIRES MUST PHYSICALLY RUN TO THE LEFT OF THE BLOCK AND PINS.
		AØ3H2	DØ1A2		
		AØ3J2	EØ1A2		
		EØ1 A2	FØ1A2		
		AØ3K2	BØ3A2		
		BØ4A2	CØ4A2		WIRES MUST PHYSICALLY RUN TO THE RIGHT OF THE BLOCK AND PINS.
		AØ3L2	DØ4A2		
		AØ3M2	EØ4A2		
		EØ4A2	FØ4A2	RED	
8	−15V	AØ3B2	BØ3B2	BLUE	
		AØ3B1	BØ2B2		
		AØ3C1	CØ1B2		WIRES MUST PHYSICALLY RUN TO THE LEFT OF THE BLOCK AND PINS.
		AØ3D1	DØ1B2		
		AØ3E1	EØ1B2		
		AØ3F1	FØ1B2		
		AØ3H1	CØ4B2		WIRES MUST PHYSICALLY RUN TO THE RIGHT OF THE BLOCK AND PINS.
		AØ3J1	DØ4B2		
		AØ3K1	EØ4B2		
		AØ3L1	FØ4B2	BLUE	

QTY.	DESCRIPTION	PART NO.	ITEM NO.

PARTS LIST

REVISIONS | REV. | CHANGE NO. | CHK

FIRST USED ON OPTION/MODEL: PDP 11

DO NOT SCALE DRAWING

UNLESS OTHERWISE SPECIFIED DIMENSION IN INCHES
TOLERANCES
DECIMALS ± .005 FRACTIONS ± 1/64 ANGLES ± 0°30'
FINAL SURFACE QUALITY ✓
REMOVE BURRS AND BREAK SHARP CORNERS

MATERIAL: —

FINISH: —

DRN [illegible] DATE [illegible]
CHK'D D. Kaly DATE 8/21/72
ENG. [illegible] DATE 9/7/72
PROJ. ENG. [illegible] DATE 9/7/72
PROD. [illegible] DATE 9-7-72

NEXT HIGHER ASSY: B-DD-BB11-H

SCALE 1/1
SHEET 2 OF 2

digital EQUIPMENT CORPORATION MAYNARD MASSACHUSETTS

TITLE: WIRED ASSY (BB11-H)

SIZE C | CODE AD | NUMBER 7009032-0-0 | REV.

DIST.

DEC FORM NO DRD 100

C AD 7009032-0-0

96

DIGITAL EQUIPMENT CORPORATION
MAYNARD, MASSACHUSETTS

PARTS LIST

MADE BY RAY ROUBICHARD	CHECKED D.HEALY	SECTION 1
DATE 7/26/72	DATE 8/2/72	
ENG Odd. Mobisson	PROD Gill Sjula	ISSUED SECT. 1
DATE 9/7/72	DATE 9-7-72	

ITEM NO.	DWG NO./PART NO.	DESCRIPTION	QUANTITY/VARIATION
1	D-AD-7006405-0-0	LOGIC FRAME ASSY SINGLE	1
2	1205541	BUS STRIP	A/R
3	9107560-01	22 AWG BUS WIRE	A/R
4	9107265-09	#22 TUBING TEFLON, WHITE	A/R
5	9105740-44	30 AWG SOLID KYNAR INS WIRE, YEL	A/R
6	9107470-00	24 AWG SOLID KYNAR INS WIRE, BLK	A/R
7	9107470-22	24 AWG SOLID KYNAR INS WIRE, RED	A/R
8	9107470-66	24 AWG SOLID KYNAR INS WIRE, BLUE	A/R
9	1809805-1	LOGIC SERIAL # DECALS	1
REF	K-WL-BB11-H-6	WIRE LIST	X

TITLE	ASSY NO.	SIZE	CODE	NUMBER	REV.	ECO NO.
WIRED ASSY (BB11-H)	C-AD-7009032-0-0	A	PL	7009032-0-0		
	SHEET 1 OF 1	DIST.				

DEC FORM DEC 16-(325)-1031-N870
DRA 110

This drawing and specifications, herein, are the property of Digital Equipment Corporation and shall not be reproduced or copied or used in whole or in part as the basis for the manufacture or sale of items without written permission

NOTES:

1. NO MODULES ARE SUPPLIED WITH THIS OPTION
2. MODULES AND SIGNAL NAMES ON THIS SHEET ARE TO SHOW MODULE ASSIGNMENTS. THESE LOCATIONS ARE PREWIRED FOR THE I/O BUS AND POWER.
3. ASSY. DRAWN AS VIEWED WITH WIRE WRAP PIN SIDE UP.

SEE NOTES:

☐ IF END OF BUS REPLACE M920 WITH M930.

X IF LAST UNIT IN BASIC BOX REPLACE M920 WITH BC11A CABLE END WHEN EXPANDING TO PERIPHERAL BOX.

▲ IF FIRST UNIT IN EXPANDER BOX REPLACE M920 WITH BC11A CABLE END.

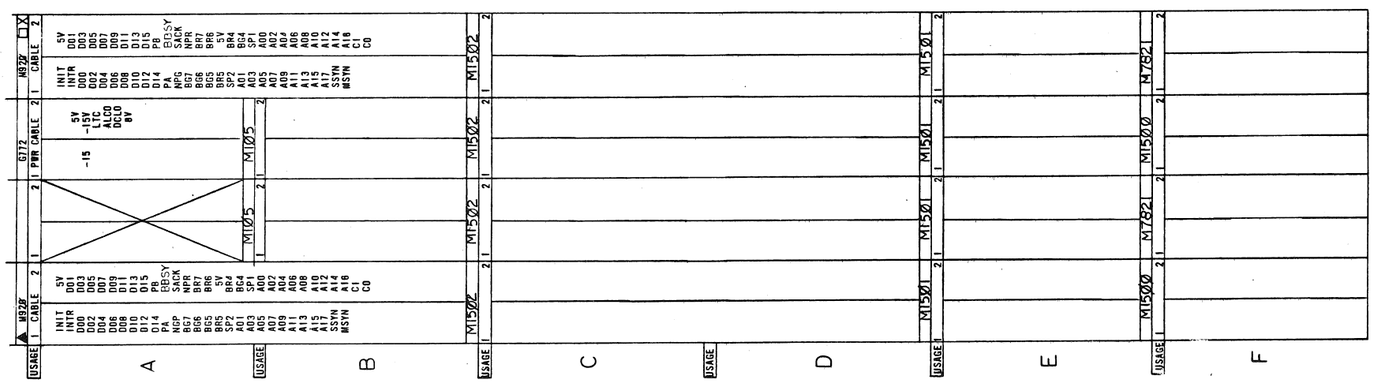

QTY.	DESCRIPTION	PART NO.	ITEM NO.

PARTS LIST

FIRST USED ON OPTION/MODEL: PDP11

DO NOT SCALE DRAWING

UNLESS OTHERWISE SPECIFIED
DIMENSION IN INCHES
TOLERANCES
DECIMALS ± .005 FRACTIONS ± 1/64 ANGLES ± 0°30'
FINAL SURFACE QUALITY
REMOVE BURRS AND BREAK SHARP CORNERS

MATERIAL —//—

FINISH —//—

		DATE
DRN		9/26/72
CHK'D		9/27/72
ENG		9/27/72
PROJ ENG		9/27/72
PROD		9/27/72

NEXT HIGHER ASSY: B-DD-BB11-H

SCALE: NONE

SHEET 1 OF 2

DIGITAL EQUIPMENT CORPORATION MAYNARD MASSACHUSETTS

TITLE: MODULE UTILIZATION

SIZE	CODE	NUMBER	REV.
C	MU	BB11-H-1	

DIST.

REVISIONS: REV. / CHANGE NO. / CHK

DEC FORM NO DRD 100

SIZE	CODE	NUMBER	REV.
C	MU	BB11-H-1	

NOTE:
BUS GRANT LINES 5 AND 6 ARE PREWIRED ON BACK PANEL. REFER TO APPLICATION NOTES AND ENGINEERING SPECS. TO ALTER.

SYMBOLS:
IN = INSTALL MODULE
X = DO NOT INSTALL
N/A = NOT AVAILABLE
A, B, C } REFER TO LETTERED COLUMN INDICATED TO DETERMINE PROPER UTILIZATION.
* FURTHER INTERRUPT INFORMATION PROVIDED IN APPLICATION NOTES AND ENG. SPECS.

WORDS IN (S) (A)	WORDS OUT (S) (B)	INTERRUPT(S) INPUT* WORD ONLY (C)	INTERRUPT(S) OUTPUT WORD (D)	B02 M105	B03 M105_	C01 M150_ D01 M150_ (M1502)	C02 M150_ D02 M150_ (M1502)	C03 M150_ D03 M150_ (M1502)	C04 M150_ D04 M150_ (M1502)	E01 M1501	E02 M1501	E03 M1501	E04 M1501	F01 M1500	F02 M7821	F03 M1500	F04 M7821
0			N	X	B	B	B	B	B	X	X	X	X	X	X	X	X
1			O	IN	B	B	B	B	B	IN	X	X	X	C	C	X	X
2			T	IN	B	B	B	B	B	IN	IN	X	X	C	C	X	X
3				IN	B	B	B	B	B	IN	IN	IN	X	C	C	C	C
4			A	IN	B	B	B	B	B	IN	IN	IN	IN	C	C	C	C
	↓		V														
	0		A	A	X	X	X	X	X	A	A	A	A	A	A	A	A
	1		I	A	IN	IN	X	X	X	A	A	A	A	A	A	A	A
	2		L	A	IN	IN	IN	X	X	A	A	A	A	A	A	A	A
	3		A	A	IN	IN	IN	IN	X	A	A	A	A	A	A	A	A
	4		B	A	IN	IN	IN	IN	IN	A	A	A	A	A	A	A	A
		↓	L														
		0	E	A	B	B	B	B	B	A	A	A	A	X	X	X	X
		1		IN	B	B	B	B	B	IN	X	X	X	IN	IN	X	X
		2	B	IN	B	B	B	B	B	IN	IN	X	X	IN	IN	X	X
		3	B 1	IN	B	B	B	B	B	IN	IN	IN	X	IN	IN	IN	IN
		4	1 H	IN	B	B	B	B	B	IN	IN	IN	IN	IN	IN	IN	IN
			0	N/A	N/A	N/A	N/A	N/A	N/A	N/A	N/A	N/A	N/A	N/A	N/A	N/A	N/A
			1	N/A	N/A	N/A	N/A	N/A	N/A	N/A	N/A	N/A	N/A	N/A	N/A	N/A	N/A
			2	N/A	N/A	N/A	N/A	N/A	N/A	N/A	N/A	N/A	N/A	N/A	N/A	N/A	N/A
			3	N/A	N/A	N/A	N/A	N/A	N/A	N/A	N/A	N/A	N/A	N/A	N/A	N/A	N/A
			4	N/A	N/A	N/A	N/A	N/A	N/A	N/A	N/A	N/A	N/A	N/A	N/A	N/A	N/A

FIRST USED ON OPT/MOD: PDP11

QTY | REF DESIGNATION | DESCRIPTION | PART NO. | ITEM NO.

PARTS LIST

ETCH BOARD REV

EQUIPMENT CORPORATION

TITLE: MODULE UTILIZATION

SEMICONDUCTOR CONVERSION CHART

C MU BB11-H-1

This drawing and specifications, herein, are the property of Digital Equipment Corporation and shall not be reproduced or copied or used in whole or in part as the basis for the manufacture or sale of items without written permission.

		BC11-A or M920 AØ1	BC11-A** or M920 AØ4
BUS	INIT L	A1	A1
	POWER (+5)*	A2	A2
BUS	INTR L	B1	B1
BUS	GROUND	B2	B2
BUS	DØØ L	C1	C1
BUS	GROUND	C2	C2
BUS	DØ2 L	D1	D1
BUS	DØ1 L	D2	D2
BUS	DØ4 L	E1	E1
BUS	DØ3 L	E2	E2
BUS	DØ6 L	F1	F1
BUS	DØ5 L	F2	F2
BUS	DØ8 L	H1	H1
BUS	DØ7 L	H2	H2
BUS	DIØ L	J1	J1
BUS	DØ9 L	J2	J2
BUS	DI2 L	K1	K1
BUS	DI1 L	K2	K2
BUS	DI4 L	L1	L1
BUS	DI3 L	L2	L2
BUS	DA L	M1	M1
BUS	DI5 L	M2	M2
BUS	GROUND	N1	N1
BUS	PB L	N2	N2
BUS	GROUND	P1	P1
BUS	BASY L	P2	P2
BUS	GROUND	R1	R1
BUS	SACK L	R2	R2
BUS	GROUND	S1	S1
BUS	NPR L	S2	S2
BUS	GROUND	T1	T1
BUS	BR7 L	T2	T2
BUS	NPG H	U1	U1
BUS	BR6 L	U2	U2
BUS	BG7 IN H	V1	V1
BUS	GROUND	V2	V2

		BC11-A or M920 BØ1	BC11-A** or M920 BØ4	
BUS	BG6 IN H	A1	A1	BUS BG6 OUT H
	POWER (+5)*	A2	A2	
BUS	BG5 IN H	B1	B1	BUS BG5 OUT H
BUS	GROUND	B2	B2	
BUS	BR5 L	C1	C1	
BUS	GROUND	C2	C2	
BUS	GROUND	D1	D1	
BUS	BR4 L	D2	D2	
BUS	GROUND	E1	E1	
BUS	BG4 IN H	E2	E2	
BUS	ACLO L	F1	F1	
BUS	DCLO L	F2	F2	
BUS	AØ1 L	H1	H1	
BUS	AØØ L	H2	H2	
BUS	AØ3 L	J1	J1	
BUS	AØ2 L	J2	J2	
BUS	AØ5 L	K1	K1	
BUS	AØ4 L	K2	K2	
BUS	AØ7 L	L1	L1	
BUS	AØ6 L	L2	L2	
BUS	AØ9 L	M1	M1	
BUS	AØ8 L	M2	M2	
BUS	A11 L	N1	N1	
BUS	AIØ L	N2	N2	
BUS	A13 L	P1	P1	
BUS	A12 L	P2	P2	
BUS	A15 L	R1	R1	
BUS	A14 L	R2	R2	
BUS	A17 L	S1	S1	
BUS	A16 L	S2	S2	
BUS	GROUND	T1	T1	
BUS	C1 L	T2	T2	
BUS	SSYN L	U1	U1	
BUS	CØ L	U2	U2	
BUS	MSYN L	V1	V1	
BUS	GROUND	V2	V2	

	G772 AØ3	
-15V	A1	
+5V	A2	
-15V	B1	
-15V	B2	
-15V	C1	
GROUND	C2	
-15V	D1	
GROUND	D2	
-15V	E1	
GROUND	E2	
-15V	F1	
GROUND	F2	
-15V	H1	
+5V	H2	
-15V	J1	
+5V	J2	
-15V	K1	
+5V	K2	
-15V	L1	
+5V	L2	
-15V	M1	
+5V	M2	
GROUND	N1	
-25V	N2	NC
GROUND	P1	
LTC L	P2	NC
GROUND	R1	
ACLO L	R2	NC
GROUND	S1	
DCLO L	S2	NC
GROUND	T1	
+8V	T2	NC
GROUND	U1	
+8V	U2	NC
GROUND	V1	
+8V	V2	NC

E&F Slots

D Slots

B&C Slots

all grounds joined

Connections on back plane.

NOTE:

* +5V IS WIRED TO THESE PINS TO SUPPLY POWER TO THE BUS TERMINATOR ONLY. +5 SHOULD NEVER BE CONNECTED VIA THE UNIBUS BETWEEN SYSTEM UNITS

** IF THIS IS THE LAST UNIT ON THE UNIBUS AN M930 BUS TERMINATOR MUST BE PLACED IN SLOTS A24 AND B04

REVISIONS			
CHK	CHANGE NO.	REV	
B.F.	BB11H-00002	A	
	B.FITCH 7-25-73		

FIRST USED ON OPTION/MODEL	QTY.	DESCRIPTION	PART NO.	ITEM NO.
PDP 11		PARTS LIST		

UNLESS OTHERWISE SPECIFIED DIMENSION IN INCHES TOLERANCES
DECIMALS .XXX = .005 .XX = .02 .X = .1
ANGLES ±0° 30'
REMOVE BURRS AND BREAK SHARP CORNERS SURFACE QUALITY

MATERIAL —"—

FINISH —"—

DRN. DATE
CHK'D. DATE
ENG. 7/20/73
PROJ. ENG. DATE
PROD. 7-21-73

NEXT HIGHER ASSY. B-DD-BB11-H
SCALE —"—
SHEET 1 OF 2

DIGITAL EQUIPMENT CORPORATION MAYNARD MASSACHUSETTS

TITLE CONNECTION (UNIBUS) (BB11-H)

SIZE	CODE	NUMBER	REV.
C	IC	BB11-H-2	A

DIST.

C FORM NO. RD 102-B

10

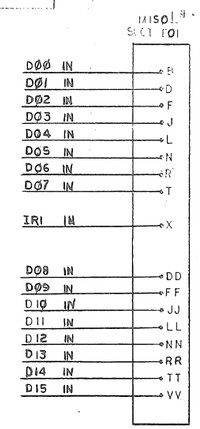

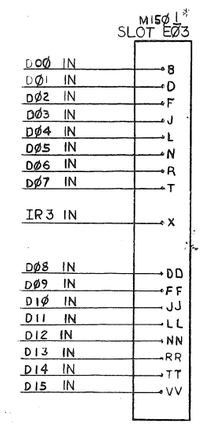

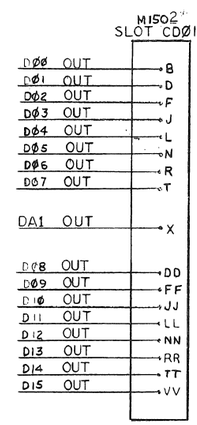

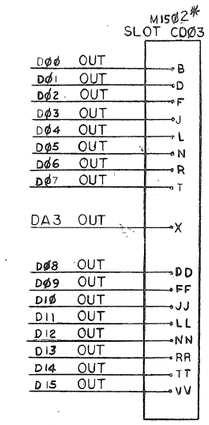

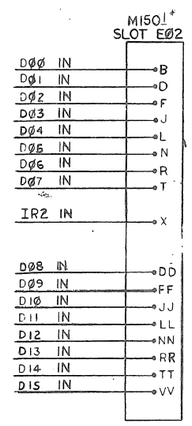

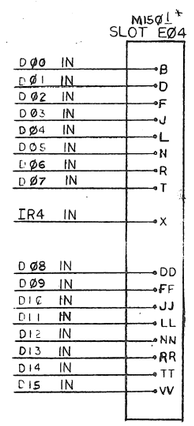

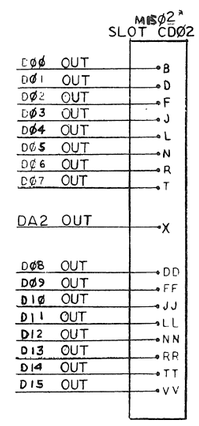

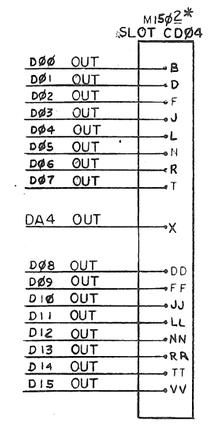

NOTE: * INDICATES THE TYPE MODULE AND RACK LOCATION UTILIZING THE H854 CONNECTOR DRAWN.

FIRST USED ON ASSY/ OPT
PDP11

QTY	REF DESIGNATION	DESCRIPTION	PART NO.	ITEM NO.

PARTS LIST

ETCH BOARD REV

REV	CHANGE NO.	REVISIONS	CHK

DEC NO.	EIA NO.	DEC NO.	EIA NO.

SEMICONDUCTOR CONVERSION CHART

DRN. [illegible] DATE 7/24/72
CHK'D [illegible] DATE 9/26/72
ENG. [illegible] DATE 9/28/72
PROJ. ENG. [illegible] DATE 9/28/72
PROD. [illegible] DATE 9-29-72
NEXT HIGHER ASSY B-DD-BB11-H
SCALE
SHEET 2 OF 2

digital EQUIPMENT CORPORATION MAYNARD, MASSACHUSETTS

TITLE CONNECTION (I/O CABLE) (BB11-H)

SIZE	CODE	NUMBER	REV.
C	IC	BB11-H-2	A

DIST.

DEC FORM NO DRD-E55

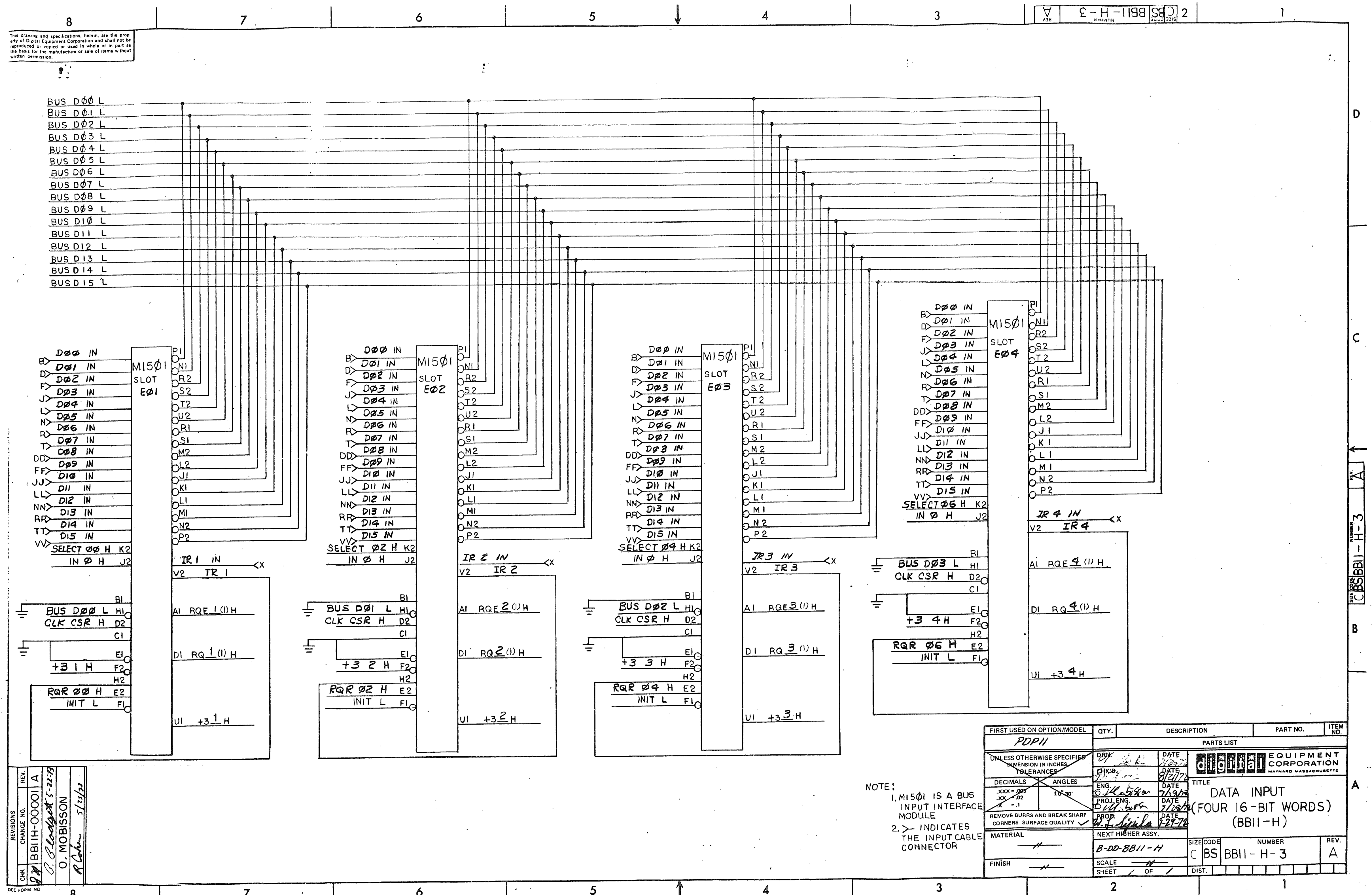

This drawing and specifications, herein, are the property of Digital Equipment Corporation and shall not be reproduced or copied or used in whole or in part as the basis for the manufacture or sale of items without written permission.

REVISIONS: BB11H-00001 A — O. MOBISSON

NOTE:
1. M15Ø1 IS A BUS INPUT INTERFACE MODULE
2. >- INDICATES THE INPUT CABLE CONNECTOR

FIRST USED ON OPTION/MODEL: PDP11

UNLESS OTHERWISE SPECIFIED DIMENSION IN INCHES TOLERANCES

NEXT HIGHER ASSY.: B-DD-BB11-H

digital EQUIPMENT CORPORATION, MAYNARD MASSACHUSETTS

TITLE: DATA INPUT (FOUR 16-BIT WORDS) (BB11-H)

SIZE C — CODE BS — NUMBER BB11-H-3 — REV. A

SHEET 1 OF 1

12

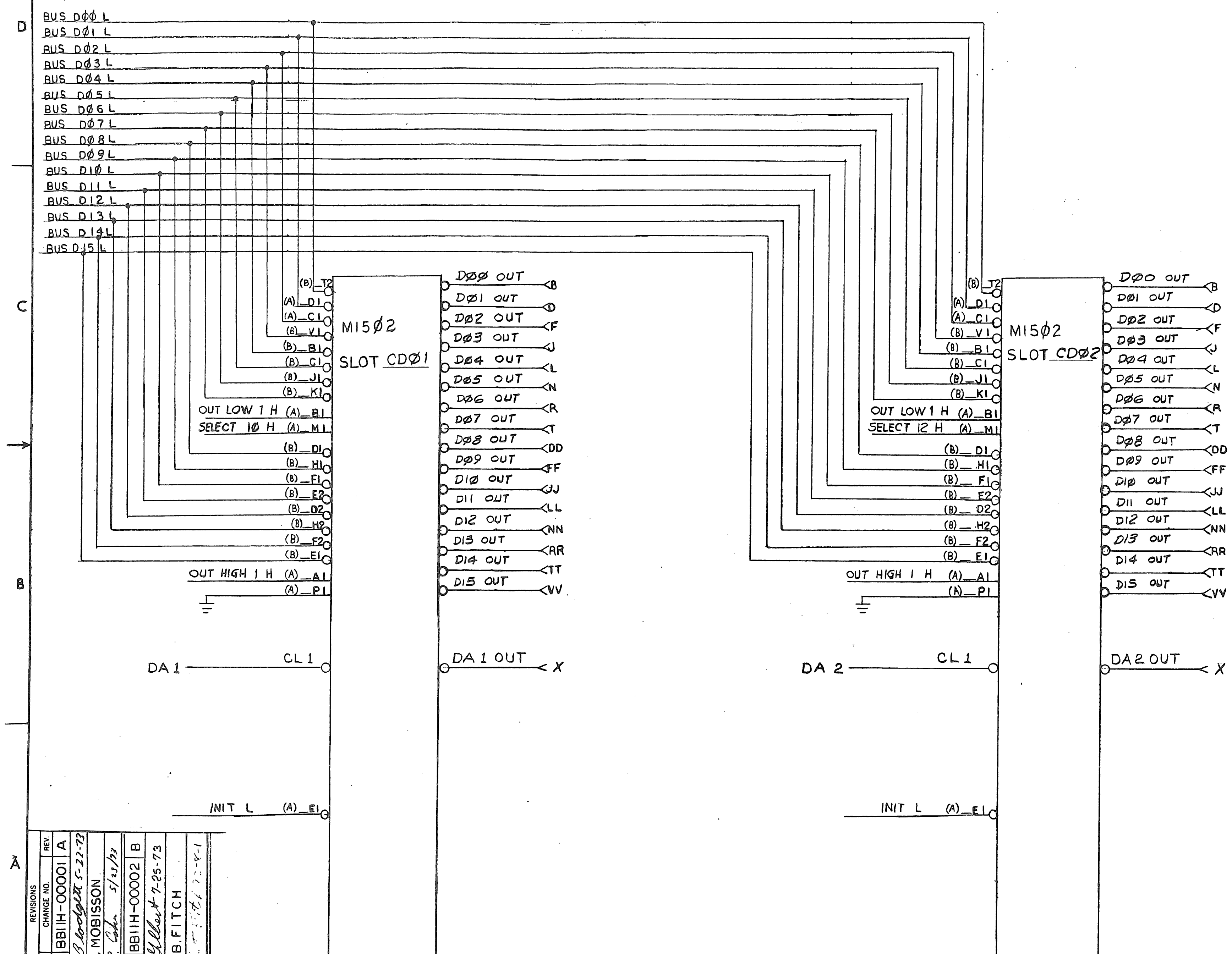

NOTE:
1. M15Ø2 IS A BUS OUTPUT INTERFACE
2. < INDICATES THE OUTPUT CABLE CONNECTOR

This drawing and specifications, herein, are the property of Digital Equipment Corporation and shall not be reproduced or copied or used in whole or in part as the basis for the manufacture or sale of items without written permission.

REVISIONS CHANGE NO.	REV.	CHK.
BB11H-00001	A	O. MOBISSON
BB11H-00002	B	B. FITCH

FIRST USED ON OPTION/MODEL: PDP 11

UNLESS OTHERWISE SPECIFIED DIMENSION IN INCHES. TOLERANCES
DECIMALS .XXX = .005 .XX = .02 — ANGLES ±0° 30'
REMOVE BURRS AND BREAK SHARP CORNERS SURFACE QUALITY

digital EQUIPMENT CORPORATION MAYNARD MASSACHUSETTS

TITLE: DATA OUT (10 AND 12) (TWO 16-BIT WORDS) (BB11-H)

NEXT HIGHER ASSY.: B-DD-BB11-H

SIZE C CODE BS NUMBER BB11-H-4 REV. B

SHEET 1 OF 2

13

This drawing and specifications, herein, are the property of Digital Equipment Corporation and shall not be reproduced or copied or used in whole or in part as the basis for the manufacture or sale of items without written permission.

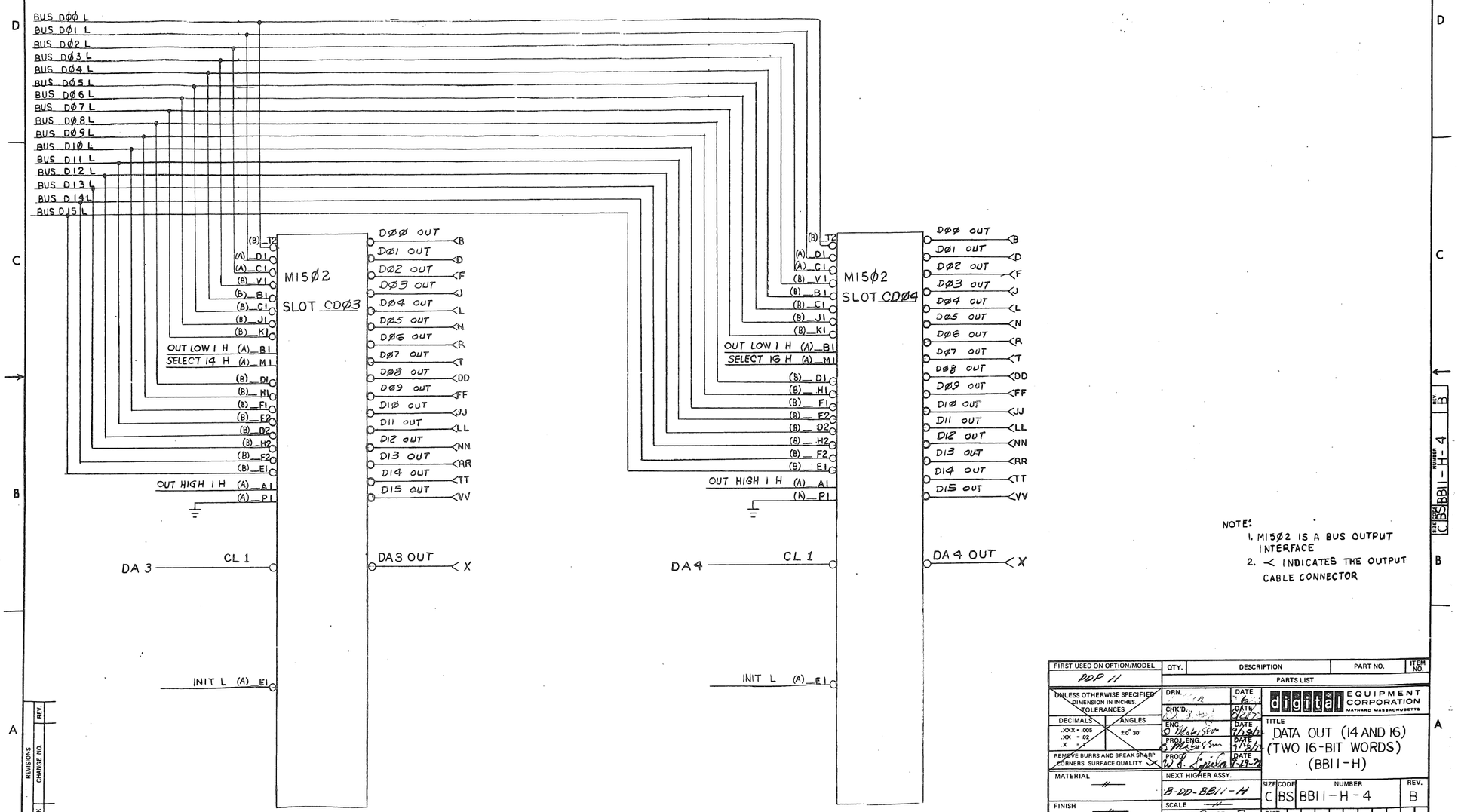

NOTE:
1. M15Ø2 IS A BUS OUTPUT INTERFACE
2. ≺ INDICATES THE OUTPUT CABLE CONNECTOR

FIRST USED ON OPTION/MODEL	QTY.	DESCRIPTION	PART NO.	ITEM NO.
PDP 11		PARTS LIST		

UNLESS OTHERWISE SPECIFIED DIMENSION IN INCHES. TOLERANCES
DECIMALS .XXX = .005 .XX = .02 .X = .1 ANGLES ±0° 30'
REMOVE BURRS AND BREAK SHARP CORNERS SURFACE QUALITY
MATERIAL —
FINISH —

DRN. DATE
CHK'D. DATE
ENG. DATE
PROD ENG. DATE
PROD DATE

digital EQUIPMENT CORPORATION MAYNARD MASSACHUSETTS

TITLE DATA OUT (14 AND 16) (TWO 16-BIT WORDS) (BB11-H)

NEXT HIGHER ASSY. B-DD-BB11-H
SCALE —
SHEET 2 OF 2
DIST.

SIZE	CODE	NUMBER	REV.
C	BS	BB11-H-4	B

REVISIONS | REV. | CHANGE NO. | CHK

DEC FORM NO DRD 102-B

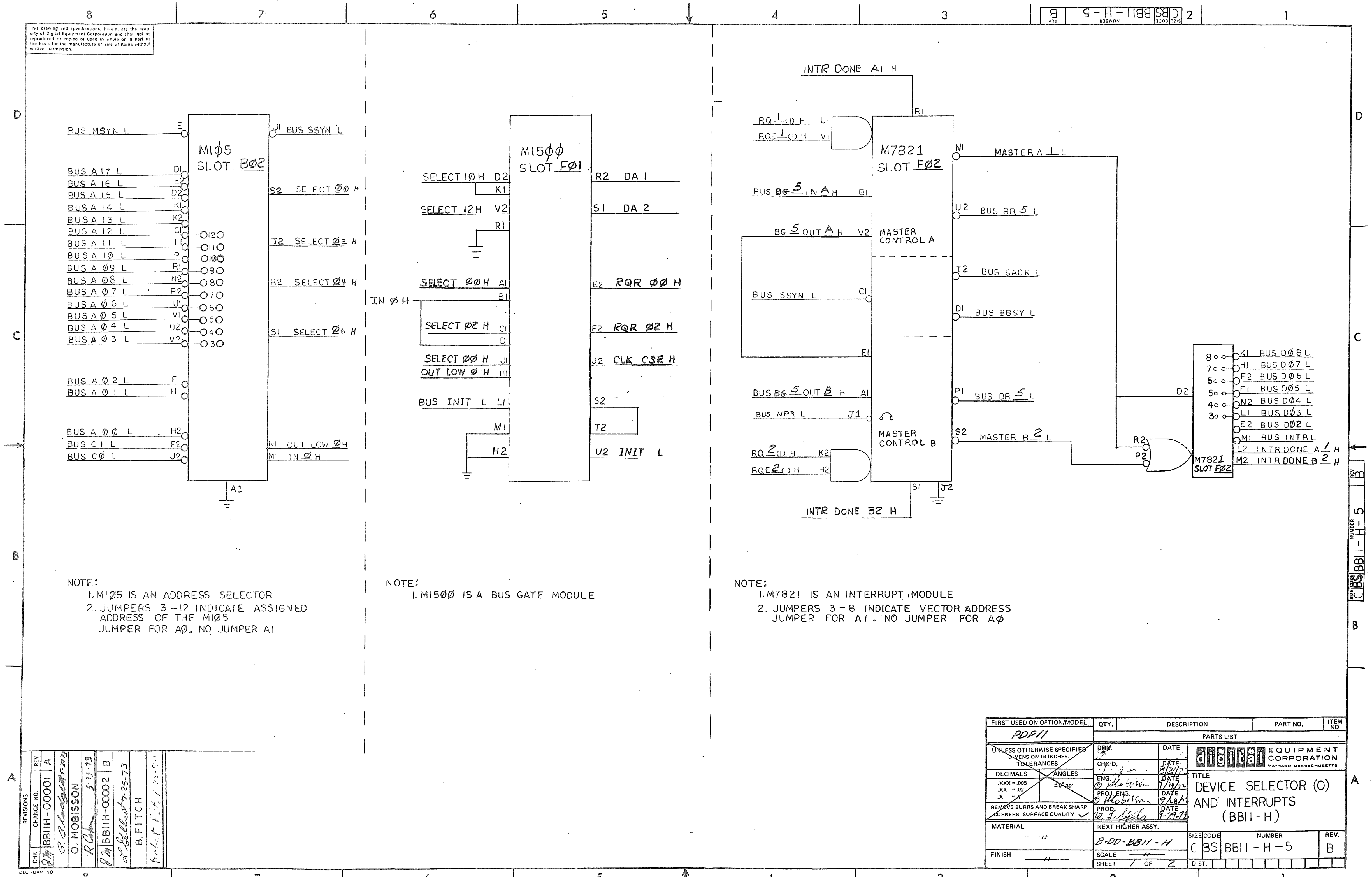
M1Ø5
SLOT BØ2
BUS MSYN L
BUS SSYN L
SELECT ØØ H
SELECT Ø2 H
SELECT Ø4 H
SELECT Ø6 H
OUT LOW Ø H
IN Ø H
M15ØØ
SLOT FØ1
SELECT 1Ø H
SELECT 12H
DA 1
DA 2
RQR ØØ H
RQR Ø2 H
CLK CSR H
BUS INIT L
INIT L
INTR DONE A1 H
INTR DONE B2 H
M7821
SLOT FØ2
MASTER CONTROL A
MASTER CONTROL B
MASTER A 1 L
MASTER B 2 L
BUS BR 5 L
BUS SACK L
BUS BBSY L
BUS SSYN L
BUS NPR L
INTR DONE A 1 H
INTR DONE B 2 H
BUS INTR L
NOTE:
1. M1Ø5 IS AN ADDRESS SELECTOR
2. JUMPERS 3-12 INDICATE ASSIGNED ADDRESS OF THE M1Ø5 JUMPER FOR AØ, NO JUMPER A1
NOTE:
1. M15ØØ IS A BUS GATE MODULE
NOTE:
1. M7821 IS AN INTERRUPT MODULE
2. JUMPERS 3-8 INDICATE VECTOR ADDRESS JUMPER FOR A1. NO JUMPER FOR AØ
FIRST USED ON OPTION/MODEL: PDP11
DIGITAL EQUIPMENT CORPORATION MAYNARD MASSACHUSETTS
TITLE: DEVICE SELECTOR (O) AND INTERRUPTS (BB11-H)
NEXT HIGHER ASSY. B-DD-BB11-H
SIZE C CODE BS NUMBER BB11-H-5 REV. B
SHEET 1 OF 2
REVISIONS: BB11H-00001 A; BB11H-00002 B
O. MOBISSON
B. FITCH

This drawing and specifications, herein, are the property of Digital Equipment Corporation and shall not be reproduced or copied or used in whole or in part as the basis for the manufacture or sale of items without written permission.

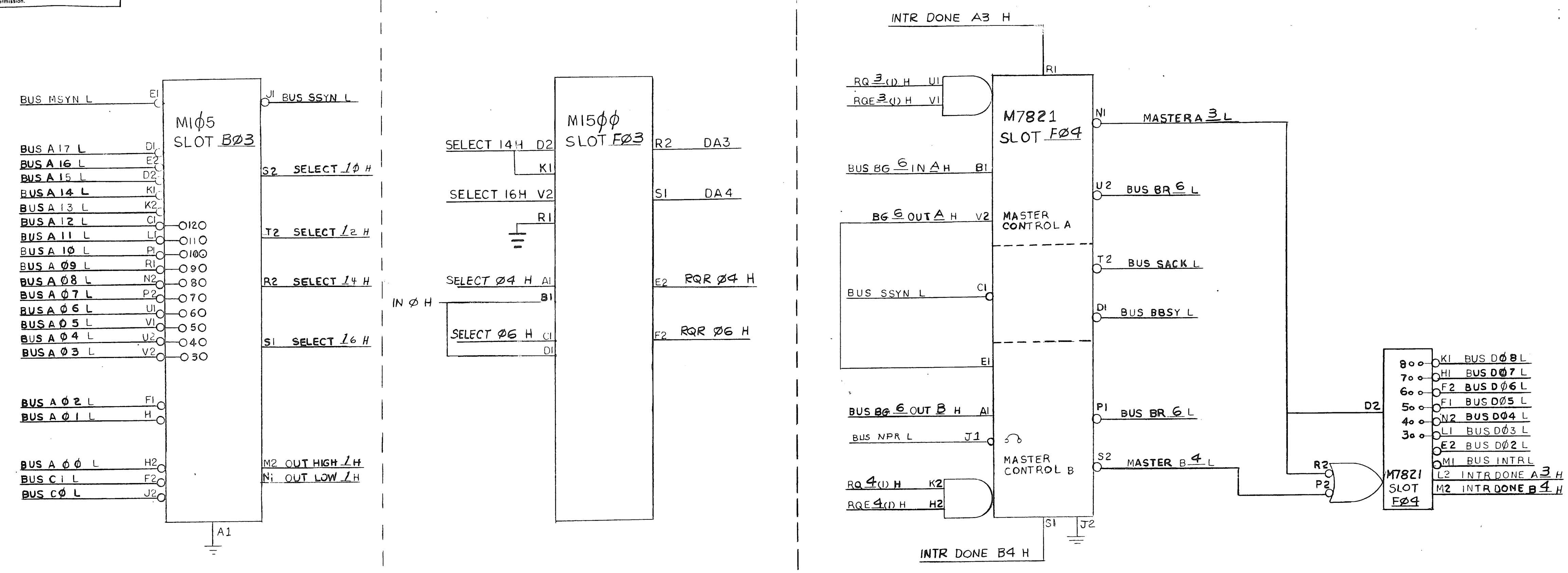

NOTE:
1. M1Ø5 IS AN ADDRESS SELECTOR
2. JUMPERS 3 – 12 INDICATE ASSIGNED ADDRESS OF THE M1Ø5 JUMPEP FOR AØ. NO JUMPER FOR A1

NOTE:
1. M15ØØ IS A BUS MODULE

NOTE:
1. M7821 IS AN INTERRUPT MODULE
2. JUMPERS 3 – 8 INDICATE VECTOR ADDRESS JUMPER FOR A1. NO JUMPER FOR AØ

FIRST USED ON OPTION/MODEL	QTY.	DESCRIPTION	PART NO.	ITEM NO.
PDP 11		PARTS LIST		

UNLESS OTHERWISE SPECIFIED DIMENSION IN INCHES TOLERANCES: DECIMALS .XXX ± .005, .XX ± .02, .X ± .1; ANGLES ±0° 30'

REMOVE BURRS AND BREAK SHARP CORNERS SURFACE QUALITY

MATERIAL —

FINISH —

DIGITAL EQUIPMENT CORPORATION, MAYNARD MASSACHUSETTS

TITLE: DEVICE SELECTOR (1) AND INTERRUPTS (BB11-H)

NEXT HIGHER ASSY. 8-DD-BB11-H

SIZE C | CODE BS | NUMBER BB11-H-5 | REV. B

SCALE — SHEET 2 OF 2

16

This drawing and specifications, herein, are the property of Digital Equipment Corporation and shall not be reproduced or copied or used in whole or in part as the basis for the manufacture or sale of items without written permission.

FIRST USED ON OPTION MODEL	QTY.	DESCRIPTION	PART NO.	ITEM NO.
PDP 11		PARTS LIST		

REVISIONS			
CHK	CHANGE NO.	REV.	
	BB11H-00001	A	B. Blodgett 5-22-73
			O. MOBISSON 5-23-73
	BB11H-00002	B	7-25-73
			B. FITCH

DRN.		DATE	8-3-72
CHK'D.		DATE	
ENG.		DATE	9/18/72
PROJ. ENG.		DATE	9/18/72
PROD.		DATE	9-27-72
NEXT HIGHER ASSEMBLY	B-DD-BB11-H		
SCALE	—		
SHEET	1 OF 1		

digital EQUIPMENT CORPORATION
MAYNARD, MASSACHUSETTS

TITLE

WIRE LIST (BB11-H)

SIZE	CODE	NUMBER	REV.
K	WL	BB11-H-6	B

DIST.

DEC FORM NO. DRB 109

RUN NAME	A/P	PIN NAME	ORDER PIN	BAY - ORDER	Q	DRAW RV PG Y	X	Z	REMARKS	LENGTH	EXCEPTIONS	RUN NUMBER
+3 1	H	E01F2		1-01 *		BB11H-4		1				1
+3 1	H	E01U1		1-02 *		BB11H-4						1
+3 1				1						4-6/8		1
+3 2	H	E02F2		1-01 *		BB11H-4		1				2
+3 2	H	E02U1		1-02 *		BB11H-4						2
+3 2				1						4-6/8		2
+3 3	H	E03F2		1-01 *		BB11H-4		1				3
+3 3	H	E03U1		1-02 *		BB11H-4						3
+3 3				1						4-6/8		3
+3 4	H	E04F2		1-01 *		BB11H-4		1				4
+3 4	H	E04U1		1-02 *		BB11H-4						4
+3 4				1						4-6/8		4
BG5 OUT A	H	F02E1		1-01 *		BB11H-5		1				5
BG5 OUT A	H	F02V2		1-02 *		BB11H-5						5
BG5 OUT A				1						5-0/8		5
BG6 OUT A	H	F04E1		1-01 *		BB11H-6		1				6
BG6 OUT A	H	F04V2		1-02 *		BB11H-6						6
BG6 OUT A				1						5-0/8		6
BUS A00	L	B01H2		1-01 *	C	BB11H-1		1			CABLE	7
BUS A00	L	B04H2		1-02 *	C	BB11H-1		2			CABLE	7
BUS A00	L	B03H2		1-03 *		BB11H-6		1				7
BUS A00	L	B02H2		1-04 *		BB11H-5					TERM HERE?	7
BUS A00				1						11-4/8		7
BUS A01	L	B01H1		1-01 *	C	BB11H-1		1			CABLE	8
BUS A01	L	B04H1		1-02 *	C	BB11H-1		2			CABLE	8
BUS A01	L	B03H1		1-03 *		BB11H-6		1				8
BUS A01	L	B02H1		1-04 *		BB11H-5					TERM HERE?	8
BUS A01				1						11-4/8		8
BUS A02	L	B03F1		1-01 *		BB11H-6		2			TERM HERE?	9
BUS A02	L	B02F1		1-02 *		BB11H-5		1				9
BUS A02	L	B01J2		1-03 *	C	BB11H-1		2			CABLE	9
BUS A02	L	B04J2		1-04 *	C	BB11H-1					CABLE	9
BUS A02				1						10-6/8		9
BUS A03	L	B01J1		1-01 *	C	BB11H-1		2			CABLE	10
BUS A03	L	B04J1		1-02 *	C	BB11H-1		1			CABLE	10
BUS A03	L	B03V2		1-03 *		BB11H-6		2				10
BUS A03	L	B02V2		1-04 *		BB11H-5					TERM HERE?	10
BUS A03				1						12-4/8		10

RUN NAME	A/P	PIN NAME	ORDER PIN	BAY - ORDER	Q	DRAW RV PG Y	X	Z	REMARKS	LENGTH	EXCEPTIONS	RUN NUMBER
BUS A04	L	B01K2		1-01 *	C	BB11H-1		2			CABLE	11
BUS A04	L	B04K2		1-02 *	C	BB11H-1		1			CABLE	11
BUS A04	L	B03U2		1-03 *		BB11H-6		2				11
BUS A04	L	B02U2		1-04 *		BB11H-5					TERM HERE?	11
BUS A04				1						12-4/8		11
BUS A05	L	B01K1		1-01 *	C	BB11H-1		2			CABLE	12
BUS A05	L	B04K1		1-02 *	C	BB11H-1		1			CABLE	12
BUS A05	L	B02V1		1-03 *		BB11H-5		2				12
BUS A05	L	B03V1		1-04 *		BB11H-6					TERM HERE?	12
BUS A05				1						12-3/8		12
BUS A06	L	B03U1		1-01 *		BB11H-6		2			TERM HERE?	13
BUS A06	L	B02U1		1-02 *		BB11H-5		1				13
BUS A06	L	B01L2		1-03 *	C	BB11H-1		2			CABLE	13
BUS A06	L	B04L2		1-04 *	C	BB11H-1					CABLE	13
BUS A06				1						12-0/8		13
BUS A07	L	B01L1		1-01 *		BB11H-1		1				14
BUS A07	L	B02P2		1-02 *		BB11H-5		2				14
BUS A07	L	B03P2		1-03 *		BB11H-6		1				14
BUS A07	L	B04L1		1-04 *		BB11H-1						14
BUS A07				1						10-1/8		14
BUS A08	L	B01M2		1-01 *	C	BB11H-1		2			CABLE	15
BUS A08	L	B04M2		1-02 *	C	BB11H-1		1			CABLE	15
BUS A08	L	B03N2		1-03 *		BB11H-6		2				15
BUS A08	L	B02N2		1-04 *		BB11H-5					TERM HERE?	15
BUS A08				1						10-7/8		15
BUS A09	L	B01M1		1-01 *	C	BB11H-1		2			CABLE	16
BUS A09	L	B04M1		1-02 *	C	BB11H-1		1			CABLE	16
BUS A09	L	B03R1		1-03 *		BB11H-6		2				16
BUS A09	L	B02R1		1-04 *		BB11H-5					TERM HERE?	16
BUS A09				1						10-7/8		16
BUS A10	L	B03P1		1-01 *		BB11H-6		2			TERM HERE?	17
BUS A10	L	B02P1		1-02 *		BB11H-5		1				17
BUS A10	L	B01N2		1-03 *	C	BB11H-1		2			CABLE	17
BUS A10	L	B04N2		1-04 *	C	BB11H-1					CABLE	17
BUS A10				1						10-3/8		17
BUS A11	L	B01N1		1-01 *	C	BB11H-1		1			CABLE	18
BUS A11	L	B04N1		1-02 *	C	BB11H-1		2			CABLE	18
BUS A11	L	B03L1		1-03 *		BB11H-6		1				18
BUS A11	L	B02L1		1-04 *		BB11H-5					TERM HERE?	18
BUS A11				1						11-4/8		18

RUN NAME	A/P	PIN NAME	ORDER PIN	BAY - ORDER	Q	DRAW RV PG Y	X	Z	REMARKS	LENGTH	EXCEPTIONS	RUN NUMBER
BUS A12	L	B03C1		1-01 *		BB11H-6		2			TERM HERE?	19
BUS A12	L	B02C1		1-02 *		BB11H-5		1				19
BUS A12	L	B01P2		1-03 *	C	BB11H-1		2			CABLE	19
BUS A12	L	B04P2		1-04 *	C	BB11H-1					CABLE	19
BUS A12				1						12-4/8		19
BUS A13	L	B01P1		1-01 *	C	BB11H-1		1			CABLE	20
BUS A13	L	B04P1		1-02 *	C	BB11H-1		2			CABLE	20
BUS A13	L	B03K2		1-03 *		BB11H-6		1				20
BUS A13	L	B02K2		1-04 *		BB11H-5					TERM HERE?	20
BUS A13				1						11-4/8		20
BUS A14	L	B03K1		1-01 *		BB11H-5		1			TERM HERE?	21
BUS A14	L	B02K1		1-02 *		BB11H-5		2				21
BUS A14	L	B01R2		1-03 *	C	BB11H-1		1			CABLE	21
BUS A14	L	B04R2		1-04 *	C	BB11H-1					CABLE	21
BUS A14				1						11-6/8		21
BUS A15	L	B01R1		1-01 *	C	BB11H-1		2			CABLE	22
BUS A15	L	B04R1		1-02 *	C	BB11H-1		1			CABLE	22
BUS A15	L	B03D2		1-03 *		BB11H-6		2				22
BUS A15	L	B02D2		1-04 *		BB11H-5					TERM HERE?	22
BUS A15				1						12-4/8		22
BUS A16	L	B01S2		1-01 *	C	BB11H-1		1			CABLE	23
BUS A16	L	B04S2		1-02 *	C	BB11H-1		2			CABLE	23
BUS A16	L	B02E2		1-03 *		BB11H-5		1				23
BUS A16	L	B03E2		1-04 *		BB11H-6					TERM HERE?	23
BUS A16				1						12-5/8		23
BUS A17	L	B01S1		1-01 *	C	BB11H-1		2			CABLE	24
BUS A17	L	B04S1		1-02 *	C	BB11H-1		1			CABLE	24
BUS A17	L	B03D1		1-03 *		BB11H-6		2				24
BUS A17	L	B02D1		1-04 *		BB11H-5					TERM HERE?	24
BUS A17				1						12-6/8		24
BUS ACLO	L	B01F1		1-01 *	C	BB11H-1		1			CABLE	25
BUS ACLO	L	B04F1		1-02 *	C	BB11H-1					CABLE	25
BUS ACLO				1						4-4/8		25
BUS BBSY	L	A01P2	✓	1-01 *	C	BB11H-1		2			CABLE	26
BUS BBSY	L	A04P2	✓	1-02 *	C	BB11H-1		1			CABLE	26
BUS BBSY	L	F04D1	✓	1-03 *		BB11H-6		2				26
BUS BBSY	L	F02D1	✓	1-04 *		BB11H-5					TERM HERE?	26
BUS BBSY				1						23-6/8		26

RUN NAME	A/P	PIN NAME	ORDER PIN	BAY - ORDER	Q	DRAW RV PG Y	X	Z	REMARKS	LENGTH	EXCEPTIONS	RUN NUMBER
BUS BG4 IN	H	B01E2	✓	1-01 *	C	BB11H-1		1			CABLE	27
BUS BG4 IN	H	B04E2		1-02 *	C	BB11H-1					CABLE	27
BUS BG4 IN				1						4-4/8		27
BUS BG5 IN A	H	B01B1	✓	1-01 *	C	BB11H-1		1			CABLE	28
BUS BG5 IN A	H	F02B1	✓	1-02 *		BB11H-5					TERM HERE?	28
BUS BG5 IN A				1						14-0/8		28
BUS BG5 OUT B	H	B04B1	✓	1-01 *	C	BB11H-1		1			CABLE	29
BUS BG5 OUT B	H	F02A1	✓	1-02 *		BB11H-5					TERM HERE?	29
BUS BG5 OUT B				1						14-4/8		29
BUS BG6 IN A	H	B01A1		1-01 *	C	BB11H-1		1			CABLE	30
BUS BG6 IN A	H	F04B1		1-02 *		BB11H-6					TERM HERE?	30
BUS BG6 IN A				1						15-2/8		30
BUS BG6 OUT B	H	B04A1		1-01 *	C	BB11H-1		1			CABLE	31
BUS BG6 OUT B	H	F04A1		1-02 *		BB11H-6					TERM HERE?	31
BUS BG6 OUT B				1						13-4/8		31
BUS BG7 IN	H	A01V1	✓	1-01 *	C	BB11H-1		1			CABLE	32
BUS BG7 IN	H	A04V1	✓	1-02 *	C	BB11H-1					CABLE	32
BUS BG7 IN				1						4-4/8		32
BUS BR4	L	B01D2	✓	1-01 *	C	BB11H-1		1			CABLE	33
BUS BR4	L	B04D2	✓	1-02 *	C	BB11H-1					CABLE	33
BUS BR4				1						4-4/8		33
BUS BR5	L	B04C1	✓	1-01 *	C	BB11H-1		2			CABLE	34
BUS BR5	L	B01C1	✓	1-02 *	C	BB11H-1		1			CABLE	34
BUS BR5	L	F02P1	✓	1-03 *		BB11H-5		2				34
BUS BR5	L	F02U2	✓	1-04 *		BB11H-5					TERM HERE?	34
BUS BR5				1						23-2/8		34
BUS BR6	L	A01U2	✓	1-01 *	C	BB11H-1		2			CABLE	35
BUS BR6	L	A04U2	✓	1-02 *	C	BB11H-1		1			CABLE	35
BUS BR6	L	F04P1	✓	1-03 *		BB11H-6		2				35
BUS BR6	L	F04U2	✓	1-04 *		BB11H-6					TERM HERE?	35
BUS BR6				1						24-0/8		35
BUS BR7	L	A01T2	✓	1-01 *	C	BB11H-1		1			CABLE	36
BUS BR7	L	A04T2	✓	1-02 *	C	BB11H-1					CABLE	36
BUS BR7				1						4-4/8		36

Jumper in lieu of module in F04 slot

RUN NAME	A/P	PIN NAME	ORDER PIN	BAY - ORDER	Q	DRAW	RV PG Y	X	Z	REMARKS	LENGTH	EXCEPTIONS	RUN NUMBER
BUS C0	L	B01U2 ✓		1-01 *	C		BB11H-1		2			CABLE	37
BUS C0	L	B04U2 ✓		1-02 *	C		BB11H-1		1			CABLE	37
BUS C0	L	B02J2 ✓		1-03 *			BB11H-5		2				37
BUS C0	L	B03J2 ✓		1-04 *			BB11H-6					TERM HERE?	37
BUS C0				1							12-3/8		37
BUS C1	L	B01T2 ✓		1-01 *	C		BB11H-1		1			CABLE	38
BUS C1	L	B04T2 ✓		1-02 *	C		BB11H-1		2			CABLE	38
BUS C1	L	B02F2 ✓		1-03 *			BB11H-5		1				38
BUS C1	L	B03F2 ✓		1-04 *			BB11H-6					TERM HERE?	38
BUS C1				1							12-5/8		38
BUS D00	L	A01C1	C01L2 ✓	1-01 *	C		BB11H-1		2			CABLE	39
BUS D00	L	A04C1	C01K1 ✓	1-02 *	C		BB11H-1		1			CABLE	39
BUS D00	L	D04T2		1-03 *			BB11H-2		2				39
BUS D00	L	D03T2		1-04 *			BB11H-2		1				39
BUS D00	L	D02T2		1-05 *			BB11H-3		2				39
BUS D00	L	D01T2		1-06 *			BB11H-1		1				39
BUS D00	L	E01H1 ✗		1-07 *			BB11H-4		2				39
BUS D00	L	E01P1 ✓		1-08 *			BB11H-4		1				39
BUS D00	L	E02P1		1-09 *			BB11H-4		2				39
BUS D00	L	E03P1		1-10 *			BB11H-4		1				39
BUS D00	L	E04P1		1-11 *			BB11H-4					TERM HERE?	39
BUS D00				1							47-0/8		39
BUS D01	L	A01D2	C02V2 ✓	1-01 *	C		BB11H-1		2			CABLE	40
BUS D01	L	A04D2		1-02 *	C		BB11H-1		1			CABLE	40
BUS D01	L	C04D1		1-03 *			BB11H-2		2				40
BUS D01	L	C03D1		1-04 *			BB11H-2		1				40
BUS D01	L	C02D1		1-05 *			BB11H-3		2				40
BUS D01	L	C01D1		1-06 *			BB11H-3		1				40
BUS D01	L	E02H1		1-07 *			BB11H-4		2				40
BUS D01	L	E01N1 ✓		1-08 *			BB11H-4		1				40
BUS D01	L	E02N1		1-09 *			BB11H-4		2				40
BUS D01	L	E03N1		1-10 *			BB11H-4		1				40
BUS D01	L	E04N1		1-11 *			BB11H-4					TERM HERE?	40
BUS D01				1							46-6/8		40

RUN NAME	A/P	PIN NAME	ORDER PIN	BAY - ORDER	Q	DRAW	RV PG Y	X	Z	REMARKS	LENGTH	EXCEPTIONS	RUN NUMBER
BUS D02	L	A04D1	C01J2 ✓	1-01 *	C		BB11H-1		2			CABLE	41
BUS D02	L	A01D1	E01E1 ✓	1-02 *	C		BB11H-1		1			CABLE	41
BUS D02	L	C01C1		1-03 *			BB11H-3		2				41
BUS D02	L	C02C1		1-04 *			BB11H-3		1				41
BUS D02	L	C03C1		1-05 *			BB11H-2		2				41
BUS D02	L	C04C1		1-06 *			BB11H-2		1				41
BUS D02	L	E03H1		1-07 *			BB11H-4		2				41
BUS D02	L	E01R2 ✓		1-08 *			BB11H-4		1				41
BUS D02	L	E02R2		1-09 *			BB11H-4		2				41
BUS D02	L	E03R2		1-10 *			BB11H-4		1				41
BUS D02	L	E04R2		1-11 *			BB11H-4		2				41
BUS D02	L	F04E2		1-12 *			BB11H-6		1				41
BUS D02	L	F02E2		1-13 *			BB11H-5					TERM HERE?	41
BUS D02				1							55-7/8		41
BUS D03	L	A04E2	C02P2 ✓	1-01 *	C		BB11H-1		2			CABLE	42
BUS D03	L	A01E2		1-02 *	C		BB11H-1		1			CABLE	42
BUS D03	L	D01V1		1-03 *			BB11H-3		2				42
BUS D03	L	D02V1		1-04 *			BB11H-3		1				42
BUS D03	L	D03V1		1-05 *			BB11H-2		2				42
BUS D03	L	D04V1		1-06 *			BB11H-2		1				42
BUS D03	L	E04H1		1-07 *			BB11H-4		2				42
BUS D03	L	E04S2		1-08 *			BB11H-4		1				42
BUS D03	L	E03S2		1-09 *			BB11H-4		2				42
BUS D03	L	E02S2		1-10 *			BB11H-4		1				42
BUS D03	L	E01S2 ✓		1-11 *			BB11H-4		2				42
BUS D03	L	F02L1		1-12 *			BB11H-5		1				42
BUS D03	L	F04L1		1-13 *			BB11H-6					TERM HERE?	42
BUS D03				1							56-2/8		42
BUS D04	L	A01E1	C02L2 ✓	1-01 *	C		BB11H-1		2			CABLE	43
BUS D04	L	A04E1		1-02 *	C		BB11H-1		1			CABLE	43
BUS D04	L	D04B1		1-03 *			BB11H-2		2				43
BUS D04	L	D03B1		1-04 *			BB11H-2		1				43
BUS D04	L	D02B1		1-05 *			BB11H-3		2				43
BUS D04	L	D01B1		1-06 *			BB11H-3		1				43
BUS D04	L	E01T2 ✓		1-07 *			BB11H-4		2				43
BUS D04	L	E02T2		1-08 *			BB11H-4		1				43
BUS D04	L	E03T2		1-09 *			BB11H-4		2				43
BUS D04	L	E04T2		1-10 *			BB11H-4		1				43
BUS D04	L	F04N2		1-11 *			BB11H-6		2				43
BUS D04	L	F02N2		1-12 *			BB11H-5					TERM HERE?	43
BUS D04				1							53-0/8		43

RUN NAME	A/P	PIN NAME	ORDER PIN	BAY - ORDER	Q	DRAW	RV PG Y	X	Z	REMARKS	LENGTH	EXCEPTIONS	RUN NUMBER
BUS D05	L	A01F2	C02V1	1-01 *	C		BB11H-1		2			CABLE	44
BUS D05	L	A04F2		1-02 *	C		BB11H-1		1			CABLE	44
BUS D05	L	D04C1		1-03 *			BB11H-2		2				44
BUS D05	L	D03C1		1-04 *			BB11H-2		1				44
BUS D05	L	D02C1		1-05 *			BB11H-3		2				44
BUS D05	L	D01C1		1-06 *			BB11H-3		1				44
BUS D05	L	E01U2		1-07 *			BB11H-4		2				44
BUS D05	L	E02U2		1-08 *			BB11H-4		1				44
BUS D05	L	E03U2		1-09 *			BB11H-4		2				44
BUS D05	L	E04U2		1-10 *			BB11H-4		1				44
BUS D05	L	F04F1		1-11 *			BB11H-6		2				44
BUS D05	L	F02F1		1-12 *			BB11H-6					TERM HERE?	44
BUS D05				1							52-4/8		44
BUS D06	L	A01F1	C01V1	1-01 *	C		BB11H-1		2			CABLE	45
BUS D06	L	A04F1		1-02 *	C		BB11H-1		1			CABLE	45
BUS D06	L	D04J1	E02E1	1-03 *			BB11H-2		2				45
BUS D06	L	D03J1		1-04 *			BB11H-2		1				45
BUS D06	L	D02J1		1-05 *			BB11H-3		2				45
BUS D06	L	D01J1		1-06 *			BB11H-3		1				45
BUS D06	L	E01R1		1-07 *			BB11H-4		2				45
BUS D06	L	E02R1		1-08 *			BB11H-4		1				45
BUS D06	L	E03R1		1-09 *			BB11H-4		2				45
BUS D06	L	E04R1		1-10 *			BB11H-4		1				45
BUS D06	L	F04F2		1-11 *			BB11H-6		2				45
BUS D06	L	F02F2		1-12 *			BB11H-5					TERM HERE?	45
BUS D06				1							52-0/8		45
BUS D07	L	A01H2	C01J1	1-01 *	C		BB11H-1		2			CABLE	46
BUS D07	L	A04H2	C01P2	1-02 *	C		BB11H-1		1			CABLE	46
BUS D07	L	D04K1	E01H1	1-03 *			BB11H-2		2				46
BUS D07	L	D03K1		1-04 *			BB11H-2		1				46
BUS D07	L	D02K1		1-05 *			BB11H-3		2				46
BUS D07	L	D01K1		1-06 *			BB11H-3		1				46
BUS D07	L	E01S1		1-07 *			BB11H-4		2				46
BUS D07	L	E02S1		1-08 *			BB11H-4		1				46
BUS D07	L	E03S1		1-09 *			BB11H-4		2				46
BUS D07	L	E04S1		1-10 *			BB11H-4		1				46
BUS D07	L	F04H1		1-11 *			BB11H-6		2				46
BUS D07	L	F02H1		1-12 *			BB11H-5					TERM HERE?	46
BUS D07				1							52-0/8		46

RUN NAME	A/P	PIN NAME	ORDER PIN	BAY - ORDER	Q	DRAW	RV PG Y	X	Z	REMARKS	LENGTH	EXCEPTIONS	RUN NUMBER
BUS D08	L	A01H1		1-01 *	C		BB11H-1		2			CABLE	47
BUS D08	L	A04H1		1-02 *	C		BB11H-1		1			CABLE	47
BUS D08	L	D04D1		1-03 *			BB11H-2		2				47
BUS D08	L	D03D1		1-04 *			BB11H-2		1				47
BUS D08	L	D02D1		1-05 *			BB11H-3		2				47
BUS D08	L	D01D1		1-06 *			BB11H-3		1				47
BUS D08	L	E01M2		1-07 *			BB11H-4		2				47
BUS D08	L	E02M2		1-08 *			BB11H-4		1				47
BUS D08	L	E03M2		1-09 *			BB11H-4		2				47
BUS D08	L	E04M2		1-10 *			BB11H-4		1				47
BUS D08	L	F04K1		1-11 *			BB11H-6		2				47
BUS D08	L	F02K1		1-12 *			BB11H-5					TERM HERE?	47
BUS D08				1							52-4/8		47
BUS D09	L	A04J2		1-01 *	C		BB11H-1		2			CABLE	48
BUS D09	L	A01J2		1-02 *	C		BB11H-1		1			CABLE	48
BUS D09	L	D01H1		1-03 *			BB11H-3		2				48
BUS D09	L	D02H1		1-04 *			BB11H-3		1				48
BUS D09	L	D03H1		1-05 *			BB11H-2		2				48
BUS D09	L	D04H1		1-06 *			BB11H-2		1				48
BUS D09	L	E04L2		1-07 *			BB11H-4		2				48
BUS D09	L	E03L2		1-08 *			BB11H-4		1				48
BUS D09	L	E02L2		1-09 *			BB11H-4		2				48
BUS D09	L	E01L2		1-10 *			BB11H-4					TERM HERE?	48
BUS D09				1							43-0/8		48
BUS D10	L	A01J1		1-01 *	C		BB11H-1		2			CABLE	49
BUS D10	L	A04J1		1-02 *	C		BB11H-1		1			CABLE	49
BUS D10	L	D04F1		1-03 *			BB11H-2		2				49
BUS D10	L	D03F1		1-04 *			BB11H-2		1				49
BUS D10	L	D02F1		1-05 *			BB11H-3		2				49
BUS D10	L	D01F1		1-06 *			BB11H-3		1				49
BUS D10	L	E01J1		1-07 *			BB11H-4		2				49
BUS D10	L	E02J1		1-08 *			BB11H-4		1				49
BUS D10	L	E03J1		1-09 *			BB11H-4		2				49
BUS D10	L	E04J1		1-10 *			BB11H-4					TERM HERE?	49
BUS D10				1							42-0/8		49

RUN NAME	A/P	PIN NAME	ORDER PIN	BAY - ORDER	Q	DRAW RV PG Y	X	Z	REMARKS	LENGTH	EXCEPTIONS	RUN NUMBER
BUS D11	L	A01K2		1-01 *	C	BB11H-1		2				50
BUS D11	L	A04K2		1-02 *	C	BB11H-1		1			CABLE	50
BUS D11	L	D04E2		1-03 *		BB11H-2		2			CABLE	50
BUS D11	L	D03E2		1-04 *		BB11H-2		1				50
BUS D11	L	D02E2		1-05 *		BB11H-3		2				50
BUS D11	L	D01E2		1-06 *		BB11H-3		1				50
BUS D11	L	E01K1		1-07 *		BB11H-4		2				50
BUS D11	L	E02K1		1-08 *		BB11H-4		1				50
BUS D11	L	E03K1		1-09 *		BB11H-4		2				50
BUS D11	L	E04K1		1-10 *		BB11H-4						50
BUS D11				1							TERM HERE?	50
										42-2/8		50
BUS D12	L	A01K1		1-01 *	C	BB11H-1		2				51
BUS D12	L	A04K1		1-02 *	C	BB11H-1		1			CABLE	51
BUS D12	L	D04D2		1-03 *		BB11H-2		2			CABLE	51
BUS D12	L	D03D2		1-04 *		BB11H-2		1				51
BUS D12	L	D02D2		1-05 *		BB11H-3		2				51
BUS D12	L	D01D2		1-06 *		BB11H-3		1				51
BUS D12	L	E01L1		1-07 *		BB11H-4		2				51
BUS D12	L	~~E02L1~~		1-08 *		BB11H-4		1				51
BUS D12	L	~~E03L1~~		1-09 *		BB11H-4		2				51
BUS D12	L	~~E04L1~~		1-10 *		BB11H-4						51
BUS D12				1							TERM HERE?	51
										42-6/8		51
BUS D13	L	A01L2		1-01 *	C	BB11H-1		2				52
BUS D13	L	A04L2		1-02 *	C	BB11H-1		1			CABLE	52
BUS D13	L	D04H2		1-03 *		BB11H-2		2			CABLE	52
BUS D13	L	D03H2		1-04 *		BB11H-2		1				52
BUS D13	L	D02H2		1-05 *		BB11H-3		2				52
BUS D13	L	D01H2		1-06 *		BB11H-3		1				52
BUS D13	L	E01M1		1-07 *		BB11H-4		2				52
BUS D13	L	~~E02M1~~		1-08 *		BB11H-4		1				52
BUS D13	L	~~E03M1~~		1-09 *		BB11H-4		2				52
BUS D13	L	~~E04M1~~		1-10 *		BB11H-4						52
BUS D13				1							TERM HERE?	52
										42-4/8		52
BUS D14	L	A01L1		1-01 *	C	BB11H-1		2				53
BUS D14	L	A04L1		1-02 *	C	BB11H-1		1			CABLE	53
BUS D14	L	D04F2		1-03 *		BB11H-2		2			CABLE	53
BUS D14	L	D03F2		1-04 *		BB11H-2		1				53
BUS D14	L	D02F2		1-05 *		BB11H-3		2				53
BUS D14	L	D01F2		1-06 *		BB11H-3		1				53
BUS D14	L	E01N2		1-07 *		BB11H-4		2				53
BUS D14	L	~~E02N2~~		1-08 *		BB11H-4		1				53
BUS D14	L	~~E03N2~~		1-09 *		BB11H-4		2				53
BUS D14	L	~~E04N2~~		1-10 *		BB11H-4						53
BUS D14				1							TERM HERE?	53
										42-4/8		53

RUN NAME	A/P	PIN NAME	ORDER PIN	BAY - ORDER	Q	DRAW RV PG Y	X	Z	REMARKS	LENGTH	EXCEPTIONS	RUN NUMBER
BUS D15	L	A01M2	C01V2	1-01 *	C	BB11H-1		2				54
BUS D15	L	A04M2		1-02 *	C	BB11H-1		1			CABLE	54
BUS D15	L	D04E1		1-03 *		BB11H-2		2			CABLE	54
BUS D15	L	D03E1		1-04 *		BB11H-2		1				54
BUS D15	L	D02E1		1-05 *		BB11H-3		2				54
BUS D15	L	D01E1		1-06 *		BB11H-3		1				54
BUS D15	L	E01P2		1-07 *		BB11H-4		2				54
BUS D15	L	~~E02P2~~		1-08 *		BB11H-4		1				54
BUS D15	L	~~E03P2~~		1-09 *		BB11H-4		2				54
BUS D15	L	~~E04P2~~		1-10 *		BB11H-4						54
BUS D15				1							TERM HERE?	54
										42-6/8		54
BUS DA	L	A01M1		1-01 *	C	BB11H-1		1				55
BUS DA	L	A04M1		1-02 *	C	BB11H-1					CABLE	55
BUS DA				1							CABLE	55
										4-4/8		55
BUS DCLO	L	B01F2		1-01 *	C	BB11H-1		1				56
BUS DCLO	L	B04F2		1-02 *	C	BB11H-1					CABLE	56
BUS DCLO				1							CABLE	56
										4-4/8		56
BUS INIT	L	A01A1		1-01 *	2	BB11H-1		2				57
BUS INIT	L	A04A1		1-02 *	C	BB11H-1		1			TERM HERE?	57
BUS INIT	L	F01L1		1-03 *		BB11H-5					CABLE	57
BUS INIT				1							TERM HERE?	57
										23-2/8		57
BUS INTR	L	A01B1		1-01 *	C	BB11H-1		2				58
BUS INTR	L	A04B1		1-02 *	C	BB11H-1		1			CABLE	58
BUS INTR	L	F04M1		1-03 *		BB11H-6		2			CABLE	58
BUS INTR	L	F02M1		1-04 *		BB11H-5						58
BUS INTR				1							TERM HERE?	58
										26-0/8		58
BUS MSYN	L	B03E1		1-01 *		BB11H-6		2				59
BUS MSYN	L	B02E1		1-02 *		BB11H-5		1			TERM HERE?	59
BUS MSYN	L	B01V1		1-03 *	C	BB11H-1		2				59
BUS MSYN	L	B04V1		1-04 *	C	BB11H-1					CABLE	59
BUS MSYN				1							CABLE	59
										13-0/8		59
BUS NPG	H	A01U1		1-01 *	C	BB11H-1		1				60
BUS NPG	H	A04U1		1-02 *	C	BB11H-1					CABLE	60
BUS NPG				1							CABLE	60
										4-4/8		60
BUS NPR	L	A01S2		1-01 *	C	BB11H-1		2				61
BUS NPR	L	A04S2		1-02 *	C	BB11H-1		1			CABLE	61
BUS NPR	L	F04J1		1-03 *		BB11H-6		2			CABLE	61
BUS NPR	L	F02J1		1-04 *		BB11H-5						61
BUS NPR				1							TERM HERE?	61
										24-0/8		61

RUN NAME	A/P	PIN NAME	ORDER PIN	BAY - ORDER	Q	DRAW	RV PG Y	X	Z	REMARKS	LENGTH	EXCEPTIONS	RUN NUMBER
BUS PB	L	A01N2		1-01 *	C		BB11H-1		1			CABLE	62
BUS PB	L	A04N2		1-02 *	C		BB11H-1					CABLE	62
BUS PB				1							4-4/8		62
BUS SACK	L	A01R2		1-01 *	C		BB11H-1		2			CABLE	63
BUS SACK	L	A04R2		1-02 *	C		BB11H-1		1			CABLE	63
BUS SACK	L	F04T2		1-03 *			BB11H-6		2				63
BUS SACK	L	F02T2		1-04 *			BB11H-5					TERM HERE?	63
BUS SACK				1							25-0/8		63
BUS SSYN	L	B01U1		1-01 *	C		BB11H-1		2			CABLE	64
BUS SSYN	L	B04U1		1-02 *	C		BB11H-1		1			CABLE	64
BUS SSYN	L	B03J1		1-03 *			BB11H-6		2				64
BUS SSYN	L	B02J1		1-04 *			BB11H-5		1				64
BUS SSYN	L	F02C1		1-05 *			BB11H-5		2				64
BUS SSYN	L	F04C1		1-06 *			BB11H-6					TERM HERE?	64
BUS SSYN				1							29-4/8		64
CLK CSR OUT	H	E04D2	E01H2	1-01 *			BB11H-4		2				65
CLK CSR	H	E03D2	E02H2	1-02 *			BB11H-4		1				65
CLK CSR	H	E02D2		1-03 *			BB11H-4		2				65
CLK CSR	H	E01D2		1-04 *			BB11H-4		1				65
CLK CSR	H	F01J2		1-05 *			BB11H-5						65
CLK CSR				1							16-6/8		65
DA 1	L	~~C01L1~~		1-01 *	1				1				66
DA 1	L	~~F01R2~~		1-02 *									66
DA 1				1							11-6/8		66
DA 2	L	~~C02L1~~		1-01 *	1				1				67
DA 2	L	~~F01S1~~		1-02 *									67
DA 2				1							12-2/8		67
DA 3	L	C03L1		1-01 *	1				1				68
DA 3	L	F03R2		1-02 *									68
DA 3				1							11-6/8		68
DA 4	L	C04L1		1-01 *	1				1				69
DA 4	L	F03S1		1-02 *									69
DA 4				1							12-2/8		69
F01S2		F01S2		1-01 *	1		BB11H-5		1				70
F01S2		F01T2		1-02 *			BB11H-5						70
F01S2				1							2-3/8		70

RUN NAME	A/P	PIN NAME	ORDER PIN	BAY - ORDER	Q	DRAW	RV PG Y	X	Z	REMARKS	LENGTH	EXCEPTIONS	RUN NUMBER
GND 01		A01B2	C01H2	1-01 *			BB11H-1		1				71
GND 01		A01C2		1-02 *			BB11H-1		2				71
GND 01		A01N1	C01R1	1-03 *			BB11H-1		1				71
GND 01		A01P1		1-04 *			BB11H-1		2				71
GND 01		A01R1		1-05 *			BB11H-1		1				71
GND 01		A01S1		1-06 *			BB11H-1		2				71
GND 01		A01T1		1-07 *					1				71
GND 01		A01V2		1-08 *			BB11H-1		2				71
GND 01		B01B2		1-09 *			BB11H-1		1				71
GND 01		B01C2		1-10 *			BB11H-1		2				71
GND 01		B01D1		1-11 *			BB11H-1		1				71
GND 01		B01E1		1-12 *			BB11H-1		2				71
GND 01		B01T1		1-13 *			BB11H-1		1				71
GND 01		B01V2		1-14 *			BB11H-1		2				71
GND 01		C01C2		1-15 *					1				71
GND 01		C01P1		1-16 *					2				71
GND 01		C01T1		1-17 *					1				71
GND 01		D01C2		1-18 *					2				71
GND 01		D01T1		1-19 *					1				71
GND 01		E01C2		1-20 *					2				71
GND 01		~~E01B1~~		1-21 *					1				71
GND 01		E01C1		1-22 *			BB11H-4		2				71
GND 01		~~E01E1~~		1-23 *			BB11H-4		1				71
GND 01		E01T1		1-24 *					2				71
GND 01		F01C2		1-25 *					1				71
GND 01		F01H2	F01M1	1-26 *			BB11H-5		2				71
GND 01		F01M1		1-27 *					1				71
GND 01		F01T1	F01R1	1-28 *					2				71
GND 01		F01R1		1-29 *									71
GND 01				1							90-7/8		71

RUN NAME	A/P	PIN NAME	ORDER PIN	BAY - ORDER	Q	DRAW	RV	PG	Y	X	Z	REMARKS	LENGTH	EXCEPTIONS	RUN NUMBER
GND 02		A02C2	E02E2	1-01 *							1				72
GND 02		A02T1	F02K2	1-02 *							2				72
GND 02		B02A1		1-03 *			BB11H=5				1				72
GND 02		B02C2	F02H2	1-04 *							2				72
GND 02		B02T1		1-05 *							1				72
GND 02		C02C2	C02H2	1-06 *							2				72
GND 02		C02P1		1-07 *							1				72
GND 02		C02T1		1-08 *							2				72
GND 02		D02C2		1-09 *							1				72
GND 02		D02T1		1-10 *							2				72
GND 02		E02C2		1-11 *							1				72
GND 02		~~E02B1~~		1-12 *			BB11H=4				2				72
GND 02		E02C1		1-13 *			BB11H=4				1				72
GND 02		~~E02E1~~		1-14 *			BB11H=4				2				72
GND 02		E02T1		1-15 *							1				72
GND 02		F02C2		1-16 *							2				72
GND 02		F02J2		1-17 *			BB11H=5				1				72
GND 02		F02T1		1-18 *											72
GND 02				1									64-7/8		72
GND 03		A03C2		1-01 *							1				73
GND 03		A03T1		1-02 *							2				73
GND 03		B03A1		1-03 *			BB11H=6				1				73
GND 03		B03C2		1-04 *							2				73
GND 03		B03T1		1-05 *							1				73
GND 03		C03C2		1-06 *							2				73
GND 03		C03P1		1-07 *			BB11H=2				1				73
GND 03		C03T1		1-08 *							2				73
GND 03		D03C2		1-09 *							1				73
GND 03		D03T1		1-10 *							2				73
GND 03		E03C2		1-11 *							1				73
GND 03		E03B1		1-12 *							2				73
GND 03		E03C1		1-13 *			BB11H=4				1				73
GND 03		E03E1		1-14 *			BB11H=4				2				73
GND 03		E03T1		1-15 *							1				73
GND 03		F03C2		1-16 *							2				73
GND 03		F03T1	F03R1	1-17 *							1				73
GND 03		F03R1		1-18 *											73
GND 03				1									64-3/8		73

RUN NAME	A/P	PIN NAME	ORDER PIN	BAY - ORDER	Q	DRAW	RV	PG	Y	X	Z	REMARKS	LENGTH	EXCEPTIONS	RUN NUMBER
GND 04		A04B2		1-01 *			BB11H=1				1				74
GND 04		A04C2		1-02 *							2				74
GND 04		A04N1		1-03 *			BB11H=1				1				74
GND 04		A04P1		1-04 *			BB11H=2				2				74
GND 04		A04R1		1-05 *			BB11H=1				1				74
GND 04		A04S1		1-06 *			BB11H=1				2				74
GND 04		A04T1		1-07 *							1				74
GND 04		A04V2		1-08 *			BB11H=1				2				74
GND 04		B04B2		1-09 *			BB11H=1				1				74
GND 04		B04C2		1-10 *			BB11H=1				2				74
GND 04		B04D1		1-11 *			BB11				1				74
GND 04		B04E1		1-12 *							2				74
GND 04		B04T1		1-13 *							1				74
GND 04		B04V2		1-14 *			BB11H=1				2				74
GND 04		C04C2		1-15 *							1				74
GND 04		C04P1		1-16 *							2				74
GND 04		C04T1		1-17 *							1				74
GND 04		D04C2		1-18 *							2				74
GND 04		D04T1		1-19 *							1				74
GND 04		E04C2		1-20 *							2				74
GND 04		E04B1		1-21 *			BB11H=4				1				74
GND 04		E04C1		1-22 *			BB11H=4				2				74
GND 04		E04E1		1-23 *			BB11H=4				1				74
GND 04		E04T1		1-24 *							2				74
GND 04		F04C2		1-25 *							1				74
GND 04		F04J2		1-26 *			BB11H=6				2				74
GND 04		F04T1		1-27 *											74
GND 04				1									85-3/8		74
IN 0	H	B02M1		1-01 *			BB11H=5				2				75
IN 0	H	E01J2		1-02 *							1				75
IN 0	H	E02J2		1-03 *			BB11H=4				2				75
IN 0	H	E03J2		1-04 *			BB11H=4				1				75
IN 0	H	E04J2		1-05 *			BB11H=4				2				75
IN 0	H	F03B1		1-06 *			BB11H=6				1				75
IN 0	H	F03D1		1-07 *			BB11H=6				2				75
IN 0	H	~~F01D1~~		1-08 *			BB11H=5				1				75
IN 0	H	~~F01B1~~		1-09 *			BB11H=5								75
IN 0				1									36-2/8		75

RUN NAME	A/P	PIN NAME	ORDER PIN	BAY - ORDER	Q	DRAW	RV	PG	Y	X	Z	REMARKS	LENGTH	EXCEPTIONS	RUN NUMBER
INIT	L	C01E1		1-01 *	1						1				76
INIT	L	C02E1		1-02 *							2				76
INIT	L	C03E1		1-03 *							1				76
INIT	L	C04E1		1-04 *							2				76
INIT	L	E01F1		1-05 *							1				76
INIT	L	E02F1		1-06 *							2				76
INIT	L	E03F1		1-07 *							1				76
INIT	L	E04F1		1-08 *							2				76
INIT	L	F01U2		1-09 *											76
INIT				1									39-2/8		76
INTR DONE A1	H	F02L2		1-01 *				BB11H-5			1				77
INTR DONE A1	H	F02R1		1-02 *				BB11H-5							77
INTR DONE A1				1									3-4/8		77
INTR DONE A3	H	F04L2		1-01 *				BB11H-6			1				78
INTR DONE A3	H	F04R1		1-02 *				BB11H-6							78
INTR DONE A3				1									3-4/8		78
INTR DONE B2	H	F02M2		1-01 *				BB11H-5			1				79
INTR DONE B2	H	F02S1		1-02 *				BB11H-5							79
INTR DONE B2				1									3-4/8		79
INTR DONE B4	H	F04M2		1-01 *				BB11H-6			1				80
INTR DONE B4	H	F04S1		1-02 *				BB11H-6							80
INTR DONE B4				1									3-4/8		80
IR1		~~E01H2~~		1-01 *				BB11H-4			1				81
IR1		~~E01V2~~		1-02 *				BB11H-4							81
IR1				1									4-4/8		81
IR2		~~E02H2~~		1-01 *				BB11H-4			1				82
IR2		~~E02V2~~		1-02 *				BB11H-4							82
IR2				1									4-4/8		82
IR3		E03H2		1-01 *				BB11H-4			1				83
IR3		E03V2		1-02 *				BB11H-4							83
IR3				1									4-4/8		83
IR4		E04H2		1-01 *				BB11H-4			1				84
IR4		E04V2		1-02 *				BB11H-4							84
IR4				1									4-4/8		84
MASTER A1	L	F02D2		1-01 *				BB11H-5			2				85
MASTER A1	L	F02R2		1-02 *				BB11H-5			1				85
MASTER A1	L	F02N1		1-03 *				BB11H-5							85
MASTER A1				1									7-0/8		85

RUN NAME	A/P	PIN NAME	ORDER PIN	BAY - ORDER	Q	DRAW	RV	PG	Y	X	Z	REMARKS	LENGTH	EXCEPTIONS	RUN NUMBER
MASTER A3		F04D2		1-01 *				BB11H-6			2				86
MASTER A3		F04R2		1-02 *				BB11H-6			1				86
MASTER A3		F04N1		1-03 *				BB11H-6							86
MASTER A3				1									7-0/8		86
MASTER B2	L	F02P2		1-01 *				BB11H-5			1				87
MASTER B2	L	F02S2		1-02 *				BB11H-5							87
MASTER B2				1									2-6/8		87
MASTER B4	L	F04P2		1-01 *				BB11H-6			1				88
MASTER B4	L	F04S2		1-02 *				BB11H-6							88
MASTER B4				1									2-6/8		88
OUT HIGH 1	H	B03M2		1-01 *				BB11H-6			1				89
OUT HIGH 1	H	C04A1		1-02 *				BB11H-2			2				89
OUT HIGH 1	H	C03A1		1-03 *				BB11H-2			1				89
OUT HIGH 1	H	C02A1		1-04 *				BB11H-3			2				89
OUT HIGH 1	H	C01A1		1-05 *				BB11H-3							89
OUT HIGH 1				1									15-0/8		89
OUT LOW 0	H	B02N1		1-01 *				BB11H-5			1				90
OUT LOW 0	H	F01H1		1-02 *				BB11H-5							90
OUT LOW 0				1									13-4/8		90
OUT LOW 1	H	B03N1	F01E1	1-01 *				BB11H-6			1				91
OUT LOW 1	H	C01B1		1-02 *				BB11H-3			2				91
OUT LOW 1	H	C02B1		1-03 *				BB11H-3			1				91
OUT LOW 1	H	C03B1		1-04 *				BB11H-2			2				91
OUT LOW 1	H	C04B1		1-05 *				BB11H-2							91
OUT LOW 1				1									15-1/8		91
RQ 1 (1)	H	~~E01D1~~	E02V1	1-01 *				BB11H-4			1				92
RQ 1 (1)	H	F02U1		1-02 *				BB11H-5							92
RQ 1 (1)				1									7-6/8		92
RQ 2 (1)	H	~~E02D1~~		1-01 *				BB11H-4			1				93
RQ 2 (1)	H	~~F02K2~~		1-02 *				BB11H-5							93
RQ 2 (1)				1									6-4/8		93
RQ 3 (1)	H	E03D1		1-01 *				BB11H-4			1				94
RQ 3 (1)	H	F04U1		1-02 *				BB11H-6							94
RQ 3 (1)				1									7-6/8		94
RQ 4 (1)	H	E04D1		1-01 *				BB11H-4			1				95
RQ 4 (1)	H	F04K2		1-02 *				BB11H-6							95
RQ 4 (1)				1									6-4/8		95

RUN NAME	A/P	PIN NAME	ORDER PIN	BAY - ORDER	Q	DRAW RV PG Y	X	Z	REMARKS	LENGTH	EXCEPTIONS	RUN NUMBER
RQE 1 (1)	H	~~E01A1~~	E02 D1	1-01 *		BB11H-4		1				96
RQE 1 (1)	H	F02V1	E02 V2	1-02 *		BB11H-5						96
RQE 1 (1)				1						8-4/8		96
RQE 2 (1)	H	~~E02A1~~		1-01 *		BB11H-4		1				97
RQE 2 (1)	H	~~F02H2~~		1-02 *		BB11H-5						97
RQE 2 (1)				1						6-6/8		97
RQE 3 (1)	H	E03A1		1-01 *		BB11H-4		1				98
RQE 3 (1)	H	F04V1		1-02 *		BB11H-6						98
RQE 3 (1)				1						8-4/8		98
RQE 4 (1)	H	E04A1		1-01 *		BB11H-4		1				99
RQE 4 (1)	H	F04H2		1-02 *		BB11H-6						99
RQE 4 (1)				1						6-6/8		99
RQR 00	H	~~E01E2~~		1-01 *		BB11H-4		1				100
RQR 00	H	~~F01E2~~		1-02 *		BB11H-5						100
RQR 00				1						5-6/8		100
RQR 02	H	~~E02E2~~		1-01 *		BB11H-4		1				101
RQR 02	H	~~F01F2~~		1-02 *		BB11H-5						101
RQR 02				1						6-2/8		101
RQR 04	H	E03E2		1-01 *		BB11H-4		1				102
RQR 04	H	F03E2		1-02 *		BB11H-6						102
RQR 04				1						5-6/8		102
RQR 06	H	E04E2		1-01 *		BB11H-4		1				103
RQR 06	H	F03F2		1-02 *		BB11H-6						103
RQR 06				1						6-2/8		103
SELECT 00	H	B02S2		1-01 *		BB11H-5		1				104
SELECT 00	H	E01K2		1-02 *		BB11H-4		2				104
SELECT 00	H	F01A1		1-03 *		BB11H-5		1				104
SELECT 00	H	F01J1		1-04 *		BB11H-5						104
SELECT 00				1						19-4/8		104
SELECT 02	H	B02T2		1-01 *		BB11H-5		1				105
SELECT 02	H	E02K2		1-02 *		BB11H-4		2				105
SELECT 02	H	~~F01C1~~		1-03 *		BB11H-5						105
SELECT 02				1						15-6/8		105
SELECT 04	H	B02R2		1-01 *		BB11H-5		1				106
SELECT 04	H	E03K2		1-02 *		BB11H-4		2				106
SELECT 04	H	F03A1		1-03 *		BB11H-6						106
SELECT 04				1						15-4/8		106

RUN NAME	A/P	PIN NAME	ORDER PIN	BAY - ORDER	Q	DRAW RV PG Y	X	Z	REMARKS	LENGTH	EXCEPTIONS	RUN NUMBER
SELECT 06	H	B02S1		1-01 *		BB11H-5		1				107
SELECT 06	H	E04K2		1-02 *		BB11H-4		2				107
SELECT 06	H	F03C1		1-03 *		BB11H-6						107
SELECT 06				1						17-0/8		107
SELECT 10	H	B03S2	F01C1 F01F1	1-01 *		BB11H-6		1				108
SELECT 10	H	~~C01M1~~	F01D2	1-02 *		BB11H-3		2				108
SELECT 10	H	~~F01D2~~	F01K1	1-03 *				1				108
SELECT 10	H	~~F01K1~~		1-04 *								108
SELECT 10				1						19-7/8		108
SELECT 12	H	B03T2	C01M1	1-01 *		BB11H-6		1				109
SELECT 12	H	~~C02M1~~	F01V2	1-02 *		BB11H-3		2				109
SELECT 12	H	~~F01V2~~		1-03 *								109
SELECT 12				1						17-6/8		109
SELECT 14	H	B03R2	C02M1	1-01 *		BB11H-6		1				110
SELECT 14	H	C03M1	F03D2	1-02 *		BB11H-2		2				110
SELECT 14	H	F03D2	F03K1	1-03 *				1				110
SELECT 14	H	F03K1		1-04 *								110
SELECT 14				1						19-6/8		110
SELECT 16	H	B03S1		1-01 *		BB11H-6		1				111
SELECT 16	H	C04M1	F03V2	1-02 *		BB11H-2		2				111
SELECT 16	H	F03V2		1-03 *								111
SELECT 16				1						17-4/8		111

THIS SCHEMATIC IS FURNISHED ONLY FOR TEST AND MAINTENANCE PURPOSES. THE CIRCUITS ARE PROPRIETARY IN NATURE AND SHOULD BE TREATED ACCORDINGLY.
COPYRIGHT 1971 BY DIGITAL EQUIPMENT CORPORATION

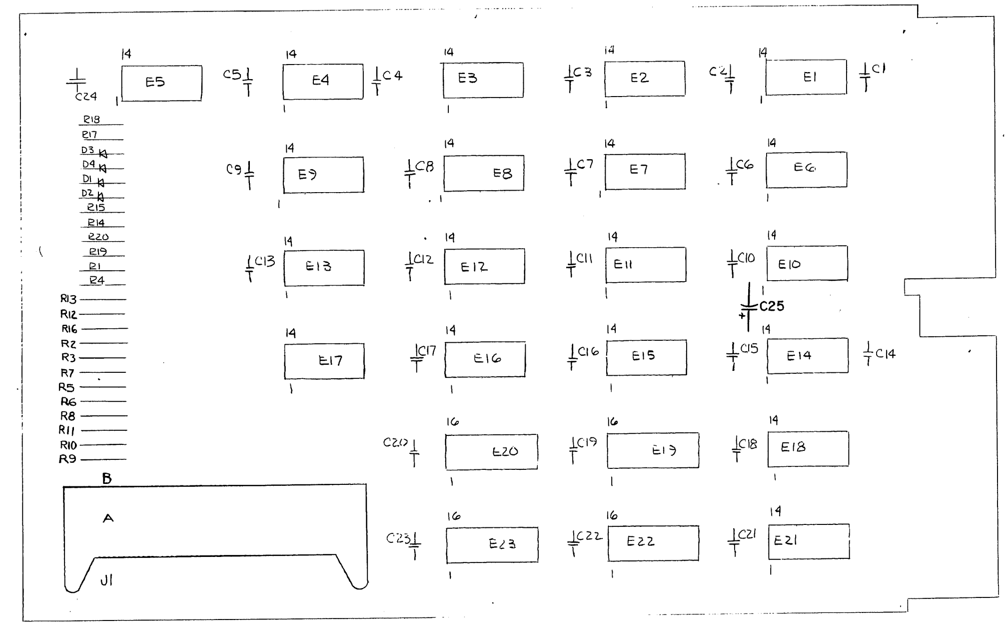

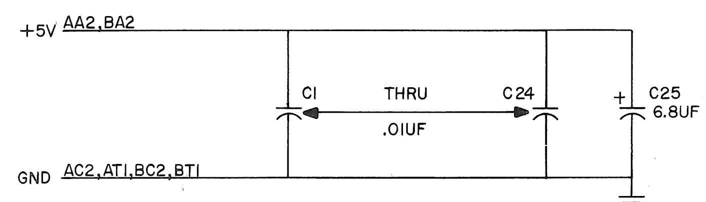

NOTES:

PIN 14 = +5V, PIN 7 = GND ON E1,E3,E4,E5,E6, E7,E8,E10,E17,E18,E21,E9,E11,E12

PIN 8 = +5V, PIN 1 = GND ON E2,E13,E14,E15,E16

PIN 16 = +5V, PIN 8 = GND ON E19,E20,E22,E23

QTY.	REF. DESIGNATION	DESCRIPTION	PART NO.	ITEM NO.
1	C25	CAP. 6.8UF 35V 20% TANT	1000067	22
2		HANDLE, FLIP CHIP - MAGENTA	9008337-06	21
4		EYELET	9006732	20
1	J1	CONN, 40P RT ANG HEADER	1209941	19
1	E10	I.C. DEC 8881	1909705	18
1	E7	I.C. DEC 7437	1910091	17
2	E4, E8	I.C. DEC 7474	1905547	16
2	E1, E6	I.C. DEC 7400	1905575	15
2	E3, E5	I.C. DEC 7402	1909004	14
5	E2, E13, E14, E15, E16	I.C. DEC 380	1909485	13
3	E17, E18, E21	I.C. DEC 7404	1909686	12
4	E19, E20, E22 E23	I.C. DEC 74175	1910651	11
3	E9, E11, E12	I.C. DEC 7406	1910741	10
4	D1 thru D4	DIODE D664	1100114	9
24	C1 thru C24	CAP. .01UF 100V 20% DISC	1001610	8
1	R18	RES. 330 ¼W 5%	1300295	7
18	R1 thru R16, R19, R20	RES. [illegible] ¼W 5%	1300365	6
1	R17	RES. [illegible] ¼W 5%	1301322	5
1		ETCHED CIRCUIT BOARD	5009787	4
		MODULE ECO HISTORY	B-MH-M1502-0-6	3
		ASSY/DRILLING HOLE LAYOUT	D-AH-M1502-0-5	2
		X-Y COORDINATE HOLE LOCATION	CO-M1502-0-4	1

PARTS LIST

REV.	CHG NO.	CHK	REVISIONS
B	ECO 00001	D. BAKER	

DRN. S. COOPER DATE 11-1-71
CHK'D NANCY MOORE DATE 11-8-71
ENG. Dwight Baker DATE 10-JAN-72
PROD. DATE

TRANSISTOR & DIODE CONVERSION CHART

DEC	EIA	DEC	EIA
D664	IN3606		

digital EQUIPMENT CORPORATION MAYNARD, MASSACHUSETTS

TITLE BUS OUT PUT INTERFACE

SIZE	CODE	NUMBER	REV.
C	CS	M1502-0-1	B

PRINTED CIRCUIT REV. C

DEC FORM NO. DRC 102

28

THIS SCHEMATIC IS FURNISHED ONLY FOR TEST AND MAINTENANCE PURPOSES. THE CIRCUITS ARE PROPRIETARY IN NATURE AND SHOULD BE TREATED ACCORDINGLY
COPYRIGHT 1971 BY DIGITAL EQUIPMENT CORPORATION

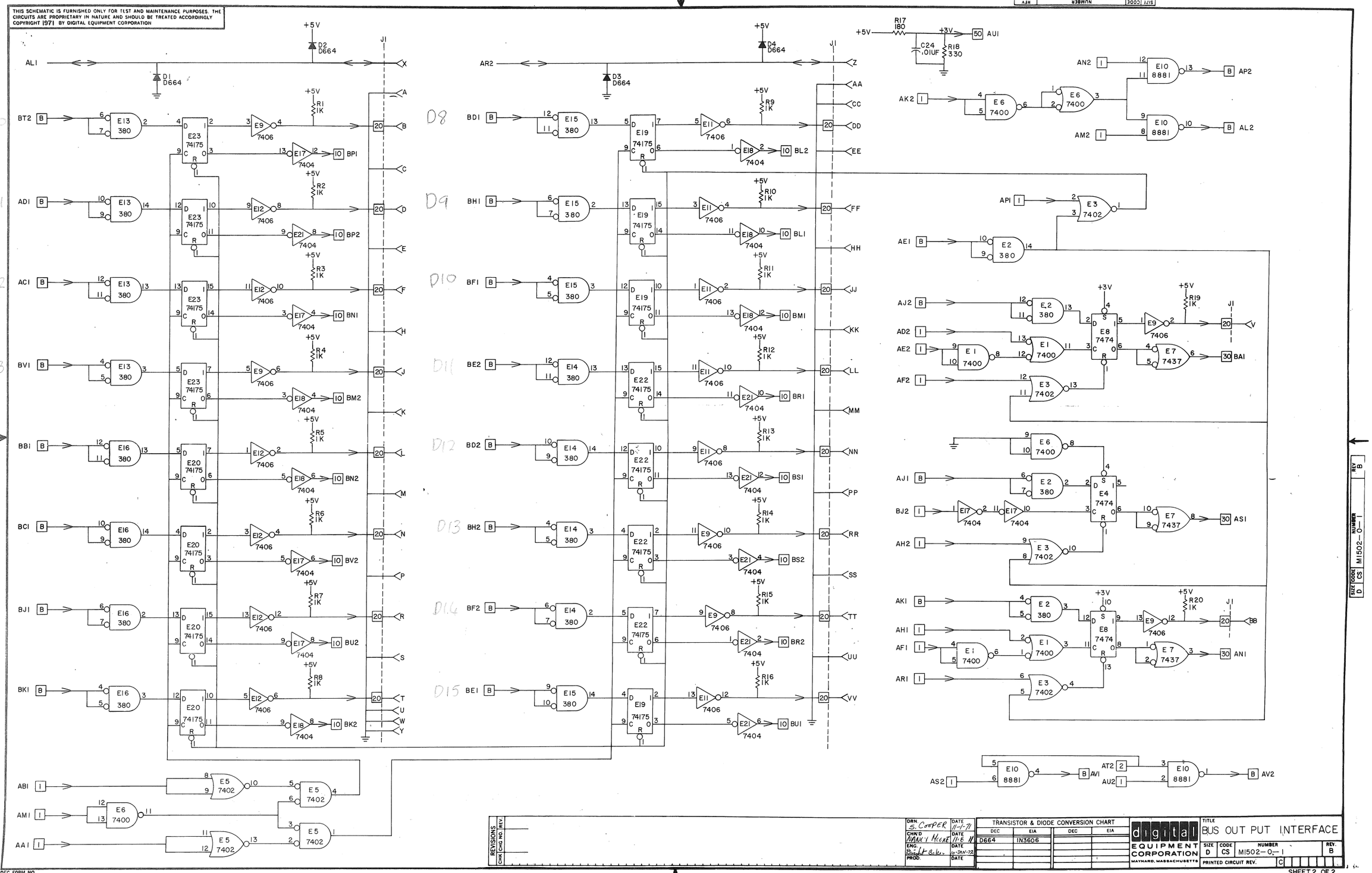

REVISIONS		
CHK	CHG NO.	REV.

DRN	S. COOPER	DATE 11-1-71
CHK'D	NANCY MOORE	DATE 11-8-71
ENG.	Robert Baker	DATE 10-30-72
PROD.		DATE

TRANSISTOR & DIODE CONVERSION CHART

DEC	EIA	DEC	EIA
D664	IN3606		

digital EQUIPMENT CORPORATION MAYNARD, MASSACHUSETTS

TITLE BUS OUT PUT INTERFACE

SIZE	CODE	NUMBER	REV.
D	CS	M1502-0-1	B

PRINTED CIRCUIT REV. C

SHEET 2 OF 2

DEC FORM NO. DRD 116

THIS SCHEMATIC IS FURNISHED ONLY FOR TEST AND MAINTENANCE PURPOSES. THE CIRCUITS ARE PROPRIETARY IN NATURE AND SHOULD BE TREATED ACCORDINGLY
COPYRIGHT 1971 BY DIGITAL EQUIPMENT CORPORATION

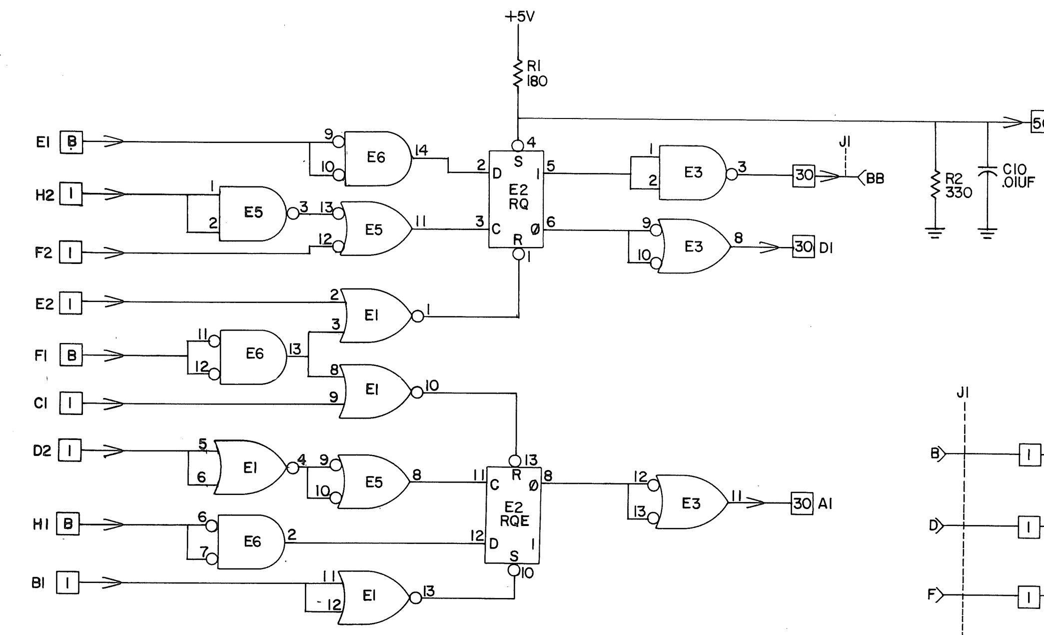

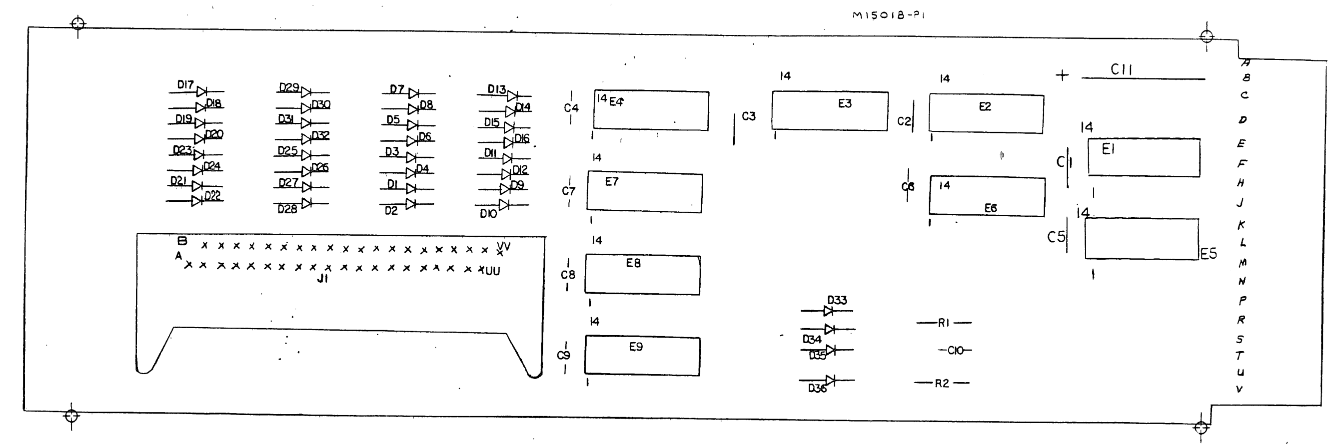

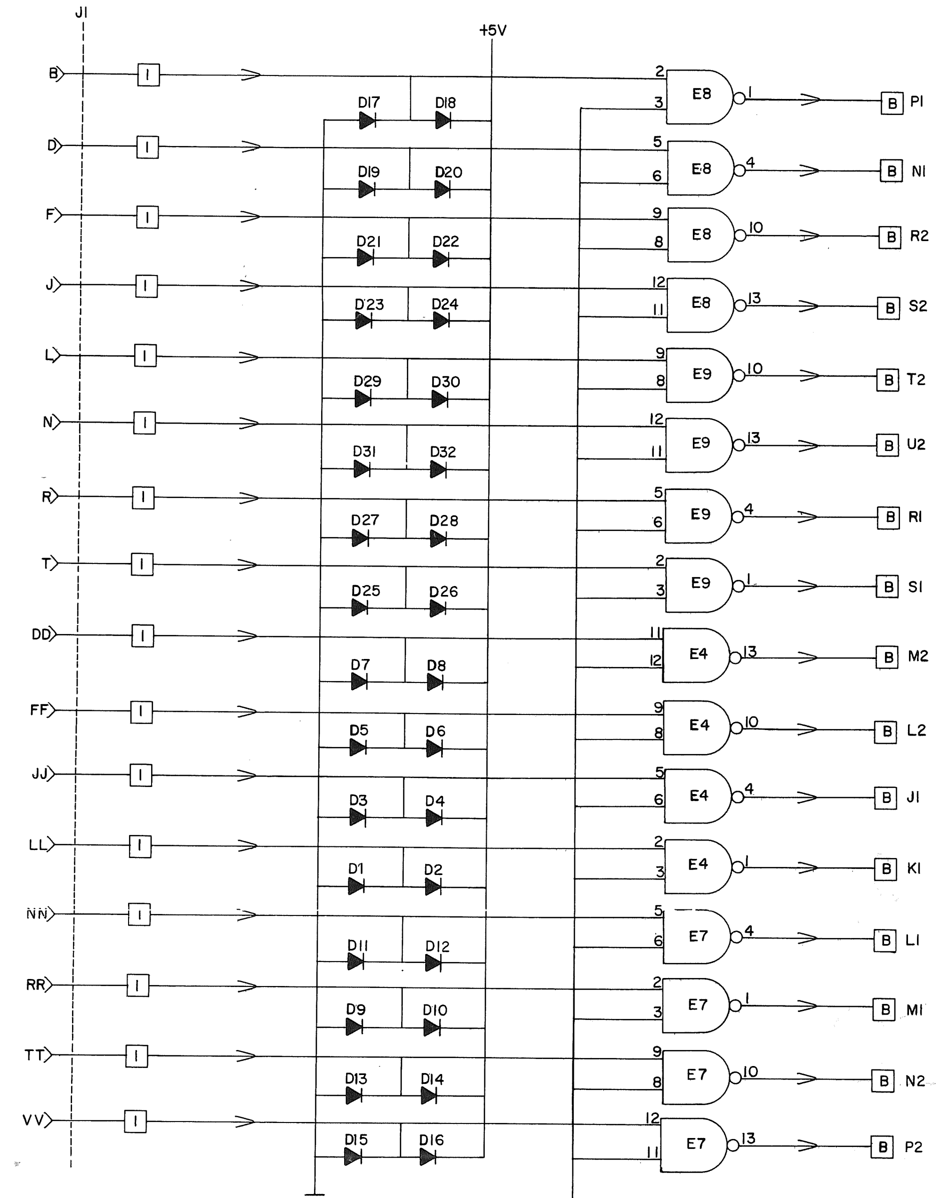

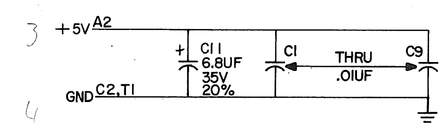

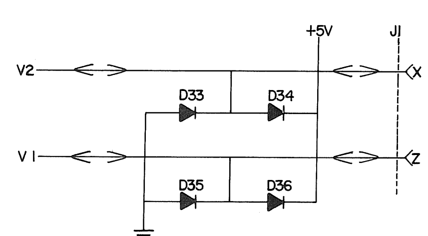

UNLESS OTHERWISE INDICATED:

ALL PINS ON J1 EQUAL GND

PIN 7 = GND
PIN 14 = +5V ON E1,E2,E3,E4,E5,E7,E8,E9

PIN 1 = GND
PIN 8 = +5V ON E6

ALL DIODES ARE D664

⇒ INDICATES DIRECTION OF SIGNAL FLOW. (INPUT, OUTPUT, OR BOTH)

# INDICATES THE NUMBER OF TTL UNIT LOADS.

B INDICATES BUS RECEIVER OR BUS DRIVER.

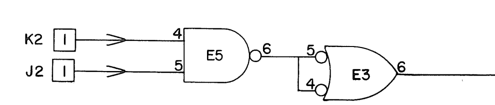

QTY	REF. DESIGNATION	PARTS LIST	DEC PART NO.	ITEM NO.
1	C11	CAP. 6.8UF 35V 20 %	1000067	18
1		HANDLE FLIPCHIP MAGENTA	908337-06	17
2		EYELET #GS4-7 E.B. STIMPSON	9006732	16
1	E3	IC DEC 7437	1910091	15
4	E4, E7, E8, E9	IC DEC 8881	1909705	14
1	E6	IC DEC 380	1909485	13
1	E1	IC DEC 7402	1909004	12
1	E5	IC DEC 7400	1905575	11
1	E2	IC DEC 7474	1905547	10
1	R2	RES. 330 ¼W 5%	1300295	9
1	R1	RES. 180 ¼W 5%	1301322	8
1	J1	CONNECTOR	1209941	7
36	D1- D36	DIODE D664	1100114	6
10	C1- C10	CAP. .01UF 100V 20% DISC.	10-01610	5
1		ETCHED CIRCUIT BOARD	5009719	4
		MODULE ECO HISTORY	B-MH-M1501-0-6	3
		ASSY/DRILLING HOLE LAYOUT	D -AH-M1501-0-5	2
		X-Y COORDINATE HOLE LOCATION	K-CO-M1501-0-4	1

REV.	CHG NO.	CHK	REVISIONS
A	00001		D. BAKER

DRN.	B.J. Hoile	DATE 8/11/71
CHK'D	NANCY MOORE	DATE 8 27 71
ENG.	Bart Baker	DATE 23NOV71
PROD.		DATE

TRANSISTOR & DIODE CONVERSION CHART

DEC	EIA	DEC	EIA
D664	IN3606		

digital EQUIPMENT CORPORATION MAYNARD, MASSACHUSETTS

TITLE INPUT INTERFACE MODULE

SIZE	CODE	NUMBER	REV.
D	CS	M1501-0-1	A

PRINTED CIRCUIT REV. B

DEC FORM NO. DRD 11S

THIS SCHEMATIC IS FURNISHED ONLY FOR TEST AND MAINTENANCE PURPOSES. THE CIRCUITS ARE PROPRIETARY IN NATURE AND SHOULD BE TREATED ACCORDINGLY
COPYRIGHT 1971 BY DIGITAL EQUIPMENT CORPORATION

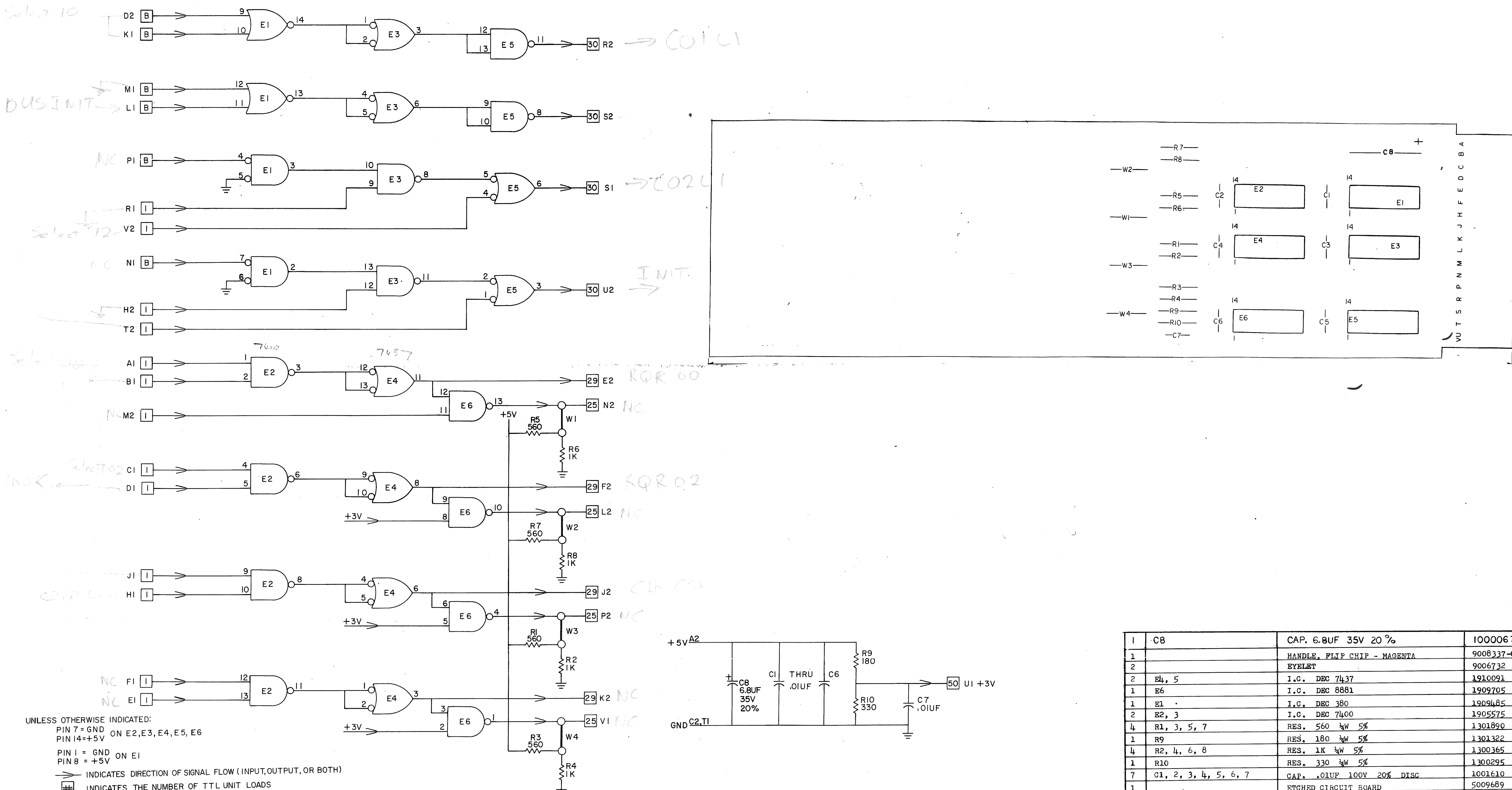

UNLESS OTHERWISE INDICATED:
PIN 7 = GND
PIN 14 = +5V ON E2, E3, E4, E5, E6
PIN 1 = GND
PIN 8 = +5V ON E1
—> INDICATES DIRECTION OF SIGNAL FLOW (INPUT, OUTPUT, OR BOTH)
# INDICATES THE NUMBER OF TTL UNIT LOADS
B MEANS BUS RECEIVER OR BUS DRIVER

QTY.	REF. DESIGNATION	DESCRIPTION	DEC PART NO.	ITEM NO.
1	C8	CAP. 6.8UF 35V 20%	1000067	16
1		HANDLE, FLIP CHIP - MAGENTA	9008337-06	15
2		EYELET	9006732	14
2	E4, 5	I.C. DEC 7437	1910091	13
1	E6	I.C. DEC 8881	1909705	12
1	E1	I.C. DEC 380	1909485	11
2	E2, 3	I.C. DEC 7400	1905575	10
4	R1, 3, 5, 7	RES. 560 ¼W 5%	1301890	9
1	R9	RES. 180 ¼W 5%	1301322	8
4	R2, 4, 6, 8	RES. 1K ¼W 5%	1300365	7
1	R10	RES. 330 ¼W 5%	1300295	6
7	C1, 2, 3, 4, 5, 6, 7	CAP. .01UF 100V 20% DISC	1001610	5
1		ETCHED CIRCUIT BOARD	5009689	4
		MODULE ECO HISTORY	B-MH-M1500-0-6	3
		ASSY/DRILLING HOLE LAYOUT	D-AH-M1500-0-5	2
		X-Y COORDINATE HOLE LOCATION	K-CO-M1500-0-4	1

PARTS LIST

REVISIONS		
REV.	CHG NO.	CHK
A	00001	D. BAKER

DRN. S. Cooper DATE 8-10-71
CHK'D [illegible] Moore DATE 8-13-71
ENG. Dwight Baker DATE 10-22-71
PROD. DATE

TRANSISTOR & DIODE CONVERSION CHART

DEC	EIA	DEC	EIA

digital EQUIPMENT CORPORATION MAYNARD, MASSACHUSETTS

TITLE BUS GATES MODULE

SIZE D CODE CS NUMBER M1500-0-1 REV. A

PRINTED CIRCUIT REV. B

DEC FORM NO. DRD 116

THIS SCHEMATIC IS FURNISHED ONLY FOR TEST AND MAINTENANCE PURPOSES. THE CIRCUITS ARE PROPRIETARY IN NATURE AND SHOULD BE TREATED ACCORDINGLY.
COPYRIGHT 1969 BY DIGITAL EQUIPMENT CORPORATION

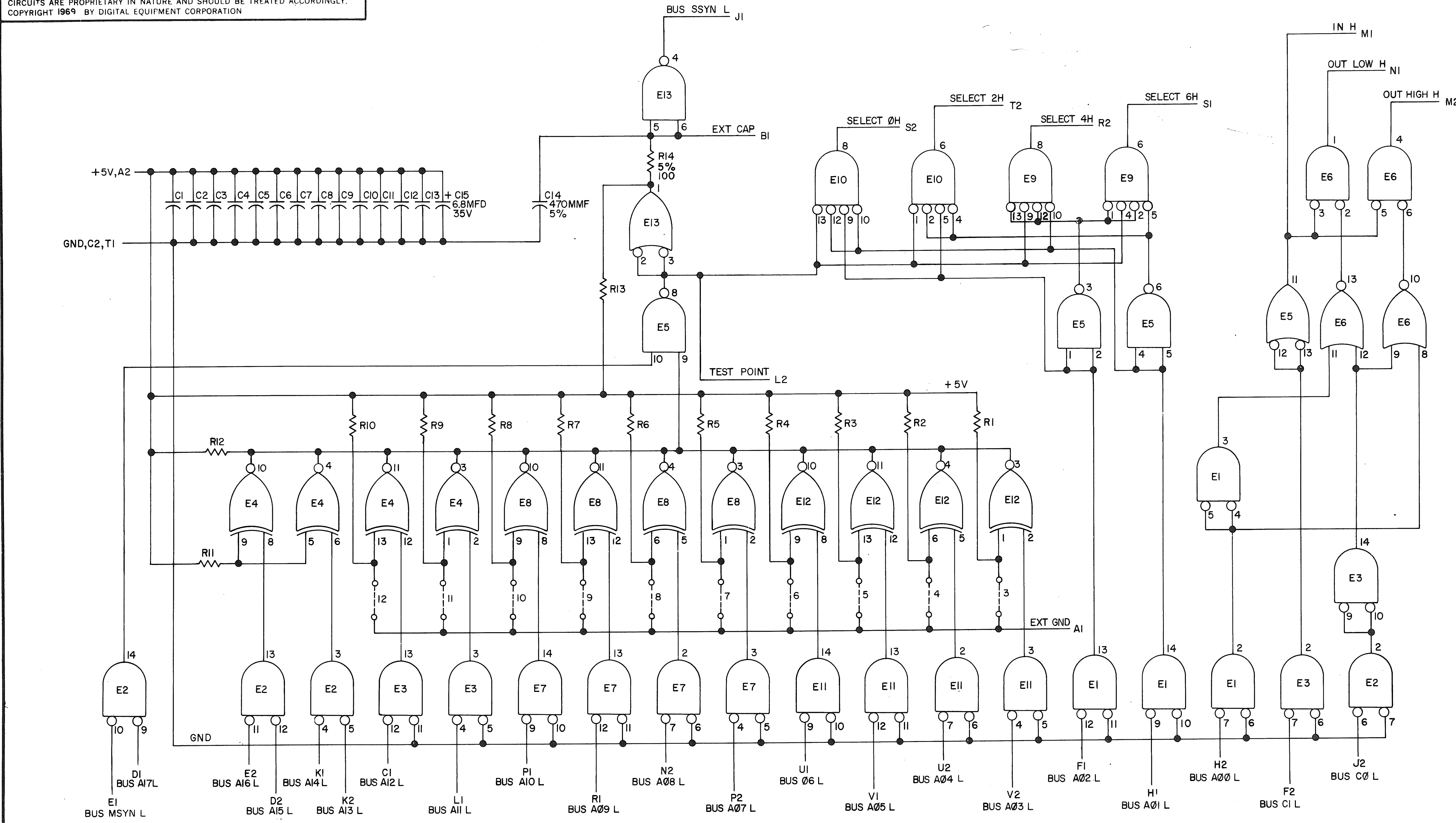

UNLESS OTHERWISE INDICATED:
o- - - -o INDICATES JUMPERS
RESISTORS ARE 1K, 1/4W, 5%
CAPACITORS ARE .01MFD, 100V, 20%
E1, E2, E3, E7, E11 ARE DEC380
E4, E8, E12 ARE DEC8242
E9, E10 ARE DEC8815
E5 IS DEC74H00
E6 IS DEC7402
E13 IS DEC8881
PIN 1 ON E1, E2, E3, E7, E11 = GND
PIN 8 ON E1, E2, E3, E7, E11 = +5V
PIN 7 ON E4, E5, E6, E8, E9, E10, E12, E13 = GND
PIN 14 ON E4, E5, E6, E8, E9, E10, E12, E13 = +5V

REVISIONS			
REV.	A	B	
CHG NO.	LR1	00002	
CHK	TS		

DRN.	DATE 11-26-69
CHK'D	DATE 1-9-70
ENG.	DATE
PROD.	DATE

TRANSISTOR & DIODE CONVERSION CHART

DEC	EIA	DEC	EIA

digital EQUIPMENT CORPORATION MAYNARD, MASSACHUSETTS

TITLE ADDRESS SELECTOR M105

SIZE	CODE	NUMBER	REV
C	CS	M105-0-1	B

PRINTED CIRCUIT REV. C

15-49-P6

DIST. 3 ... 3 PINK

32

THIS SCHEMATIC IS FURNISHED ONLY FOR TEST AND MAINTENANCE PURPOSES. THE CIRCUITS ARE PROPRIETARY IN NATURE AND SHOULD BE TREATED ACCORDINGLY.
COPYRIGHT 1969 BY DIGITAL EQUIPMENT CORPORATION

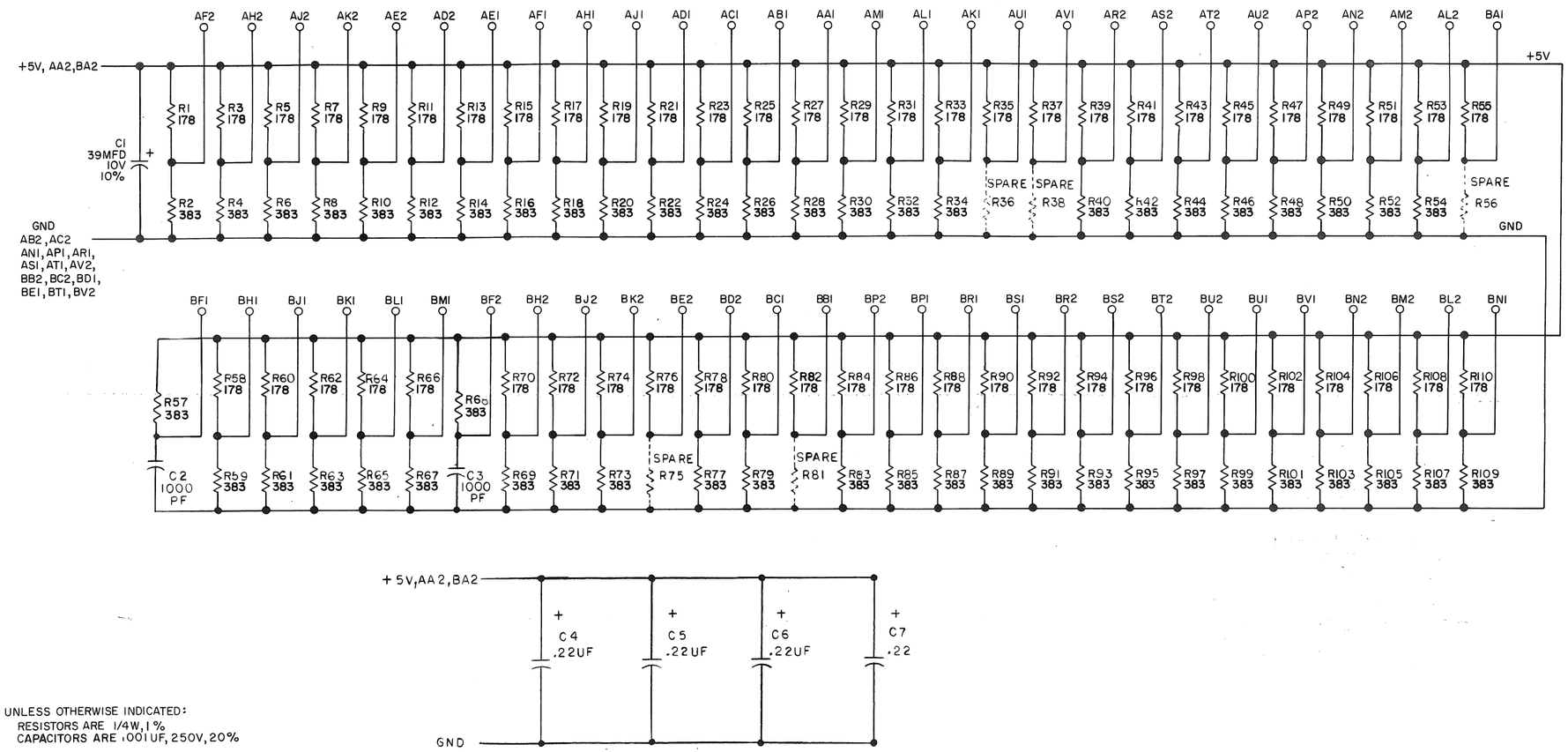

UNLESS OTHERWISE INDICATED:
RESISTORS ARE 1/4W, 1%
CAPACITORS ARE .001 UF, 250V, 20%

REVISIONS				
CHK	CHG NO.	REV.		
Final	00001	A		
	00002	B		
	00003	C		
D. i. haile 5-29-73				
P. JANSON				
	00004	D		
P. JANSON				

DRN. BUTLER	DATE 11-21-69	
CHK'D	DATE	
ENG.	DATE	
PROD.	DATE	

TRANSISTOR & DIODE CONVERSION CHART

DEC	EIA	DEC	EIA

digital EQUIPMENT CORPORATION MAYNARD, MASSACHUSETTS

TITLE BUS TERMINATOR M930

SIZE	CODE	NUMBER	REV.
C	CS	M930-0-1	D

PRINTED CIRCUIT REV. D

SIZE	CODE	NUMBER	REV.
C	CS	M930-0-1	D

DEC FORM NO. DRC 102

This drawing and specifications, herein, are the property of Digital Equipment Corporation and shall not be reproduced or copied or used in whole or in part as the basis for the manufacture or sale of items without written permission.

* SEE ALLOWABLE SUBSTITUTION LIST AND NOTE 6

PARTS REFERENCE

ITEM NO	DRAWING REFERENCE	DESCRIPTION	PART NUMBER	QUANTITY
1	E12, E18	I.C. DEC 7474	1905547	2
2	E4,E7,E17	I.C. DEC 7400	1905575	3
3	E6,E13,E14	I.C. DEC 7402	1909004	3
4	E1,E11	I.C. DEC 8640	1911469	2
5	E5	I.C. DEC 74H74	1909667	1
6	E2,E8,E9,E15,E16	I.C. DEC 8881	1909705	5
7	E3	I.C. DEC 74H04	1909931	1
8	E10	I.C. DEC 7408	1910155	1
9	C19,C20	CAP,330PF,100V,5% DM	1000023	2
10	C18	CAP,6.8M.F.D.,35V,20% TANT	1000067	1
11	C1 THRU C17	CAP,.01 M.F.D.,100V, 20% DISC	1001610	17
12	R7, R8	RES,47Ω,1/4W,5%	1300202	2
13	R1 R2	RES,390Ω,1/4W,5%	1300309	2
14	R4 R10	RES,180Ω,1/4W,5%	1301322	2
15	R3, R5, R6, R9	RES,1KΩ,1/4W,5%	1300365	4

NOTES:

1. VECTOR BIT JUMPERS MUST BE CUT FOR A "ZERO" AND MUST BE INSERTED FOR A "ONE".
2. NPR JUMPER (W9) MUST BE CUT FOR SOME PDP-11 PROCESSORS; IF THE RIGHT HALF REQUEST CIRCUIT IS USED FOR NPR'S; OR IF PIN J1 IS NOT WIRED ON THE M7821 SLOT.
3. DETAILS ON COMPONENTS ARE NOTED IN THE PARTS REFERENCE, PLACEMENT IS NOTED IN THE COMPONENT PLACEMENT DIAGRAM.
4. GND AND +5V ARE USUALLY PIN 7 AND PIN 14, RESPECTIVELY EXCEPTIONS ARE:

I C TYPE	GND	+5V
DEC 8640	PIN 1	PIN 8

5. UNLESS OTHERWISE NOTED RESISTANCE IS IN OHMS, CAPACITANCE IS IN PICOFARADS. CAPACITORS WITHOUT ANY NOTED VALUES ARE .01 MFD.
6. DEC 8640'S WERE PHASED IN AS 380 REPLACEMENTS. ANY 380 FAILURES SHOULD BE REPLACED BY 8640'S.

COMPONENT PLACEMENT

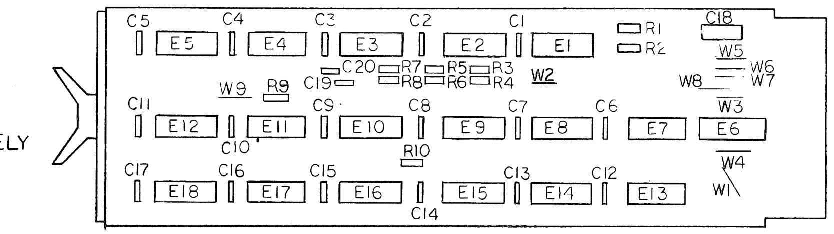

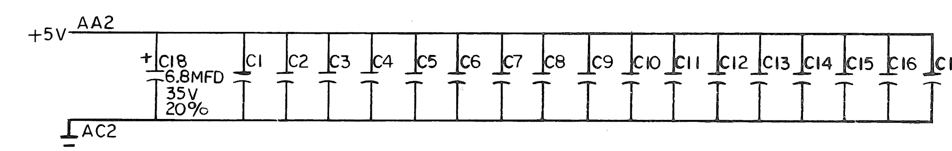

REVISIONS			
CHK	CHANGE NO.		REV.
	M7821-00001	S. ROTHMAN 4-13-72	B
	M7821-00002	S. ROTHMAN 7-24-73	C
	M7821-00003	L. CONDON	D

DEC FORM NO. DRD 102A

FIRST USED ON OPT/MOD	QTY.	DESCRIPTION	PART NO.	ITEM NO.
11/20		PARTS LIST		

UNLESS OTHERWISE SPECIFIED
DIMENSION IN INCHES
TOLERANCES
DECIMALS ± .005 FRACTIONS ± 1/64 ANGLES ± 0°30'
FINAL SURFACE QUALITY ✓
REMOVE BURRS AND BREAK SHARP CORNERS

MATERIAL —//—
FINISH —//—

		DATE
DRN.		
CHK'D.		9-29-71
ENG.		9-29-71
PROJ. ENG.		9-29-71
PROD.		

NEXT HIGHER ASSY —//—
SCALE —//—
SHEET 1 OF 2

digital EQUIPMENT CORPORATION MAYNARD, MASSACHUSETTS

TITLE: INTERRUPT CONTROL M7821

SIZE	CODE	NUMBER	REV.
D	CS	M7821-Ø-1	D

DIST.

This drawing and specifications, herein, are the property of Digital Equipment Corporation and shall not be reproduced or copied or used in whole or in part as the basis for the manufacture or sale of items without written permission.

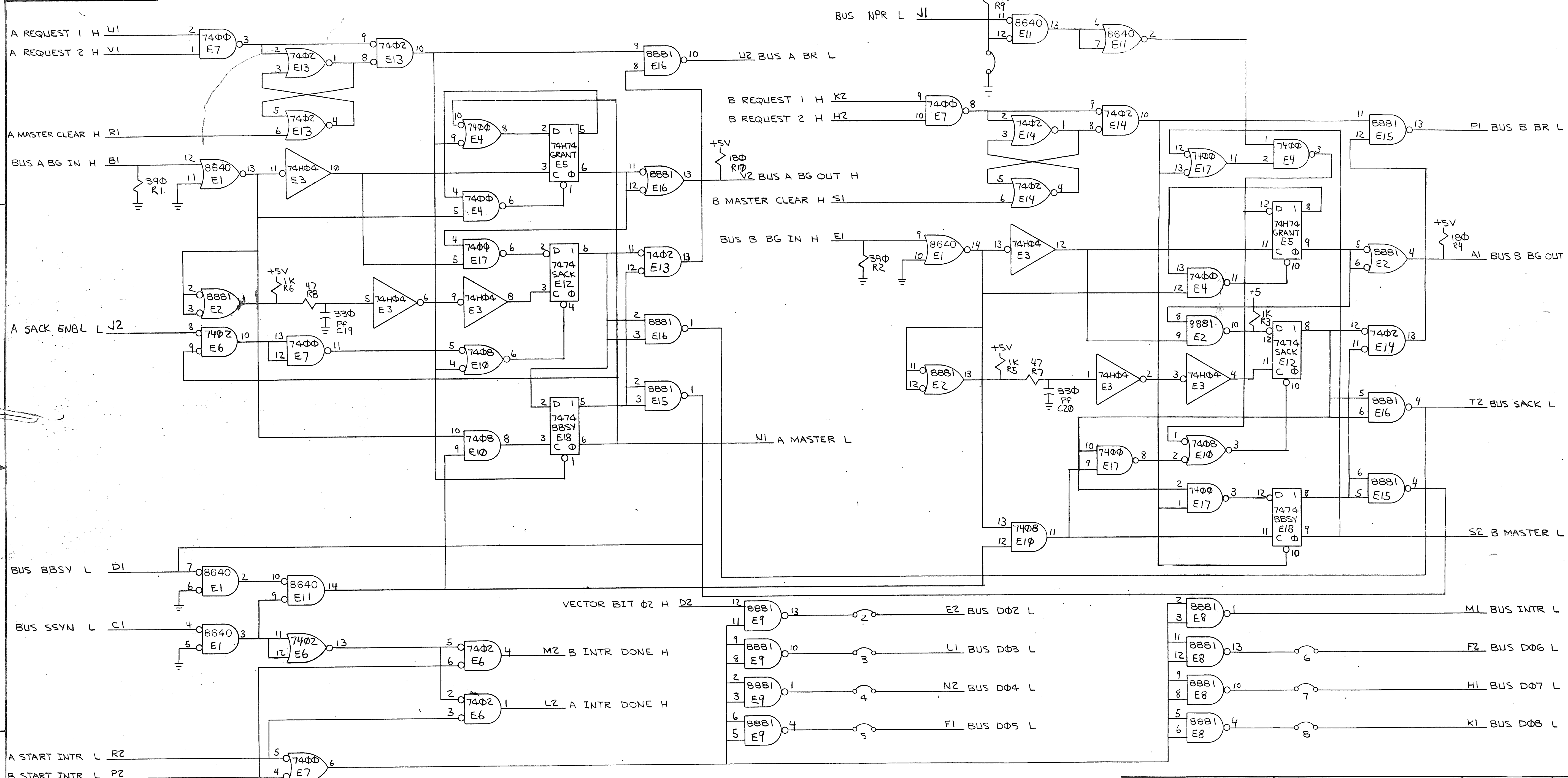

QTY	REF DESIGNATION	DESCRIPTION	PART NO.	ITEM NO.

PARTS LIST

ETCH BOARD REV B

DEC NO.	EIA NO.	DEC NO.	EIA NO.

SEMICONDUCTOR CONVERSION CHART

B ORIGINATED — CHANGE NO. — REVISIONS — REV — CHK

DRN. [signature] DATE 28 Sep 71
CHK'D. [signature] DATE
ENG. [signature] DATE 9-29-71
PROJ. ENG. [signature] DATE 9-29-71
PROD. [signature] DATE
NEXT HIGHER ASSY —
SCALE
SHEET 2 OF C

digital EQUIPMENT CORPORATION MAYNARD, MASSACHUSETTS

TITLE
INTERRUPT CONTROL M7821

SIZE D CODE CS NUMBER M7821-Ø-1 REV. D
DIST.

This drawing and specifications, herein, are the property of Digital Equipment Corporation and shall not be reproduced or copied or used in whole or in part as the basis for the manufacture or sale of items without written permission.

DIGITAL EQUIPMENT CORPORATION
MAYNARD, MASSACHUSETTS

ENGINEERING SPECIFICATION

DATE 1/4/73

TITLE BUS INTERFACE BB11-H

REVISIONS

REV	DESCRIPTION	CHG NO	ORIG	DATE	APPD BY	DATE
A	CHANGE PER ECO	BB11H-00001	FITCH	5/73	R Cohen	5/23/73

ENG	APPD	SIZE	CODE	NUMBER	REV
Oliver Mobisson	P. Mont Jan 73	A	SP	BB11-H-8	A

DEC 16-(392)-1079-N971
DRA 107

ENGINEERING SPECIFICATION digital CONTINUATION SHEET

TITLE BUS INTERFACE BB11-H

TABLE OF CONTENTS

1.0 GENERAL DESCRIPTION

2.0 PURPOSE

3.0 MODULE DESCRIPTION

3.1 Introduction to M1500 Series Modules

3.1.1 Bus Gates Module (M15ØØ)

3.1.2 Bus Input Interface Module (15Ø1)

3.1.3 Bus Output Interface (M15Ø2)

3.1.4 How M15ØØ Series Provides PDP-11 UNIBUS Interfacing

4.0 CABLES

4.1 Cable Connector for User's Equipment

4.2 Tools

5.0 BB11-H PREWIRED BACKPLANE INTERFACE SYSTEM UNIT

TABLE 1 WORST CASE BUS LOADS

SIZE	CODE	NUMBER	REV
A	SP	BB11-H-8	A

DEC FORM NO DEC 16—(381)—1022—N370
DRA 108

1.0 GENERAL DESCRIPTION

The BB11 Prewired Backplane Interface System Units are designed to offer maximized interfacing capability at lower cost per function between the user's peripheral devices (equipment) and the PDP-11 computer.

2.0 PURPOSE

When any of these prewired backplanes is combined with the associated modules, the PDP-11 Interface System Unit thus generated shall enable the processor to communicate with peripheral devices by reading in the appropriate number of 16-bit data words and/or by sending out the related number of 16-bit data words. Provisions shall also be included which will enable computer interrupts to be made at pre-assigned (hard-wired) priority levels.

3.0 MODULE DESCRIPTION

3.1 Introduction to M1500 Series Modules

Three new modules have been developed by Logic Products for interfacing user devices to the PDP-11, and PDP-8e - 8/m computers with a greater degree of flexibility and at a lower cost to the customer. They are the M15ØØ Bus Gates module, M15Ø1 Bus Input Interface module, and the M15Ø2 Bus Output Interface module. These modules contain TTL, 10 MHz logic and are full 16-bit word oriented for use with the PDP-11 and PDP-8/e on a one module-per-word basis. They also contain the required receivers and/or drivers for bus connection. All three modules plug into standard bus expansion hardware.

3.1.1 Bus Gates Module (M15ØØ)

M15ØØ contains accessory gates which may be used to implement a variety of functions in conjunction with the M15Ø1 and M15Ø2.

....Four gates may be used as bus drivers or open-collector drivers by cutting out appropriate jumpers....

....Four gates may be used as bus receivers.

....Additional and/or gates.

All have high-drive outputs with a minimum 25 unit load capability. The M15ØØ utilizes a single height, single width, extended length circuit board.

3.1.2 Bus Input Interface Module (M15Ø1)

M15Ø1 contains 16-bus drivers with a common enabling gate. Drivers receive external data signals via a 4Ø-conductor cable connector that is mounted on the card. Two D-type flip-flops are provided. One may be an Interrupt Request Enable Flag or one-bit Control and Status Register (SCR), and the second may be set by the peripheral device via the same external signal cable (extra pins) and triggered with either a high or low going transition. By using several modules, input can be easily expanded, thus providing a mulitplexer capability. M15Ø1 utilizes a single-height, single-width, extended-length circuit board.

3.1.3 Bus Output Interface (M15Ø2)

M15Ø2 contains 16 bus receivers and a 16-bit flip-flop storage register. This register is organized into two 8-bit bytes with separate enabling gates for each byte. Output of flip-flop registers is simultaneously available through wire wrap pins on the back panel with a 10-unit load drive capability as well as to a 40-conductor cable connector mounted on the card. The latter outputs have a 1K-ohm pull-up register which allows a 20-unit load drive output capability. Resistors may be cut out to give an open-collector configuration which will drive up to +30 volts at up to 40 mA. Three additional flip-flops may provide Interrupt Enable, Interrupt Request and Data Ready Flags. Two have output via the external cable connector and the backplane pins simultaneously. All three flags may be loaded with bus data. The external cable connector has two extra pins

that are assignable by the user to any wire wrap pin. M15Ø2 utilizes a double-height, single-width, extended-length circuit board.

3.1.4 How M15ØØ Series Provides PDP-11 UNIBUS Interfacing

One M15Ø1 module contains all of the bus drivers required to read one 16-bit, TTL word from a user device into the PDP-11. One M15Ø2 module contains all of the bus receivers and buffer registers required to transfer two 8-bit bytes from the PDP-11 to a user device at a wide variety of voltage and current levels. M15ØØ provides extra gate configurations if needed, depending on the complexity of the interface. A basic non-interrupt, program-controlled system that would read one word into the PDP-11 and transfer one word out to a user device would consist of only one M15Ø1, one M15Ø2 and an Address Selector module M1Ø5. This basic system can easily be expanded to allow any number of peripherals to be handled. Each M1Ø5 Address Selector module that is used will select up to four M15Ø1 Bus Input Interface modules or up to four M15Ø2 Bus Output Interface modules.

The D-type flip-flops are used as Control and Status Registers to control peripheral functions and enable an interrupt via an M7821 Interrupt Control module. Each M7821 module that is used may give the interface a dual interrupt capability on two different priority levels and will provide the Central Processor with two vector addresses for peripheral servicing subroutines. The M7821 will also make a Non-Processor Request for a DMA transfer.

4.0 CABLES

There are presently two types of cables available for use with the M1501 and M1502 modules. Both are fabricated from 40-conductor flat cable (DEC 17-00004) but are terminated somewhat differently.

Double-Ended Cable - Terminated with DEC standard connectors (H856) on both ends.

H856 H856

BC08R

PART NO.	LENGTH	DESCRIPTION
BC08R-01	1'	40 Cond. Flat
BC08R-06	6'	40 Cond. Flat
BC08R-08	8'	40 Cond. Flat
BC08R-10	10'	40 Cond. Flat
BC08R-12	12'	40 Cond. Flat
BC08R-20	20'	40 Cond. Flat
BC08R-25	25'	40 Cond. Flat
BC08R-50	50'	40 Cond. Flat
BC08R-60	60'	40 Cond. Flat
BC08R-100	100'	40 Cond. Flat
BC08R-130	130'	40 Cond. Flat
BC08R-160	160'	40 Cond. Flat

Single-Ended Cable - for custom applications this cable has DEC standard connector (H856) on one end only.

BC04Z

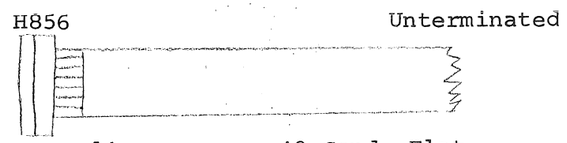

BC04Z-01	1'	40 Cond. Flat
BC04Z-06	6'	40 Cond. Flat
BC04Z-10	10'	40 Cond. Flat
BC04Z-15	15'	40 Cond. Flat

PART NUMBER	LENGTH	DESCRIPTION
BC04Z-25	25'	40 Cond. Flat
BC04Z-50	50'	40 Cond. Flat

4.1 Cable Connector for User's Equipment

The I/O connector (male) on the M1501 and M1502 boards is available under Part No. H854 for customers requiring it.

4.2 Tools

No special tools are required for the basic interface kits. Should you need to do custom wire wrapping, the following tools are available from DEC:

DESCRIPTION	P/N
Hand Wrapping Tool (#30)	H811A
Hand Unwrapping Tool (#30)	H812A
Pistol Grip Hand Wrapping Tool (#30)	H810A
Wire Wrapping Wire, 1000' (#30)	935

5.0 PREWIRED BACKPLANE SYSTEM UNITS BB11-H

The BB11-H prewired backplane shall be one of the PDP-11 interface system units designed to interface between the user's peripheral devices (equipment) and the PDP-11 processor. When combined with the associated modules the BB11 H shall provide up to a maximum of four 16-bit data words IN and a maximum of four 16-bit data words OUT with a maximum of four Interrupts from the INPUT devices to PDP-11. The BB11-H UNIBUS Connection and module utilization shall be as follows:

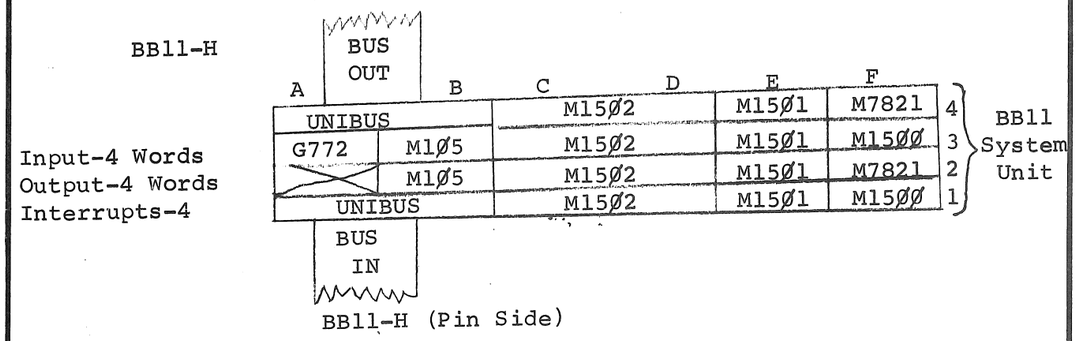

5.1 Input Words

Each of the four input words from the user's equipment shall be coupled to PDP-11 via M1501 Bus Input Interface modules with their associated I/O Connectors - one M15Ø1 module for each 16-bit Input Data Word.

5.2 Output Words

Each of the four output words from the PDP-11 shall be routed to the user's equipment via M15Ø2 Bus Output Interface Modules with their associated I/O Connectors - with one M15Ø2 module associated with one 16-bit output data word.

5.3 Interrupt Facility

The Interrupt Request (a high-going signal) shall be made via Pin X of the I/O Connector of each M15Ø1 module and shall be connected to Pin H2 of the module to set the RQ flip-flop.

5.4 Bus Requests

Bus Requests from M15Ø1 #1 in Slot EØ1 and M15Ø1 #2 in Slot EØ2 shall be controlled by M7821 Interrupt Control Module in Slot FØ2 and shall be made at Priority Level 5. The M15Ø1 #1 Slot EØ1 shall have a slightly higher priority than the M15Ø1 #2 in Slot EØ2 and also shall have the lower of the two

vector addresses.

Similarly Bus Requests from M15Ø1 #3 in Slot EØ3 and M15Ø1 #4 in Slot EØ4 shall be controlled by M7821 Interrupt Control Module in Slot FØ4 and shall be made at Priority Level 6 with the M15Ø1 #3 in Slot EØ3 slightly higher in priority then the M15Ø1 #4 in Slot EØ4 and also shall have the lower of the two vector addresses.

5.5 Vector Addresses

The four vector addresses and two device addresses shall be left unassigned. Further all unused inputs of active gates on flip-flops shall be connected to the proper unassigned logic levels.

5.6 Address Selection

The M1Ø5 Address Selector Module in Slot BØ2 shall control the four M15Ø1 Bus Input Interface Modules used to Read In the four 16-bit Input data words. Similarly the M1Ø5 Address Selector Module in Slot BØ3 shall control the four M15Ø2 Bus Output Interface modules used to Read Out the four 16-bit Output data words.

5.7 Clocking Signal

The four M15Ø1 RØE flip-flops shall all be clocked by a single signal, CLK CSR H, generated from Select ØØ H and Out Low Ø H with the use of M15ØØ Bidirectional Bus Interfacing Gates module. DØ through D3 shall determine the state of M15Ø1 #1 through M15Ø1 #4 flip-flops respectively.

5.8 Address Selector Wiring

The M1Ø5 Address Selector modules addresses shall be wired as follows:

ADDRESS	CONTROL	FUNCTION
76XXØØ	IN	Read in data via M15Ø1 #1 *Slot EØ1
76XXØ2	IN	Read in data via M15Ø1 #2 *Slot EØ2
76XXØ4	IN	Read in data via M15Ø1 #3 *Slot EØ3
76XXØ6	IN	Read in data via M15Ø1 #4 *Slot EØ4
76XX1Ø	OUT	Read out data via M15Ø2 #1 Slot C&DØ1
76XX12	OUT	Read out data via M15Ø2 #2 Slot C&DØ2
76XX14	OUT	Read out data via M15Ø2 #3 Slot C&DØ3
76XX16	OUT	Read out data via M15Ø2 #4 Slot C&DØ4
76XXØØ	OUT LOW	Clock the four M15Ø1 RQE flip-flops

* This signal also clears the RQ flip-flop that is associated with each M15Ø1.

TABLE I

WORST CASE BUS LOADS (BB11-H)

BUS LINES AFFECTED	BUS LOAD UNITS
BUS DATA <Ø - 15>	4
BUS ADDRESS <Ø - 17>	2
BUS INIT	1
BUS MSYN	2
BUS CIL	2
BUS CØL	2
BUS GRANT 5 IN H	1
BUS SSYN	2
BUS GRANT 5 OUT	1
BUS NPR	2
BUS GRANT 6 IN H	1
BUS GRANT 6 OUT	1
BUS BR5	1
BUS SACK	2
BUS BUSY	2
BUS INTR	1
BUS BR6	1

This drawing and specifications, herein, are the property of Digital Equipment Corporation and shall not be reproduced or copied or used in whole or in part as the basis for the manufacture or sale of items without written permission.

DIGITAL EQUIPMENT CORPORATION
MAYNARD, MASSACHUSETTS

ENGINEERING SPECIFICATION

DATE 8/31/73

TITLE BB11-H INSTALLATION PROCEDURE

REVISIONS

REV	DESCRIPTION	CHG NO	ORIG	DATE	APPD BY	DATE
A	CHANGE PER ECO	BB11H-00004	TUNNESSEN	12/73	R. Fatel	74-1-15

ENG	APPD	SIZE	CODE	NUMBER	REV
Robert Fatel 73-8-31	F [illegible] 8/31/73	A	SP	BB11-H-9	A

ENGINEERING SPECIFICATION digital CONTINUATION SHEET

TITLE BB11-H INSTALLATION PROCEDURE

BB11-H INSTALLATION PROCEDURE

S C O P E

1.0 Prerequisites

2.0 Accessories

3.0 System Integration

4.0 Visual Inspection

5.0 Special Wiring

6.0 Device Address Selection (M105)

7.0 Vector Address Selection (M7821)

8.0 Installation

SIZE	CODE	NUMBER	REV
A	SP	BB11-H-9	A

S C O P E

The scope of this document is to describe the procedure for installation of a BB11-H in a PDP-11 system. It lists prerequisites, accessories and procedures for getting the BB11-H "on line".

1.0 PREREQUISITES

1.1 PDP-11 Processor

1.2 UNIBUS Connection (See Accessories)

1.3 Kit11-HT

This is a prerequisite for field service installation or maintenance.

1.4 System unit must be Revision B or higher.

2.0 ACCESSORIES

2.1 UNIBUS Connection

One internal UNIBUS connector M920 is required when a BB11-H is mounted in a cabinet containing other system units. One UNIBUS cable BC11A-XX, of correct length, is required when a BB11-H is the first unit in an expansion box. These items are not supplied as part of a BB11-H and must be ordered separately.

2.2 I/O Cables

One I/O cable BC08R-XX (H856 Connector to H856 Connector) or BC04Z-XX (H856 Connector to open end), of correct length, is advised for each 16-bit input data word and one is advised for each 16-bit output data word. These also must be ordered separately.

3.0 SYSTEM INTEGRATION

When installing a BB11-H in a PDP-11 system a through analysis should be made of how the system will be effected.

3.1 UNIBUS Loading

A fully configured BB11-H, as Kit11-H is, presents four (4) bus loads to the UNIBUS. A PDP-11 UNIBUS can drive twenty (20) bus loads before a bus repeater is needed.

3.2 Power Supply Loading

A fully configured BB11-H can draw almost four (4) amperes. Be sure the supply being used has enough current available.

3.3 Physical Mounting

Be sure there is mounting space available either in the PDP-11 or an expansion box.

4.0 VISUAL INSPECTION

4.1 Check the parts received against the parts ordered to be sure there are no shortages.

4.2 Check for physical damage, i.e. broken casting, mounting blocks, modules.

4.3 Look down through the wire-wrap pins to see that none are bent and touching each other.

5.0 SPECIAL WIRING

Special wiring is required when a BB11-H is not fully configured, i.e. less than four words in, four words out, and four interrupts.

If UNIBUS interrupt control module M7821 is not installed in Slot FØ2, Bus Grant continuity must be provided by jumpering Pin FØ2-B1 to FØ2-A1. If UNIBUS interrupt control module M7821 is not installed in Slot FØ4, jumper Pin FØ4-B1 to Pin FØ4-A1.

If a bus input interface module M1501 is not installed in Slot E01, E02, E03, and/or E04, Pins E01-D1, E02-D1, E03-D1, and/or E04-D1 must be jumpered to ground.

6.0 DEVICE ADDRESS SELECTION (M105)

Cut the jumpers on the M105 address selector module for the bits that are to be decoded as "ones" in the device address. Start normal user addresses at 764,000 and assign upward. The next sequential address selector module will be coded for address 764,010.

Address 764000 is selected by cutting only the jumper for bit eleven (11). Address 764010 is selected by cutting the jumpers for bits eleven (11) and three (3).

The M105 in Slot BØ2 is for the four input modules and the one in BØ3 is for the output modules.

7.0 VECTOR ADDRESS SELECTION (M7821)

Cut the jumpers on the M7821 interrupt control module for the bits that are to be decoded as "zeros" in the vector address. Addresses 170, 174, 270, and 274 are reserved for users.

Addresses 170 and 174 are selected by cutting jumpers for bits 7 and 8. Addresses 270 and 274 are selected by cutting jumpers for bits 6 and 8.

8.0 INSTALLATION

8.1 Referring to the module utilization print, plug the modules into their respective slots.

8.2 Mount the BB11-H in the cabinet.

8.3 Install the UNIBUS cables, connectors and terminators as necessary. Slot ABØ1, Input; Slot ABØ4, Output or terminator.

8.4 Connect the power to Slot A03 with the G772 supplied with the cabinet.

#500
3