RSG
Personal Copy

SIZE	CODE	NUMBER	REV
B	DD	M7606-0-0	C

DRAWING NO.	NO OF SHTS	PART NO.	DESCRIPTION	REVISIONS															
		M7606	KA630	B1	C1	D1													
D-UA-M7606-0-0	1		KA630 UNIT ASSEMBLY	A	A	B													
K-PL-M7606-0-DBP	2		KA630 PARTS LIST	A	B	C													
K-PC-M7606-0-DBJ	1		P.C. DESIGN DATA BASE	E	E	E													
		5016523-01	ETCHED CIRCUIT BOARD	E1	E1	E1													
B-DD-5016523-0-0	1		DRAWING DIRECTORY	A	A	A													
B-CS-M7606-0-1	1		M7606 DRAWING DIRECTORY	-	B	B													
B-CS-M7606-0-2	1		MICROVAX II SYSTEM	-	B	B													
B-CS-M7606-0-3	1		KA630-UVAX ON Q22 BUS	-	B	B													
B-CS-M7606-0-4	1		UVAX & FPU	-	B	B													
B-CS-M7606-0-5	1		UVAX & FPU PINOUTS	-	-	-													
B-CS-M7606-0-6	1		ADDRESS LATCH/LOCAL MEMORY DECODE	-	B	B													
B-CS-M7606-0-7	1		MEMORY SUBSYSTEM	-	B	B													
B-CS-M7606-0-8			Q22 BUS INTERFACE GATE ARRAY	-	B	B													
B-CS-M7606-0-9	1		Q22 BUS INTERFACE GATE ARRAY	-	B	B													
B-CS-M7606-0-10	1		DC380 PAD ASSIGNMENT TOP VIEW LL5320 IN 144 PIN GRID ARRAY	-	B	B													
B-CS-M7606-0-11	1		REFRESH LOGIC/COUNTER	-	B	B													
B-CS-M7606-0-12	1		DIVIDE BY 12	-	B	B													
B-CS-M7606-0-13	1		SYNCHRONOUS 3 BIT COUNTER	-	B	B													

NOTES:

REVISION HISTORY																	
REV.	A	B	C														
ECO NO.	INIT	ML001	ML002														
DATE	5/84	5/85	6/85														

THIS DRAWING AND THE SPECIFICATIONS CONTAINED HEREIN ARE CONFIDENTIAL AND PROPRIETARY. THEY ARE THE PROPERTY OF DIGITAL EQUIPMENT CORPORATION AND SHALL NOT BE REPRODUCED OR COPIED OR USED IN WHOLE OR IN PART AS THE BASIS FOR THE MANUFACTURE OR SALE OF ITEMS WITHOUT WRITTEN PERMISSION. THIS IS AN UNPUBLISHED WORK PROTECTED UNDER THE FEDERAL COPYRIGHT LAWS. 1984

digital

DRN. D.DROZD	DATE 5/17/84	TITLE KA630	
CHK'D E.LANDRY	DATE 5/17/84		
DES. ENG B.MASKAS	DATE 5/17/84	DOCUMENT NUMBER	
RESP. ENG. B.MASKAS	DATE 5/17/84	SIZE B / CODE DD / NUMBER M7606-0-0	REV. C
MFG. ENG. B.SCHULTE	DATE 9/24/84	SHEET 1 OF 4	

DRB 126C
EN-01242-16-REVA(396)

SIZE	CODE	NUMBER	REV
B	DD	M7606-0-0	C

DRAWING NO.	NO OF SHTS	PART NO.	DESCRIPTION	REVISIONS															
B-CS-M7606-0-14	1		VECTOR HACK	-	B	B													
B-CS-M7606-0-15	1		INVERTING MUX LOGIC	-	B	B													
B-CS-M7606-0-16	1		4 to 1 MUX	-	B	B													
B-CS-M7606-0-17	1		Q-BUS SUPPORT LOGIC	-	B	B													
B-CS-M7606-0-18	1		BLK MD CTR LOGIC	-	B	B													
B-CS-M7606-0-19	1		TOGGLE FLOP	-	B	B													
B-CS-M7606-0-20	1		Q-BUS SUPPORT LOGIC	-	B	B													
B-CS-M7606-0-21	1		Q-BUS SUPPORT LOGIC	-	B	B													
B-CS-M7606-0-22	1		Q-BUS SUPPORT LOGIC	-	B	B													
B-CS-M7606-0-23	1		Q-BUS SUPPORT LOGIC	-	B	B													
B-CS-M7606-0-24	1		POWER BUFFER MACRO	-	B	B													
B-CS-M7606-0-25	1		BIDIRECT BUFFER	-	B	B													
B-CS-M7606-0-26	1		MUX LOGIC	-	B	B													
B-CS-M7606-0-27	1		TRANSLATION MAP GROUP	-	B	B													
B-CS-M7606-0-28	1		KA630 Q-BUS INTERFACE	-	B	B													
B-CS-M7606-0-29	1		UVAX INTERFACE GATE ARRAY	-	B	B													
B-CS-M7606-0-30	1		DC379 PAD ASSIGNMENT TOP-VIEW LL5320 IN 144 PIN GRIP ARRAY	-	B	B													
B-CS-M7606-0-31	1		UVAX INTERFACE GATE ARRAY DATA PATH	-	B	B													
B-CS-M7606-0-32	1		UVDAL I/O BUFFERS, ADDR LATCHES	-	B	B													

NOTES:

REVISION HISTORY				
REV.	A	B	C	
ECO NO.	INIT	ML001	ML002	
DATE	5/84	5/85	6/85	

THIS DRAWING AND THE SPECIFICATIONS CONTAINED HEREIN ARE CONFIDENTIAL AND PROPRIETARY. THEY ARE THE PROPERTY OF DIGITAL EQUIPMENT CORPORATION AND SHALL NOT BE REPRODUCED OR COPIED OR USED IN WHOLE OR IN PART AS THE BASIS FOR THE MANUFACTURE OR SALE OF ITEMS WITHOUT WRITTEN PERMISSION. THIS IS AN UNPUBLISHED WORK PROTECTED UNDER THE FEDERAL COPYRIGHT LAWS. 1984

digital

DRN. D.DROZD	DATE 5/17/84	TITLE KA630	
CHK'D E.LANDRY	DATE 5/17/84		
DES. ENG. B.MASKAS	DATE 5/17/84	DOCUMENT NUMBER	
RESP. ENG. B.MASKAS	DATE 5/17/84	SIZE B / CODE DD / NUMBER M7606-0-0	REV C
MFG. ENG. B.SCHULTE	DATE 9/24/84	SHEET 2 OF 4	

DRB 126C
EN-01242-16-REVA(396)

SIZE	CODE	NUMBER	REV
B	DD	M7606-0-0	C

DRAWING NO.	NO OF SHTS	PART NO.	DESCRIPTION	REVISIONS		
B-CS-M7606-0-33	1		ADDRESS DECODER	-	B	B
B-CS-M7606-0-34	1		EXCEPTIONS AND INTERRUPTS	-	B	B
B-CS-M7606-0-35	1		UVAX INPUTS AND I/O PINS	-	B	B
B-CS-M7606-0-36	1		BOOT/DIAG REG., MEM ERR ADDR REG.	-	B	B
B-CS-M7606-0-37	1		EPR BUS, X DAL BUS	-	B	B
B-CS-M7606-0-38	1		INTERNAL DATA BUSES	-	B	B
B-CS-M7606-0-39	1		MISC. CONTROL STROBES	-	B	B
B-CS-M7606-0-40	1		RESET COUNTER, POWER UP/DOWN CNTRL	-	B	B
B-CS-M7606-0-41	1		MEMORY SYSTEM ERROR REGISTER	-	B	B
B-CS-M7606-0-42	1		TIME OF YEAR (TOY) CLOCK	-	B	B
B-CS-M7606-0-43	1		CONSOLE SERIAL LINE INTERFACE	-	B	B
B-CS-M7606-0-44	1		LEDS AND CONFIGURATION CONNECTOR	-	B	B
B-CS-M7606-0-45	1		DECOUPLING CAPACITORS	-	B	B
B-CS-M7606-0-46	1		KA630 STATE MACHINES	-	B	B
B-CS-M7606-0-47	1		UVAX CYCLE CONTROLLER	-	B	B
B-CS-M7606-0-48	1		MEMORY SEQUENCER	-	B	B
B-CS-M7606-0-49	1		MEMORY SEQUENCER SUPPORT	-	B	B
B-CS-M7606-0-50	1		Q22 BUS STATE MACHINES	-	B	B
B-CS-M7606-0-51	1		KA630 MEMORY ARBITER LISTING	-	-	

NOTES:

REVISION HISTORY				
REV.	A	B	C	
ECO NO.	INIT	ML001	ML002	
DATE	5/84	5/85	6/85	

THIS DRAWING AND THE SPECIFICATIONS CONTAINED HEREIN ARE CONFIDENTIAL AND PROPRIETARY. THEY ARE THE PROPERTY OF DIGITAL EQUIPMENT CORPORATION AND SHALL NOT BE REPRODUCED OR COPIED OR USED IN WHOLE OR IN PART AS THE BASIS FOR THE MANUFACTURE OR SALE OF ITEMS WITHOUT WRITTEN PERMISSION. THIS IS AN UNPUBLISHED WORK PROTECTED UNDER THE FEDERAL COPYRIGHT LAWS. 1984

digital

DRN. D.DROZD	DATE 5/17/84	TITLE KA630	
CHK'D E.LANDRY	DATE 5/17/84	DOCUMENT NUMBER	
DES. ENG. B.MASKAS	DATE 5/17/84	SIZE B / CODE DD / NUMBER M7606-0-0	REV. C
RESP. ENG. B.MASKAS	DATE 5/17/84		
MFG. ENG. B.SCHULTE	DATE 9/24/84	SHEET 3 OF 4	

DRB 126C
EN-01242-16-REVA(388)

SIZE	CODE	NUMBER	REV
B	DD	M7606-0-0	C

DRAWING NO.	NO OF SHTS	PART NO.	DESCRIPTION	REVISIONS		
B-CS-M7606-0-52	1		KA630 MEMORY SYSTEM ARBITER STATE FLOW DIAGRAMS	-	B	B
B-CS-M7606-0-53	1		KA630 MEMORY SYSTEM ARBITER STATE FLOW DIAGRAMS	-	B	B
B-CS-M7606-0-54	1		KA630 LOCAL I/O CONTROL MACHINE		/	
			UL TESTING	-	-	-
B-CS-M7606-0-55	1		KA630 LOCAL I/O BUS CONTROL	-	B	B
B-CS-M7606-0-56	1		KA630 Q-BUS ARBITRATION CONTROL MACHINE LISTING	-	-	-
B-CS-M7606-0-57	1		Q-BUS ARBITRATION CONTROLLER DETAILED CONTROL FLOW DIAGRAM	-	B	B
B-CS-M7606-0-58	1		Q22 BUS MASTER CONTROL MACHINE LISTING	-	-	-
B-CS-M7606-0-59	1		Q22 BUS MASTER CONTROL MACHINE FLOW DIAGRAM	-	B	B
B-CS-M7606-0-60	1		Q22 BUS SLAVE CONTROL MACHINE LISTING	-	-	-
B-CS-M7606-0-61	1		Q22 BUS SLAVE CONTROL MACHINE FLOW DIAGRAM	-	B	B
B-CS-M7606-0-62	1		Q22 BUS SLAVE CONTROL MACHINE FLOW DIAGRAM	-	B	B
B-CS-M7606-0-63	1		IKKL RAS DECODE FROM (ETS) LISTING	-	-	-
B-CS-M7606-0-64	1		PALASM LISTING FOR PALISLSA DEVICES	-	-	-
B-CS-M7606-0-65	1		MNEMONIC DICTORY	-	-	-
K-DO-M7606-0-0	24		M7606 CROSS REF LIST	-	A	A

NOTES:

REVISION HISTORY			
REV.	A	B	C
ECO NO.	INIT	ML001	ML002
DATE	5/84	5/85	6/85

THIS DRAWING AND THE SPECIFICATIONS CONTAINED HEREIN ARE CONFIDENTIAL AND PROPRIETARY. THEY ARE THE PROPERTY OF DIGITAL EQUIPMENT CORPORATION AND SHALL NOT BE REPRODUCED OR COPIED OR USED IN WHOLE OR IN PART AS THE BASIS FOR THE MANUFACTURE OR SALE OF ITEMS WITHOUT WRITTEN PERMISSION. THIS IS AN UNPUBLISHED WORK PROTECTED UNDER THE FEDERAL COPYRIGHT LAWS. 1984

digital

DRN. D.DROZD	DATE 5/17/84	TITLE KA630	
CHK'D E.LANDRY	DATE 5/17/84	DOCUMENT NUMBER	
DES. ENG B.MASKAS	DATE 5/17/84		
RESP. ENG. B.MASKAS	DATE 5/17/84	SIZE B / CODE DD / NUMBER M7606-0-0	REV. C
MFG. ENG B.SCHULTE	DATE 9/24/84	SHEET 4 OF 4	

DRB 126C
EN-01242-16-REVA(396)

THIS DRAWING AND SPECIFICATIONS, HEREIN, ARE THE PROPERTY OF DIGITAL EQUIPMENT CORPORATION AND SHALL NOT BE REPRODUCED OR COPIED OR USED IN WHOLE OR IN PART AS THE BASIS FOR THE MANUFACTURE OR SALE OF ITEMS WITHOUT WRITTEN PERMISSION.
COPYRIGHT © 1984 DIGITAL EQUIPMENT CORPORATION

REWORK INSTRUCTIONS

1. COMPONENT DELETES
   - 2-1 DELETE E21 P/N 23035E6-00
   - 2-2 DELETE E22 P/N 23034E6-00
2. COMPONENT ADDS.
   - 2-3 DELETE E21 P/N 23063E6-00
   - 2-4 DELETE E22 P/N 23062E6-00

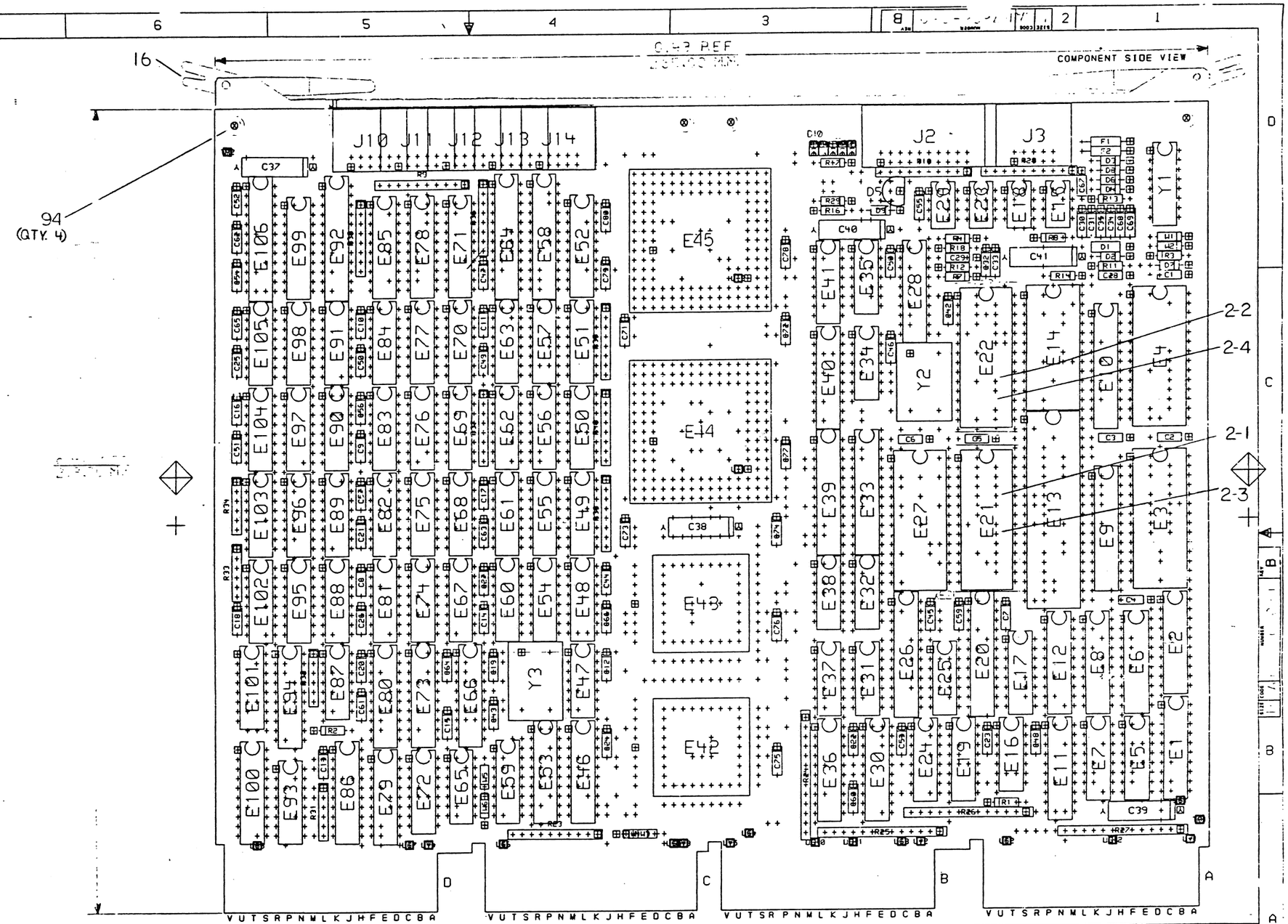

NOTES: 1. W1 NOT INSTALLED

STEP ↑	Y AXIS	STEP	TIMES
REPEAT →	X AXIS	STEP	TIMES

CHK CHANGE NO	REV
N7606 MLOOK	B

SIGNATURES	DATE
DRN.	
CHK'D.	
MECH.ENG.	
PROJ.ENG.	
PROD.MGR.	
SCALE	
SHT. 1 OF 1	
NEXT HIGHER ASSY.	

ETCH REV. E1

digital

TITLE

SIZE	CODE	NUMBER	REV
D			B

AUTOMATED BY PRTLST.5R(55)

P A R T S L I S T

LINE	ITEM	TOP DOCUMENT	PART NUMBER	MIN REV	DESCRIPTION	QTY PER VARIATION AA D1	AC D1	AH D1	BA D1	REFERENCE DESIGNATOR
					VARIATION REVISION LEVEL:					
1	1	D-MD-5016523-0-0	5016523-01		CIRCUIT DRILL & ETCH	1	1	1	1	
2	2		1010279-01		.47 MFD 25V 20% CER	6	6	6	6	C30-C35
3	3		1012784-00		.047 MFD 50V +80-20% CER	7	7	7	7	C28,C1-C6
4	4		1013466-05		56.0 MMF 50V 5% CER	1	1	1	1	C67
5	5		1013466-07		220.0 MMF 50V 5% CER	1	1	1	1	C29
6	6		1014265-02		.33 MFD 50V +80-20% CER	58	58	58	58	C7-C27,C42-C66,C68,C69,C71-C80
7	7		1017472-00		10 MFD 35V +75-10% AL EL	3	3	3	3	C39-C41
8	8		1020446-05		22 MFD 16V +50-10% AL EL	2	2	2	2	C37,C38
9	9		1100114-00		PIV= 25 IO=135 MA	1	1	1	1	D9
10	10		1105275-00		PIV= 60 IO=300 MA -15NS	3	3	3	3	D2,D4,D3
11	11		1109977-00		VZ= 4.3 5% 1N749A	1	1	1	1	D1
12	12		1114117-00		PIV= 40 IO= 75 A - 4NS	3	3	3	3	D6-D8
13	13		1114136-02		LED 6.7MA 5V .2MCD GREEN	1	1	1	1	D14
14	14		1120964-01		LED ASSY 4 RED 5V 8MA	1	1	1	1	D10
15	15		1210929-02		FUSE, SUB-MINI 1.000A, 125V, A	2	2	2	2	F1,F2
16	16		1213113-03		HANDLE,MODULE	1	1	1	1	
17	17		1213506-04		PCB HEADER 09PIN(2X05).100CC 90D	1	1	1	1	J3
18	18		1213506-10		PCB HEADER 20PIN(2X10).100CC 90D	1	1	1	1	J2
19	19		1213506-13		PCB HEADER 50PIN(2X25).100CC 90D	1	1	1	1	J1
20	20		1215006-07		SKT,IC 28PIN DIP TIN SOLD	2	2	2	2	XE21,XE22
21	21		1300202-00		47.0 .25 W 5.0 % CF	3	3	3	3	R1,R2,R29
22	22		1300365-00		1.0 K .25 W 5.0 % CF	1	1	1	1	R3
23	23		1300447-00		4.70 K .25 W 5.0 % CF	1	1	1	1	R8
24	24		1300479-00		10.0 K .25 W 5.0 % CF	2	2	2	2	R11,R12
25	25		1301808-00		22.0 K .25 W 5.0 % CF	1	1	1	1	R4
26	26		1302388-00		2.0 K .25 W 5.0 % CF	1	1	1	1	R14
27	27		1302466-00		100.0 K .25 W 5.0 % CF	1	1	1	1	R16
28	28		1304837-00		24.0 K .25 W 5.0 % CF	1	1	1	1	R7
29	29		1314637-00		R NETWORK 3-22 1.0 % 6PIN	4	4	4	4	R31-R34
30	30		1316334-02		R NETWORK 9-10K 2.0 % 10PIN	2	2	2	2	R10,R23

REVISION HISTORY			BASIC PART NO: M7606			
ENG	ECO NUMBER	REV	SECTION A OF C	DRN: RONALD RHOADES	DATE: 01-FEB-84	D I G I T A L
---	INITIAL	A	SECTION.VARIATION INDEX	CHK'D: DAVID DROZD	DATE: 17-MAY-84	TITLE PARTS LIST MAYFLOWER KA630
BM	M7606-ML001	B	[A] AA,AC,AH,BA			
BM	M7606-ML002	C	[B] BC,BH,CA,CC	DES.ENG: BARRY MASKAS	DATE: 22-MAY-84	DOCUMENT NUMBER
			[C] CH,DA,DC,DH			SIZE K / CODE PL / NUMBER M7606-0-DBP / REV C
			[D]	RESP.ENG.: BARRY MASKAS	DATE: 8-AUG-84	
			[E]			
			[F]	MFG.ENG.: BILL SCHULTE	DATE: 22-MAY-84	RELEASE DATE: 19-JUN-85
			[H]			
			[J]	ASSEMBLY NUMBER: D-UA-M7606-0-0	TOP DOCUMENT NUMBER: B-DD-M7606-0-0	FILE NAME: Z8847C.PLS / EDIT # 37
			[K]			
			[L]			
			[M]			
			[N]			

"THIS DRAWING AND THE SPECIFICATIONS CONTAINED HEREIN ARE CONFIDENTIAL AND PROPRIETARY. THEY ARE THE PROPERTY OF DIGITAL EQUIPMENT CORPORATION AND SHALL NOT BE REPRODUCED OR COPIED OR USED IN WHOLE OR IN PART AS THE BASIS FOR THE MANUFACTURE OR SALE OF ITEMS WITHOUT WRITTEN PERMISSION. THIS IS AN UNPUBLISHED WORK PROTECTED UNDER THE FEDERAL COPYRIGHT LAWS."

AUTOMATED BY PRTLST.5R(55)

P A R T S L I S T

LINE	ITEM	TOP DOCUMENT	PART NUMBER	MIN REV	DESCRIPTION	QTY PER VARIATION AA D1	AC D1	AH D1	BA D1	REFERENCE DESIGNATOR
					VARIATION REVISION LEVEL:					
31	31		1316395-02		R NETWORK 9-1.0K 2.0 % 10PIN	1	1	1	1	R9
32	32		1317404-00		249.0 .25 W 1.0 % RN55D-F10	1	1	1	1	R13
33	33		1317558-01		R NETWORK 4-27 5.0 % 8PIN	2	2	2	2	R39,R40
34	34		1318110-00		R NETWORK 11-330 11-680 13PIN	4	4	4	4	R24-R27
35	35		1319610-01		750.0 K .25 W .10% RN55E-B 2	1	1	1	1	R17
36	36		1319645-01		487.0 K .25 W .10% RN55E-B 2	1	1	1	1	R18
37	37		1321144-01		R NETWORK 5-220 2.0% 10PIN	1	1	1	1	R28
38	38		1321218-01		R NETWORK 4-39 +-10HM 8PIN	4	4	4	4	R35-R38
39	39		1811660-05		*** THIS ITEM IS NOT USED ***	-	-	-	-	
40	40		1811660-62		OSCILLATOR,XTAL 614.4 KHZ	1	1	1	1	Y2
41	41		1814057-00		OSCILLATOR, XTAL 40.000 MHZ	1	1	1	1	Y3
42	42		1818800-00		OSCILLATOR,XTAL 32.768KHZ	1	1	1	1	Y1
43	43		1911469-B0		8640 BURNED-IN RECEIVER,B	1	1	1	1	E16
44	44		1912803-B0		LS04 BURNED-IN INVERTER G	1	1	1	1	E25
45	45		1913471-B0		LS367 BURNED-IN DRIVER,BUS	1	1	1	1	E41
46	46		1914140-01		LM 211P COMPARATOR,VOLTAGE	1	1	1	1	E29
47	47		1914987-00		8641-2 TRANSCEIVER,UNIBUS,QU	4	4	4	4	E5,E7,E19,E24
48	48		1915193-B0		LS244 BURNED-IN DRIVER,LIN	1	1	1	1	E28
49	49		1915219-B0		LS373 BURNED-IN FF-O OCTAL	1	1	1	1	E1
50	50		1915415-B0		9636 BURNED-IN DRIVER,DUA	1	1	1	1	E23
51	51		1916028-B1		9643 BURNED-IN DRIVER,TTL	1	1	1	1	E15
52	52		1918868-B0		LS26 NAND GATE,2-IN,HIGH	1	1	1	1	E35
53	53		1919015-00		DC 021 BUS TRANSCEIVER,20PI	3	3	3	3	E11,E30,E36
54	54		1919542-B1		9639 RECEIVER,LINE,DUAL,P	1	1	1	1	E18
55	55		1919684-01		LM 385B2 PREC VOLT REF. 1.23	1	1	1	1	D5
56	56		1920441-B1		74F245 TRANSCEIVER,BI-DIREC	4	4	4	4	E52,E71,E85,E99
57	57		1920442-B1		74F374 FF-D,OCTAL,TRI-STATE	2	2	2	2	E8,E12
58	58		1920853-B1		LS646 BUS TRANSCEIVER/REGI	2	2	2	2	E9,E10
59	59		1921008-B1		74F240 BUFFER/LINE DRIVER,O	2	2	2	2	E80,E94
60	60		1921010-B1		74F373 OCTAL TRANSPARENT LA	5	5	5	5	E2,E6,E46,E53,E73
61	61		1921305-B1		74F00 NAND GATE,QUAD,2-IN,	1	1	1	1	E47
62	62		1921306-B1		74F02 NOR GATE,QUAD,2-IN,B	1	1	1	1	E38
63	63		1921307-B1		74F04 HEX INVERTER,BURNED	2	2	2	2	E32,E87
64	64		1921312-B1		74F32 OR GATE,QUAD,2-IN,BU	2	2	2	2	E37,E65
65	65		1921314-B1		74F74 FF-D,DUAL,BURNED-IN	2	2	2	2	E31,E34
66	66		1921321-B1		74F158 MUX,QUAD,2-IN,BURNED	3	3	3	3	E72,E93,E101
67	67		1921323-B1		74F174 FF-D,HEX,BURNED-IN	2	2	2	2	E17,E59
68	68		1921417-B1		74F521 COMPARATOR,IDENTITY,	1	1	1	1	E66
69	69		1922871-01		TRANSCEIVER,PARITY B	4	4	4	4	E58,E64,E92,E106
70	70		1923679-B1		74F537 DECODER/DEMUX,1-OF-1	1	1	1	1	E100
71	71		2117312-00		UART DL-11 SOFTWARE	1	1	1	1	E13
72	72		2118467-02		*** THIS ITEM IS NOT USED ***	-	-	-	-	
73	73		2118472-02		*** THIS ITEM IS NOT USED ***	-	-	-	-	
74	74		2118795-00		146818 CLOCK/CALENDAR/RAM	1	1	1	1	E14
75	75		2120887-01		DC 333 MICROVAX,32BIT 68PIN	1	1	1	1	E43
76	76		2121384-02		RAM 8KX8,STATIC 150	2	2	2	2	E3,E4
77	77		2121413-02		41256 RAM 256KX1,DYNAMIC 1	-	-	36	-	E48-E51,E54-E57,E60-E63,E67-E70,
									CONT	E74-E77,E81-E84,E88-E91,E95-E98,

D I G I T A L	TITLE MAYFLOWER KA630	SECTION A OF C	SIZE K	CODE PL	DOCUMENT NUMBER M7606-0-DBP	REV C

P A R T S L I S T

LINE	ITEM	TOP DOCUMENT	PART NUMBER	MIN REV	DESCRIPTION / VARIATION REVISION LEVEL:		QTY PER VARIATION AA D1	AC D1	AH D1	BA D1	REFERENCE DESIGNATOR
									CONT		E102-E105
78	78		2121415-02		81256-15 RAM 256KX1,DYNAMIC 1		-	36	-	-	E48-E51,E54-E57,E60-E63,E67-E70,
									CONT		E74-E77,E81-E84,E88-E91,E95-E98,
									CONT		E102-E105
79	79		2122797-01		DC 337 MICROVAX FLOATING PO		1	1	1	-	E42
80	80		2123389-01		GATE ARRAY,3200 GATE		1	1	1	1	E45
81	81		2123413-01		DC379 CMOS GATE ARRAY,144PGA,320		1	1	1	1	E44
82	82		23007L3-00		L3-01		1	1	1	1	E39
83	83		23008L3-00		L3-01 FPLS		1	1	1	1	E20
84	84		23009L3-00		L3-01		1	1	1	1	E26
85	85		23010L3-00		L3-01		1	1	1	1	E33
86	86		23018E6-00		*** THIS ITEM IS NOT USED ***		-	-	-	-	
87	87		23019E6-00		*** THIS ITEM IS NOT USED ***		-	-	-	-	
88	88		23036L1-00		*** THIS ITEM IS NOT USED ***		-	-	-	-	
89	89		23115F2-00		*** THIS ITEM IS NOT USED ***		-	-	-	-	
90	90		23169J5-00		J5-03 PAL,LOGIC		1	1	1	1	E40
91	91		23170J5-00		J5-03 PAL,LOGIC		1	1	1	1	E78
92	92		23171J5-00		J5-03 PAL,LOGIC		1	1	1	1	E86
93	93		23E42F1-00		F1-05		1	1	1	1	E79
94	94		9000024-01		EYELET,ROLLED 0.1210DX0.192		4	4	4	4	
95	95		9009185-00		JUMPER, WIRE, INSULATED, BLACK B		3	3	3	3	W2,W4,W5
96	96		9907004-06		CARTON,DIE CUT,B,200PSI W/ARTWOR		1	1	1	1	
97	97		9907025-06		BAG,ANTISTATIC BUBBLE		1	1	1	1	
98	98		9907092-04		BAG,TRANSLUCENT,ESD PROTECTIVE		1	1	1	1	
99	99		23034E6-00		*** THIS ITEM IS NOT USED ***		-	-	-	-	
100	100		23035E6-00		*** THIS ITEM IS NOT USED ***		-	-	-	-	
101	101		23053L1-00		L1-01		1	1	1	1	E27
102	102		23062E6-00		E6-02	U	1	1	1	1	E22
103	103		23063E6-00		E6-02	U	1	1	1	1	E21

104 NOTE: M7606-AA IS THE PRIMARY VARIATION OF THE KA630 CPU.
105 NOTE: M7606-AC IS THE MODULE USING FUJITSU 256K RAMS.
106 NOTE: M7606-AH IS THE MODULE USING NEC 256K RAMS.
107 NOTE: M7606-BA IS THE AA VERSION WITHOUT FLOATING POINT.
108 NOTE: M7606-BC IS THE MODULE USING FUJITSU 256K RAMS.
109 NOTE: M7606-BH IS THE MODULE USING NEC 256K RAMS.
110 NOTE: M7606-CA IS THE AA VERSION USING 64K RAMS
111 NOTE: M7606-CC IS THE MODULE USING FUJITSU 64K RAMS.
112 NOTE: M7606-CH IS THE MODULE USING NEC 64K RAMS.
113 NOTE: M7606-DA IS THE CA VERSION WITHOUT FLOATING POINT.
114 NOTE: M7606-DC IS THE MODULE USING FUJITSU 64K RAMS.
115 NOTE: M7606-DH IS THE MODULE USING NEC 64K RAMS.

D I G I T A L	TITLE MAYFLOWER KA630	SECTION A OF C	SIZE K	CODE PL	DOCUMENT NUMBER M7606-0-DBP	REV C

AUTOMATED BY PRTLST.5R(55)

P A R T S L I S T

LINE	ITEM	TOP DOCUMENT	PART NUMBER	MIN REV	DESCRIPTION	QTY PER VARIATION BC D1	BH D1	CA D1	CC D1	REFERENCE DESIGNATOR
					VARIATION REVISION LEVEL:					
1	1	D-MD-5016523-0-0	5016523-01		CIRCUIT DRILL & ETCH	1	1	1	1	
2	2		1010279-01		.47 MFD 25V 20% CER	6	6	6	6	C30-C35
3	3		1012784-00		.047 MFD 50V +80-20% CER	7	7	7	7	C28,C1-C6
4	4		1013466-05		56.0 MMF 50V 5% CER	1	1	1	1	C67
5	5		1013466-07		220.0 MMF 50V 5% CER	1	1	1	1	C29
6	6		1014265-02		.33 MFD 50V +80-20% CER	58	58	58	58	C7-C27,C42-C66,C68,C69,C71-C80
7	7		1017472-00		10 MFD 35V +75-10% AL EL	3	3	3	3	C39-C41
8	8		1020446-05		22 MFD 16V +50-10% AL EL	2	2	2	2	C37,C38
9	9		1100114-00		PIV= 25 IO=135 MA	1	1	1	1	D9
10	10		1105275-00		PIV= 60 IO=300 MA -15NS	3	3	3	3	D2,D4,D3
11	11		1109977-00		VZ= 4.3 5% 1N749A	1	1	1	1	D1
12	12		1114117-00		PIV= 40 IO= 75/ A - 4NS	3	3	3	3	D6-D8
13	13		1114136-02		LED 6.7MA 5V .2MCD GREEN	1	1	1	1	D14
14	14		1120964-01		LED ASSY 4 RED 5V 8MA	1	1	1	1	D10
15	15		1210929-02		FUSE, SUB-MINI 1.000A, 125V, A	2	2	2	2	F1,F2
16	16		1213113-03		HANDLE,MODULE	1	1	1	1	
17	17		1213506-04		PCB HEADER 09PIN(2X05).100CC 90D	1	1	1	1	J3
18	18		1213506-10		PCB HEADER 20PIN(2X10).100CC 90D	1	1	1	1	J2
19	19		1213506-13		PCB HEADER 50PIN(2X25).100CC 90D	1	1	1	1	J1
20	20		1215006-07		SKT,IC 28PIN DIP TIN SOLD	2	2	2	2	XE21,XE22
21	21		1300202-00		47.0 .25 W 5.0 % CF	3	3	3	3	R1,R2,R29
22	22		1300365-00		1.0 K .25 W 5.0 % CF	1	1	1	1	R3
23	23		1300447-00		4.70 K .25 W 5.0 % CF	1	1	1	1	R8
24	24		1300479-00		10.0 K .25 W 5.0 % CF	2	2	2	2	R11,R12
25	25		1301808-00		22.0 K .25 W 5.0 % CF	1	1	1	1	R4
26	26		1302388-00		2.0 K .25 W 5.0 % CF	1	1	1	1	R14
27	27		1302466-00		100.0 K .25 W 5.0 % CF	1	1	1	1	R16
28	28		1304837-00		24.0 K .25 W 5.0 % CF	1	1	1	1	R7
29	29		1314637-00		R NETWORK 3-22 1.0 % 6PIN	4	4	4	4	R31-R34
30	30		1316334-02		R NETWORK 9-10K 2.0 % 10PIN	2	2	2	2	R10,R23

REVISION HISTORY		
ENG	ECO NUMBER	REV
---	INITIAL	A
BM	M7606-ML001	B
BM	M7606-ML002	C

BASIC PART NO: M7606

SECTION B OF C

SECTION.VARIATION INDEX
[A] AA,AC,AH,BA
[B] BC,BH,CA,CC
[C] CH,DA,DC,DH
[D]
[E]
[F]
[H]
[J]
[K]
[L]
[M]
[N]

DRN: RONALD RHOADES	DATE: 01-FEB-84	D I G I T A L
CHK'D: DAVID DROZD	DATE: 17-MAY-84	TITLE PARTS LIST MAYFLOWER KA630
DES.ENG: BARRY MASKAS	DATE: 22-MAY-84	DOCUMENT NUMBER SIZE K CODE PL NUMBER M7606-0-DBP REV C
RESP.ENG.: BARRY MASKAS	DATE: 8-AUG-84	
MFG.ENG.: BILL SCHULTE	DATE: 22-MAY-84	RELEASE DATE: 19-JUN-85
ASSEMBLY NUMBER: D-UA-M7606-0-0	TOP DOCUMENT NUMBER: B-DD-M7606-0-0	FILE NAME: Z8847C.PLS EDIT # 37

"THIS DRAWING AND THE SPECIFICATIONS CONTAINED HEREIN ARE CONFIDENTIAL AND PROPRIETARY. THEY ARE THE PROPERTY OF DIGITAL EQUIPMENT CORPORATION AND SHALL NOT BE REPRODUCED OR COPIED OR USED IN WHOLE OR IN PART AS THE BASIS FOR THE MANUFACTURE OR SALE OF ITEMS WITHOUT WRITTEN PERMISSION. THIS IS AN UNPUBLISHED WORK PROTECTED UNDER THE FEDERAL COPYRIGHT LAWS."

LINE	ITEM	TOP DOCUMENT	PART NUMBER	MIN REV	DESCRIPTION VARIATION REVISION LEVEL:	QTY PER VARIATION BC D1	BH D1	CA D1	CC D1	REFERENCE DESIGNATOR
31	31		1316395-02		R NETWORK 9-1.0K 2.0 % 10PIN	1	1	1	1	R9
32	32		1317404-00		249.0 .25 W 1.0 % RN55D-F10	1	1	1	1	R13
33	33		1317558-01		R NETWORK 4-27 5.0 % 8PIN	2	2	2	2	R39,R40
34	34		1318110-00		R NETWORK 11-330 11-680 13PIN	4	4	4	4	R24-R27
35	35		1319610-01		750.0 K .25 W .10% RN55E-B 2	1	1	1	1	R17
36	36		1319645-01		487.0 K .25 W .10% RN55E-B 2	1	1	1	1	R18
37	37		1321144-01		R NETWORK 5-220 2.0% 10PIN	1	1	1	1	R28
38	38		1321218-01		R NETWORK 4-39 +-10HM 8PIN	4	4	4	4	R35-R38
39	39		1811660-05		OSCILLATOR, XTAL 33.330 MHZ	-	-	1	1	Y3
40	40		1811660-62		OSCILLATOR,XTAL 614.4 KHZ	1	1	1	1	Y2
41	41		1814057-00		OSCILLATOR, XTAL 40.000 MHZ	1	1	-	-	Y3
42	42		1818800-00		OSCILLATOR,XTAL 32.768KHZ	1	1	1	1	Y1
43	43		1911469-B0		8640 BURNED-IN RECEIVER,B	1	1	1	1	E16
44	44		1912803-B0		LS04 BURNED-IN INVERTER G	1	1	1	1	E25
45	45		1913471-B0		LS367 BURNED-IN DRIVER,BUS	1	1	1	1	E41
46	46		1914140-01		LM 211P COMPARATOR,VOLTAGE	1	1	1	1	E29
47	47		1914987-00		8641-2 TRANSCEIVER,UNIBUS,QU	4	4	4	4	E5,E7,E19,E24
48	48		1915193-B0		LS244 BURNED-IN DRIVER,LIN	1	1	1	1	E28
49	49		1915219-B0		LS373 BURNED-IN FF-O OCTAL	1	1	1	1	E1
50	50		1915415-B0		9636 BURNED-IN DRIVER,DUA	1	1	1	1	E23
51	51		1916028-B1		9643 BURNED-IN DRIVER,TTL	1	1	1	1	E15
52	52		1918868-B0		LS26 NAND GATE,2-IN,HIGH	1	1	1	1	E35
53	53		1919015-00		DC 021 BUS TRANSCEIVER,20PI	3	3	3	3	E11,E30,E36
54	54		1919542-B1		9639 RECEIVER,LINE,DUAL,P	1	1	1	1	E18
55	55		1919684-01		LM 385B2 PREC VOLT REF. 1.23	1	1	1	1	D5
56	56		1920441-B1		74F245 TRANSCEIVER,BI-DIREC	4	4	4	4	E52,E71,E85,E99
57	57		1920442-B1		74F374 FF-D,OCTAL,TRI-STATE	2	2	2	2	E8,E12
58	58		1920853-B1		LS646 BUS TRANSCEIVER/REGI	2	2	2	2	E9,E10
59	59		1921008-B1		74F240 BUFFER/LINE DRIVER,O	2	2	2	2	E80,E94
60	60		1921010-B1		74F373 OCTAL TRANSPARENT LA	5	5	5	5	E2,E6,E46,E53,E73
61	61		1921305-B1		74F00 NAND GATE,QUAD,2-IN,	1	1	1	1	E47
62	62		1921306-B1		74F02 NOR GATE,QUAD,2-IN,B	1	1	1	1	E38
63	63		1921307-B1		74F04 HEX INVERTER,BURNED	2	2	2	2	E32,E87
64	64		1921312-B1		74F32 OR GATE,QUAD,2-IN,BU	2	2	2	2	E37,E65
65	65		1921314-B1		74F74 FF-D,DUAL,BURNED-IN	2	2	2	2	E31,E34
66	66		1921321-B1		74F158 MUX,QUAD,2-IN,BURNED	3	3	3	3	E72,E93,E101
67	67		1921323-B1		74F174 FF-D,HEX,BURNED-IN	2	2	2	2	E17,E59
68	68		1921417-B1		74F521 COMPARATOR,IDENTITY,	1	1	1	1	E66
69	69		1922871-01		TRANSCEIVER,PARITY B	4	4	4	4	E58,E64,E92,E106
70	70		1923679-B1		74F537 DECODER/DEMUX,1-OF-1	1	1	1	1	E100
71	71		2117312-00		UART DL-11 SOFTWARE	1	1	1	1	E13
72	72		2118467-02		8264-15 RAM 64K X1,150NS 1	-	-	-	36	E48-E51,E54-E57,E60-E63,E67-E70,
									CONT	E74-E77,E81-E84,E88-E91,E95-E98,
									CONT	E102-E105
73	73		2118472-02		*** THIS ITEM IS NOT USED ***	-	-	-	-	
74	74		2118795-00		146818 CLOCK/CALENDAR/RAM	1	1	1	1	E14
75	75		2120887-01		DC 333 MICROVAX,32BIT 68PIN	1	1	1	1	E43
76	76		2121384-02		RAM 8KX8,STATIC 150	2	2	2	2	E3,E4

LINE	ITEM	TOP DOCUMENT	PART NUMBER	MIN REV	DESCRIPTION	VARIATION REVISION LEVEL:	QTY PER VARIATION BC D1	BH D1	CA D1	CC D1	REFERENCE DESIGNATOR
77	77		2121413-02	41256	RAM 256KX1,DYNAMIC 1		-	36	-	-	E48-E51,E54-E57,E60-E63,E67-E70,
									CONT		E74-E77,E81-E84,E88-E91,E95-E98,
									CONT		E102-E105
78	78		2121415-02	81256-15	RAM 256KX1,DYNAMIC 1		36	-	-	-	E48-E51,E54-E57,E60-E63,E67-E70,
									CONT		E74-E77,E81-E84,E88-E91,E95-E98,
									CONT		E102-E105
79	79		2122797-01	DC	337	MICROVAX FLOATING PO	-	-	1	1	E42
80	80		2123389-01			GATE ARRAY,3200 GATE	1	1	1	1	E45
81	81		2123413-01	DC379		CMOS GATE ARRAY,144PGA,320	1	1	1	1	E44
82	82		23007L3-00	L3-01			1	1	1	1	E39
83	83		23008L3-00	L3-01		FPLS	1	1	1	1	E20
84	84		23009L3-00	L3-01			1	1	1	1	E26
85	85		23010L3-00	L3-01			1	1	1	1	E33
86	86		23018E6-00	*** THIS ITEM IS NOT USED ***			-	-	-	-	
87	87		23019E6-00	*** THIS ITEM IS NOT USED ***			-	-	-	-	
88	88		23036L1-00	*** THIS ITEM IS NOT USED ***			-	-	-	-	
89	89		23115F2-00	F2-03			-	-	1	1	E79
90	90		23169J5-00	J5-03		PAL,LOGIC	1	1	1	1	E40
91	91		23170J5-00	J5-03		PAL,LOGIC	1	1	1	1	E78
92	92		23171J5-00	J5-03		PAL,LOGIC	1	1	1	1	E86
93	93		23E42F1-00	F1-05			1	1	-	-	E79
94	94		9000024-01	EYELET,ROLLED		0.1210DX0.192	4	4	4	4	
95	95		9009185-00	JUMPER, WIRE, INSULATED, BLACK B			3	3	-	-	W2,W4,W5
			CONT				-	-	3	3	W2,W3,W6
96	96		9907004-06	CARTON,DIE CUT,B,200PSI W/ARTWOR			1	1	1	1	
97	97		9907025-06	BAG,ANTISTATIC BUBBLE			1	1	1	1	
98	98		9907092-04	BAG,TRANSLUCENT,ESD PROTECTIVE			1	1	1	1	
99	99		23034E6-00	*** THIS ITEM IS NOT USED ***			-	-	-	-	
100	100		23035E6-00	*** THIS ITEM IS NOT USED ***			-	-	-	-	
101	101		23053L1-00	L1-01			1	1	1	1	E27
102	102		23062E6-00	E6-02		U	1	1	1	1	E22
103	103		23063E6-00	E6-02		U	1	1	1	1	E21

104 NOTE: M7606-AA IS THE PRIMARY VARIATION OF THE KA630 CPU.
105 NOTE: M7606-AC IS THE MODULE USING FUJITSU 256K RAMS.
106 NOTE: M7606-AH IS THE MODULE USING NEC 256K RAMS.
107 NOTE: M7606-BA IS THE AA VERSION WITHOUT FLOATING POINT.
108 NOTE: M7606-BC IS THE MODULE USING FUJITSU 256K RAMS.
109 NOTE: M7606-BH IS THE MODULE USING NEC 256K RAMS.
110 NOTE: M7606-CA IS THE AA VERSION USING 64K RAMS
111 NOTE: M7606-CC IS THE MODULE USING FUJITSU 64K RAMS.
112 NOTE: M7606-CH IS THE MODULE USING NEC 64K RAMS.
113 NOTE: M7606-DA IS THE CA VERSION WITHOUT FLOATING POINT.
114 NOTE: M7606-DC IS THE MODULE USING FUJITSU 64K RAMS.

AUTOMATED BY PRTLST.5R(55)

P A R T S L I S T

LINE ITEM	TOP DOCUMENT	PART NUMBER	MIN REV	DESCRIPTION	QTY PER VARIATION BC	BH	CA	CC	REFERENCE DESIGNATOR
				VARIATION REVISION LEVEL:	D1	D1	D1	D1	

115 NOTE: M7606-DH IS THE MODULE USING NEC 64K RAMS.

D I G I T A L	TITLE MAYFLOWER KA630	SECTION B OF C	SIZE K	CODE PL	DOCUMENT NUMBER M7606-0-DBP	REV C

AUTOMATED BY PRTLST.5R(55)

P A R T S L I S T

LINE	ITEM	TOP DOCUMENT	PART NUMBER	MIN REV	DESCRIPTION	QTY PER VARIATION CH D1	DA D1	DC D1	DH D1	REFERENCE DESIGNATOR
					VARIATION REVISION LEVEL:					
1	1	D-MD-5016523-0-0	5016523-01		CIRCUIT DRILL & ETCH	1	1	1	1	
2	2		1010279-01		.47 MFD 25V 20% CER	6	6	6	6	C30-C35
3	3		1012784-00		.047 MFD 50V +80-20% CER	7	7	7	7	C28,C1-C6
4	4		1013466-05		56.0 MMF 50V 5% CER	1	1	1	1	C67
5	5		1013466-07		220.0 MMF 50V 5% CER	1	1	1	1	C29
6	6		1014265-02		.33 MFD 50V +80-20% CER	58	58	58	58	C7-C27,C42-C66,C68,C69,C71-C80
7	7		1017472-00		10 MFD 35V +75-10% AL EL	3	3	3	3	C39-C41
8	8		1020446-05		22 MFD 16V +50-10% AL EL	2	2	2	2	C37,C38
9	9		1100114-00		PIV= 25 IO=135 MA	1	1	1	1	D9
10	10		1105275-00		PIV= 60 IO=300 MA -15NS	3	3	3	3	D2,D4,D3
11	11		1109977-00		VZ= 4.3 5% 1N749A	1	1	1	1	D1
12	12		1114117-00		PIV= 40 IO= 75 A - 4NS	3	3	3	3	D6-D8
13	13		1114136-02		LED 6.7MA 5V .2MCD GREEN	1	1	1	1	D14
14	14		1120964-01		LED ASSY 4 RED 5V 8MA	1	1	1	1	D10
15	15		1210929-02		FUSE, SUB-MINI 1.000A, 125V, A	2	2	2	2	F1,F2
16	16		1213113-03		HANDLE,MODULE	1	1	1	1	
17	17		1213506-04		PCB HEADER 09PIN(2X05).100CC 90D	1	1	1	1	J3
18	18		1213506-10		PCB HEADER 20PIN(2X10).100CC 90D	1	1	1	1	J2
19	19		1213506-13		PCB HEADER 50PIN(2X25).100CC 90D	1	1	1	1	J1
20	20		1215006-07		SKT,IC 28PIN DIP TIN SOLD	2	2	2	2	XE21,XE22
21	21		1300202-00		47.0 .25 W 5.0 % CF	3	3	3	3	R1,R2,R29
22	22		1300365-00		1.0 K .25 W 5.0 % CF	1	1	1	1	R3
23	23		1300447-00		4.70 K .25 W 5.0 % CF	1	1	1	1	R8
24	24		1300479-00		10.0 K .25 W 5.0 % CF	2	2	2	2	R11,R12
25	25		1301808-00		22.0 K .25 W 5.0 % CF	1	1	1	1	R4
26	26		1302388-00		2.0 K .25 W 5.0 % CF	1	1	1	1	R14
27	27		1302466-00		100.0 K .25 W 5.0 % CF	1	1	1	1	R16
28	28		1304837-00		24.0 K .25 W 5.0 % CF	1	1	1	1	R7
29	29		1314637-00		R NETWORK 3-22 1.0 % 6PIN	4	4	4	4	R31-R34
30	30		1316334-02		R NETWORK 9-10K 2.0 % 10PIN	2	2	2	2	R10,R23

REVISION HISTORY			BASIC PART NO: M7606			
ENG	ECO NUMBER	REV	SECTION C OF C	DRN: RONALD RHOADES	DATE: 01-FEB-84	D I G I T A L
---	INITIAL	A	SECTION.VARIATION INDEX	CHK'D: DAVID DROZD	DATE: 17-MAY-84	TITLE PARTS LIST MAYFLOWER KA630
BM	M7606-ML001	B	[A] AA,AC,AH,BA			
BM	M7606-ML002	C	[B] BC,BH,CA,CC	DES.ENG: BARRY MASKAS	DATE: 22-MAY-84	DOCUMENT NUMBER SIZE K, CODE PL, NUMBER M7606-0-DBP, REV C
			[C] CH,DA,DC,DH			
			[D]			
			[E]			
			[F]	RESP.ENG.: BARRY MASKAS	DATE: 8-AUG-84	
			[H]			
			[J]			
			[K]	MFG.ENG.: BILL SCHULTE	DATE: 22-MAY-84	RELEASE DATE: 19-JUN-85
			[L]			
			[M]	ASSEMBLY NUMBER: D-UA-M7606-0-0	TOP DOCUMENT NUMBER: B-DD-M7606-0-0	FILE NAME: Z8847C.PLS EDIT # 37
			[N]			

"THIS DRAWING AND THE SPECIFICATIONS CONTAINED HEREIN ARE CONFIDENTIAL AND PROPRIETARY. THEY ARE THE PROPERTY OF DIGITAL EQUIPMENT CORPORATION AND SHALL NOT BE REPRODUCED OR COPIED OR USED IN WHOLE OR IN PART AS THE BASIS FOR THE MANUFACTURE OR SALE OF ITEMS WITHOUT WRITTEN PERMISSION. THIS IS AN UNPUBLISHED WORK PROTECTED UNDER THE FEDERAL COPYRIGHT LAWS."

AUTOMATED BY PRTLST.5R(55)

P A R T S L I S T

LINE	ITEM	TOP DOCUMENT	PART NUMBER	MIN REV	DESCRIPTION VARIATION REVISION LEVEL:	QTY PER VARIATION CH D1	DA D1	DC D1	DH D1	REFERENCE DESIGNATOR
31	31		1316395-02		R NETWORK 9-1.0K 2.0 % 10PIN	1	1	1	1	R9
32	32		1317404-00		249.0 .25 W 1.0 % RN55D-F10	1	1	1	1	R13
33	33		1317558-01		R NETWORK 4-27 5.0 % 8PIN	2	2	2	2	R39,R40
34	34		1318110-00		R NETWORK 11-330 11-680 13PIN	4	4	4	4	R24-R27
35	35		1319610-01		750.0 K .25 W .10% RN55E-B 2	1	1	1	1	R17
36	36		1319645-01		487.0 K .25 W .10% RN55E-B 2	1	1	1	1	R18
37	37		1321144-01		R NETWORK 5-220 2.0% 10PIN	1	1	1	1	R28
38	38		1321218-01		R NETWORK 4-39 +-10HM 8PIN	4	4	4	4	R35-R38
39	39		1811660-05		OSCILLATOR, XTAL 33.330 MHZ	1	1	1	1	Y3
40	40		1811660-62		OSCILLATOR,XTAL 614.4 KHZ	1	1	1	1	Y2
41	41		1814057-00		*** THIS ITEM IS NOT USED ***	-	-	-	-	
42	42		1818800-00		OSCILLATOR,XTAL 32.768KHZ	1	1	1	1	Y1
43	43		1911469-B0		8640 BURNED-IN RECEIVER,B	1	1	1	1	E16
44	44		1912803-B0		LS04 BURNED-IN INVERTER G	1	1	1	1	E25
45	45		1913471-B0		LS367 BURNED-IN DRIVER,BUS	1	1	1	1	E41
46	46		1914140-01		LM 211P COMPARATOR,VOLTAGE	1	1	1	1	E29
47	47		1914987-00		8641-2 TRANSCEIVER,UNIBUS,QU	4	4	4	4	E5,E7,E19,E24
48	48		1915193-B0		LS244 BURNED-IN DRIVER,LIN	1	1	1	1	E28
49	49		1915219-B0		LS373 BURNED-IN FF-O OCTAL	1	1	1	1	E1
50	50		1915415-B0		9636 BURNED-IN DRIVER,DUA	1	1	1	1	E23
51	51		1916028-B1		9643 BURNED-IN DRIVER,TTL	1	1	1	1	E15
52	52		1918868-B0		LS26 NAND GATE,2-IN,HIGH	1	1	1	1	E35
53	53		1919015-00		DC 021 BUS TRANSCEIVER,20PI	3	3	3	3	E11,E30,E36
54	54		1919542-B1		9639 RECEIVER,LINE,DUAL,P	1	1	1	1	E18
55	55		1919684-01		LM 385B2 PREC VOLT REF. 1.23	1	1	1	1	D5
56	56		1920441-B1		74F245 TRANSCEIVER,BI-DIREC	4	4	4	4	E52,E71,E85,E99
57	57		1920442-B1		74F374 FF-D,OCTAL,TRI-STATE	2	2	2	2	E8,E12
58	58		1920853-B1		LS646 BUS TRANSCEIVER/REGI	2	2	2	2	E9,E10
59	59		1921008-B1		74F240 BUFFER/LINE DRIVER,O	2	2	2	2	E80,E94
60	60		1921010-B1		74F373 OCTAL TRANSPARENT LA	5	5	5	5	E2,E6,E46,E53,E73
61	61		1921305-B1		74F00 NAND GATE,QUAD,2-IN,	1	1	1	1	E47
62	62		1921306-B1		74F02 NOR GATE,QUAD,2-IN,B	1	1	1	1	E38
63	63		1921307-B1		74F04 HEX INVERTER,BURNED	2	2	2	2	E32,E87
64	64		1921312-B1		74F32 OR GATE,QUAD,2-IN,BU	2	2	2	2	E37,E65
65	65		1921314-B1		74F74 FF-D,DUAL,BURNED-IN	2	2	2	2	E31,E34
66	66		1921321-B1		74F158 MUX,QUAD,2-IN,BURNED	3	3	3	3	E72,E93,E101
67	67		1921323-B1		74F174 FF-D,HEX,BURNED-IN	2	2	2	2	E17,E59
68	68		1921417-B1		74F521 COMPARATOR,IDENTITY,	1	1	1	1	E66
69	69		1922871-01		TRANSCEIVER,PARITY B	4	4	4	4	E58,E64,E92,E106
70	70		1923679-B1		74F537 DECODER/DEMUX,1-OF-1	1	1	1	1	E100
71	71		2117312-00		UART DL-11 SOFTWARE	1	1	1	1	E13
72	72		2118467-02		8264-15 RAM 64K X1,150NS 1	-	-	36 CONT	- CONT	E48-E51,E54-E57,E60-E63,E67-E70, E74-E77,E81-E84,E88-E91,E95-E98, E102-E105
73	73		2118472-02		4164-3 MOS RAM 64K X1,150	36	-	- CONT	36 CONT	E48-E51,E54-E57,E60-E63,E67-E70, E74-E77,E81-E84,E88-E91,E95-E98, E102-E105
74	74		2118795-00		146818 CLOCK/CALENDAR/RAM	1	1	1	1	E14

D I G I T A L	TITLE MAYFLOWER KA630	SECTION C OF C	SIZE K	CODE PL	DOCUMENT NUMBER M7606-0-DBP	REV C

LINE	ITEM	TOP DOCUMENT	PART NUMBER	MIN REV	DESCRIPTION	QTY PER VARIATION CH	DA	DC	DH	REFERENCE DESIGNATOR
					VARIATION REVISION LEVEL:	D1	D1	D1	D1	
75	75		2120887-01		DC 333 MICROVAX,32BIT 68PIN	1	1	1	1	E43
76	76		2121384-02		RAM 8KX8,STATIC 150	2	2	2	2	E3,E4
77	77		2121413-02		*** THIS ITEM IS NOT USED ***	-	-	-	-	
78	78		2121415-02		*** THIS ITEM IS NOT USED ***	-	-	-	-	
79	79		2122797-01		DC 337 MICROVAX FLOATING PO	1	-	-	-	E42
80	80		2123389-01		GATE ARRAY,3200 GATE	1	1	1	1	E45
81	81		2123413-01		DC379 CMOS GATE ARRAY,144PGA,320	1	1	1	1	E44
82	82		23007L3-00		L3-01	1	1	1	1	E39
83	83		23008L3-00		L3-01 FPLS	1	1	1	1	E20
84	84		23009L3-00		L3-01	1	1	1	1	E26
85	85		23010L3-00		L3-01	1	1	1	1	E33
86	86		23018E6-00		*** THIS ITEM IS NOT USED ***	-	-	-	-	
87	87		23019E6-00		*** THIS ITEM IS NOT USED ***	-	-	-	-	
88	88		23036L1-00		*** THIS ITEM IS NOT USED ***	-	-	-	-	
89	89		23115F2-00		F2-03	1	1	1	1	E79
90	90		23169J5-00		J5-03 PAL,LOGIC	1	1	1	1	E40
91	91		23170J5-00		J5-03 PAL,LOGIC	1	1	1	1	E78
92	92		23171J5-00		J5-03 PAL,LOGIC	1	1	1	1	E86
93	93		23E42F1-00		*** THIS ITEM IS NOT USED ***	-	-	-	-	
94	94		9000024-01		EYELET,ROLLED 0.1210DX0.192	4	4	4	4	
95	95		9009185-00		JUMPER, WIRE, INSULATED, BLACK B	3	3	3	3	W2,W3,W6
96	96		9907004-06		CARTON,DIE CUT,B,200PSI W/ARTWOR	1	1	1	1	
97	97		9907025-06		BAG,ANTISTATIC BUBBLE	1	1	1	1	
98	98		9907092-04		BAG,TRANSLUCENT,ESD PROTECTIVE	1	1	1	1	
99	99		23034E6-00		*** THIS ITEM IS NOT USED ***	-	-	-	-	
100	100		23035E6-00		*** THIS ITEM IS NOT USED ***	-	-	-	-	
101	101		23053L1-00		L1-01	1	1	1	1	E27
102	102		23062E6-00		E6-02 U	1	1	1	1	E22
103	103		23063E6-00		E6-02 U	1	1	1	1	E21

104 NOTE: M7606-AA IS THE PRIMARY VARIATION OF THE KA630 CPU.
105 NOTE: M7606-AC IS THE MODULE USING FUJITSU 256K RAMS.
106 NOTE: M7606-AH IS THE MODULE USING NEC 256K RAMS.
107 NOTE: M7606-BA IS THE AA VERSION WITHOUT FLOATING POINT.
108 NOTE: M7606-BC IS THE MODULE USING FUJITSU 256K RAMS.
109 NOTE: M7606-BH IS THE MODULE USING NEC 256K RAMS.
110 NOTE: M7606-CA IS THE AA VERSION USING 64K RAMS
111 NOTE: M7606-CC IS THE MODULE USING FUJITSU 64K RAMS.
112 NOTE: M7606-CH IS THE MODULE USING NEC 64K RAMS.
113 NOTE: M7606-DA IS THE CA VERSION WITHOUT FLOATING POINT.
114 NOTE: M7606-DC IS THE MODULE USING FUJITSU 64K RAMS.
115 NOTE: M7606-DH IS THE MODULE USING NEC 64K RAMS.

KA630-AA,-AB,-AC,-AD (M7606) DRAWING DIRECTORY

DATA PATH

0 MICROVAX II SYSTEM

1 KA630 - uVAX on Q22 Bus

1.1 uVAX & FPU
1.1.1 uVAX & FPU PINOUTS

1.2 ADDRESS LATCH/LOCAL MEMORY DECODE

1.3 Memory Subsystem

1.4 Q22 Bus Interface Gate Array

1.4.1-1.4.2, 1.4.1.1-1.4.1.9

1.5 Translation Map Group

1.6 KA630 QBUS INTERFACE

1.7 uVAX Interface Gate Array

1.7.1-1.7.2, 1.7.2.1-1.7.2.10

1.8 TOY CLOCK

1.9 Console Serial Line Interface

1.10 LEDS and Configuration Connector

1.11 Decoupling Capacitors

CONTROL

2 KA630 State Machines

2.1 uVAX Cycle Controller

2.1.1 MEMORY SEQUENCER

2.1.2 MEMORY SEQUENCER SUPPORT

2.2 Q22 BUS STATE MACHINES

MISC.

3 KA630 MEMORY ARBITER LISTING

3.1-3.2 KA630 MEMORY ARBITER FLOW DIAGRAM

4 KA630 LOCAL I/O CONTROL MACHINE LISTING

4.1 KA630 LOCAL I/O CONTROL MACHINE FLOW DIAGRAM

5 Q22 BUS ARBITRATION CONTROL MACHINE LISTING

5.1 Q22 BUS ARBITRATION CONTROL MACHINE FLOW DIAGRAM

6 Q22 BUS MASTER CONTROL MACHINE LISTING

6.1 Q22 BUS MASTER CONTROL MACHINE FLOW DIAGRAM

7 Q22 BUS SLAVE CONTROL MACHINE LISTING

7.1-7.2 Q22 BUS SLAVE CONTROL MACHINE FLOW DIAGRAM

8 1KX4 RAS DECODE PROM (E79) LISTING

9 PALASM LISTINGS FOR PAL16L8A DEVICES

10 MNEMONIC DICTIONARY

DRAWING
TITLE=DIRECTORY
ABBREV=DIRECT
CIRCUIT←TYPE=DOCUMENTATION
LAST←MODIFIED=Sun Dec 9 16:50:34 1984

DEFINE
X←FIRST=0
X←STEP=SIZE

THIS DRAWING AND SPECIFICATIONS, DESIGN, BOTH THE PROPERTY OF DIGITAL EQUIPMENT CORPORATION AND SHALL NOT BE REPRODUCED OR COPIED OR USED IN WHOLE OR IN PART AS THE BASIS FOR MANUFACTURE OR SALE OF ITEMS WITHOUT PERMISSION. COPYRIGHT © 1983 DIGITAL EQUIPMENT CORPORATION

REVISION		
CHK	CHANGE NO	REV
	M7606M001	B

JOE MC MULLIN

DRN. MASKAS & McNamara	DATE 8-DEC-83	ENG. MASKAS & McNamara	DATE 8-DEC-83	TITLE: M7606 DRAWING DIRECTORY	
CHK'D MASKAS & McNamara	DATE 8-DEC-83	BOARD LOCATION: SHEET OF			
USRA: FIRST USED ON OPTION/MODEL:		TOP DOCUMENT NUMBER:		SIZE D CODE CS NUMBER M7606 -0 -1	REV. B

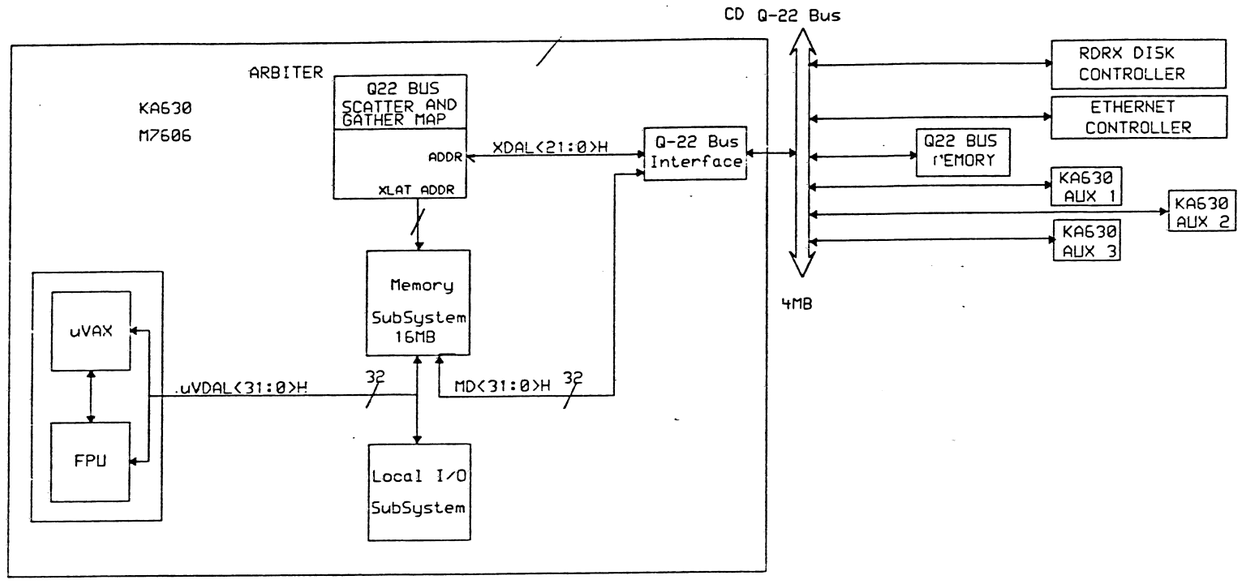

"THIS DRAWING AND SPECIFICATIONS, HEREIN, ARE THE PROPERTY OF DIGITAL EQUIPMENT CORPORATION AND SHALL NOT BE REPRODUCED OR COPIED OR USED IN WHOLE OR IN PART AS THE BASIS FOR THE MANUFACTURE OR SALE OF ITEMS WITHOUT WRITTEN PERMISSION.
COPYRIGHT 1984 DIGITAL EQUIPMENT CORPORATION

REVISION HISTORY		
REV	ECO NUMBER	DATE
B	M7505M001	04-MAY-84

DRAWING
TITLE=KASYSTEM
ABBREV=kasystem
CIRCUIT←TYPE=kdq32←processor
LAST←MODIFIED=Sun Oct 7 18:10:51 1984

DEFINE
X←FIRST=0
X←STEP=SIZE

digital

DRN: BARRY MASKAS	DATE 27-APR-84	ENG: BARRY MASKAS	DATE 27-APR-84
CHK'D: BARRY MASKAS	DATE 27-APR-84	SHEET 1 OF 1	
		NEXT HIGHER ASSEMBLY:	

TITLE: MICROVAX II SYSTEM

SIZE	CODE	NUMBER	REV
D	CS	M7505 -0 -2	B

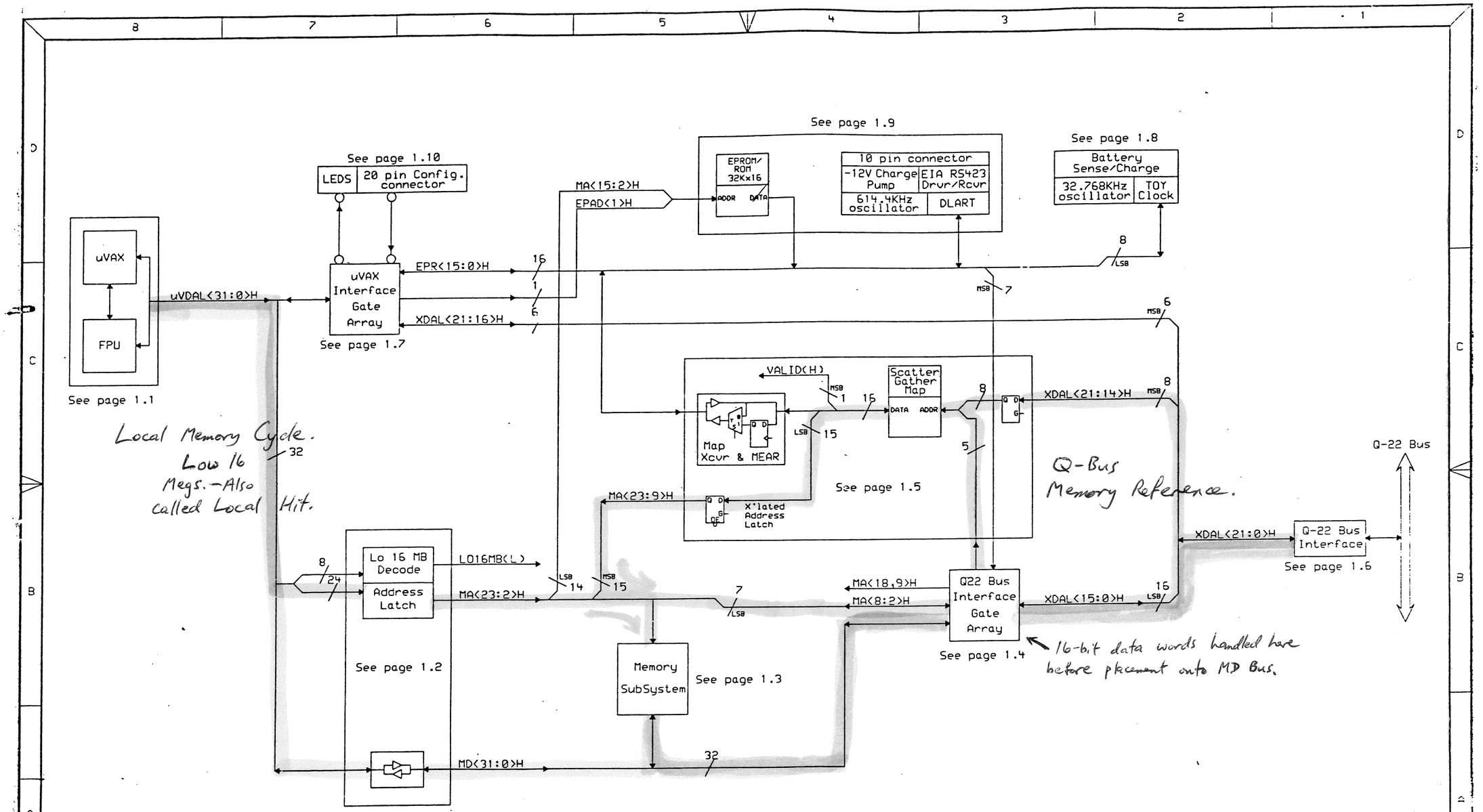

"THIS DRAWING AND SPECIFICATIONS, HEREIN, ARE THE PROPERTY OF DIGITAL EQUIPMENT CORPORATION AND SHALL NOT BE REPRODUCED OR COPIED OR USED IN WHOLE OR IN PART AS THE BASIS FOR THE MANUFACTURE OR SALE OF ITEMS WITHOUT WRITTEN PERMISSION.
COPYRIGHT 1984 DIGITAL EQUIPMENT CORPORATION

REVISION HISTORY		
REV	ECO NUMBER	DATE
B	M7606-M00	

DRAWING
TITLE=KDQ32
ABBREV=kdq32
CIRCUIT←TYPE=kdq32←processor
LAST←MODIFIED=Fri Oct 12 11:27:57 1984

DEFINE
X←FIRST=0
X←STEP=SIZE

digital

DRN: R. McNamara	DATE 3-OCT-84	ENG: R. McNamara	DATE 3-OCT-84	TITLE: KA630 - uVAX on Q22 Bus
CHK'D: R. McNamara	DATE 3-OCT-84	SHEET 1 OF 1		
		NEXT HIGHER ASSEMBLY:		SIZE D · CODE CS · NUMBER M7606 -0 -3 · REV B

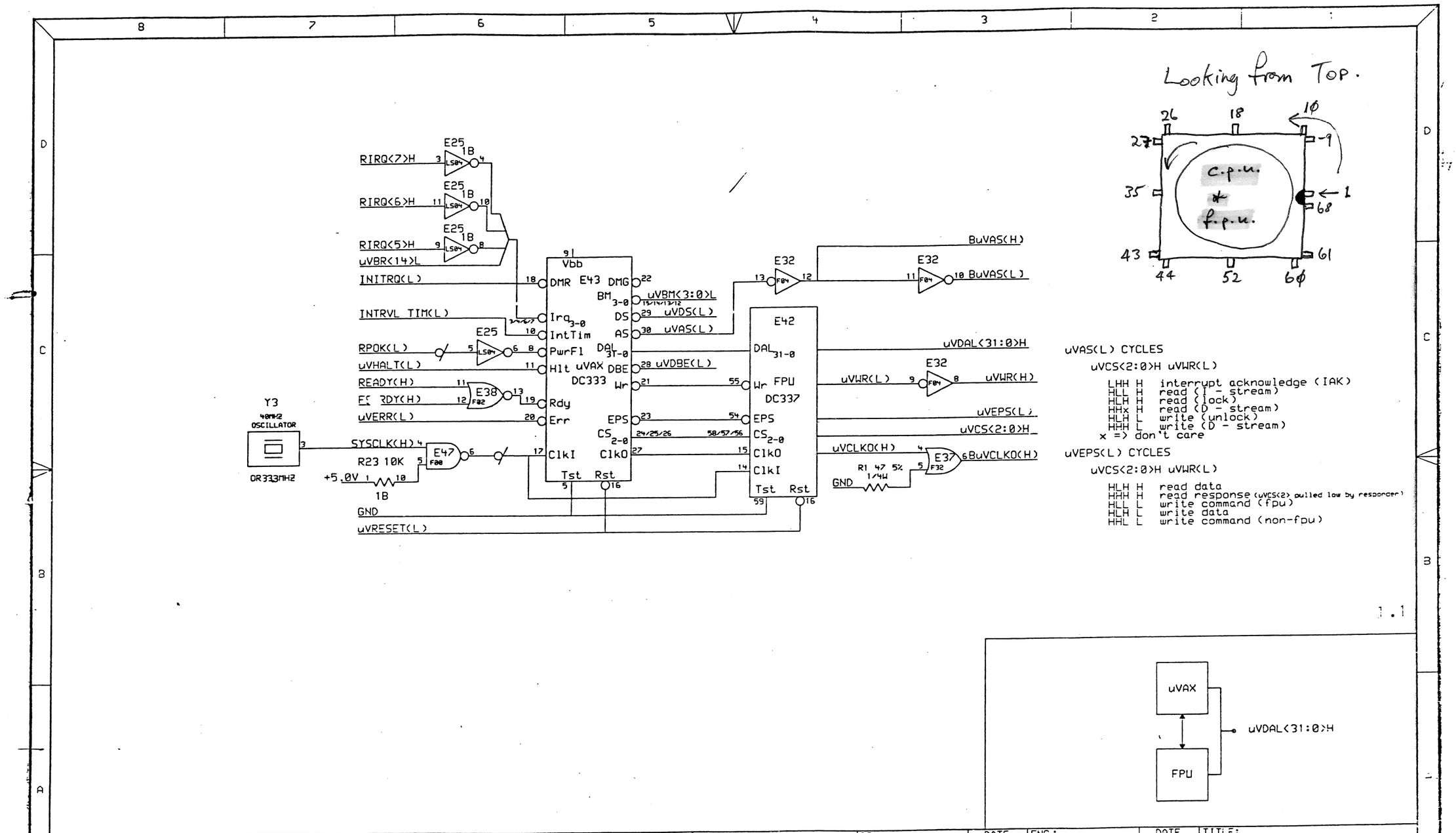

"THIS DRAWING AND SPECIFICATIONS, HEREIN, ARE THE PROPERTY OF DIGITAL EQUIPMENT CORPORATION AND SHALL NOT BE REPRODUCED OR COPIED OR USED IN WHOLE OR IN PART AS THE BASIS FOR THE MANUFACTURE OR SALE OF ITEMS WITHOUT WRITTEN PERMISSION.
COPYRIGHT 1984 DIGITAL EQUIPMENT CORPORATION

REVISION HISTORY		
REV	ECO NUMBER	DATE
B	M7506-0001	24-MAR-85

DRAWING
TITLE=UVAX
ABBREV=UVAX←FPU
CIRCUIT←TYPE=uVAX/FPU
LAST←MODIFIED=Fri Nov 9 18:39:57 1984

DEFINE
X←FIRST=0
X←STEP=SIZE

digital

DRN: BARRY MASKAS	DATE 3-OCT-84	ENG: BARRY MASKAS	DATE 3-OCT-84
CHK'D: BARRY MASKAS	DATE 3-OCT-84	SHEET 1 OF 1	
		NEXT HIGHER ASSEMBLY:	

TITLE: uVAX & FPU

SIZE	CODE	NUMBER	REV
D	CS	M7506 -0 -1	B

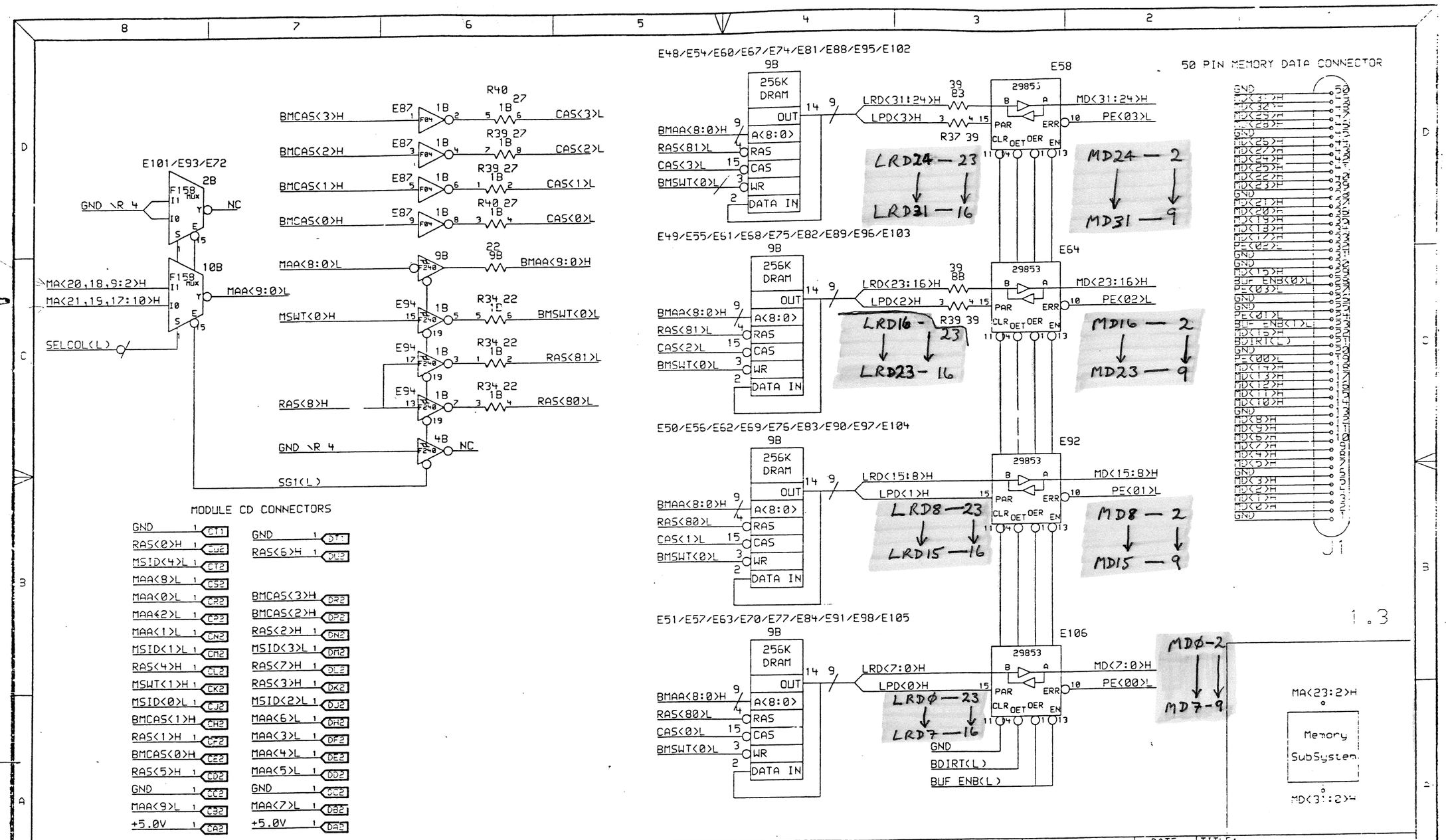

"THIS DRAWING AND SPECIFICATIONS, HEREIN, ARE THE PROPERTY OF DIGITAL EQUIPMENT CORPORATION AND SHALL NOT BE REPRODUCED OR COPIED OR USED IN WHOLE OR IN PART AS THE BASIS FOR THE MANUFACTURE OR SALE OF ITEMS WITHOUT WRITTEN PERMISSION.

COPYRIGHT! 984 DIGITAL EQUIPMENT CORPORATION

REVISION HISTORY		
REV	ECO NUMBER	DATE
B	M7505-M100	

DRAWING
TITLE=MEM
ABBREV=MEM
CIRCUIT←TYPE=MEMEORY
LAST←MODIFIED=Mon Oct 29 09:26:41 1984

DEFINE
X←FIRST=0
X←STEP=SIZE

digital

DRN: BARRY MASKAS	DATE 3-OCT-84	ENG: BARRY MASKAS	DATE 3-OCT-84
CHK'D: BARRY MASKAS	DATE 3-OCT-84	SHEET 1 OF 1	
		NEXT HIGHER ASSEMBLY:	

TITLE: Memory SubSystem

SIZE	CODE	NUMBER	REV
D	CS	M7505 -0 -7	B

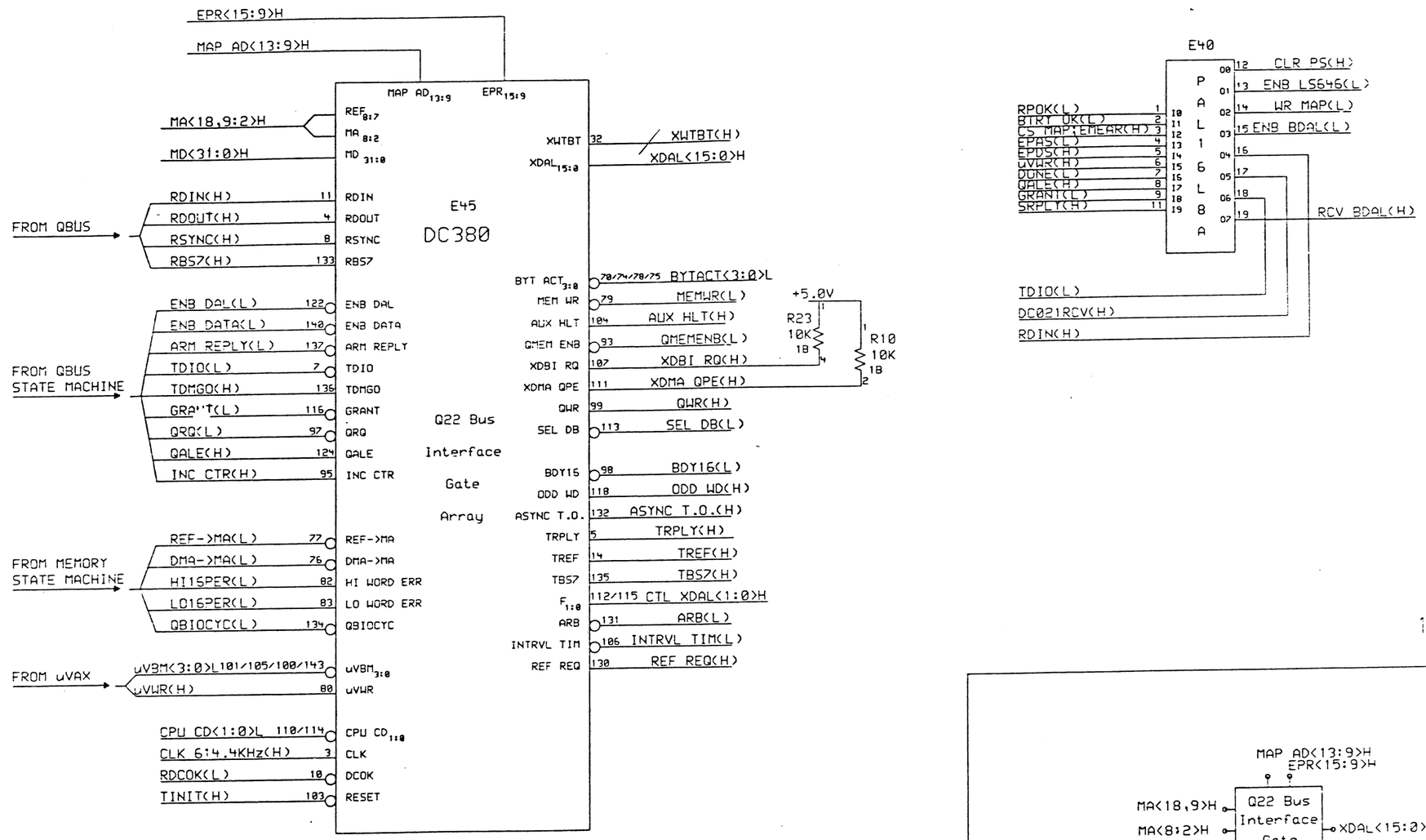

"THIS DRAWING AND SPECIFICATIONS, HEREIN, ARE THE PROPERTY OF DIGITAL EQUIPMENT CORPORATION AND SHALL NOT BE REPRODUCED OR COPIED OR USED IN WHOLE OR IN PART AS THE BASIS FOR THE MANUFACTURE OR SALE OF ITEMS WITHOUT WRITTEN PERMISSION.
COPYRIGHT © 1984 DIGITAL EQUIPMENT CORPORATION

REVISION HISTORY		
REV	ECO NUMBER	DATE
B	M7505-MC00	[illegible]

DRAWING
TITLE=GATOR2
ABBREV=GA2
CIRCUIT←TYPE=GATE←ARRAY
LAST←MODIFIED=Sun Oct 7 18:31:56 1984

DEFINE
X←FIRST=0
X←STEP=SIZE

digital

DRN: R. McNamara	DATE 3-OCT-84	ENG: R. McNamara	DATE 3-OCT-84
CHK'D: R. McNamara	DATE 3-OCT-84	SHEET 1 OF 1	
		NEXT HIGHER ASSEMBLY:	

TITLE: Q22 Bus Interface Gate Array

SIZE	CODE	NUMBER	REV
D	CS	M7505-2-2	B

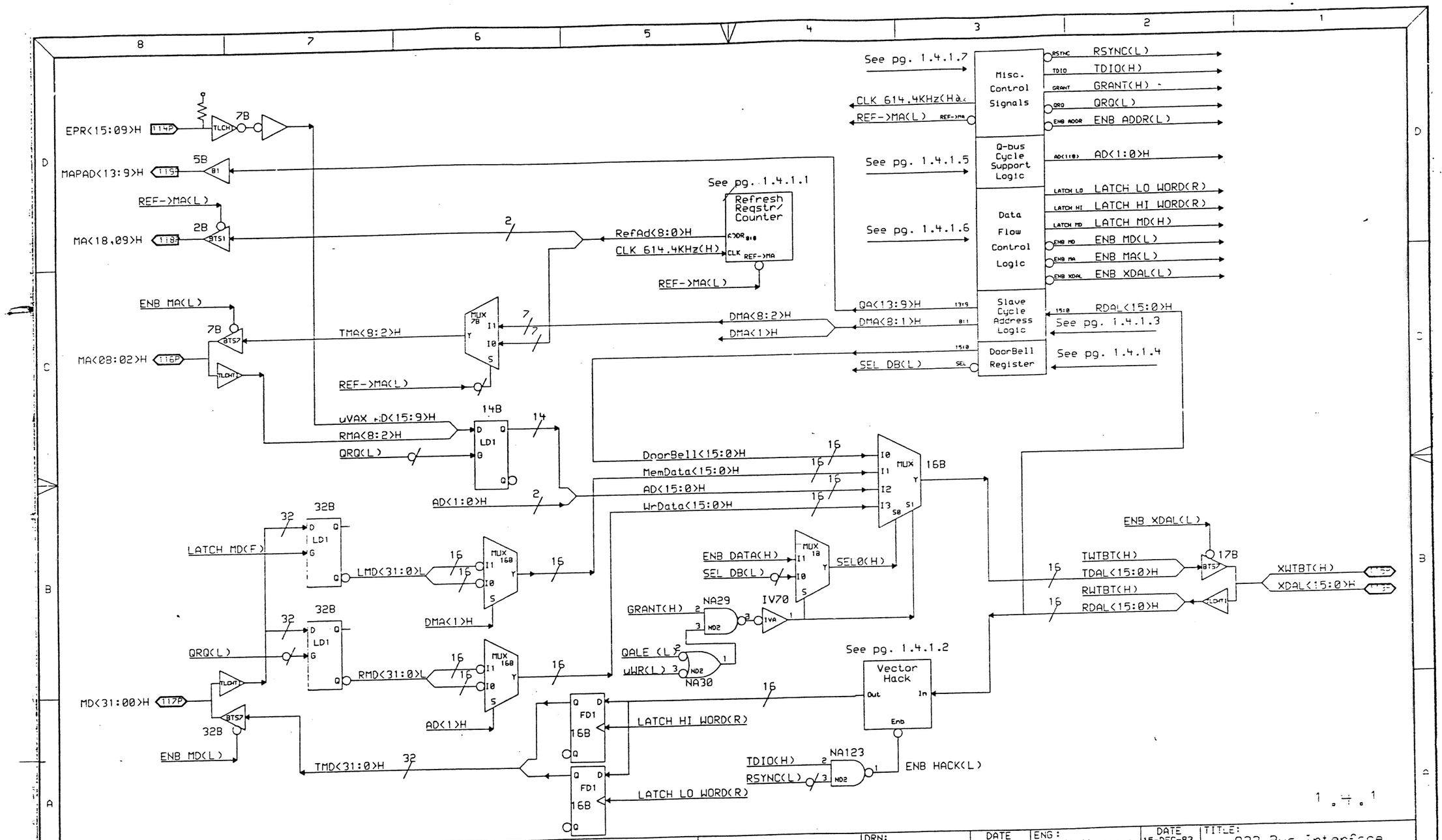

"THIS DRAWING AND SPECIFICATIONS, HEREIN, ARE THE PROPERTY OF DIGITAL EQUIPMENT CORPORATION AND SHALL NOT BE REPRODUCED OR COPIED OR USED IN WHOLE OR IN PART AS THE BASIS FOR THE MANUFACTURE OR SALE OF ITEMS WITHOUT WRITTEN PERMISSION.
COPYRIGHT 1984 DIGITAL EQUIPMENT CORPORATION

REVISION HISTORY		
REV	ECO NUMBER	DATE
B	M7505-MUC	

DRAWING
TITLE=GA2
ABBREV=GA2
LAST←MODIFIED=Tue Oct 9 14:46:23 1984

DEFINE
X←FIRST=0
X←STEP=SIZE

digital

DRN: R. McNamara	DATE 15-DEC-83	ENG: R. McNamara	DATE 15-DEC-83
CHK'D: R. McNamara	DATE 15-DEC-83	SHEET 1 OF 1	
		NEXT HIGHER ASSEMBLY:	

TITLE: Q22 Bus Interface Gate Array

SIZE	CODE	NUMBER	REV
D	CS	M7505 -0 -J	-

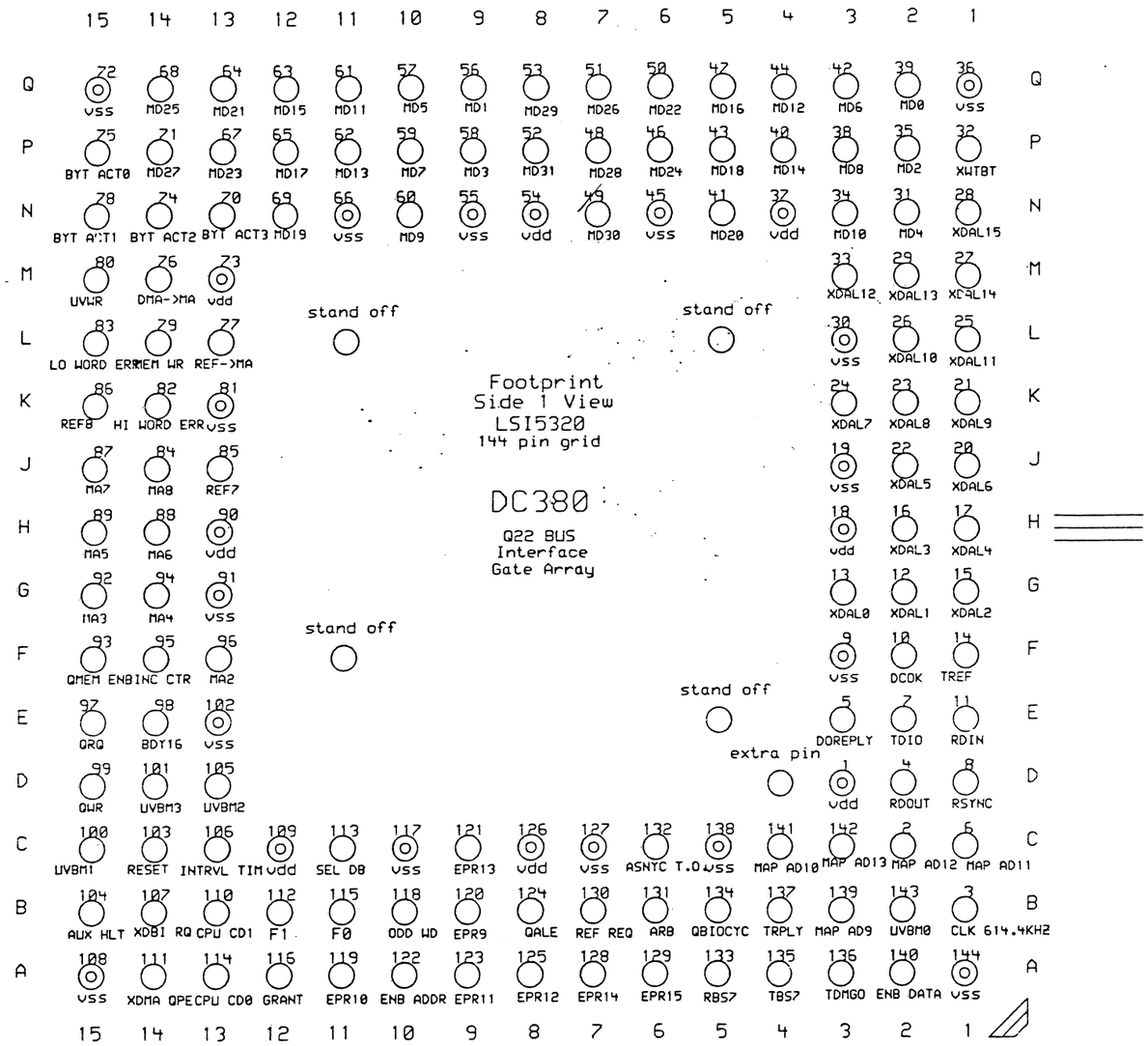

1.4.2

"THIS DRAWING AND SPECIFICATIONS, HEREIN, ARE THE PROPERTY OF DIGITAL EQUIPMENT CORPORATION AND SHALL NOT BE REPRODUCED OR COPIED OR USED IN WHOLE OR IN PART AS THE BASIS FOR THE MANUFACTURE OR SALE OF ITEMS WITHOUT WRITTEN PERMISSION.
COPYRIGHT 1984 DIGITAL EQUIPMENT CORPORATION

REVISION HISTORY		
REV	ECO NUMBER	DATE
B	M7605-M0001	18-MAY-84

digital

DRN: R. McNamara	DATE 18-MAY-84	ENG: R. McNamara	DATE 18-MAY-84	TITLE: DC380 PAD ASSIGNMENT TOP VIEW LL5320 IN 144 PIN GRID ARRAY	
CHK'D: R. McNamara	DATE 18-MAY-84	SHEET 1 OF 1			
		NEXT HIGHER ASSEMBLY:		SIZE D	CODE CS	NUMBER M7605 -2 -'0	REV B

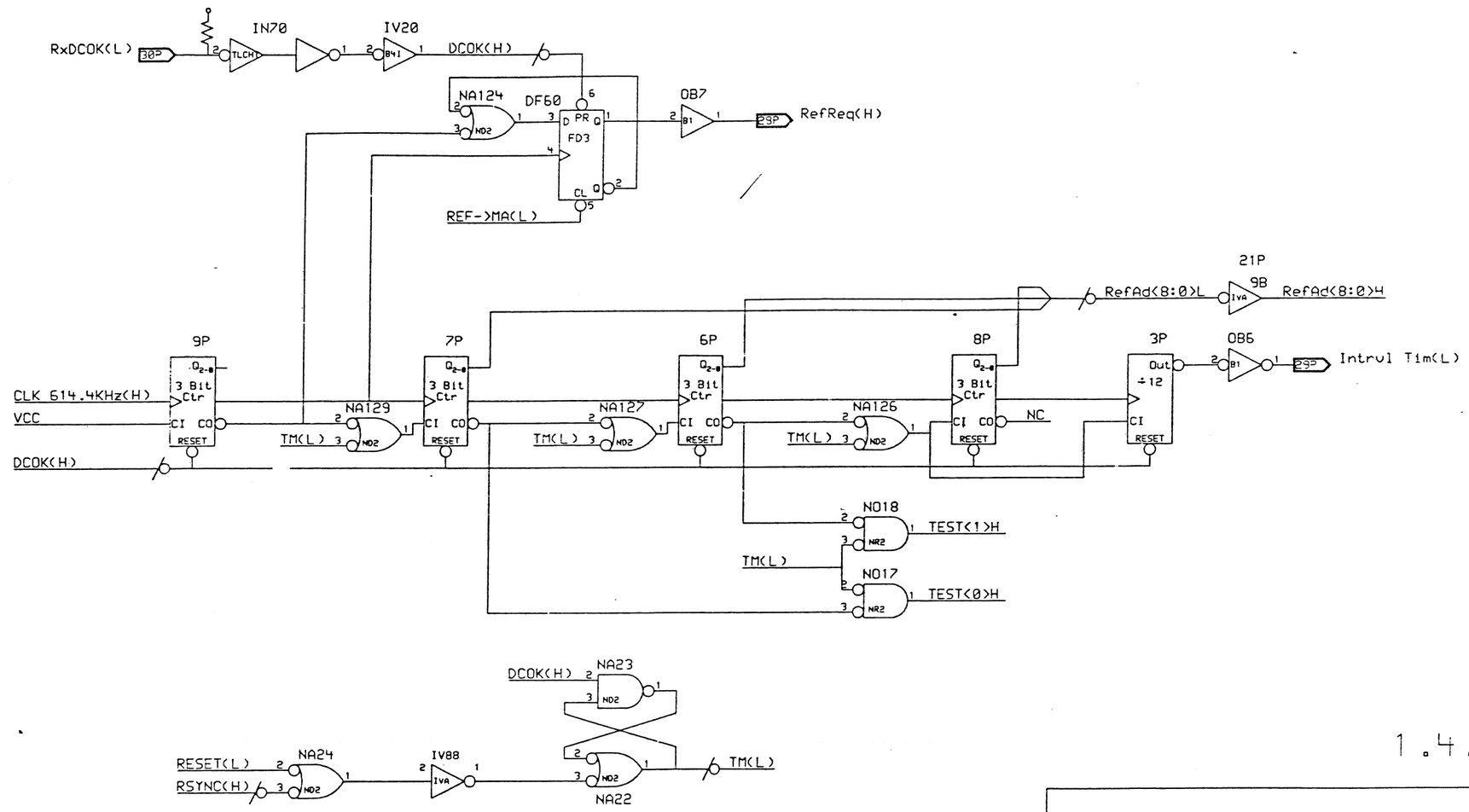

"THIS DRAWING AND SPECIFICATIONS, HEREIN, ARE THE PROPERTY OF DIGITAL EQUIPMENT CORPORATION AND SHALL NOT BE REPRODUCED OR COPIED OR USED IN WHOLE OR IN PART AS THE BASIS FOR THE MANUFACTURE OR SALE OF ITEMS WITHOUT WRITTEN PERMISSION.

COPYRIGHT 1984 DIGITAL EQUIPMENT CORPORATION

REVISION HISTORY		
REV	ECO NUMBER	DATE
B	M7626-MCO-0045	

DRAWING

LAST←MODIFIED=Wed Oct 10 19:06:07 1984

digital

DRN: R. McNamara	DATE 13-NOV-83	ENG: R. McNamara	DATE 13-NOV-83
CHK'D: R. McNamara	DATE 13-NOV-83	SHEET 1 OF 1	
		NEXT HIGHER ASSEMBLY:	

TITLE: REFRESH LOGIC/COUNTER

SIZE	CODE	NUMBER	REV
D	CS	M7626 -0 -11	B

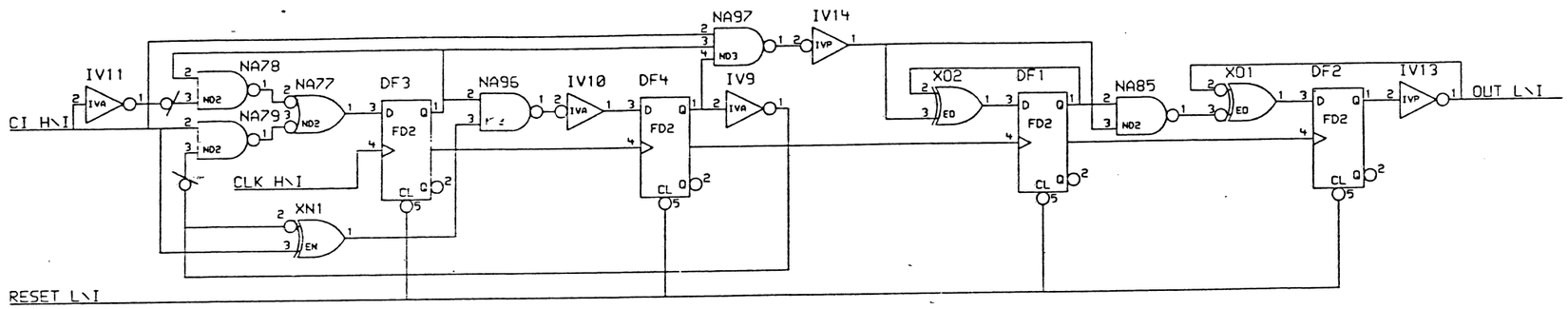

DIVIDE BY 3

DIVIDE BY 4

1.4.1.1.1

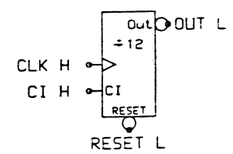

"THIS DRAWING AND SPECIFICATIONS, HEREIN, ARE THE PROPERTY OF DIGITAL EQUIPMENT CORPORATION AND SHALL NOT BE REPRODUCED OR COPIED OR USED IN WHOLE OR IN PART AS THE BASIS FOR THE MANUFACTURE OR SALE OF ITEMS WITHOUT WRITTEN PERMISSION.
COPYRIGHT 1984 DIGITAL EQUIPMENT CORPORATION

REVISION HISTORY		
REV	ECO NUMBER	DATE
B	M7505	

DRAWING
TITLE=DIV BY 12
ABBREV=DIV12
LAST←MODIFIED=NOT WRITTEN

DEFINE
X←FIRST=0
X←STEP=SIZE

digital

DRN: R. McNamara	DATE 13-NOV-83	ENG: R. McNamara	DATE 13-NOV-83
CHK'D: R. McNamara	DATE 13-NOV-83	SHEET 1 OF 1	
		NEXT HIGHER ASSEMBLY:	

TITLE: Divide by 12

SIZE	CODE	NUMBER	REV
D	CS	M7505 -0 -12	B

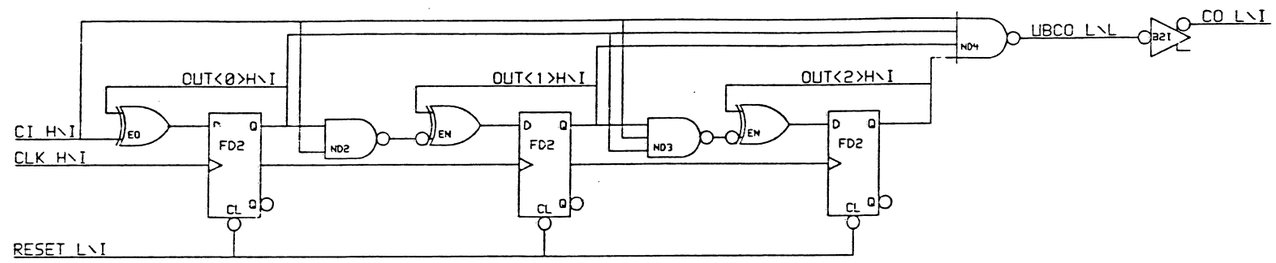

1.4.1.1.2

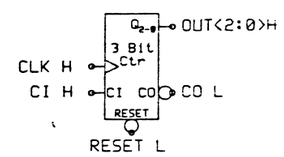

"THIS DRAWING AND SPECIFICATIONS, HEREIN, ARE THE PROPERTY OF DIGITAL EQUIPMENT CORPORATION AND SHALL NOT BE REPRODUCED OR COPIED OR USED IN WHOLE OR IN PART AS THE BASIS FOR THE MANUFACTURE OR SALE OF ITEMS WITHOUT WRITTEN PERMISSION.
COPYRIGHT©1984 DIGITAL EQUIPMENT CORPORATION

REVISION HISTORY		
REV	ECO NUMBER	DATE
B	M7606 MLO	04-JAN-77

DRAWING
TITLE=3 BIT CTR
ABBREV=3BCTR
CIRCUIT←TYPE=3BITCTR
LAST←MODIFIED=Sat Oct 20 18:47:47 1984

DEFINE
X←FIRST=0
X←STEP=SIZE

digital

DRN: R. McNamara	DATE 6-NOV-83	ENG: R. McNamara	DATE 6-NOV-83	TITLE: Synchronous 3 Bit Counter
CHK'D: R. McNamara	DATE 6-NOV-83	SHEET 1 OF 1		
		NEXT HIGHER ASSEMBLY:		SIZE D · CODE CS · NUMBER M7606 -0 -3 · REV B

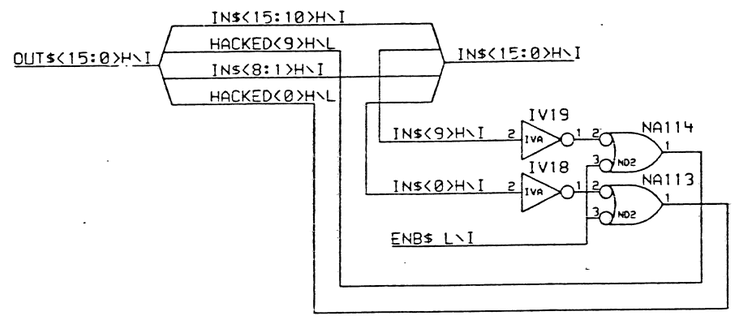

1.4.1.2

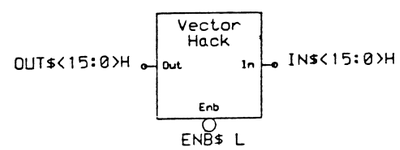

"THIS DRAWING AND SPECIFICATIONS, HEREIN, ARE THE PROPERTY OF DIGITAL EQUIPMENT CORPORATION AND SHALL NOT BE REPRODUCED OR COPIED OR USED IN WHOLE OR IN PART AS THE BASIS FOR THE MANUFACTURE OR SALE OF ITEMS WITHOUT WRITTEN PERMISSION.
COPYRIGHT 1984 DIGITAL EQUIPMENT CORPORATION

REVISION HISTORY		
REV	ECO NUMBER	DATE
B	M7526-MLC01	

DRAWING
TITLE=VECTOR HACK
ABBREV=VCTRHCK
LAST←MODIFIED=Wed Oct 10 19:16:56 1984

DEFINE
X←FIRST=0
X←STEP=SIZE

digital

DRN: R. McNamara	DATE 9-NOV-83	ENG: R. McNamara	DATE 9-NOV-83
CHK'D: R. McNamara	DATE 9-NOV-83	SHEET 1 OF 1	
		NEXT HIGHER ASSEMBLY:	

TITLE: Vector Hack

SIZE	CODE	NUMBER	REV
D	CS	M7525 -0 -'4	B

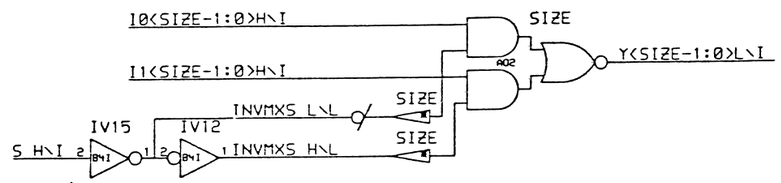

1.4.1.2A

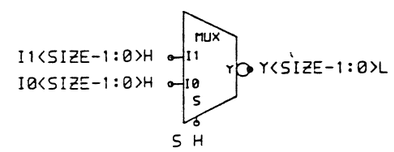

"THIS DRAWING AND SPECIFICATIONS, HEREIN, ARE THE PROPERTY OF DIGITAL EQUIPMENT CORPORATION AND SHALL NOT BE REPRODUCED OR COPIED OR USED IN WHOLE OR IN PART AS THE BASIS FOR THE MANUFACTURE OR SALE OF ITEMS WITHOUT WRITTEN PERMISSION.
COPYRIGHT 1984 DIGITAL EQUIPMENT CORPORATION

REVISION HISTORY		
REV	ECO NUMBER	DATE
B	M7605 MOD	

DRAWING
TITLE=INV MUX
ABBREV=INVMX
LAST←MODIFIED=Wed Oct 10 19:20:46 1984

DEFINE
X←FIRST=0
X←STEP=SIZE

digital

DRN: R. McNamara	DATE 23-Jan-84	ENG: R. McNamara	DATE 23-Jan-84
CHK'D: R. McNamara	DATE 23-Jan-84	SHEET 1 OF 1	
		NEXT HIGHER ASSEMBLY:	

TITLE: Inverting MUX Logic

SIZE	CODE	NUMBER	REV
D	CS	M7605 -0 -15	B

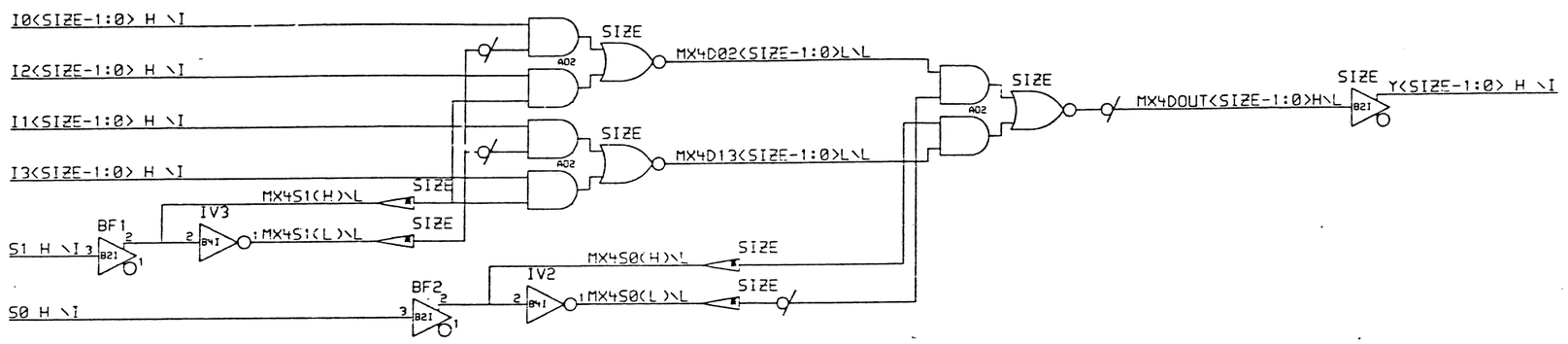

1.4.1.2B

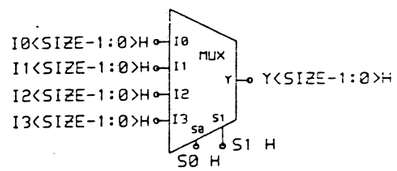

"THIS DRAWING AND SPECIFICATIONS, HEREIN, ARE THE PROPERTY OF DIGITAL EQUIPMENT CORPORATION AND SHALL NOT BE REPRODUCED OR COPIED OR USED IN WHOLE OR IN PART AS THE BASIS FOR THE MANUFACTURE OR SALE OF ITEMS WITHOUT WRITTEN PERMISSION.
COPYRIGHT 1984 DIGITAL EQUIPMENT CORPORATION

REVISION HISTORY		
REV	ECO NUMBER	DATE
B	M76CSM	20-JAN-84

DRAWING
TITLE=4MUX
ABBREV=4MX

DEFINE
X←FIRST=0
X←STEP=SIZE
LAST←MODIFIED=Wed Oct 10 19:23:47 1984

digital

DRN: R. McNamara	DATE 10-JAN-84	ENG: R. McNamara	DATE 10-JAN-84
CHK'D: R. McNamara	DATE 10-JAN-84	SHEET 1 OF 1	
		NEXT HIGHER ASSEMBLY:	

TITLE: 4 to 1 MUX

SIZE	CODE	NUMBER	REV
D	CS	M7505-0-16	B

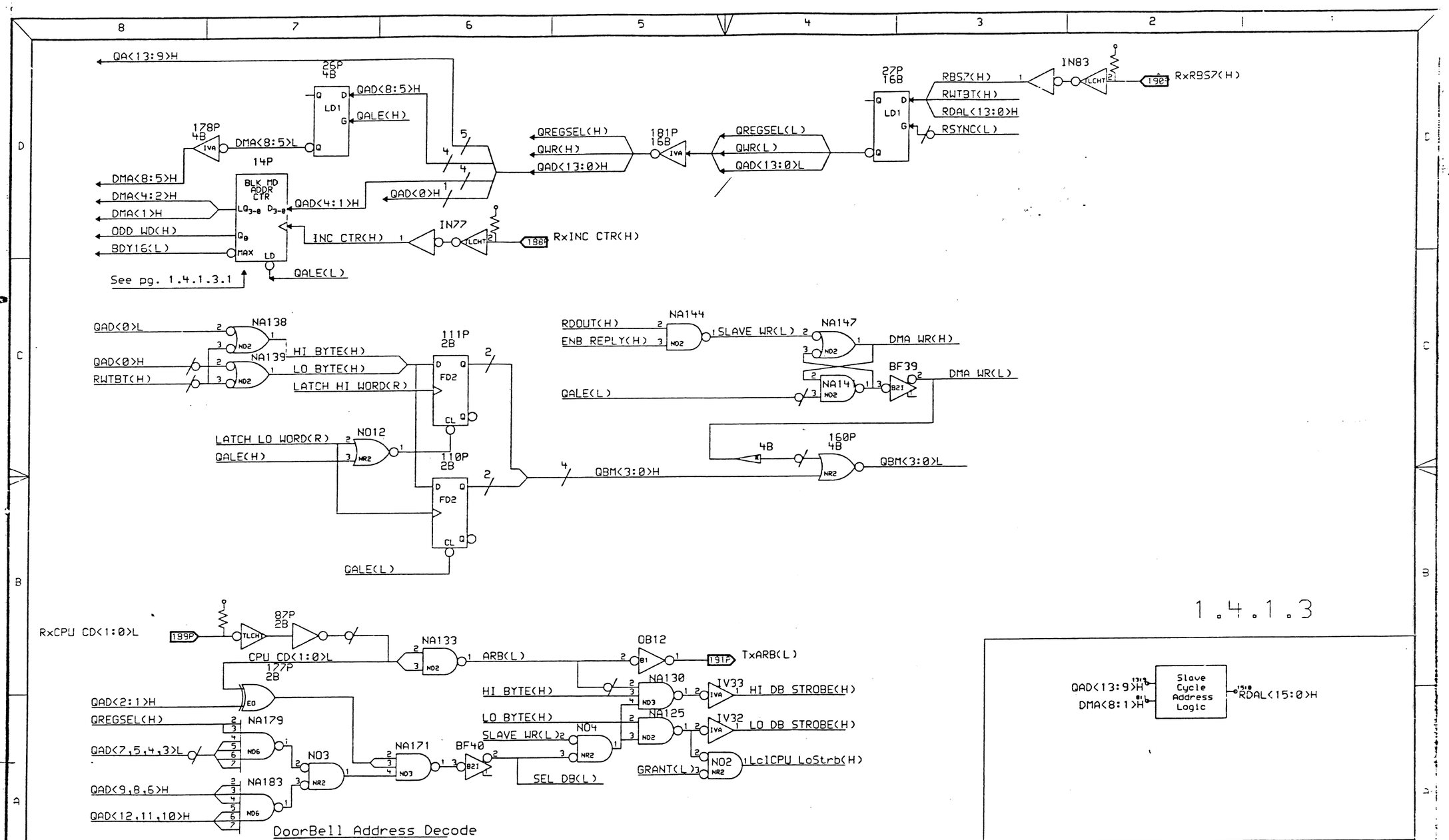

"THIS DRAWING AND SPECIFICATIONS, HEREIN, ARE THE PROPERTY OF DIGITAL EQUIPMENT CORPORATION AND SHALL NOT BE REPRODUCED OR COPIED OR USED IN WHOLE OR IN PART AS THE BASIS FOR THE MANUFACTURE OR SALE OF ITEMS WITHOUT WRITTEN PERMISSION.
COPYRIGHT 1984 DIGITAL EQUIPMENT CORPORATION

REVISION HISTORY		
REV	ECO NUMBER	DATE
B	M7505-M001	

DRAWING
LAST←MODIFIED=Wed Oct 10 19:32:56 1984

digital

DRN: R. McNamara	DATE 16-NOV-83	ENG: R. McNamara	DATE 16-NOV-83
CHK'D: R. McNamara	DATE 16-NOV-83	SHEET 1 OF 1	
		NEXT HIGHER ASSEMBLY:	

TITLE: Q-bus Support Logic

SIZE	CODE	NUMBER	REV
D	05	M7505 -2 -17	B

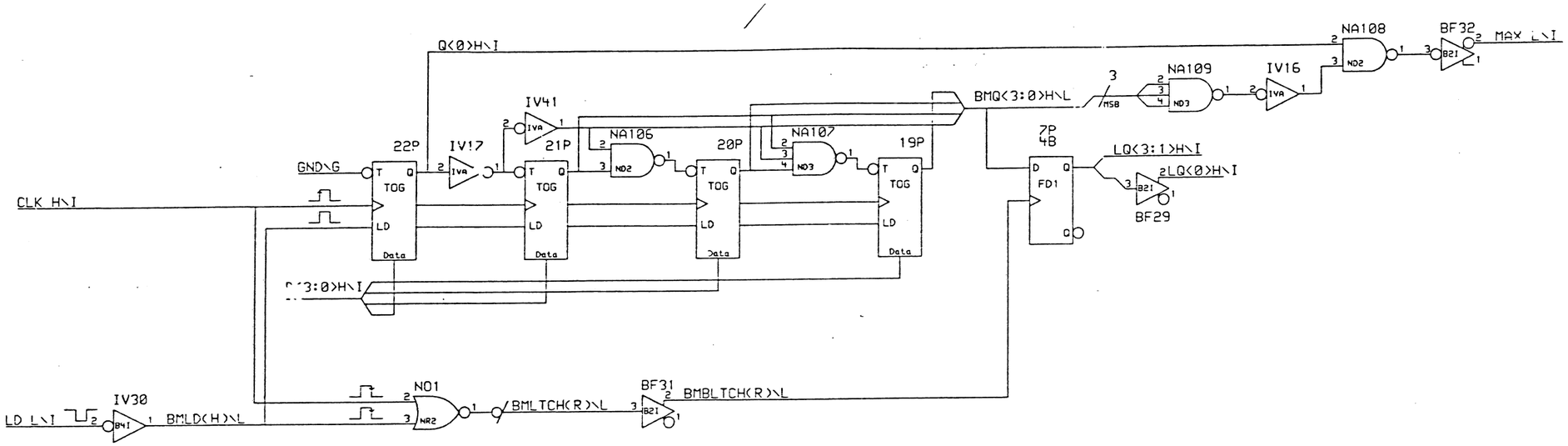

1.4.1.3.1

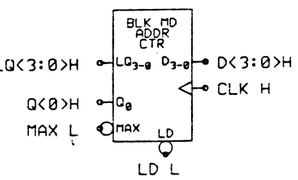

"THIS DRAWING AND SPECIFICATIONS, HEREIN, ARE THE PROPERTY OF DIGITAL EQUIPMENT CORPORATION AND SHALL NOT BE REPRODUCED OR COPIED OR USED IN WHOLE OR IN PART AS THE BASIS FOR THE MANUFACTURE OR SALE OF ITEMS WITHOUT WRITTEN PERMISSION.
COPYRIGHT 1984 DIGITAL EQUIPMENT CORPORATION

REVISION HISTORY		
REV	ECO NUMBER	DATE
A	M7825-M0011	[illegible]

DRAWING
TITLE=BLK MD CTR
ABBREV=BMCTR
CIRCUIT←TYPE=BLKMDCTR
LAST←MODIFIED=Wed Oct 10 19:28:01 1984

DEFINE
X←FIRST=0
X←STEP=SIZE

digital

DRN:	DATE	ENG:	DATE	TITLE:
R. McNamara	6-NOV-83	R. McNamara	6-NOV-83	BLK MD CTR LOGIC
CHK'D: R. McNamara	DATE 6-NOV-83	SHEET 1 OF 1		
		NEXT HIGHER ASSEMBLY:		SIZE D · CODE CS · NUMBER M7505 -0 -18 · REV F

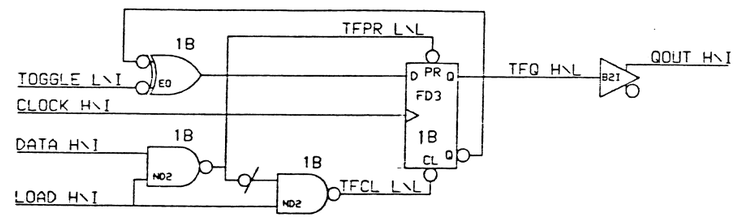

1.4.1.3.1.1

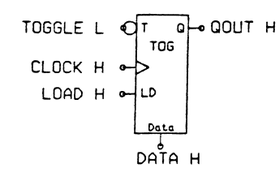

THIS DRAWING AND SPECIFICATIONS, HEREIN, ARE THE PROPERTY OF DIGITAL EQUIPMENT CORPORATION AND SHALL NOT BE REPRODUCED OR COPIED OR USED IN WHOLE OR IN PART AS THE BASIS FOR THE MANUFACTURE OR SALE OF ITEMS WITHOUT WRITTEN PERMISSION.
COPYRIGHT 1984 DIGITAL EQUIPMENT CORPORATION

REVISION HISTORY		
REV	ECO NUMBER	DATE
B	M7606-AL001	[illegible]

DRAWING
TITLE=TOG
ABBREV=TOG

DEFINE
X←FIRST=0
X←STEP=SIZE
LAST←MODIFIED=Wed Oct 10 19:57:28 1984

digital

DRN: R. McNamara	DATE 6-NOV-83	ENG. R. McNamara	DATE 6-NOV-83
CHK'D: R. McNamara	DATE 6-NOV-83	SHEET 1 OF 1	
		NEXT HIGHER ASSEMBLY:	

TITLE: TOGGLE FLOP

SIZE D | CODE [illegible] | NUMBER M7606-[illegible] | REV. B

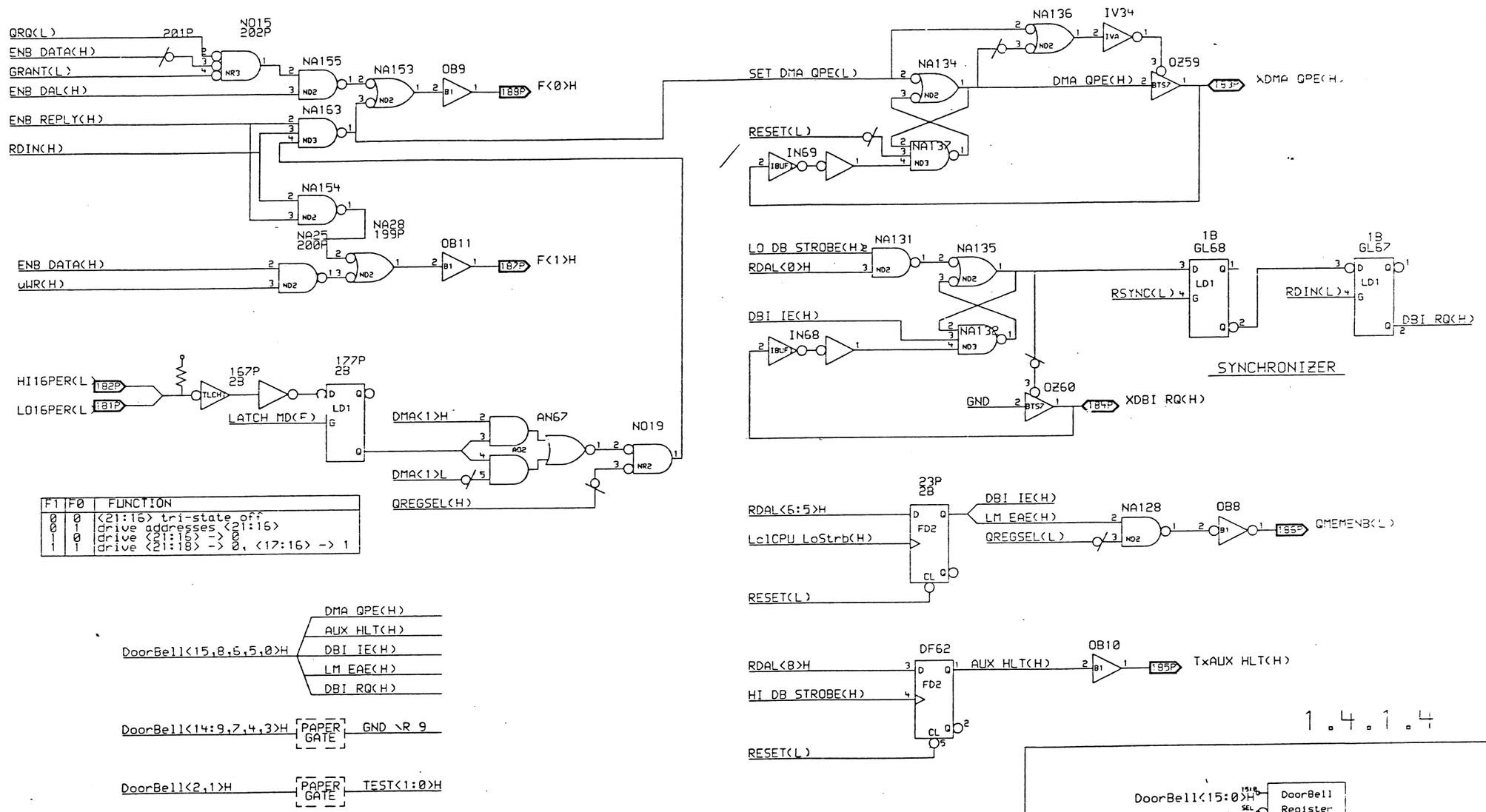

F1	F0	FUNCTION
0	0	(21:16) tri-state off
0	1	drive addresses (21:16)
1	0	drive (21:16) -> 0
1	1	drive (21:18) -> 0, (17:16) -> 1

"THIS DRAWING AND SPECIFICATIONS, HEREIN, ARE THE PROPERTY OF DIGITAL EQUIPMENT CORPORATION AND SHALL NOT BE REPRODUCED OR COPIED OR USED IN WHOLE OR IN PART AS THE BASIS FOR THE MANUFACTURE OR SALE OF ITEMS WITHOUT WRITTEN PERMISSION.
COPYRIGHT 1984 DIGITAL EQUIPMENT CORPORATION

REVISION HISTORY		
REV	ECO NUMBER	DATE
B	M-CS-MLC01	

DRAWING
LAST+MODIFIED=Wed Oct 10 19:36:34 1984

digital

DRN: R. McNamara	DATE 1-NOV-83	ENG: R. McNamara	DATE 1-NOV-83
CHK'D: R. McNamara	DATE 1-NOV-83	SHEET 1 OF	
		NEXT HIGHER ASSEMBLY:	

TITLE: Q-Bus Support Logic

SIZE D | CODE 05 | NUMBER M7505-0-20 | REV B

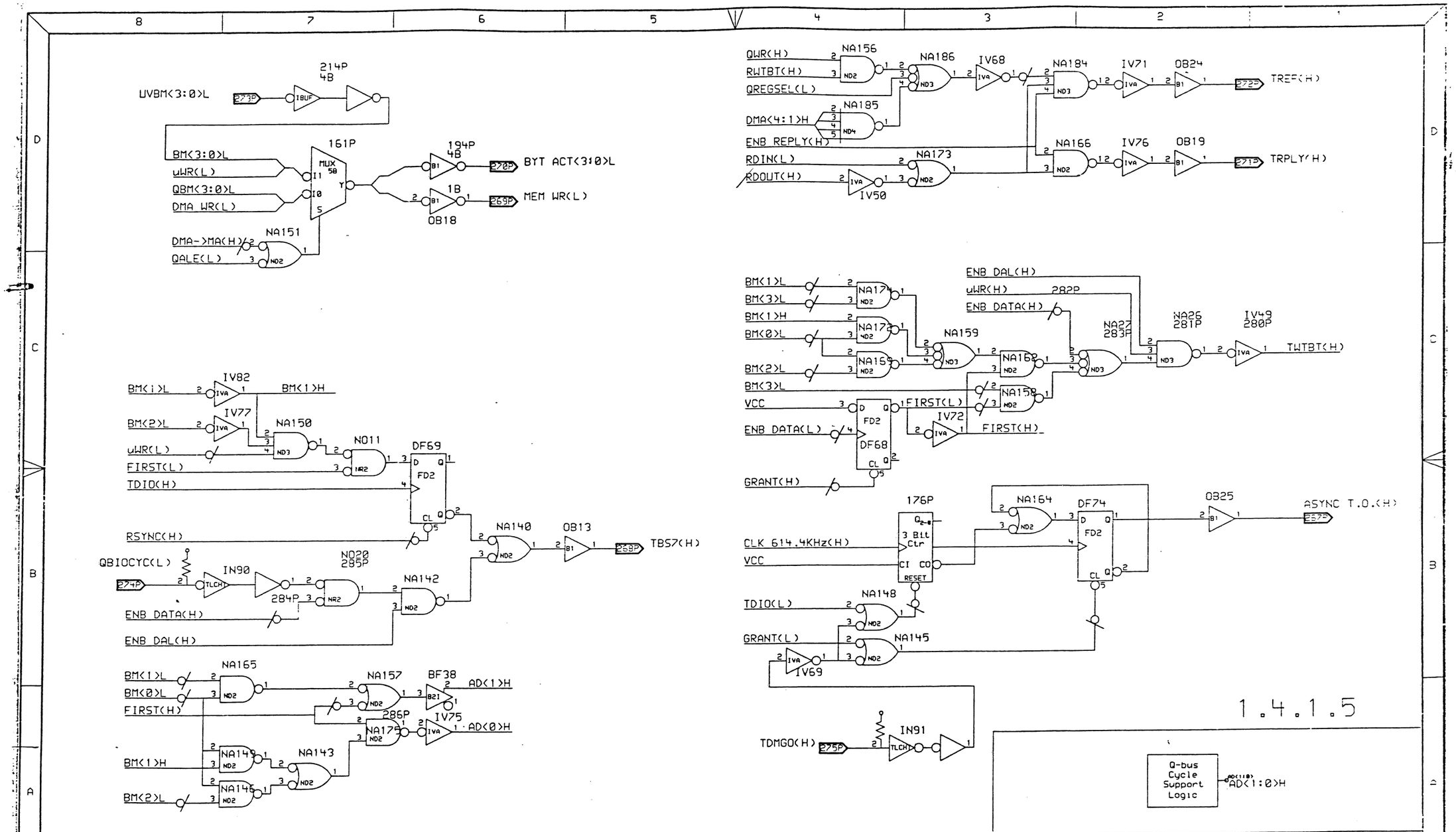

"THIS DRAWING AND SPECIFICATIONS, HEREIN, ARE THE PROPERTY OF DIGITAL EQUIPMENT CORPORATION AND SHALL NOT BE REPRODUCED OR COPIED OR USED IN WHOLE OR IN PART AS THE BASIS FOR THE MANUFACTURE OR SALE OF ITEMS WITHOUT WRITTEN PERMISSION.
COPYRIGHT 1984 DIGITAL EQUIPMENT CORPORATION

REVISION HISTORY		
REV	ECO NUMBER	DATE
B	M7528-M00	

DRAWING
LAST←MODIFIED=Wed Oct 10 19:53:46 1984

digital

DRN: R. McNamara	DATE 21-OCT-83	ENG: R. McNamara	DATE 21-OCT-83
CHK'D: R. McNamara	DATE 21-OCT-83	SHEET 1 OF 1	
		NEXT HIGHER ASSEMBLY:	

TITLE: Q-bus Support Logic

SIZE	CODE	NUMBER	REV
D	05	M7528 -0 -21	B

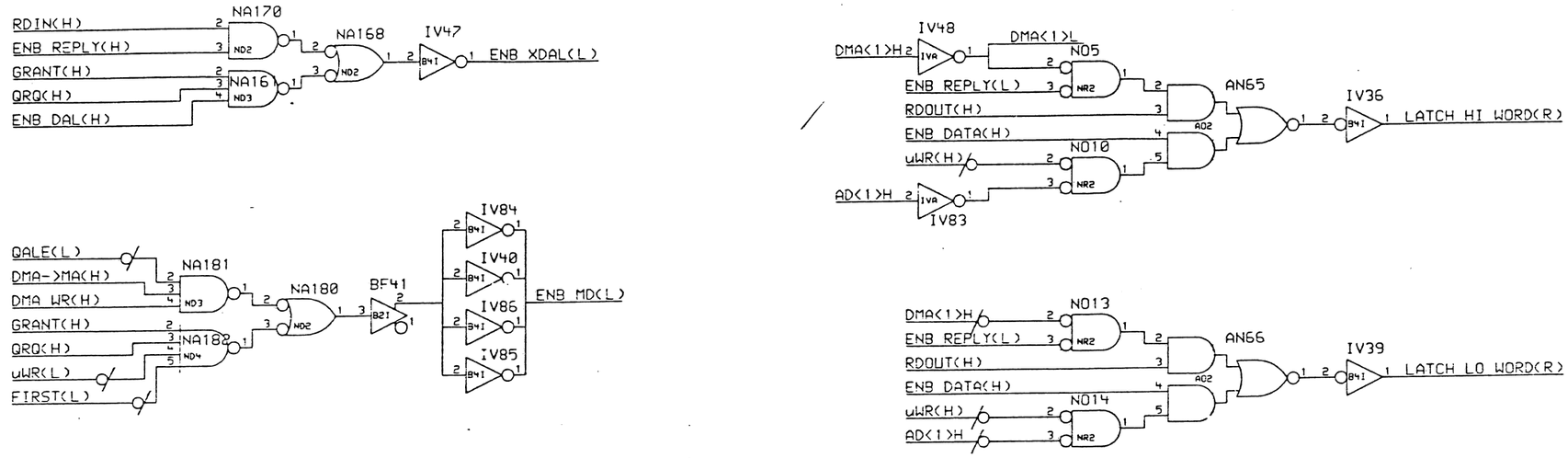

1.4.1.6

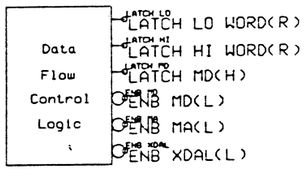

"THIS DRAWING AND SPECIFICATIONS, HEREIN, ARE THE PROPERTY OF DIGITAL EQUIPMENT CORPORATION AND SHALL NOT BE REPRODUCED OR COPIED OR USED IN WHOLE OR IN PART AS THE BASIS FOR THE MANUFACTURE OR SALE OF ITEMS WITHOUT WRITTEN PERMISSION.
COPYRIGHT 1984 DIGITAL EQUIPMENT CORPORATION

REVISION HISTORY		
REV	ECO NUMBER	DATE
B	M7505-M100	

DRAWING
LAST-MODIFIED=Wed Oct 10 19:45:31 1984

digital

DRN: R. McNamara	DATE 09-NOV-83	ENG: R. McNamara	DATE 09-NOV-83
CHK'D: R. McNamara	DATE 09-NOV-83	SHEET 1 OF 1	
		NEXT HIGHER ASSEMBLY:	

TITLE: Q-Bus Support Logic

SIZE D CODE 05 NUMBER M7505-0-22 REV B

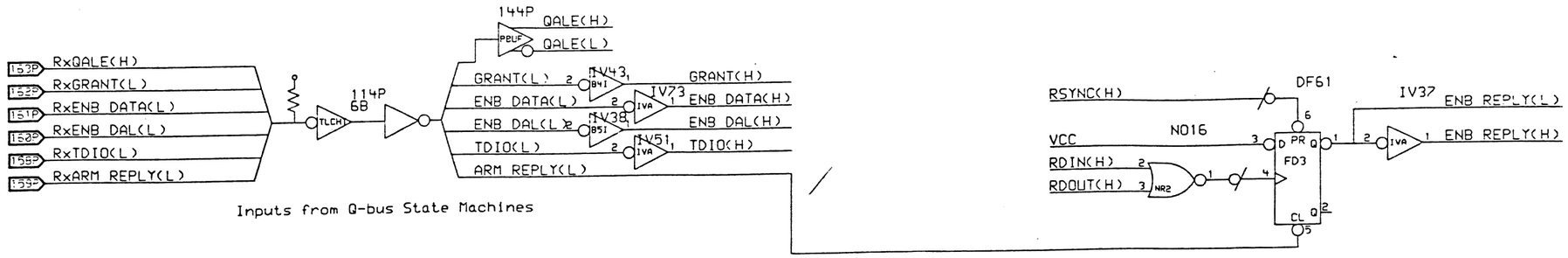

Inputs from Q-bus State Machines

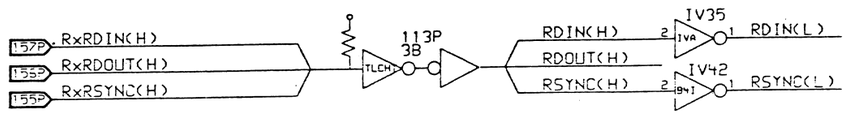

Q-bus Control Signal Inputs

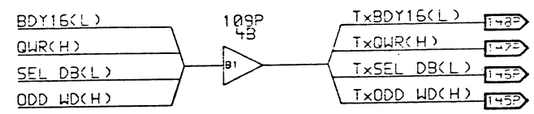

Outputs to Q-bus State Machines

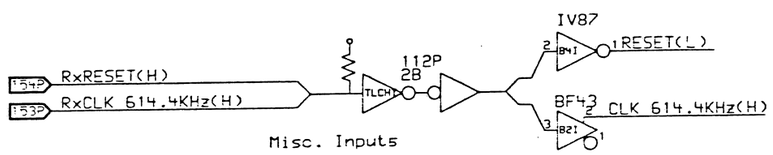

Misc. Inputs

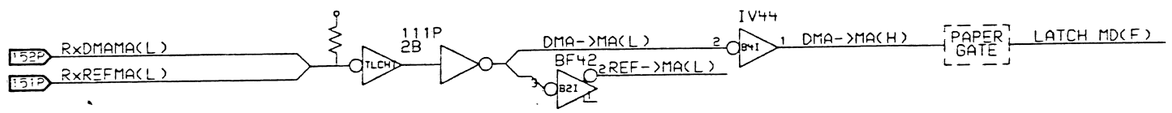

Inputs from Main Memory Controller

1.4.1.7

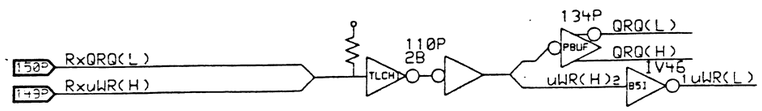

Inputs from uVAX cycle machine

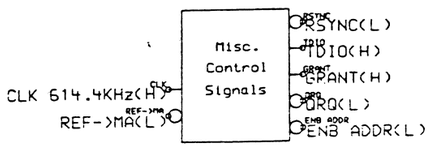

THIS DRAWING AND SPECIFICATIONS, HEREIN, ARE THE PROPERTY OF DIGITAL EQUIPMENT CORPORATION AND SHALL NOT BE REPRODUCED OR COPIED OR USED IN WHOLE OR IN PART AS THE BASIS FOR THE MANUFACTURE OR SALE OF ITEMS WITHOUT WRITTEN PERMISSION.
COPYRIGHT 1984 DIGITAL EQUIPMENT CORPORATION

REVISION HISTORY		
REV	ECO NUMBER	DATE
B	M7526M00	

DRAWING
LAST MODIFIED=Wed Oct 10 19:49:41 1984

DRN: R. McNamara	DATE 11-NOV-83	ENG: R. McNamara	DATE 11-NOV-83
CHK'D: R. McNamara	DATE 11-NOV-83	SHEET 1 OF 1	
		NEXT HIGHER ASSEMBLY:	

TITLE: Q-bus Support Logic

SIZE	CODE	NUMBER	REV
D	05	M7525 -0 -23	B

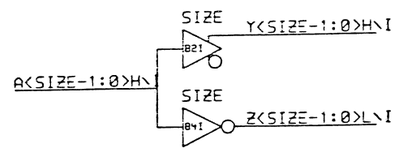

1.4.1.7.1

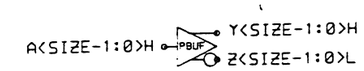

"THIS DRAWING AND SPECIFICATIONS, HEREIN, ARE THE PROPERTY OF DIGITAL EQUIPMENT CORPORATION AND SHALL NOT BE REPRODUCED OR COPIED OR USED IN WHOLE OR IN PART AS THE BASIS FOR THE MANUFACTURE OR SALE OF ITEMS WITHOUT WRITTEN PERMISSION.
COPYRIGHT 1984 DIGITAL EQUIPMENT CORPORATION

REVISION HISTORY		
REV	ECO NUMBER	DATE
B	M500 M100	

DRAWING
TITLE=PBUF
ABBREV=PBUF

DEFINE
X←FIRST=0
X←STEP=SIZE

LAST←MODIFIED=Wed Oct 10 20:01:17 1984

digital

DRN: R. McNamara	DATE 11-JAN-84	ENG: R. McNamara	DATE 11-JAN-84	TITLE: Power Buffer Macro	
CHK'D: R. McNamara	DATE 11-JAN-84	SHEET 1 OF 1			
		NEXT HIGHER ASSEMBLY:		SIZE D	CODE CS	NUMBER M7525 -0 -24	REV B

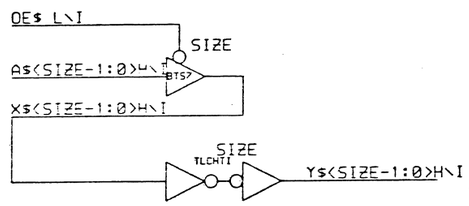

1.4.1.8

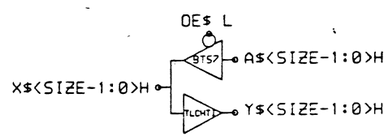

"THIS DRAWING AND SPECIFICATIONS, HEREIN, ARE THE PROPERTY OF DIGITAL EQUIPMENT CORPORATION AND SHALL NOT BE REPRODUCED OR COPIED OR USED IN WHOLE OR IN PART AS THE BASIS FOR THE MANUFACTURE OR SALE OF ITEMS WITHOUT WRITTEN PERMISSION.
COPYRIGHT 1984 DIGITAL EQUIPMENT CORPORATION

REVISION HISTORY		
REV	ECO NUMBER	DATE
B	M7526M00	[illegible]

DRAWING
TITLE=BIDIRECT
A3BREV=BI
LAST←MODIFIED=Wed Oct 10 20:06:46 1984

DEFINE
X←FIRST=0
X←STEP=SIZE

DRN: R. McNamara	DATE 11-NOV-83	ENG: R. McNamara	DATE 11-NOV-83
CHK'D: R. McNamara	DATE 11-NOV-83	SHEET 1 OF 1	
		NEXT HIGHER ASSEMBLY:	

TITLE: BIDIRECT BUFFER

SIZE	CODE	NUMBER	REV
D	CS	M7526 -0 -25	B

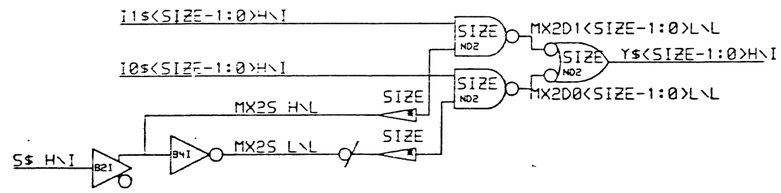

1.4.1.9

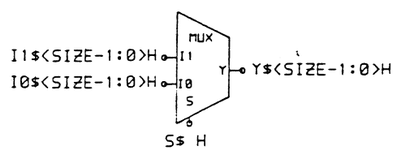

"THIS DRAWING AND SPECIFICATIONS, HEREIN, ARE THE PROPERTY OF DIGITAL EQUIPMENT CORPORATION AND SHALL NOT BE REPRODUCED OR COPIED OR USED IN WHOLE OR IN PART AS THE BASIS FOR THE MANUFACTURE OR SALE OF ITEMS WITHOUT WRITTEN PERMISSION.
COPYRIGHT 1984 DIGITAL EQUIPMENT CORPORATION

REVISION HISTORY		
REV	ECO NUMBER	DATE
A	M7606-M100	[illegible]

DRAWING
TITLE=MUX16
ABBREV=MX16
LAST←MODIFIED=Wed Oct 10 20:09:42 1984

DEFINE
X←FIRST=0
X←STEP=SIZE

digital

DRN: R. McNamara	DATE 8-NOV-83	ENG: R. McNamara	DATE 8-NOV-83
CHK'D: R. McNamara	DATE 8-NOV-83	SHEET 1 OF 1	
		NEXT HIGHER ASSEMBLY:	

TITLE: MUX LOGIC

SIZE D | CODE 05 | NUMBER M7606 -2 -26 | REV E

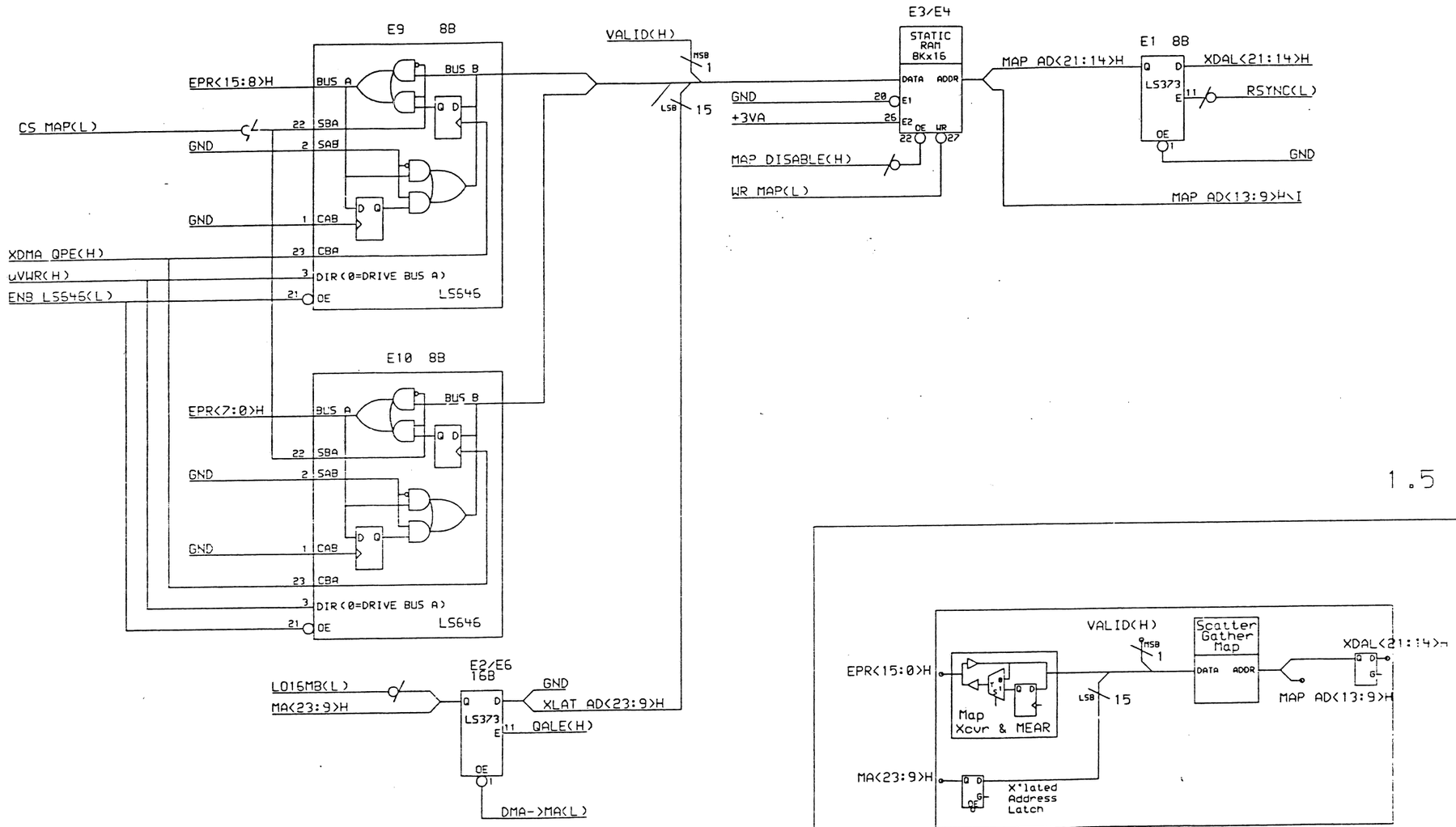

1.5

"THIS DRAWING AND SPECIFICATIONS, HEREIN, ARE THE PROPERTY OF DIGITAL EQUIPMENT CORPORATION AND SHALL NOT BE REPRODUCED OR COPIED OR USED IN WHOLE OR IN PART AS THE BASIS FOR THE MANUFACTURE OR SALE OF ITEMS WITHOUT WRITTEN PERMISSION.

COPYRIGHT 1984 DIGITAL EQUIPMENT CORPORATION

REVISION HISTORY		
REV	ECO NUMBER	DATE
3	M7605M001	

DRAWING
TITLE=MAP GROUP
ABBREV=MAP
CIRCUIT←TYPE=TRANS←MAP
LAST←MODIFIED=Sun Oct 7 18:33:49 1984

DEFINE
X←FIRST=0
X←STEP=SIZE

digital

DRN: R. McNamara	DATE 3-OCT-84	ENG: R. McNamara	DATE 3-OCT-84	TITLE: Translation Map Group
CHK'D: R. McNamara	DATE 3-OCT-84	SHEET 1 OF 1		
		NEXT HIGHER ASSEMBLY:		SIZE D · CODE CS · NUMBER M7605-0-27 · REV 3

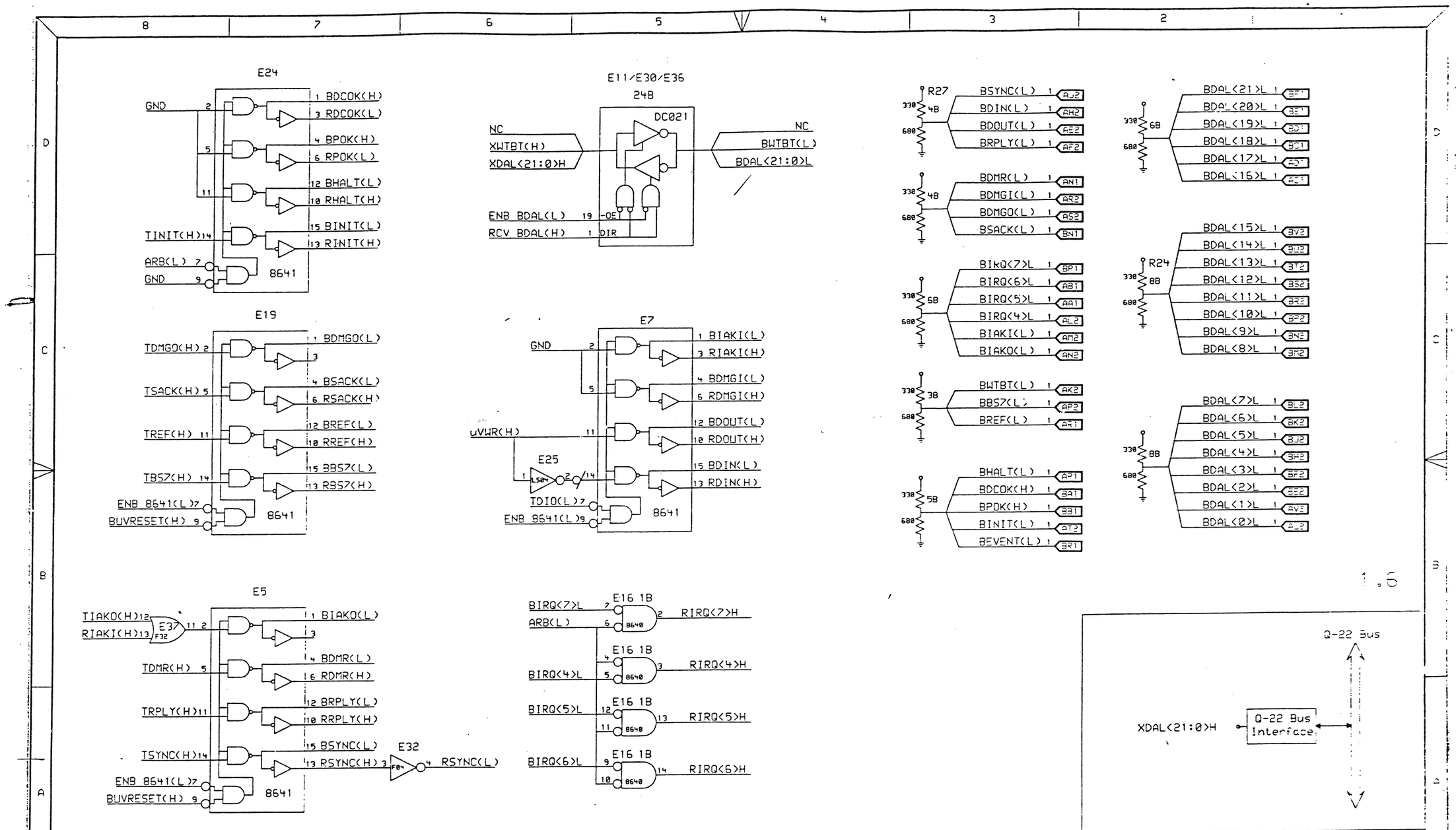

"THIS DRAWING AND SPECIFICATIONS, HEREIN, ARE THE PROPERTY OF DIGITAL EQUIPMENT CORPORATION AND SHALL NOT BE REPRODUCED OR COPIED OR USED IN WHOLE OR IN PART AS THE BASIS FOR THE MANUFACTURE OR SALE OF ITEMS WITHOUT WRITTEN PERMISSION.
COPYRIGHT 1984 DIGITAL EQUIPMENT CORPORATION

REVISION HISTORY		
REV	ECO NUMBER	DATE
B	M7505-M0011	[illegible]

DRAWING
TITLE=QBUS
ABBREV=QBUS
CIRCUIT←TYPE=QBUS←INTERFACE
LAST←MODIFIED=Fri Oct 12 14:31:20 1984

DEFINE
X←FIRST=0
X←STEP=SIZE

digital

DRN: R. McNamara	DATE 3-OCT-84	ENG: R. McNamara	DATE 3-OCT-84
CHK'D: R. McNamara	DATE 3-OCT-84	SHEET 1 OF 1	
		NEXT HIGHER ASSEMBLY:	

TITLE: KA630 QBUS INTERFACE

SIZE	CODE	NUMBER	REV
D	CS	M7505-0-29	B

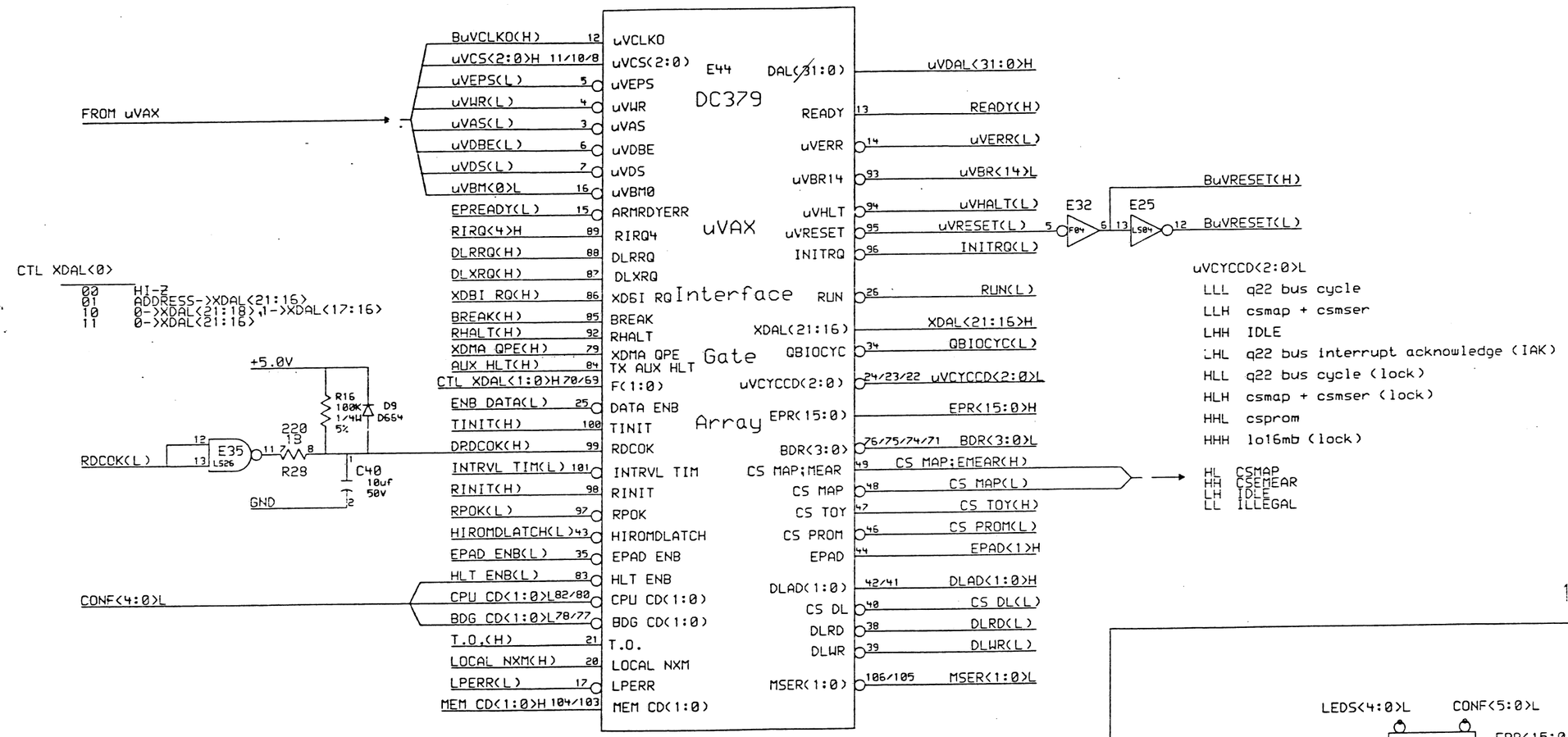

"THIS DRAWING AND SPECIFICATIONS, HEREIN, ARE THE PROPERTY OF DIGITAL EQUIPMENT CORPORATION AND SHALL NOT BE REPRODUCED OR COPIED OR USED IN WHOLE OR IN PART AS THE BASIS FOR THE MANUFACTURE OR SALE OF ITEMS WITHOUT WRITTEN PERMISSION.

COPYRIGHT 1984 DIGITAL EQUIPMENT CORPORATION

REVISION HISTORY		
REV	ECO NUMBER	DATE
B	M7505M001	29-OCT-84

DRAWING
TITLE=GATOR1
ABBREV=GATOR1
CIRCUIT←TYPE=GATE←ARRAY
LAST←MODIFIED=Mon Oct 29 09:35:21 1984

DEFINE
X←FIRST=0
X←STEP=SIZE

digital

DRN: BARRY MASKAS	DATE 3-OCT-84	ENG: BARRY MASKAS	DATE 3-OCT-84
CHK'D: BARRY MASKAS	DATE 3-OCT-84	SHEET 1 OF 1	
		NEXT HIGHER ASSEMBLY:	

TITLE: uVAX Interface Gate Array

SIZE	CODE	NUMBER	REV
D	CS	M7505 -2 -29	B

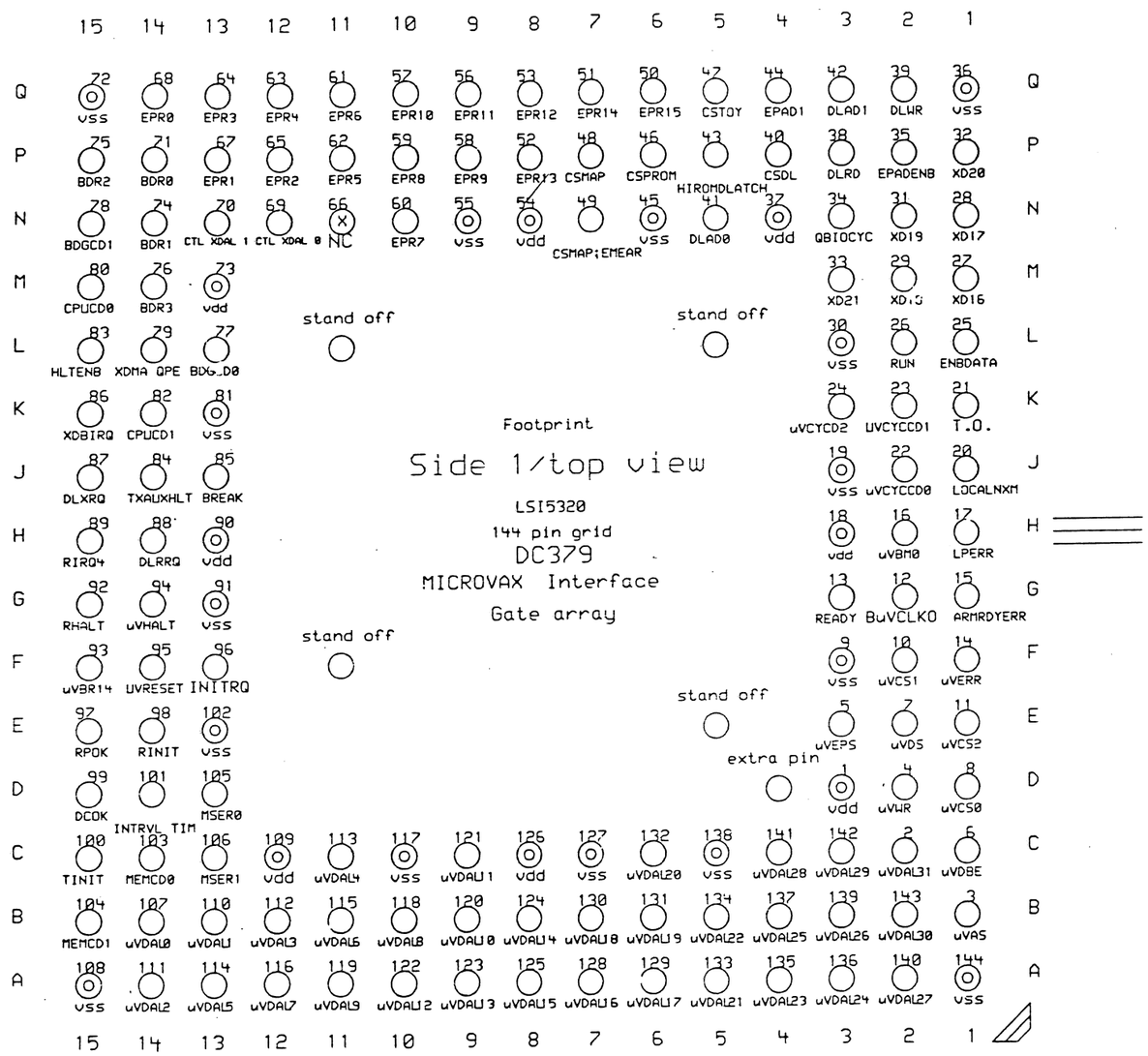

"THIS DRAWING AND SPECIFICATIONS, HEREIN, ARE THE PROPERTY OF DIGITAL EQUIPMENT CORPORATION AND SHALL NOT BE REPRODUCED OR COPIED OR USED IN WHOLE OR IN PART AS THE BASIS FOR THE MANUFACTURE OR SALE OF ITEMS WITHOUT WRITTEN PERMISSION.
COPYRIGHT 1984 DIGITAL EQUIPMENT CORPORATION

REVISION HISTORY		
REV	ECO NUMBER	DATE
B	M7606-0 [illegible]	[illegible]

DRAWING
TITLE=galpads

DEFINE
X←FIRST=0
X←STEP=SIZE

LAST←MODIFIED=Mon Oct 29 11:47:47 1984

digital

DRN: BARRY MASKAS	DATE	ENG: BARRY MASKAS	DATE 15-DEC-83
CHK'D: BARRY MASKAS	DATE	SHEET 1 OF 1	
		NEXT HIGHER ASSEMBLY:	

TITLE: DC379 PAD ASSIGNMENT TOP VIEW LL5320 IN 144 PIN GRID ARRAY

SIZE	CODE	NUMBER	REV.
D	CS	M7606 -0 -30	B

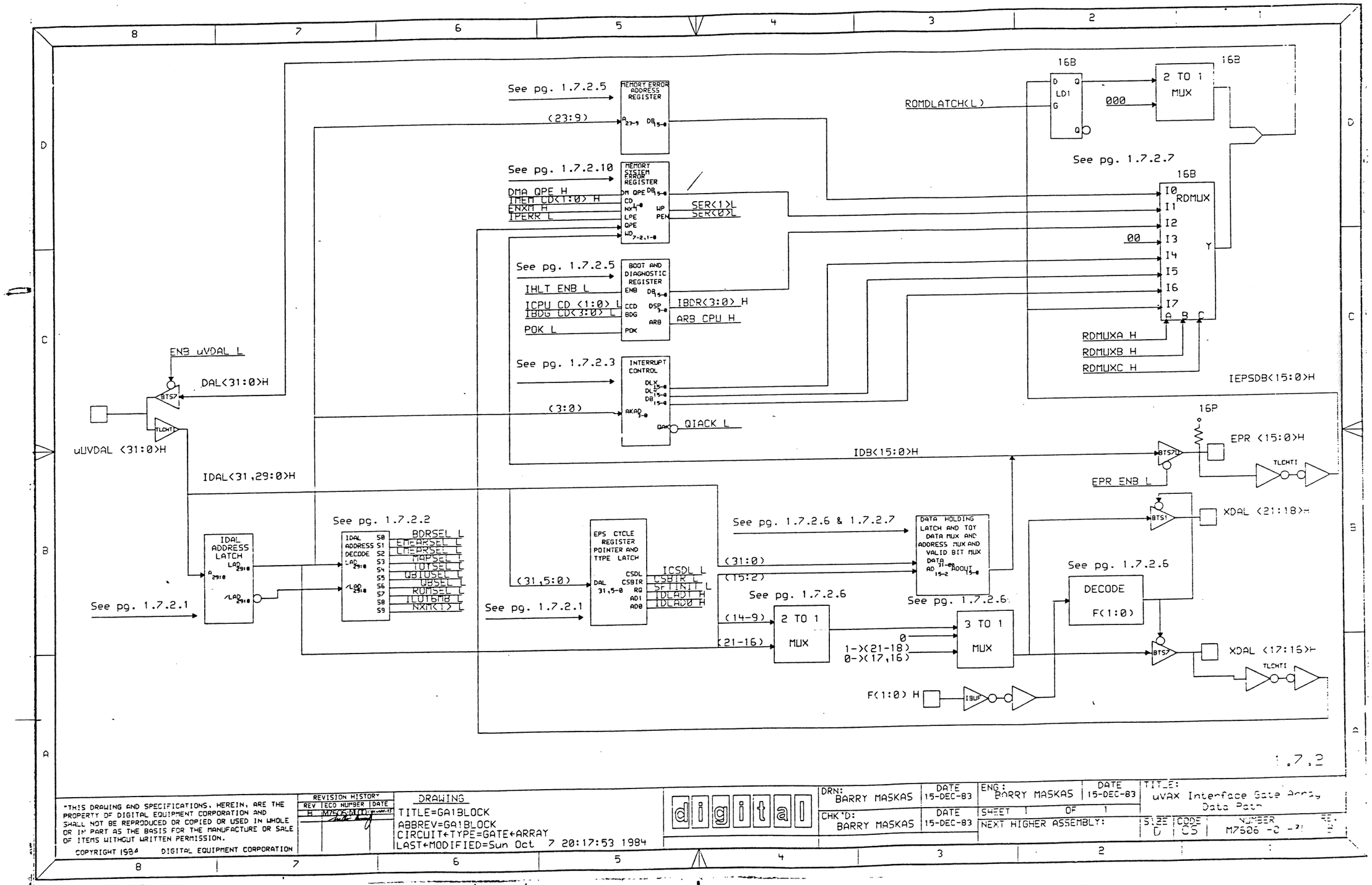

"THIS DRAWING AND SPECIFICATIONS, HEREIN, ARE THE PROPERTY OF DIGITAL EQUIPMENT CORPORATION AND SHALL NOT BE REPRODUCED OR COPIED OR USED IN WHOLE OR IN PART AS THE BASIS FOR THE MANUFACTURE OR SALE OF ITEMS WITHOUT WRITTEN PERMISSION.

COPYRIGHT 1984 DIGITAL EQUIPMENT CORPORATION

REVISION HISTORY		
REV	ECO NUMBER	DATE
H	M7506	

DRAWING
TITLE=GA1BLOCK
ABBREV=GA1BLOCK
CIRCUIT+TYPE=GATE+ARRAY
LAST+MODIFIED=Sun Oct 7 20:17:53 1984

digital

DRN: BARRY MASKAS	DATE 15-DEC-83	ENG: BARRY MASKAS	DATE 15-DEC-83
CHK'D: BARRY MASKAS	DATE 15-DEC-83	SHEET 1 OF 1	
		NEXT HIGHER ASSEMBLY:	

TITLE: uVAX Interface Gate Array Data Path

SIZE	CODE	NUMBER	REV
D	CS	M7506 -0 -71	

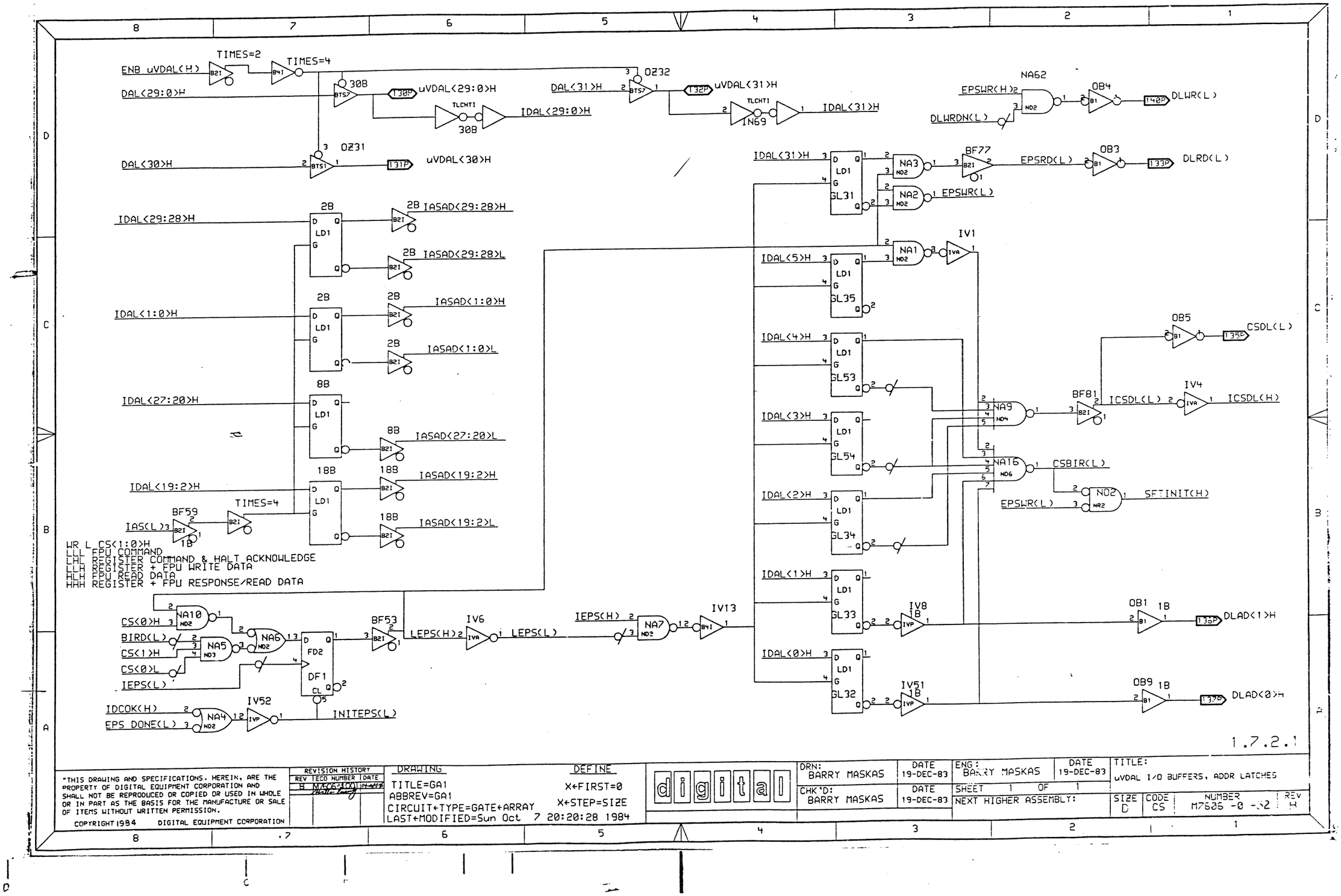

"THIS DRAWING AND SPECIFICATIONS, HEREIN, ARE THE PROPERTY OF DIGITAL EQUIPMENT CORPORATION AND SHALL NOT BE REPRODUCED OR COPIED OR USED IN WHOLE OR IN PART AS THE BASIS FOR THE MANUFACTURE OR SALE OF ITEMS WITHOUT WRITTEN PERMISSION.
COPYRIGHT 1984 DIGITAL EQUIPMENT CORPORATION

REVISION HISTORY		
REV	ECO NUMBER	DATE
B	M7526-100	19-NOV-83

DRAWING
TITLE=GA1
ABBREV=GA1
CIRCUIT←TYPE=GATE←ARRAY
LAST←MODIFIED=Sun Oct 7 20:20:28 1984

DEFINE
X←FIRST=0
X←STEP=SIZE

digital

DRN: BARRY MASKAS	DATE 19-DEC-83	ENG: BARRY MASKAS	DATE 19-DEC-83	TITLE: uVDAL I/O BUFFERS, ADDR LATCHES
CHK'D: BARRY MASKAS	DATE 19-DEC-83	SHEET 1 OF 1		
		NEXT HIGHER ASSEMBLY:		SIZE D · CODE CS · NUMBER M7526-0-32 · REV H

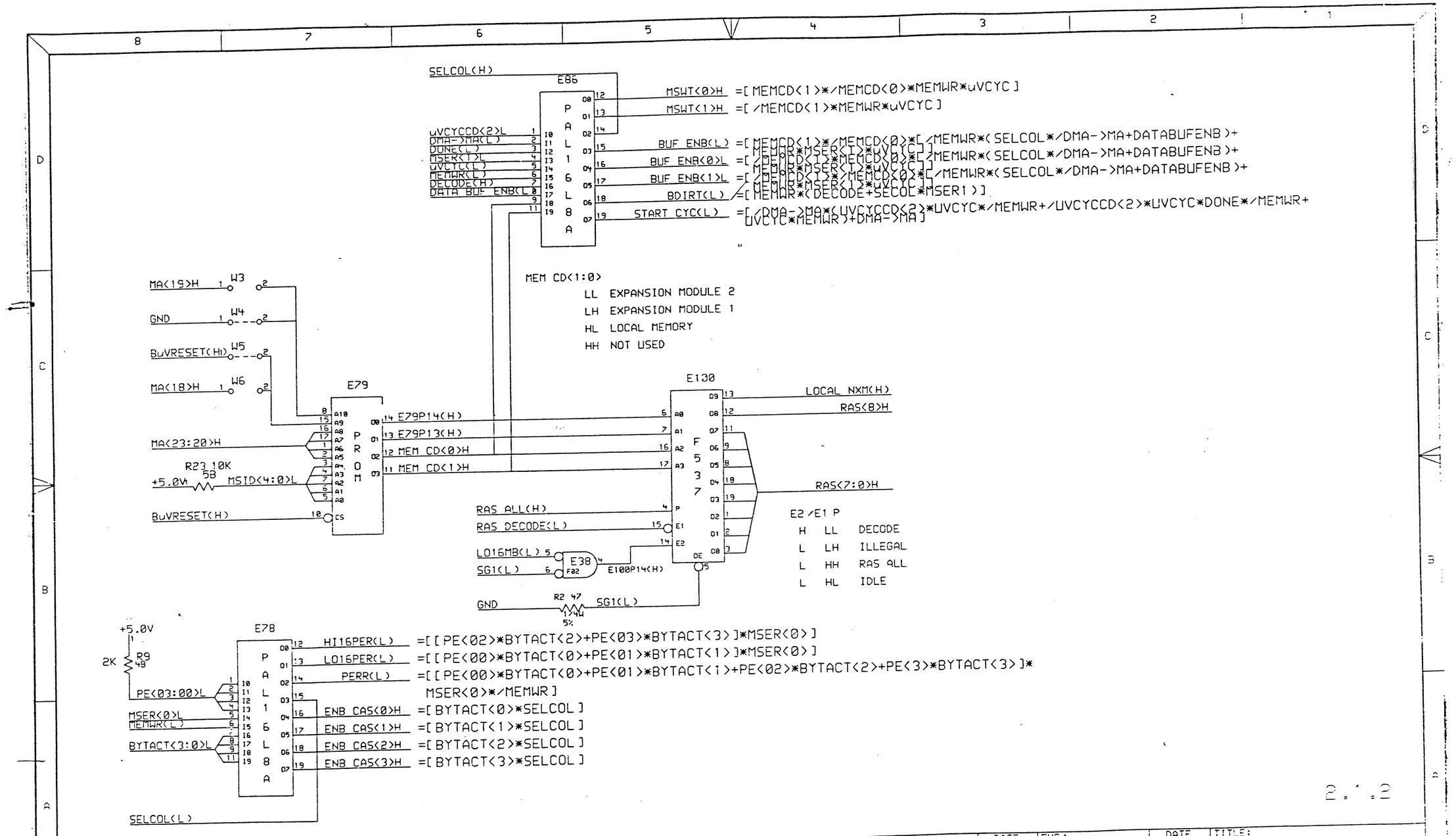

"THIS DRAWING AND SPECIFICATIONS, HEREIN, ARE THE PROPERTY OF DIGITAL EQUIPMENT CORPORATION AND SHALL NOT BE REPRODUCED OR COPIED OR USED IN WHOLE OR IN PART AS THE BASIS FOR THE MANUFACTURE OR SALE OF ITEMS WITHOUT WRITTEN PERMISSION.
COPYRIGHT 1984 DIGITAL EQUIPMENT CORPORATION

REVISION HISTORY		
REV	ECO NUMBER	DATE
B	M7505 MOD	[illegible]

DRAWING
TITLE=MEM CTRLR
ABBREV=MEM+CTRLR
CIRCUIT+TYPE=MEM+DECODE
LAST+MODIFIED=Fri Oct 12 14:19:03 1984

DEFINE
X+FIRST=0
X+STEP=SIZE

digital

DRN: BARRY MASKAS	DATE 3-OCT-84	ENG: BARRY MASKAS	DATE 3-OCT-84
CHK'D: BARRY MASKAS	DATE 3-OCT-84	SHEET 1 OF 1	
		NEXT HIGHER ASSEMBLY:	

TITLE: MEMORY SEQUENCER SUPPORT

SIZE	CODE	NUMBER	REV
D	CS	M7505 -0 -29.	B

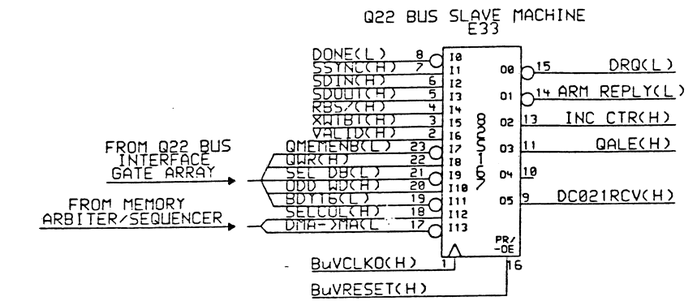

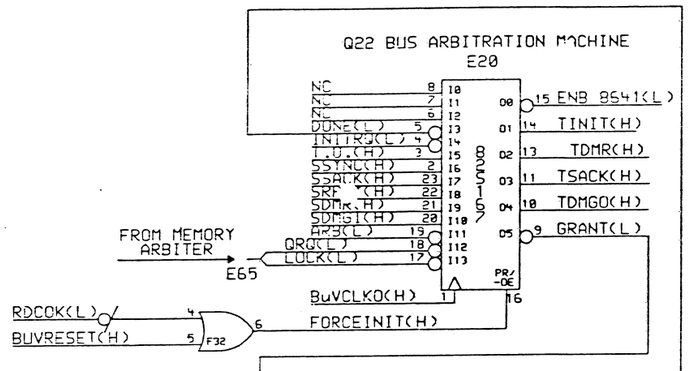

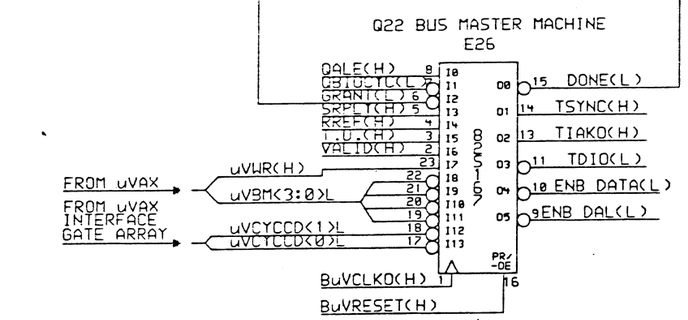

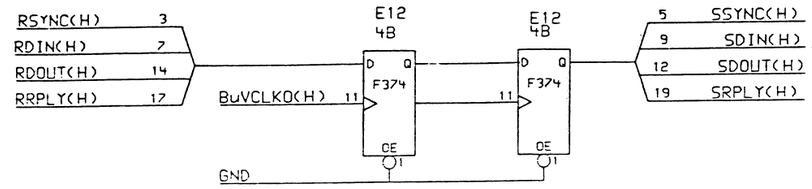

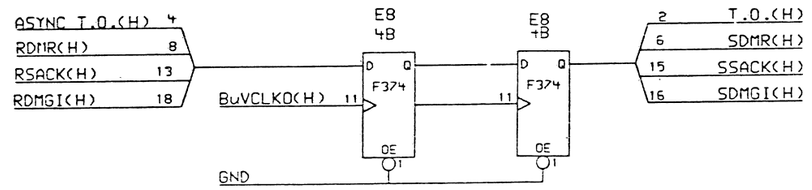

2.2

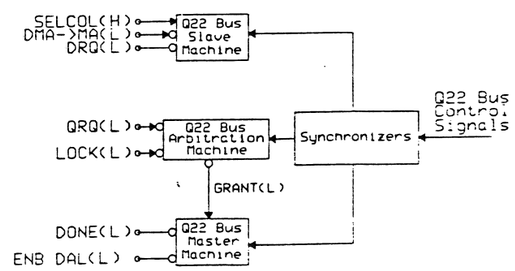

"THIS DRAWING AND SPECIFICATIONS, HEREIN, ARE THE PROPERTY OF DIGITAL EQUIPMENT CORPORATION AND SHALL NOT BE REPRODUCED OR COPIED OR USED IN WHOLE OR IN PART AS THE BASIS FOR THE MANUFACTURE OR SALE OF ITEMS WITHOUT WRITTEN PERMISSION.
COPYRIGHT 1984 DIGITAL EQUIPMENT CORPORATION

REVISION HISTORY		
REV	ECO NUMBER	DATE
A	[illegible]	[illegible]

DRAWING
TITLE=QBUS MACHINE
ABBREV=QCTRL
CIRCUIT←TYPE=QBUS←CNTRL
LAST←MODIFIED=Fri Oct 12 12:21:22 1984

DEFINE
X←FIRST=0
X←STEP=SIZE

digital

DRN: R. McNamara	DATE 3-OCT-84	ENG: R. McNamara	DATE 3-OCT-84
CHK'D: R. McNamara	DATE 3-OCT-84	SHEET 1 OF 1	
		NEXT HIGHER ASSEMBLY:	

TITLE: Q22 BUS STATE MACHINES

SIZE	CODE	NUMBER	REV
D	CS	M7505 -0 -50	B

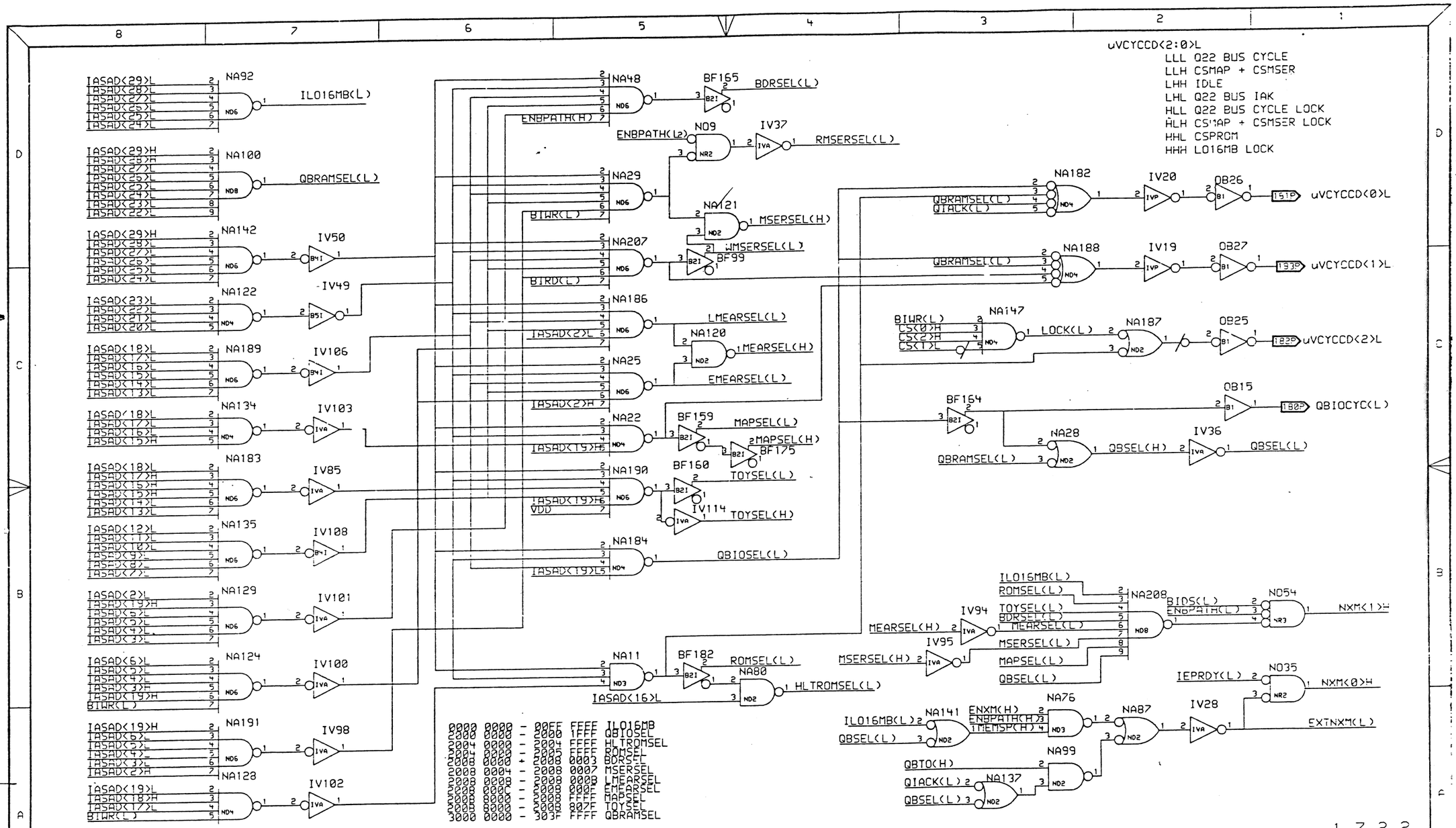

"THIS DRAWING AND SPECIFICATIONS, HEREIN, ARE THE PROPERTY OF DIGITAL EQUIPMENT CORPORATION AND SHALL NOT BE REPRODUCED OR COPIED OR USED IN WHOLE OR IN PART AS THE BASIS FOR THE MANUFACTURE OR SALE OF ITEMS WITHOUT WRITTEN PERMISSION.
COPYRIGHT 1984 DIGITAL EQUIPMENT CORPORATION

REVISION HISTORY		
REV	ECO NUMBER	DATE
B	M7607-M0017	

DRAWING
TITLE=GA1
ABBREV=GA1
CIRCUIT←TYPE=GATE←ARRAY
LAST←MODIFIED=Sun Oct 7 16:34:28 1984

digital

DRN: BARRY MASKAS	DATE 19-DEC-83	ENG: BARRY MASKAS	DATE 19-DEC-83	TITLE: ADDRESS DECODER
CHK'D: BARRY MASKAS	DATE 19-DEC-83	SHEET 1 OF 1		
		NEXT HIGHER ASSEMBLY:		SIZE D · CODE CS · NUMBER M7607-0-73 · REV E

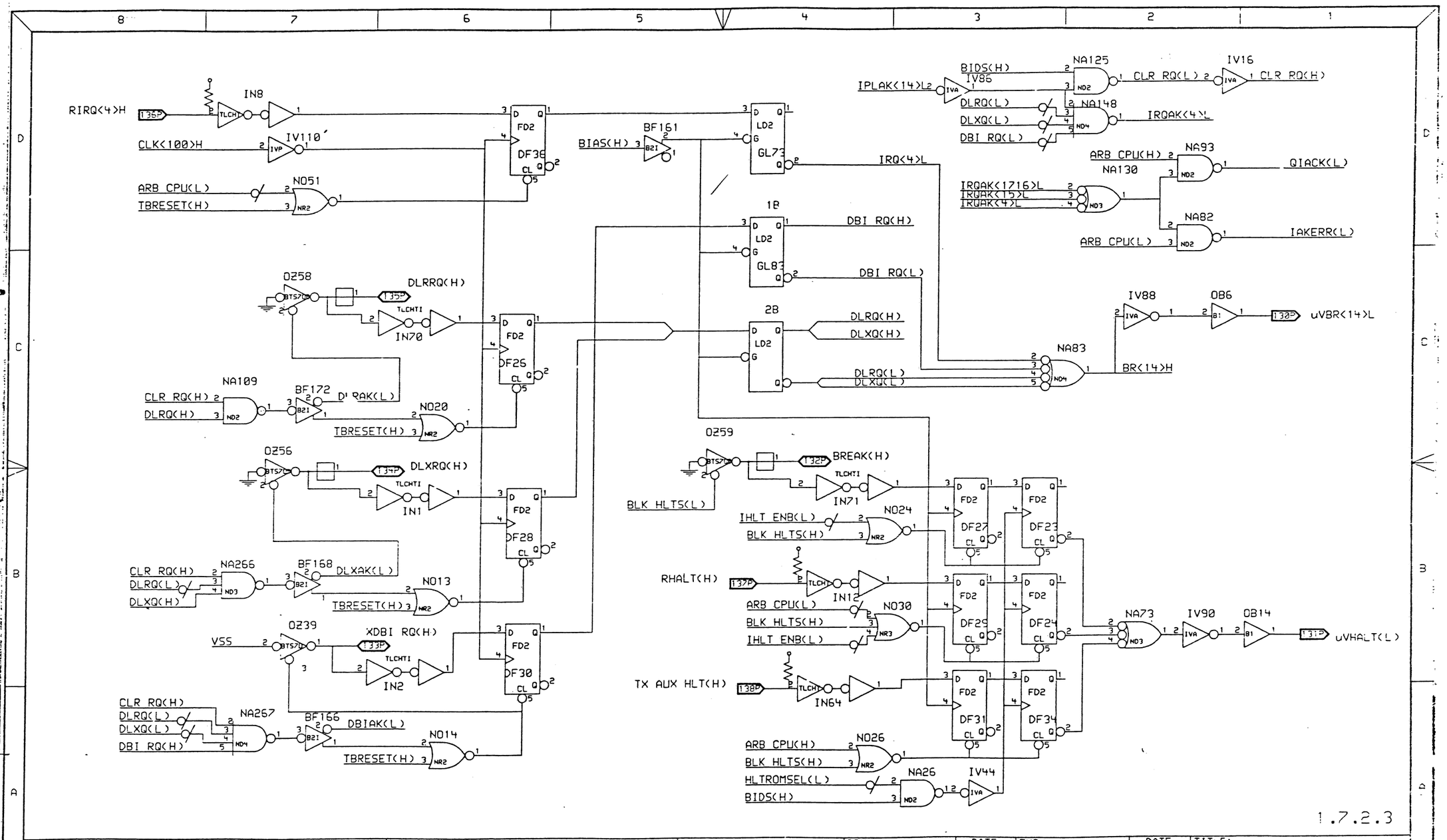

"THIS DRAWING AND SPECIFICATIONS, HEREIN, ARE THE PROPERTY OF DIGITAL EQUIPMENT CORPORATION AND SHALL NOT BE REPRODUCED OR COPIED OR USED IN WHOLE OR IN PART AS THE BASIS FOR THE MANUFACTURE OR SALE OF ITEMS WITHOUT WRITTEN PERMISSION.
COPYRIGHT 1984 DIGITAL EQUIPMENT CORPORATION

REVISION HISTORY		
REV	ECO NUMBER	DATE
B	M7106-A001	18-NOV-83

DRAWING
TITLE=GA1
ABBREV=GA1
CIRCUIT←TYPE=GATE←ARRAY
LAST←MODIFIED=Sun Oct 7 16:40:03 1984

digital

DRN:	DATE	ENG:	DATE	TITLE:
BARRY MASKAS	18-DEC-83	BARRY MASKAS	18-DEC-83	EXCEPTIONS AND INTERRUPTS
CHK'D: BARRY MASKAS	DATE 18-DEC-83	SHEET 1 OF 1		
		NEXT HIGHER ASSEMBLY:		

SIZE	CODE	NUMBER	REV
D	CS	M7506 -0 -34	2

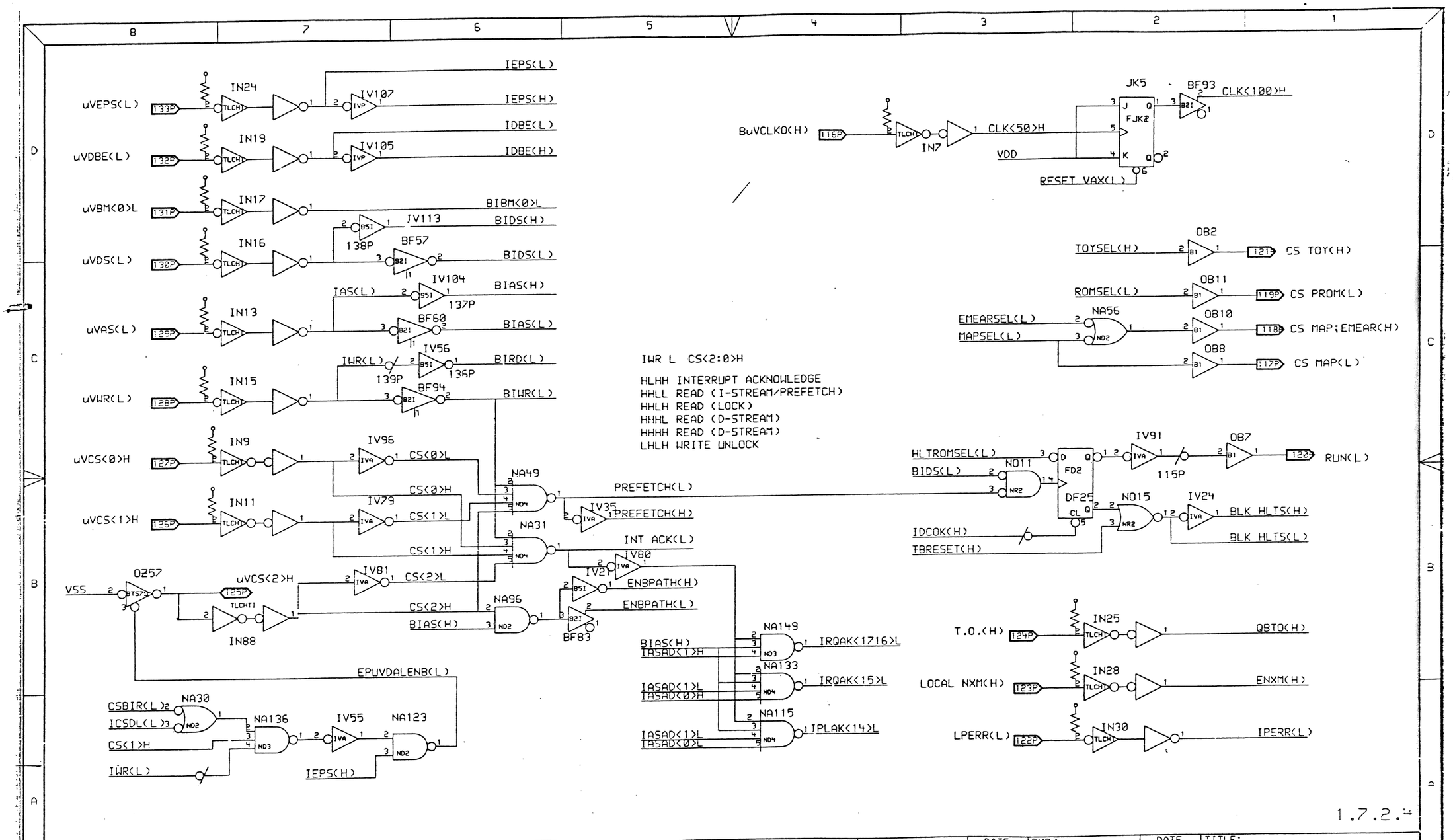

1.7.2.4

"THIS DRAWING AND SPECIFICATIONS, HEREIN, ARE THE PROPERTY OF DIGITAL EQUIPMENT CORPORATION AND SHALL NOT BE REPRODUCED OR COPIED OR USED IN WHOLE OR IN PART AS THE BASIS FOR THE MANUFACTURE OR SALE OF ITEMS WITHOUT WRITTEN PERMISSION.

COPYRIGHT 1984 DIGITAL EQUIPMENT CORPORATION

REVISION HISTORY		
REV	ECO NUMBER	DATE
A	107606-0001	07-MAR-84

DRAWING
TITLE=GA1
ABBREV=GA1
CIRCUIT←TYPE=GATE←ARRAY
LAST←MODIFIED=Sat Oct 20 18:44:09 1984

digital

DRN: BARRY MASKAS	DATE 19-DEC-83	ENG: BARRY MASKAS	DATE 19-DEC-83	TITLE: uVAX INPUTS AND I/O PINS	
CHK'D: BARRY MASKAS	DATE 19-DEC-83	SHEET 1 OF 1			
		NEXT HIGHER ASSEMBLY:		SIZE D	CODE CS	NUMBER M7606 -0 -35	REV E

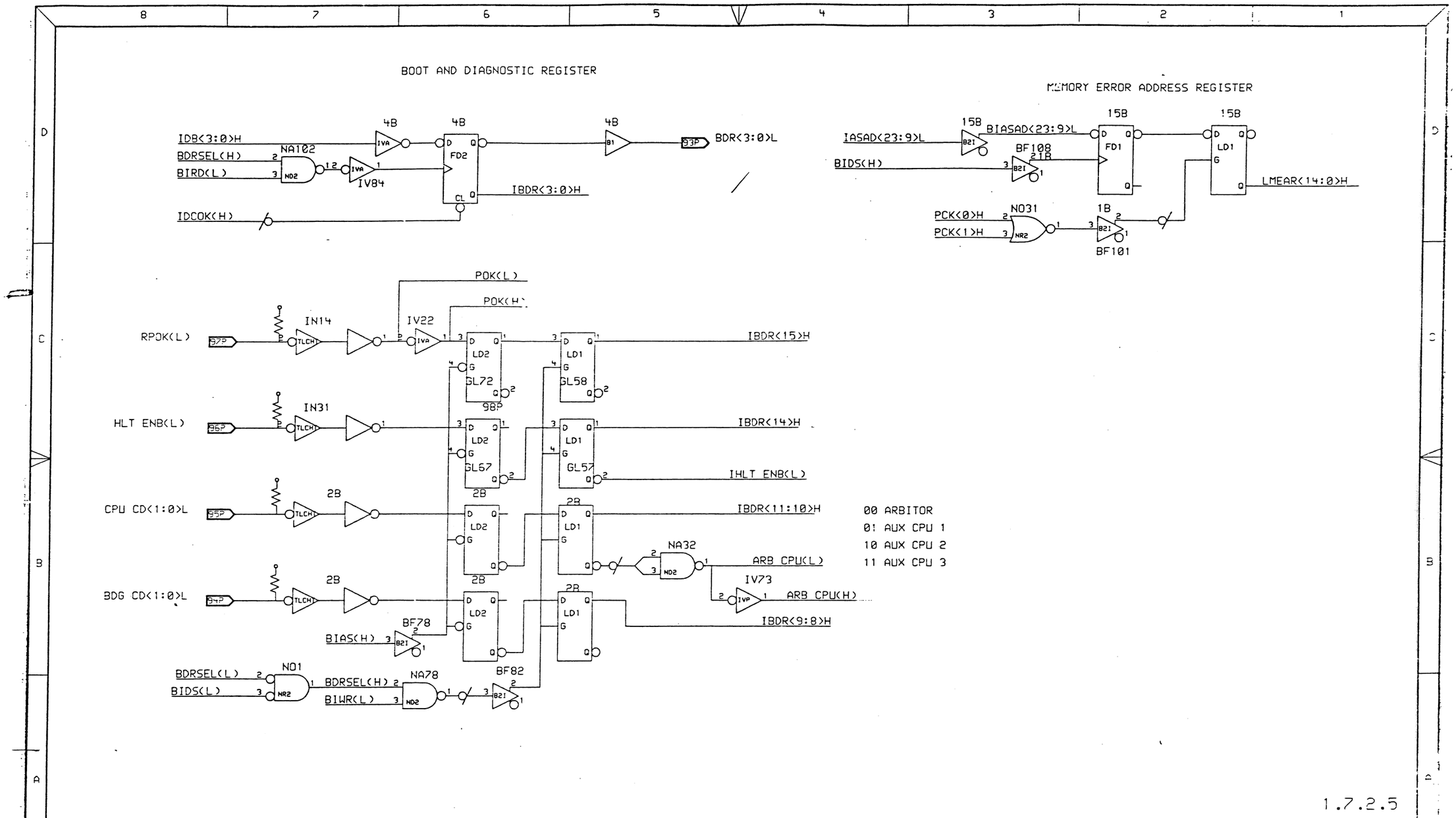

"THIS DRAWING AND SPECIFICATIONS, HEREIN, ARE THE PROPERTY OF DIGITAL EQUIPMENT CORPORATION AND SHALL NOT BE REPRODUCED OR COPIED OR USED IN WHOLE OR IN PART AS THE BASIS FOR THE MANUFACTURE OR SALE OF ITEMS WITHOUT WRITTEN PERMISSION.
COPYRIGHT 1984 DIGITAL EQUIPMENT CORPORATION

REVISION HISTORY		
REV	ECO NUMBER	DATE
A	M7606-M1001	17-MAY-85

DRAWING
TITLE=GA1
ABBREV=GA1
CIRCUIT←TYPE=GATE←ARRAY
LAST←MODIFIED=Sun Oct 7 16:53:31 1984

digital

DRN: BARRY MASKAS	DATE 18-DEC-83	ENG: BARRY MASKAS	DATE 18-DEC-83
CHK'D: BARRY MASKAS	DATE 18-DEC-83	SHEET 1 OF 1	
		NEXT HIGHER ASSEMBLY:	

TITLE: BOOT/DIAG REG., MEM ERR ADDR REG.

SIZE	CODE	NUMBER	REV
D	CS	M7606 -0 -36	A

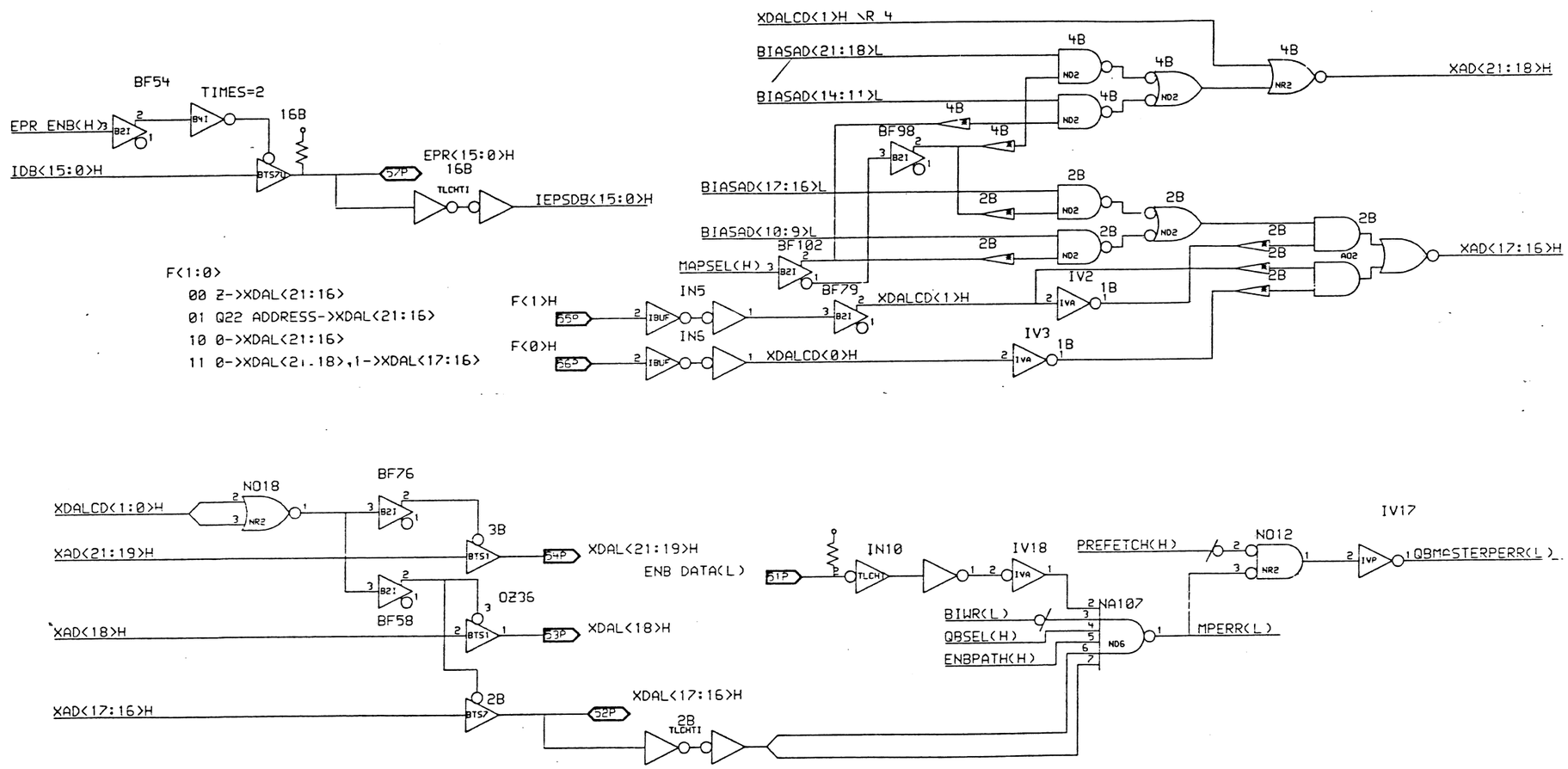

1.7.2.6

"THIS DRAWING AND SPECIFICATIONS, HEREIN, ARE THE PROPERTY OF DIGITAL EQUIPMENT CORPORATION AND SHALL NOT BE REPRODUCED OR COPIED OR USED IN WHOLE OR IN PART AS THE BASIS FOR THE MANUFACTURE OR SALE OF ITEMS WITHOUT WRITTEN PERMISSION.
COPYRIGHT 1984 DIGITAL EQUIPMENT CORPORATION

REVISION HISTORY		
REV	ECO NUMBER	DATE
A	197606-0020	01-MAY-84

DRAWING
TITLE=GA1
ABBREV=GA1
CIRCUIT←TYPE=GATE←ARRAY
LAST←MODIFIED=NOT WRITTEN

digital

DRN: BARRY MASKAS	DATE 19-DEC-83	ENG: BARRY MASKAS	DATE 19-DEC-83	TITLE: EPR BUS, XDAL BUS
CHK'D: BARRY MASKAS	DATE 19-DEC-83	SHEET 1 OF 1		
		NEXT HIGHER ASSEMBLY:		SIZE D · CODE CS · NUMBER M7506-0-77 · REV E

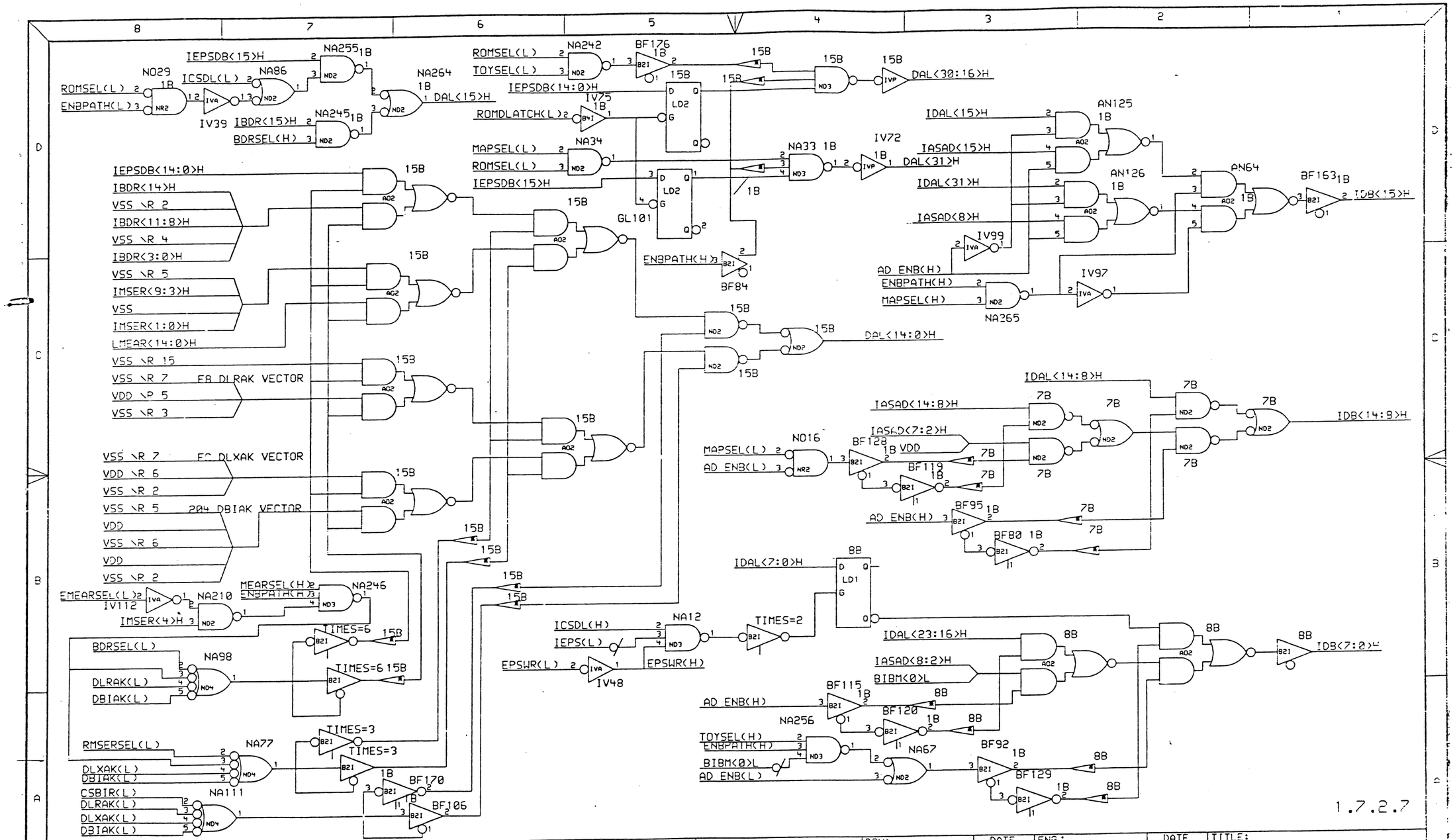

"THIS DRAWING AND SPECIFICATIONS, HEREIN, ARE THE PROPERTY OF DIGITAL EQUIPMENT CORPORATION AND SHALL NOT BE REPRODUCED OR COPIED OR USED IN WHOLE OR IN PART AS THE BASIS FOR THE MANUFACTURE OR SALE OF ITEMS WITHOUT WRITTEN PERMISSION.

COPYRIGHT 1984 DIGITAL EQUIPMENT CORPORATION

REVISION HISTORY		
REV	ECO NUMBER	DATE
B	M7605-21001	[illegible]

DRAWING
TITLE=GA1
ABBREV=GA1
CIRCUIT+TYPE=GATE+ARRAY
LAST+MODIFIED=Sun Oct 7 17:11:37 1984

digital

DRN: BARRY MASKAS	DATE 19-DEC-83	ENG: BARRY MASKAS	DATE 19-DEC-83
CHK'D: BARRY MASKAS	DATE 19-DEC-83	SHEET 1 OF 1	
		NEXT HIGHER ASSEMBLY:	

TITLE: INTERNAL DATA BUSES

SIZE	CODE	NUMBER	REV
D	CS	M7605 -0 -38	B

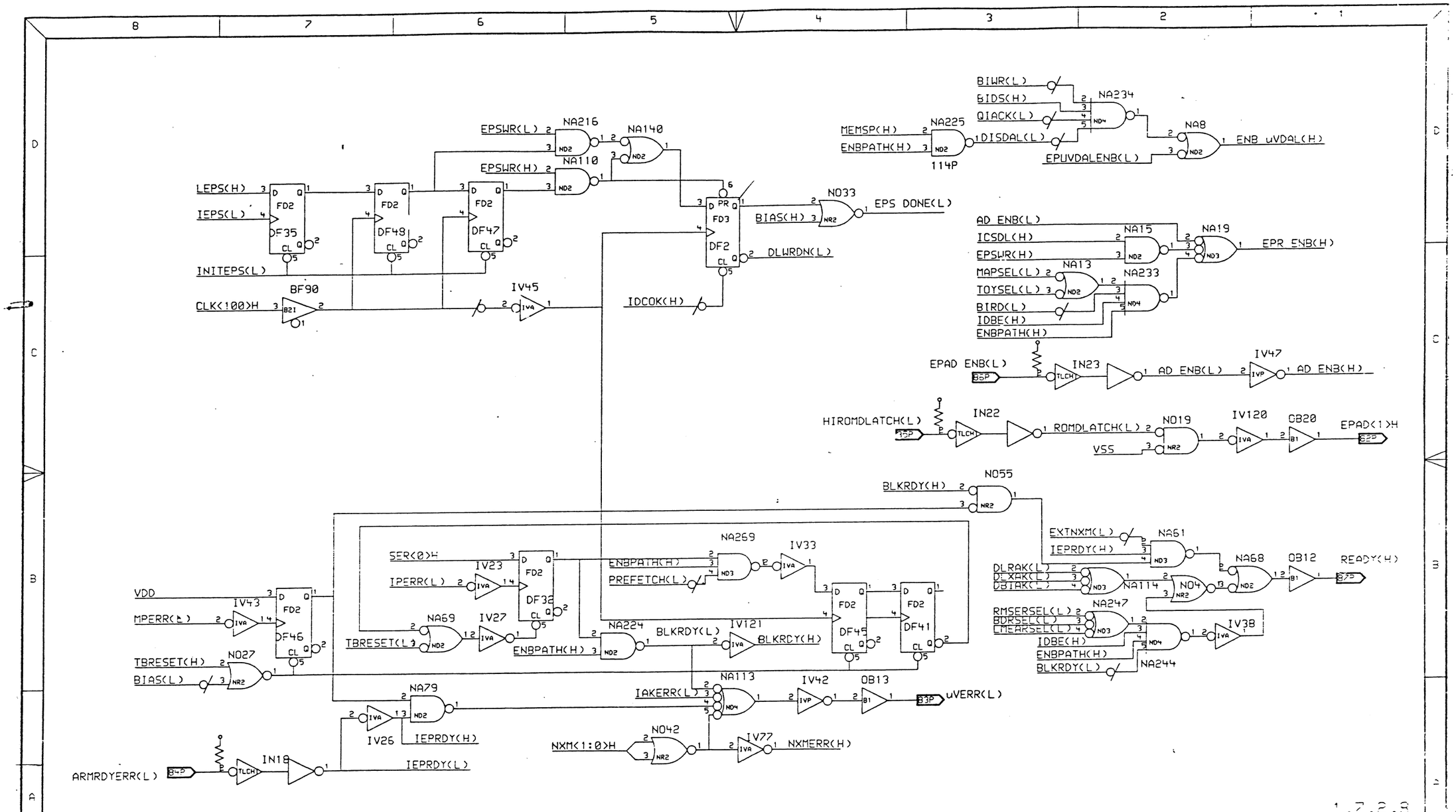

1.7.2.8

"THIS DRAWING AND SPECIFICATIONS, HEREIN, ARE THE PROPERTY OF DIGITAL EQUIPMENT CORPORATION AND SHALL NOT BE REPRODUCED OR COPIED OR USED IN WHOLE OR IN PART AS THE BASIS FOR THE MANUFACTURE OR SALE OF ITEMS WITHOUT WRITTEN PERMISSION.

COPYRIGHT 1984 DIGITAL EQUIPMENT CORPORATION

REVISION HISTORY		
REV	ECO NUMBER	DATE
B	[illegible]	[illegible]

DRAWING
TITLE=GA1
ABBREV=GA1
CIRCUIT←TYPE=GATE←ARRAY
LAST←MODIFIED=Sun Oct 7 17:15:18 1984

digital

DRN: BARRY MASKAS	DATE 19-DEC-83	ENG: BARRY MASKAS	DATE 19-DEC-83	TITLE: MISC. CONTROL STROBES	
CHK'D: BARRY MASKAS	DATE 19-DEC-83	SHEET 1 OF 1			
		NEXT HIGHER ASSEMBLY:		SIZE D	CODE CS	NUMBER M7525 -0 -39	REV. B

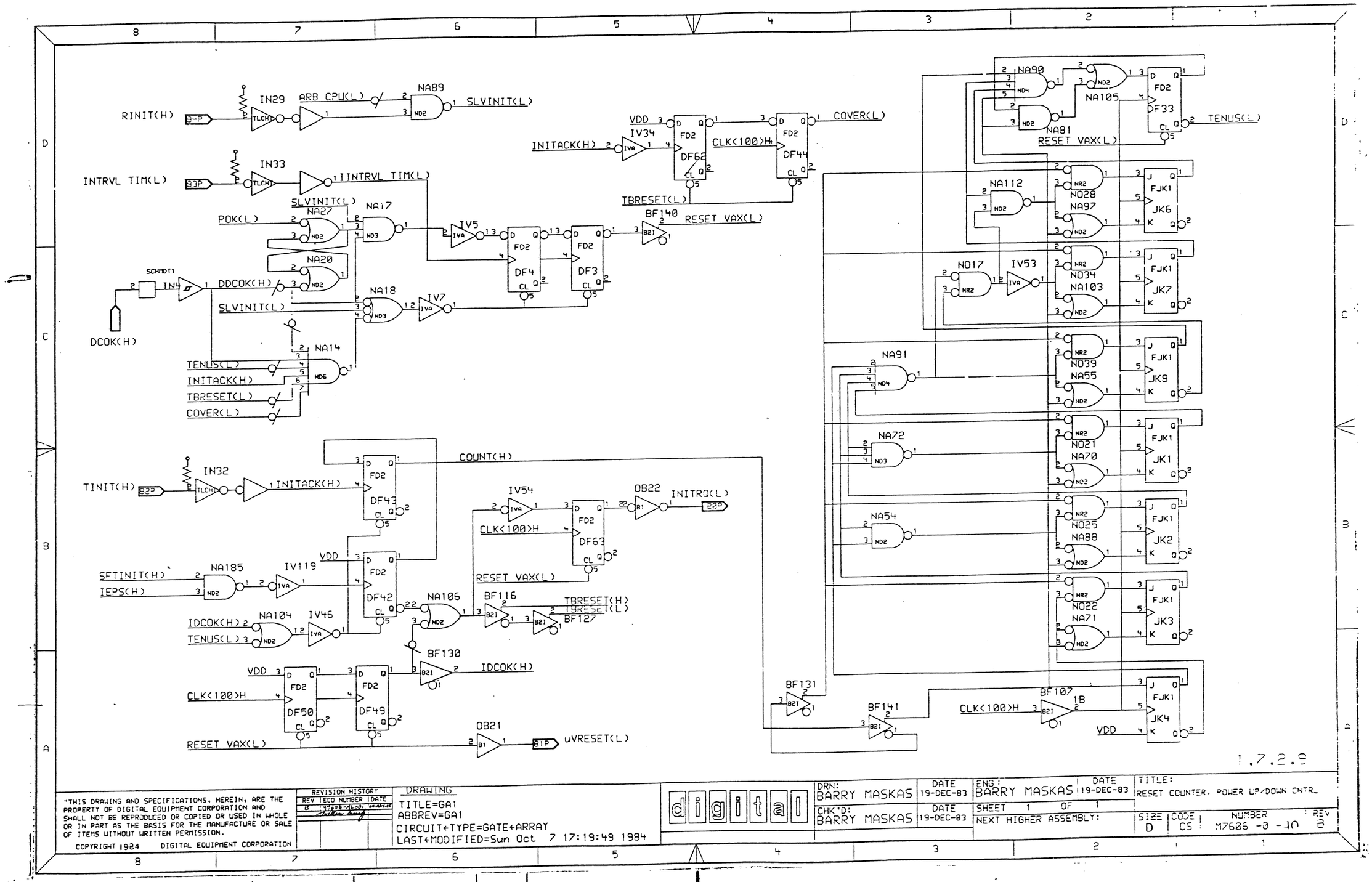

"THIS DRAWING AND SPECIFICATIONS, HEREIN, ARE THE PROPERTY OF DIGITAL EQUIPMENT CORPORATION AND SHALL NOT BE REPRODUCED OR COPIED OR USED IN WHOLE OR IN PART AS THE BASIS FOR THE MANUFACTURE OR SALE OF ITEMS WITHOUT WRITTEN PERMISSION.

COPYRIGHT 1984 DIGITAL EQUIPMENT CORPORATION

REVISION HISTORY		
REV	ECO NUMBER	DATE
B	[illegible]	[illegible]

DRAWING
TITLE=GA1
ABBREV=GA1
CIRCUIT←TYPE=GATE←ARRAY
LAST←MODIFIED=Sun Oct 7 17:19:49 1984

digital

DRN: BARRY MASKAS	DATE 19-DEC-83	ENG: BARRY MASKAS	DATE 19-DEC-83	TITLE: RESET COUNTER, POWER UP/DOWN CNTR.
CHK'D: BARRY MASKAS	DATE 19-DEC-83	SHEET 1 OF 1		
		NEXT HIGHER ASSEMBLY:		SIZE D · CODE CS · NUMBER M7606 -0 -10 · REV B

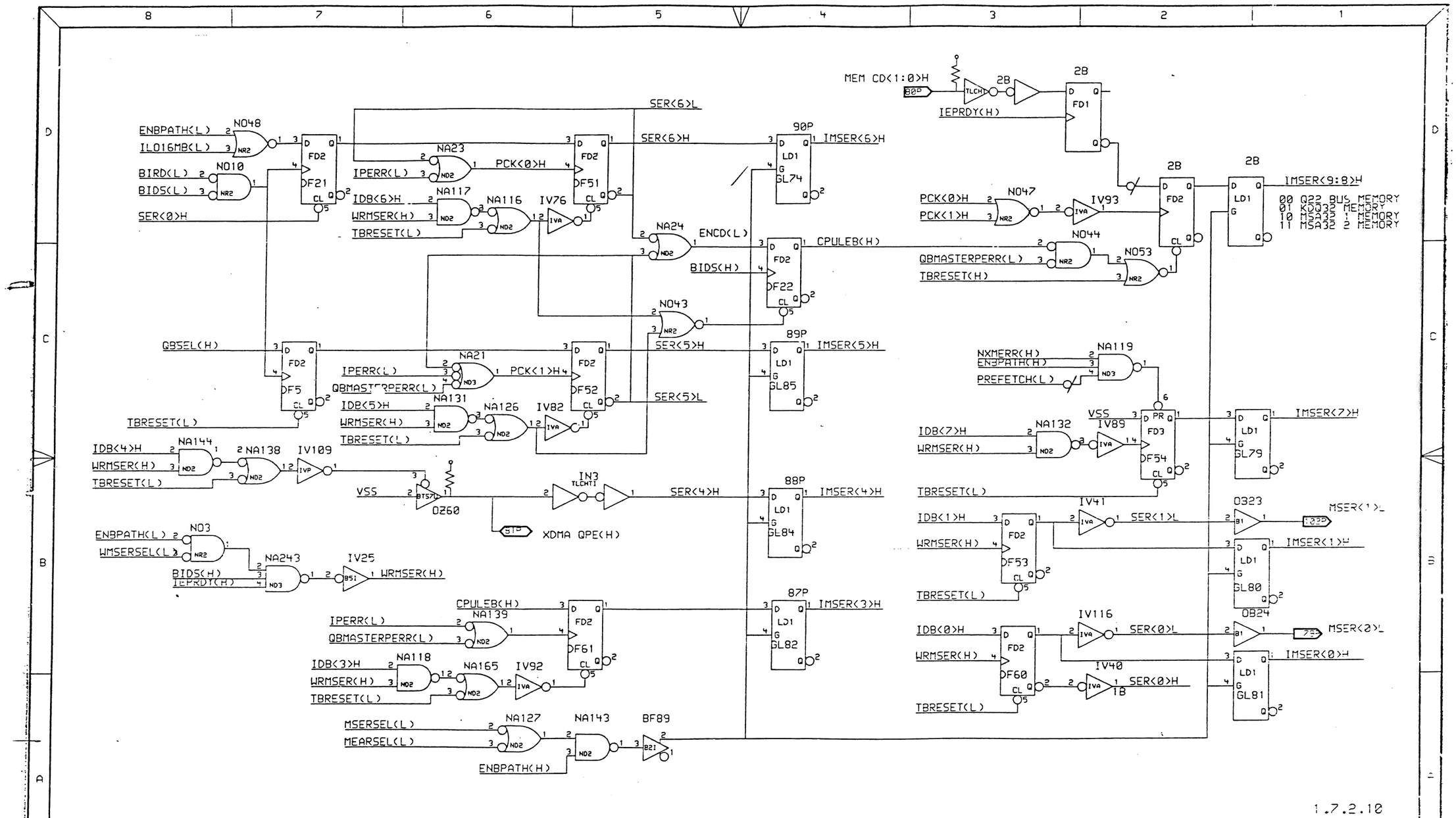

*THIS DRAWING AND SPECIFICATIONS, HEREIN, ARE THE PROPERTY OF DIGITAL EQUIPMENT CORPORATION AND SHALL NOT BE REPRODUCED OR COPIED OR USED IN WHOLE OR IN PART AS THE BASIS FOR THE MANUFACTURE OR SALE OF ITEMS WITHOUT WRITTEN PERMISSION.
COPYRIGHT 1984 DIGITAL EQUIPMENT CORPORATION

REVISION HISTORY		
REV	ECO NUMBER	DATE
D	147604-ALG01	12-APR-84

DRAWING
TITLE=GA1
ABBREV=GA1
CIRCUIT←TYPE=GATE←ARRAY
LAST←MODIFIED=Sun Oct 7 17:24:40 1984

digital

DRN: BARRY MASKAS	DATE 19-DEC-83	ENG: BARRY MASKAS	DATE 19-DEC-83
CHK'D: BARRY MASKAS	DATE 19-DEC-83	SHEET 1 OF 1	
		NEXT HIGHER ASSEMBLY:	

TITLE: MEMORY SYSTEM ERROR REGISTER

SIZE	CODE	NUMBER	REV
D	CS	M7506 -0 -H	E

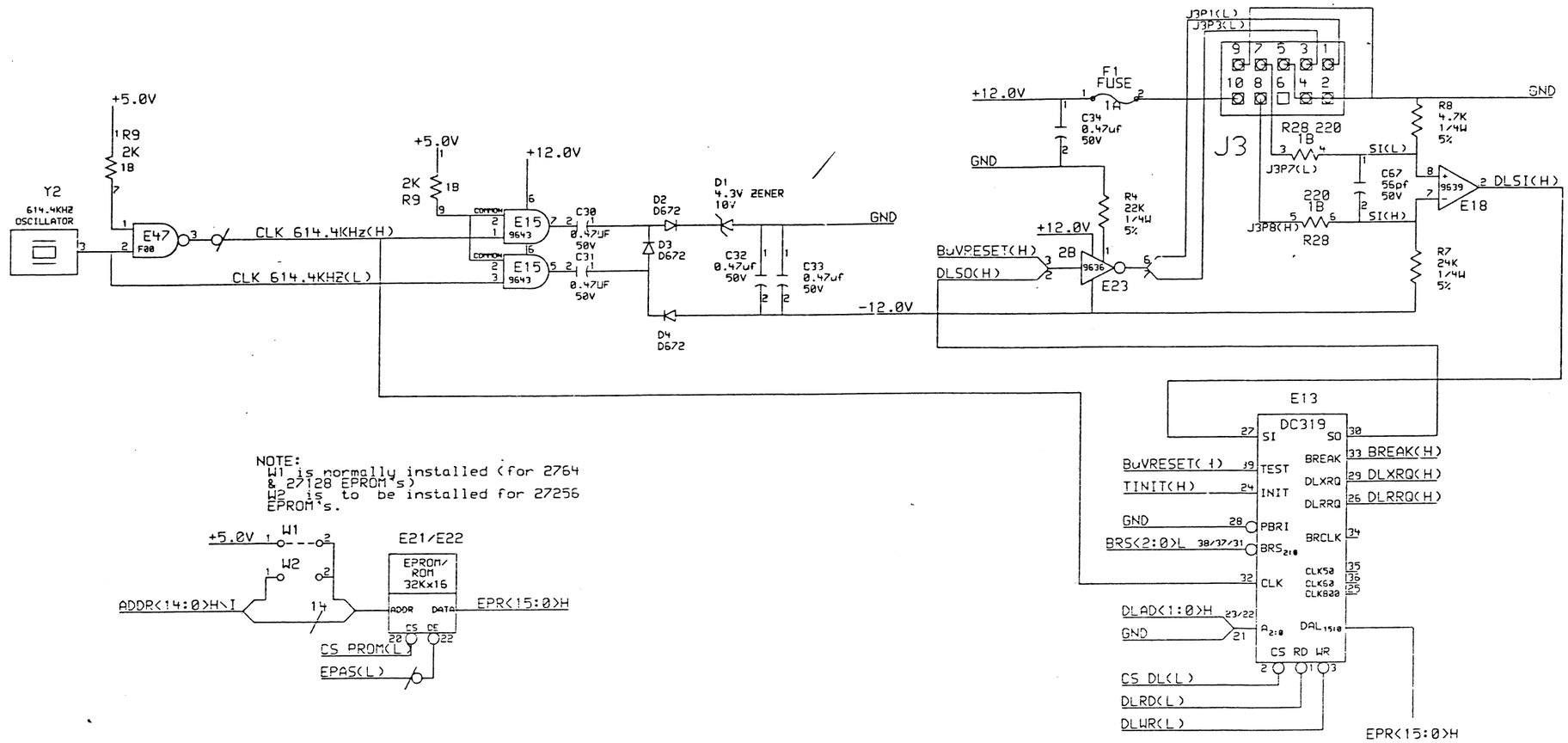

NOTE:
W1 is normally installed (for 2764 & 27128 EPROM's)
W2 is to be installed for 27256 EPROM's.

1.0

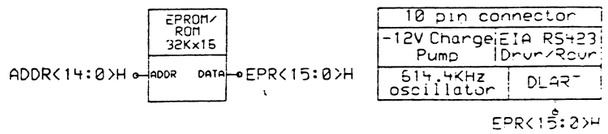

"THIS DRAWING AND SPECIFICATIONS, HEREIN, ARE THE PROPERTY OF DIGITAL EQUIPMENT CORPORATION AND SHALL NOT BE REPRODUCED OR COPIED OR USED IN WHOLE OR IN PART AS THE BASIS FOR THE MANUFACTURE OR SALE OF ITEMS WITHOUT WRITTEN PERMISSION.
COPYRIGHT 1984 DIGITAL EQUIPMENT CORPORATION

REVISION HISTORY		
REV	ECO NUMBER	DATE
Ø	M7606-ML001	12-MAY-84

DRAWING
TITLE=COMM
ABBREV=COMM
CIRCUIT←TYPE=SERIAL←I/O
LAST←MODIFIED=Fri Oct 12 14:27:55 1984

DEFINE
X←FIRST=0
X←STEP=SIZE

digital

DRN: BARRY MASKAS	DATE 3-OCT-84	ENG: BARRY MASKAS	DATE 3-OCT-84	TITLE: Console Serial Line Interface
CHK'D: BARRY MASKAS	DATE 3-OCT-84	SHEET 1 OF 1		
		NEXT HIGHER ASSEMBLY:		SIZE D · CODE CS · NUMBER M7606 -0 -43 · REV 3

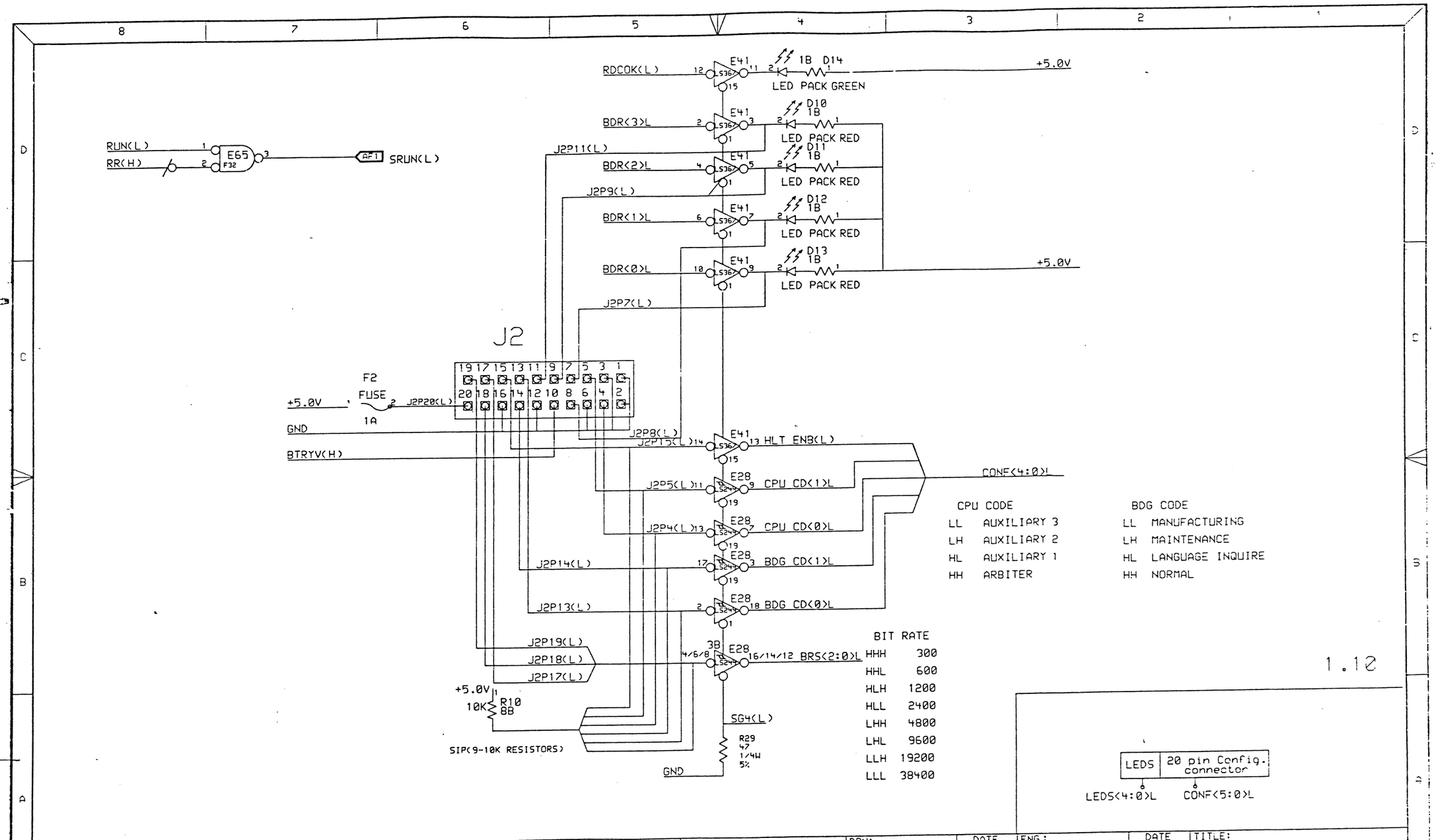

"THIS DRAWING AND SPECIFICATIONS, HEREIN, ARE THE PROPERTY OF DIGITAL EQUIPMENT CORPORATION AND SHALL NOT BE REPRODUCED OR COPIED OR USED IN WHOLE OR IN PART AS THE BASIS FOR THE MANUFACTURE OR SALE OF ITEMS WITHOUT WRITTEN PERMISSION.

COPYRIGHT 1984 DIGITAL EQUIPMENT CORPORATION

REVISION HISTORY		
REV	ECO NUMBER	DATE
B	17604-4001	09-MAY-85

DRAWING
TITLE=LEDS
ABBREV=LEDS
CIRCUIT←TYPE=CONF←CONN
LAST←MODIFIED=Mon Oct 29 09:40:54 1984

DEFINE
X←FIRST=0
X←STEP=SIZE

digital

DRN: BARRY MASKAS	DATE 3-OCT-84	ENG: BARRY MASKAS	DATE 3-OCT-84
CHK'D: BARRY MASKAS	DATE 3-OCT-84	SHEET 1 OF 1	
		NEXT HIGHER ASSEMBLY:	

TITLE: LEDS and Configuration Connector

SIZE	CODE	NUMBER	REV
D	CS	M7505 -0 -44	B

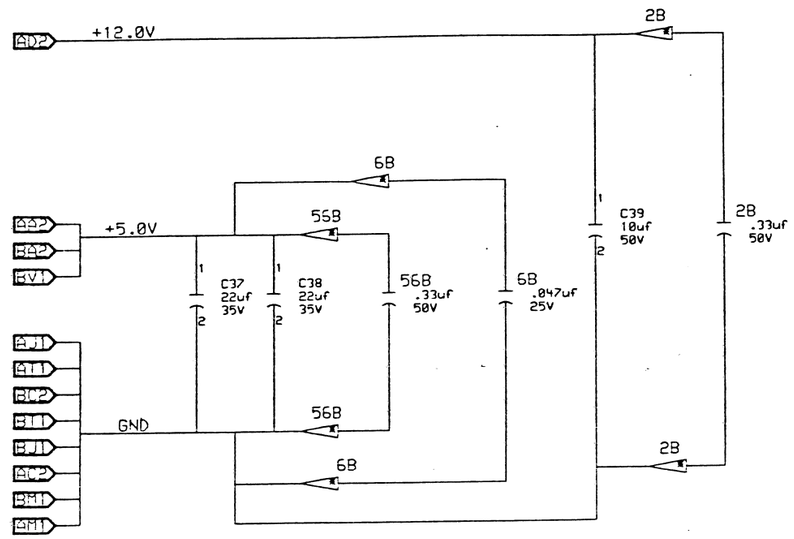

"THIS DRAWING AND SPECIFICATIONS, HEREIN, ARE THE PROPERTY OF DIGITAL EQUIPMENT CORPORATION AND SHALL NOT BE REPRODUCED OR COPIED OR USED IN WHOLE OR IN PART AS THE BASIS FOR THE MANUFACTURE OR SALE OF ITEMS WITHOUT WRITTEN PERMISSION.
COPYRIGHT 1984 DIGITAL EQUIPMENT CORPORATION

REVISION HISTORY		
REV	ECO NUMBER	DATE
A	M7606-M0021	[illegible]

DRAWING
TITLE=KDQ32
LAST<MODIFIED=Sun Oct 7 20:49:41 1984

digital

DRN: BARRY MASKAS	DATE 3-OCT-84	ENG: BARRY MASKAS	DATE 3-OCT-84
CHK'D: BARRY MASKAS	DATE 3-OCT-84	SHEET 1 OF 1	
		NEXT HIGHER ASSEMBLY:	

TITLE: Decoupling Capacitors

SIZE	CODE	NUMBER	REV
D	CS	M7505 -2 --5	B

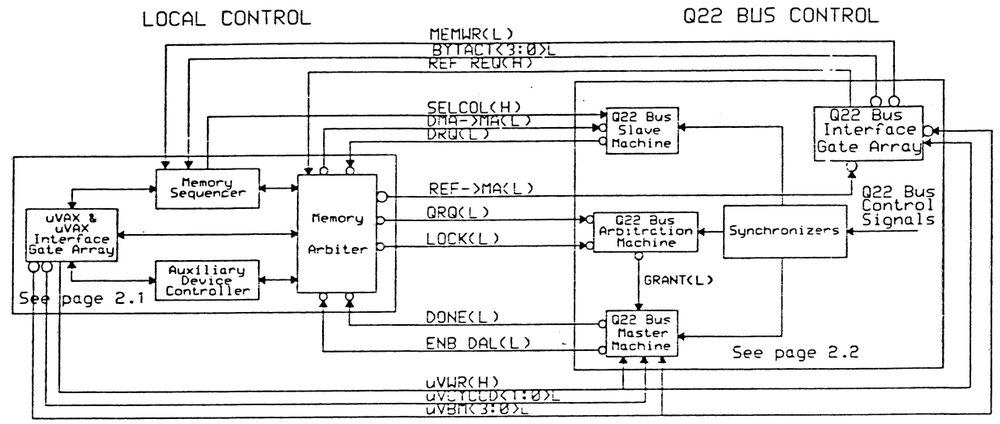

"THIS DRAWING AND SPECIFICATIONS, HEREIN, ARE THE PROPERTY OF DIGITAL EQUIPMENT CORPORATION AND SHALL NOT BE REPRODUCED OR COPIED OR USED IN WHOLE OR IN PART AS THE BASIS FOR THE MANUFACTURE OR SALE OF ITEMS WITHOUT WRITTEN PERMISSION.
COPYRIGHT 1984 DIGITAL EQUIPMENT CORPORATION

REVISION HISTORY		
REV	ECO NUMBER	DATE
0	[illegible]	[illegible]

DRAWING
TITLE=CTLBLOCK
ABBREV=ctl
CIRCUIT←TYPE=CONTROL
LAST←MODIFIED=Mon Oct 29 09:44:18 1984

digital

DRN: BARRY MASKAS	DATE 8-DEC-83	ENG: BARRY MASKAS	DATE 8-DEC-83
CHK'D: R. MCNAMARA	DATE 8-DEC-83	SHEET 1 OF 1	
		NEXT HIGHER ASSEMBLY:	

TITLE: KA630 State Machines

SIZE	CODE	NUMBER	REV
D	CS	M7636 -2 -46	B

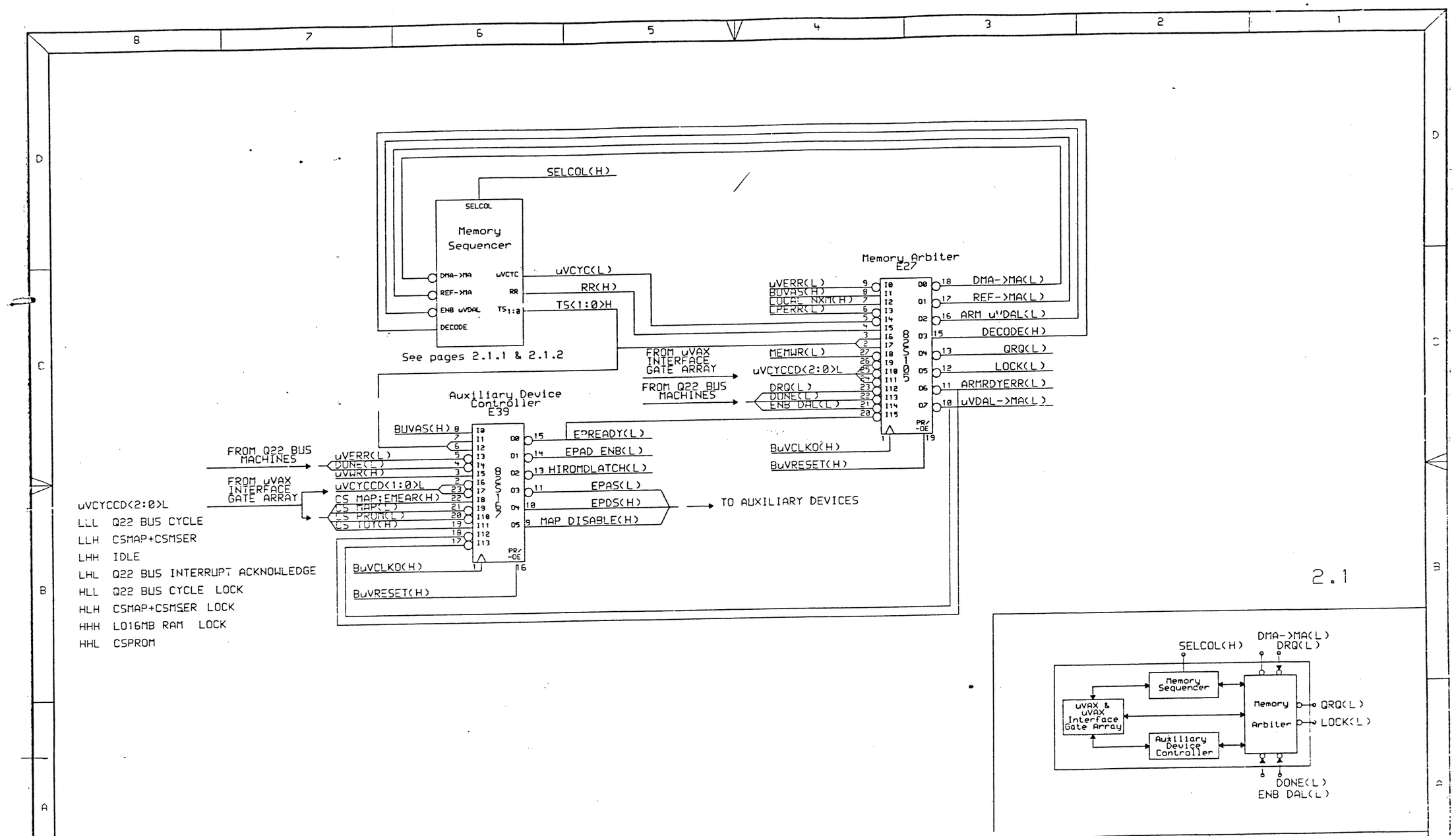

"THIS DRAWING AND SPECIFICATIONS, HEREIN, ARE THE PROPERTY OF DIGITAL EQUIPMENT CORPORATION AND SHALL NOT BE REPRODUCED OR COPIED OR USED IN WHOLE OR IN PART AS THE BASIS FOR THE MANUFACTURE OR SALE OF ITEMS WITHOUT WRITTEN PERMISSION.
COPYRIGHT 1984 DIGITAL EQUIPMENT CORPORATION

REVISION HISTORY

REV	ECO NUMBER	DATE
B	M7506-ALO01	[illegible]

DRAWING
TITLE=UVAX MACHINE
ABBREV=uVMach
CIRCUIT←TYPE=control
LAST←MODIFIED=Sun Oct 7 18:51:31 1984

DEFINE
X←FIRST=0
X←STEP=SIZE

digital

DRN:	DATE	ENG:	DATE	TITLE:
BARRY MASKAS	3-OCT-84	BARRY MASKAS	3-OCT-84	uVAX Cycle Controller
CHK'D: BARRY MASKAS	DATE 3-OCT-84	SHEET 1 OF 1		
		NEXT HIGHER ASSEMBLY:		

SIZE	CODE	NUMBER	REV
D	CS	M7506 -0 -47	B

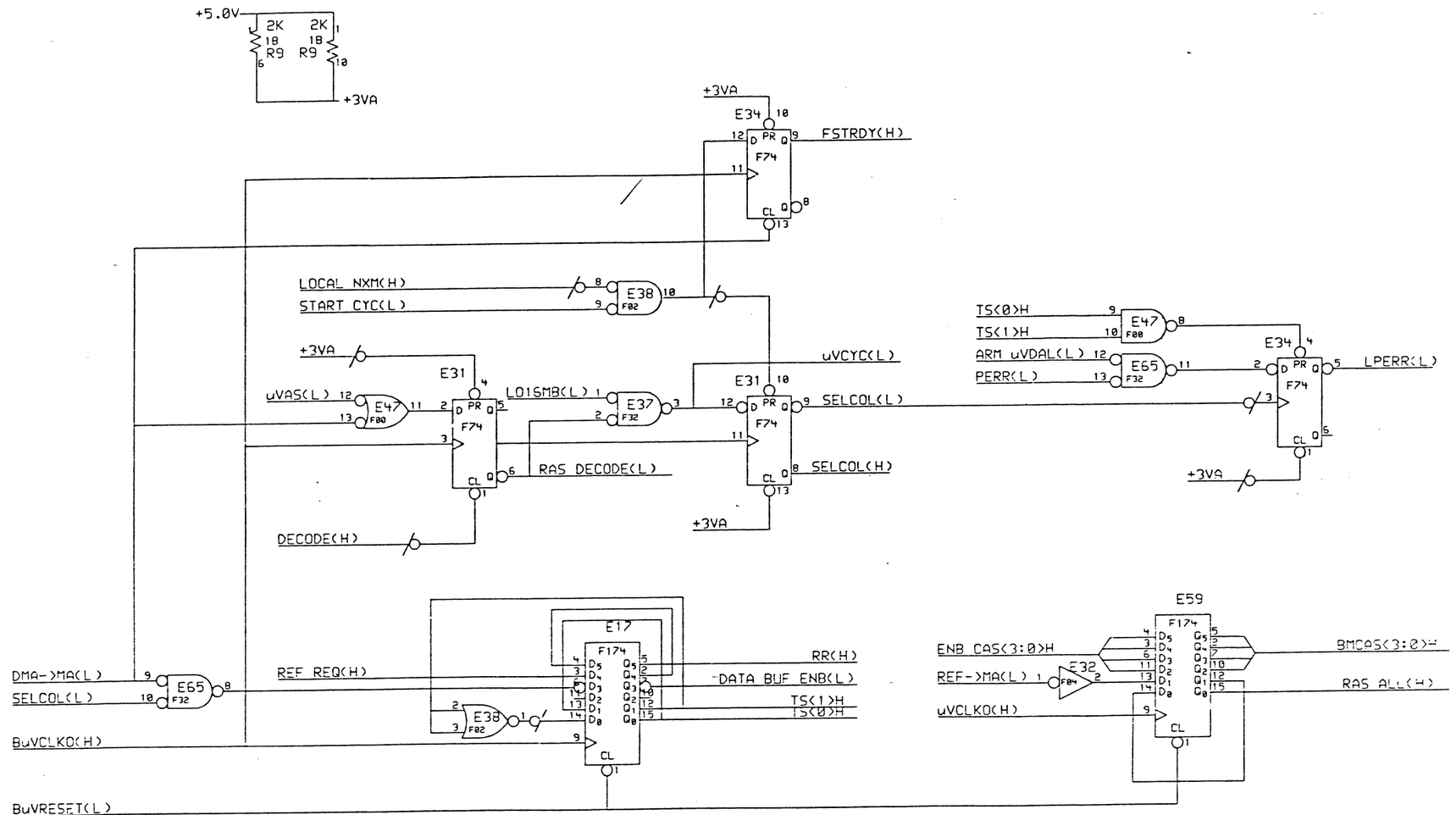

TS(1:0) STATE TABLE (uVAX Microcycle Counter)

	s	ns	
T4	00	01	first uVAX CLKO after /BuVRESET
T1	01	11	
T2	11	10	
T3	10	00	

"THIS DRAWING AND SPECIFICATIONS, HEREIN, ARE THE PROPERTY OF DIGITAL EQUIPMENT CORPORATION AND SHALL NOT BE REPRODUCED OR COPIED OR USED IN WHOLE OR IN PART AS THE BASIS FOR THE MANUFACTURE OR SALE OF ITEMS WITHOUT WRITTEN PERMISSION.
COPYRIGHT 1984 DIGITAL EQUIPMENT CORPORATION

REVISION HISTORY		
REV	ECO NUMBER	DATE
B	M7605-M0010	

DRAWING
TITLE=MEM CTRLR
ABBREV=MEMCTRL
CIRCUIT←TYPE=MEM←CTRL
LAST←MODIFIED=Fri Oct 12 14:23:21 1984

digital

DRN: BARRY MASKAS	DATE 18-DEC-83	ENG: BARRY MASKAS	DATE 18-DEC-83	TITLE: MEMORY SEQUENCER
CHK'D: BARRY MASKAS	DATE 18-DEC-83	SHEET 1 OF		
		NEXT HIGHER ASSEMBLY:		SIZE D · CODE CS · NUMBER M7605-2-0-3 · REV B

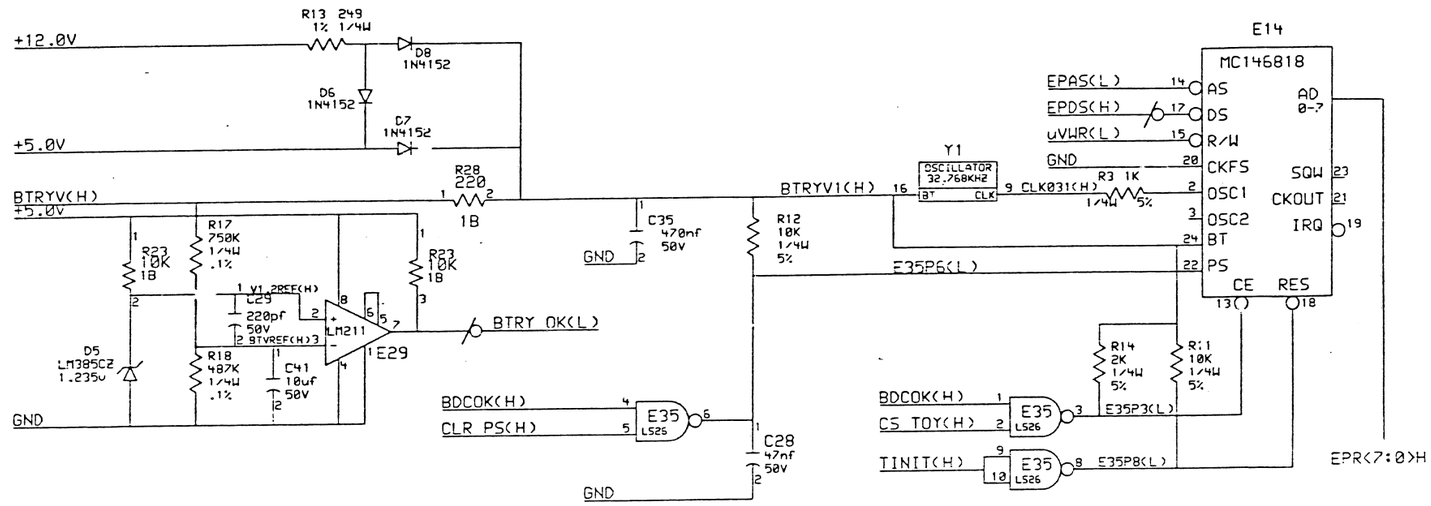

Battery Sense/Charge	
32.768KHz oscillator	TOY Clock

EPR(7:0)H

"THIS DRAWING AND SPECIFICATIONS, HEREIN, ARE THE PROPERTY OF DIGITAL EQUIPMENT CORPORATION AND SHALL NOT BE REPRODUCED OR COPIED OR USED IN WHOLE OR IN PART AS THE BASIS FOR THE MANUFACTURE OR SALE OF ITEMS WITHOUT WRITTEN PERMISSION.

COPYRIGHT 1984 DIGITAL EQUIPMENT CORPORATION

REVISION HISTORY		
REV	ECO NUMBER	DATE
D	M7106-ALC01	[illegible]

DRAWING
TITLE=TOY
ABBREV=TOY
CIRCUIT←TYPE=TOY/CLOCK
LAST←MODIFIED=Fri Oct 12 11:59:59 1984

DEFINE
X←FIRST=0
X←STEP=SIZE

digital

DRN: BARRY MASKAS	DATE 3-OCT-84	ENG: BARRY MASKAS	DATE 3-OCT-84
CHK'D: BARRY MASKAS	DATE 3-OCT-84	SHEET 1 OF 1	
		NEXT HIGHER ASSEMBLY:	

TITLE: TIME OF YEAR (TOY) Clock

SIZE	CODE	NUMBER	REV
D	CS	M7506 -0 -12	B

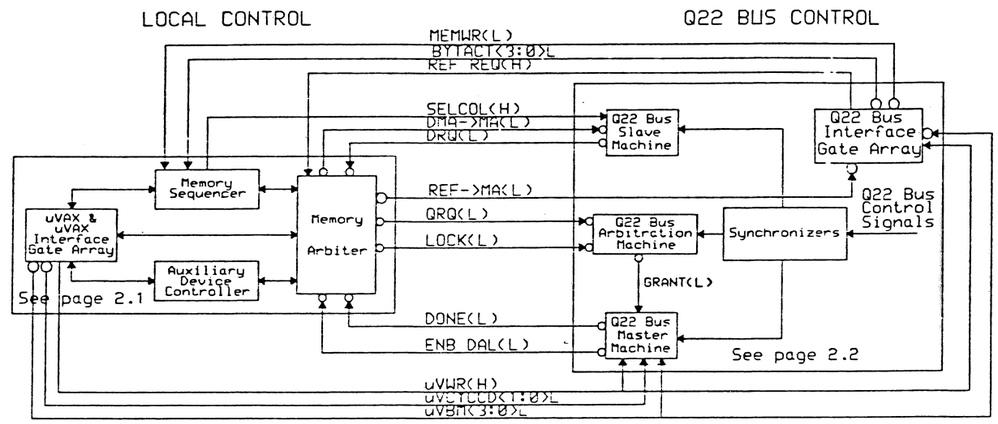

2

"THIS DRAWING AND SPECIFICATIONS, HEREIN, ARE THE PROPERTY OF DIGITAL EQUIPMENT CORPORATION AND SHALL NOT BE REPRODUCED OR COPIED OR USED IN WHOLE OR IN PART AS THE BASIS FOR THE MANUFACTURE OR SALE OF ITEMS WITHOUT WRITTEN PERMISSION.
COPYRIGHT 1984 DIGITAL EQUIPMENT CORPORATION

REVISION HISTORY		
REV	ECO NUMBER	DATE

DRAWING
TITLE=CTLBLOCK
ABBREV=ctl
CIRCUIT←TYPE=CONTROL
LAST←MODIFIED=Mon Oct 29 09:44:18 1984

digital

DRN: BARRY MASKAS	DATE 8-DEC-83	ENG: BARRY MASKAS	DATE 8-DEC-83
CHK'D: R. MCNAMARA	DATE 8-DEC-83	SHEET 1 OF 1	
		NEXT HIGHER ASSEMBLY:	

TITLE: KA630 State Machines

SIZE	CODE	NUMBER	REV
D	CS	M7636 -2 -+6	B

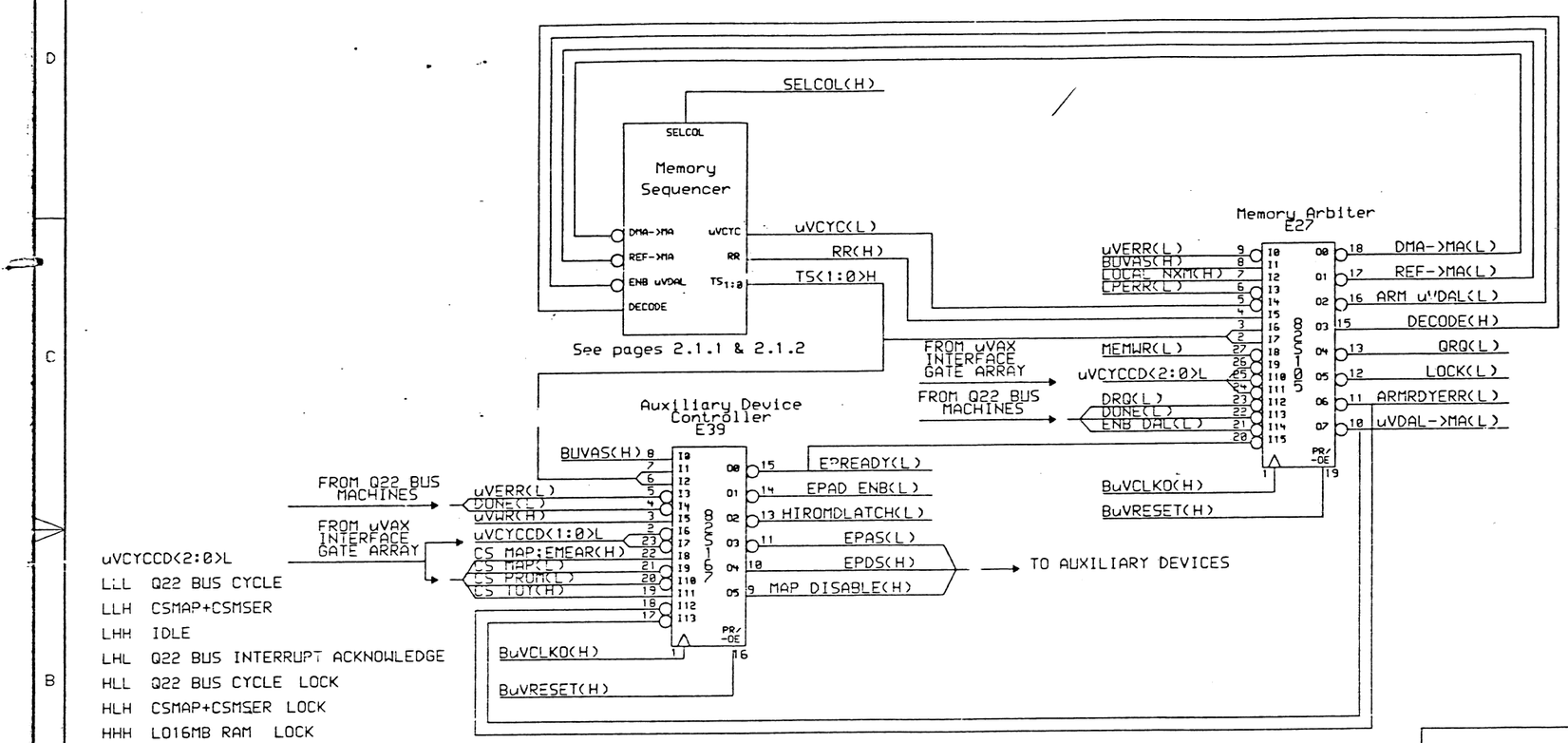

2.1

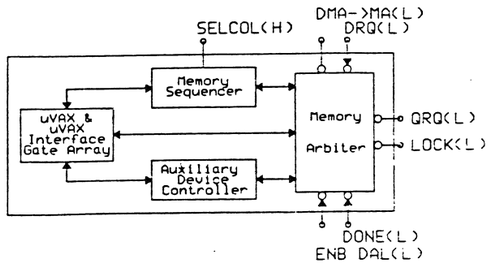

"THIS DRAWING AND SPECIFICATIONS, HEREIN, ARE THE PROPERTY OF DIGITAL EQUIPMENT CORPORATION AND SHALL NOT BE REPRODUCED OR COPIED OR USED IN WHOLE OR IN PART AS THE BASIS FOR THE MANUFACTURE OR SALE OF ITEMS WITHOUT WRITTEN PERMISSION.
COPYRIGHT 1984 DIGITAL EQUIPMENT CORPORATION

REVISION HISTORY		
REV	ECO NUMBER	DATE
B	M7606-ML001	28-JUL-89

DRAWING
TITLE=UVAX MACHINE
ABBREV=uVMach
CIRCUIT←TYPE=control
LAST←MODIFIED=Sun Oct 7 18:51:31 1984

DEFINE
X←FIRST=0
X←STEP=SIZE

digital

DRN: BARRY MASKAS	DATE 3-OCT-84	ENG: BARRY MASKAS	DATE 3-OCT-84
CHK'D: BARRY MASKAS	DATE 3-OCT-84	SHEET 1 OF 1	
		NEXT HIGHER ASSEMBLY:	

TITLE: uVAX Cycle Controller

SIZE	CODE	NUMBER	REV
D	CS	M7506 -0 -47	E

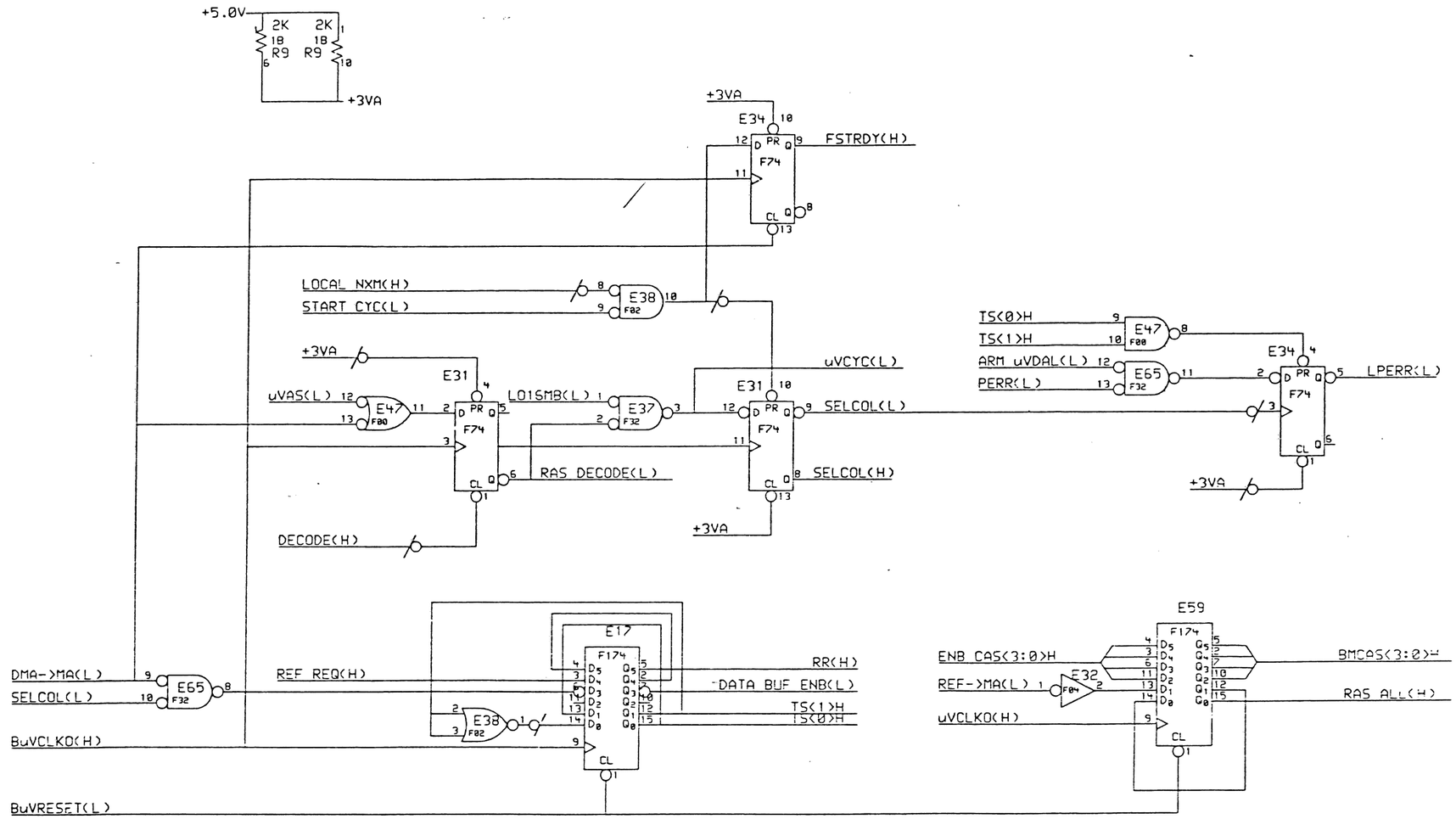

TS<1:0> STATE TABLE (uVAX Microcycle Counter)

	s	ns	
T4	00	01	first uVAX CLKO after /BuVRESET
T1	01	11	
T2	11	10	
T3	10	00	

"THIS DRAWING AND SPECIFICATIONS, HEREIN, ARE THE PROPERTY OF DIGITAL EQUIPMENT CORPORATION AND SHALL NOT BE REPRODUCED OR COPIED OR USED IN WHOLE OR IN PART AS THE BASIS FOR THE MANUFACTURE OR SALE OF ITEMS WITHOUT WRITTEN PERMISSION.
COPYRIGHT 1984 DIGITAL EQUIPMENT CORPORATION

REVISION HISTORY		
REV	ECO NUMBER	DATE
B	M7605-MOD1	[illegible]

DRAWING
TITLE=MEM CTRLR
ABBREV=MEMCTRL
CIRCUIT←TYPE=MEM←CTRL
LAST←MODIFIED=Fri Oct 12 14:23:21 1984

digital

DRN: BARRY MASKAS	DATE 18-DEC-83	ENG: BARRY MASKAS	DATE 18-DEC-83
CHK'D: BARRY MASKAS	DATE 18-DEC-83	SHEET 1 OF 1	
		NEXT HIGHER ASSEMBLY:	

TITLE: MEMORY SEQUENCER

SIZE	CODE	NUMBER	REV
D	C5	M7605 -2 -0	B

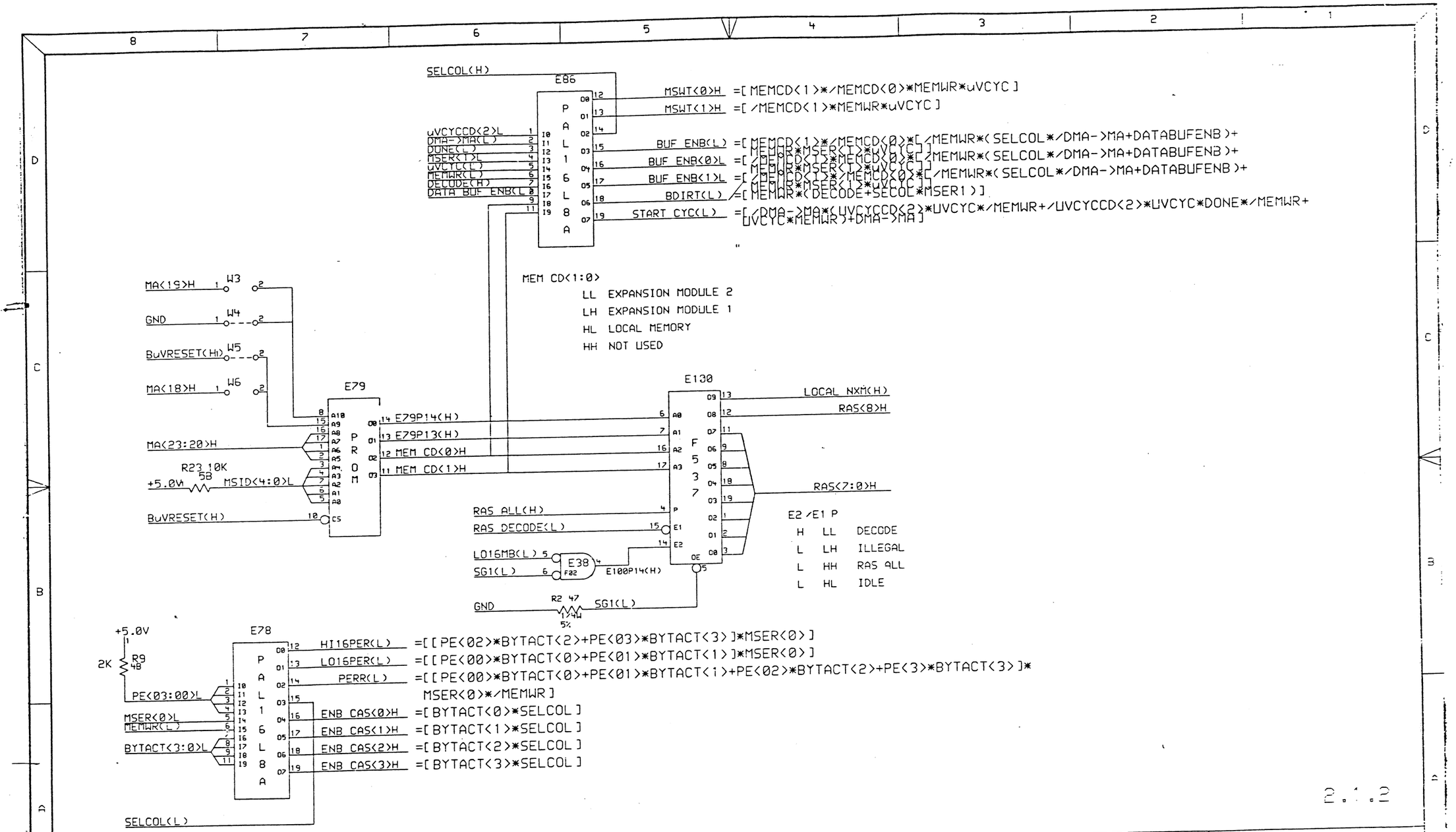

"THIS DRAWING AND SPECIFICATIONS, HEREIN, ARE THE PROPERTY OF DIGITAL EQUIPMENT CORPORATION AND SHALL NOT BE REPRODUCED OR COPIED OR USED IN WHOLE OR IN PART AS THE BASIS FOR THE MANUFACTURE OR SALE OF ITEMS WITHOUT WRITTEN PERMISSION.
COPYRIGHT 1984 DIGITAL EQUIPMENT CORPORATION

REVISION HISTORY		
REV	ECO NUMBER	DATE
B	M7506 MICO	14-MAY-85

DRAWING
TITLE=MEM CTRLR
ABBREV=MEM←CTRLR
CIRCUIT←TYPE=MEM←DECODE
LAST←MODIFIED=Fri Oct 12 14:19:03 1984

DEFINE
X←FIRST=0
X←STEP=SIZE

digital

DRN: BARRY MASKAS	DATE 3-OCT-84	ENG: BARRY MASKAS	DATE 3-OCT-84
CHK'D: BARRY MASKAS	DATE 3-OCT-84	SHEET 1 OF 1	
		NEXT HIGHER ASSEMBLY:	

TITLE: MEMORY SEQUENCER SUPPORT

SIZE	CODE	NUMBER	REV
D	CS	M7506 -0 -49.	B

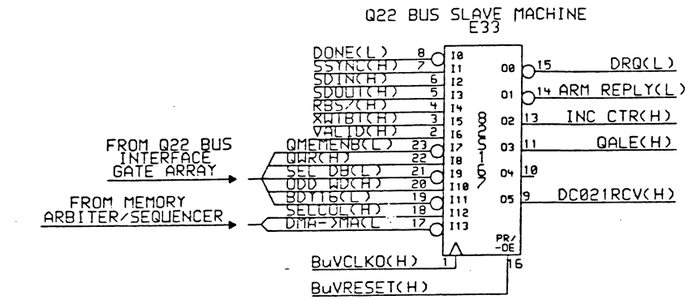

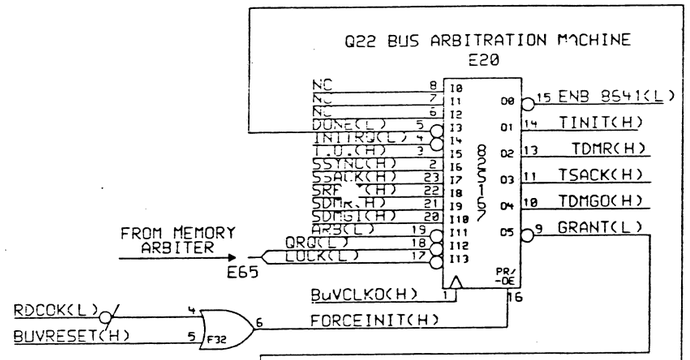

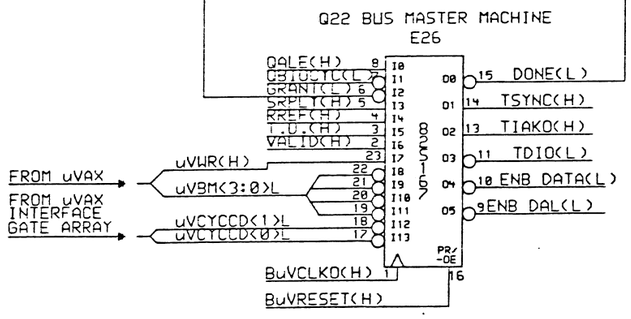

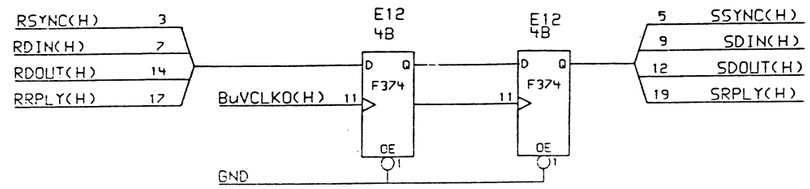

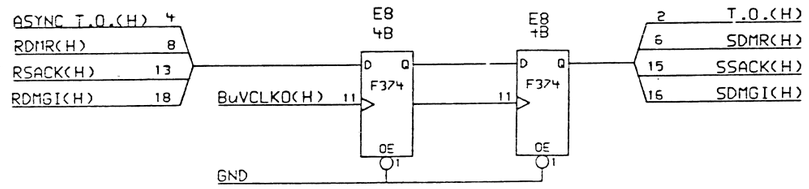

2.2

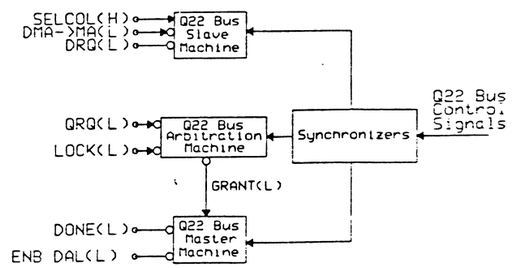

"THIS DRAWING AND SPECIFICATIONS, HEREIN, ARE THE PROPERTY OF DIGITAL EQUIPMENT CORPORATION AND SHALL NOT BE REPRODUCED OR COPIED OR USED IN WHOLE OR IN PART AS THE BASIS FOR THE MANUFACTURE OR SALE OF ITEMS WITHOUT WRITTEN PERMISSION.
COPYRIGHT 1984 DIGITAL EQUIPMENT CORPORATION

REVISION HISTORY		
REV	ECO NUMBER	DATE
B	[illegible]	[illegible]

DRAWING
TITLE=QBUS MACHINE
ABBREV=QCTRL
CIRCUIT←TYPE=QBUS←CNTRL
LAST←MODIFIED=Fri Oct 12 12:21:22 1984

DEFINE
X←FORST=0
X←STEP=SIZE

digital

DRN: R. McNamara	DATE 3-OCT-84	ENG: R. McNamara	DATE 3-OCT-84
CHK'D: R. McNamara	DATE 3-OCT-84	SHEET 1 OF 1	
		NEXT HIGHER ASSEMBLY:	

TITLE: Q22 BUS STATE MACHINES

SIZE	CODE	NUMBER	REV
D	CS	M7505 -0 -50	B

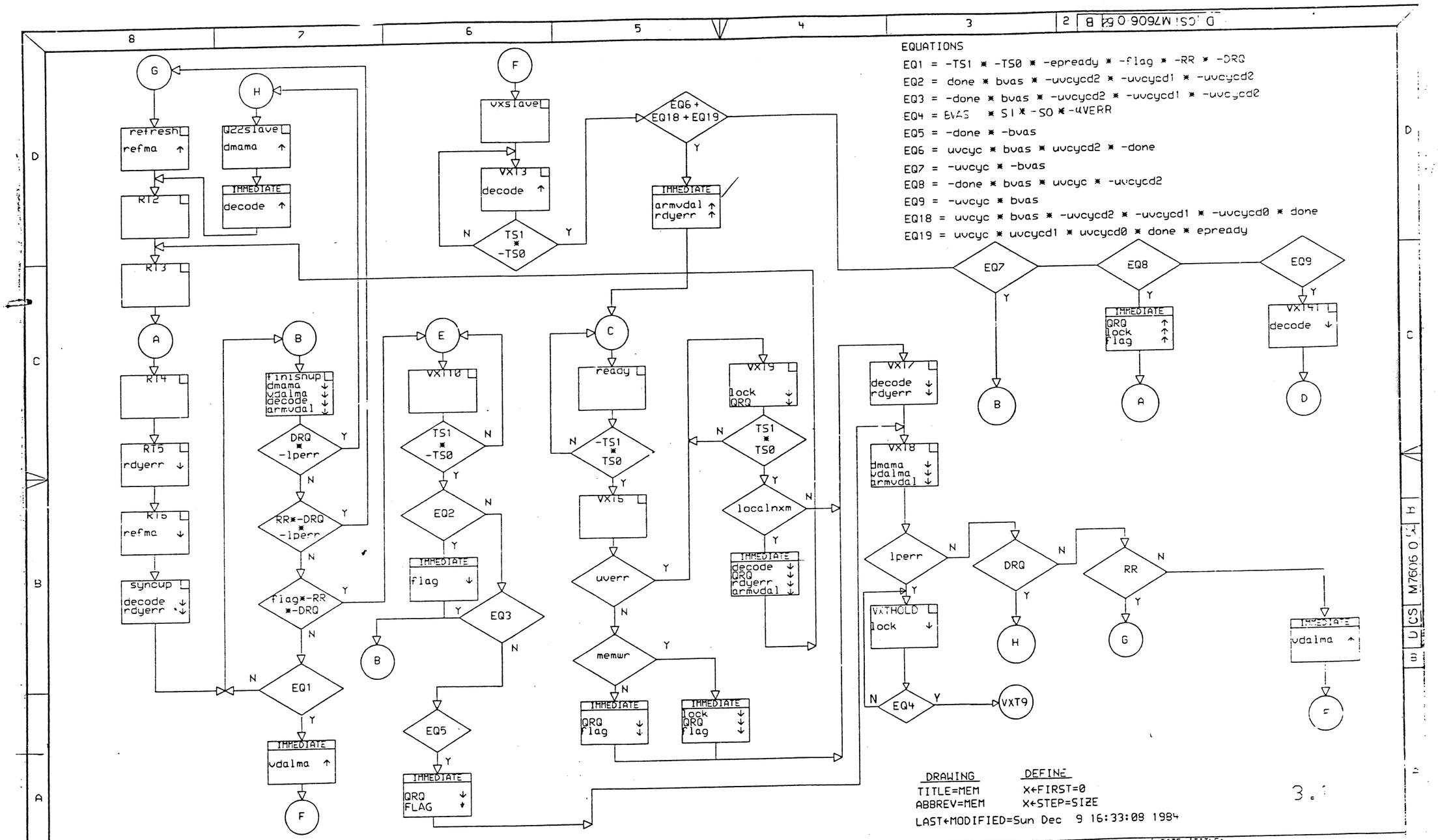

THIS DRAWING AND SPECIFICATIONS, DESIGN, BOTH THE PROPERTY OF DIGITAL EQUIPMENT CORPORATION AND SHALL NOT BE REPRODUCED OR COPIED OR USED IN WHOLE OR IN PART AS THE BASIS FOR MANUFACTURE OR SALE OF ITEMS WITHOUT WRITTEN PERMISSION. COPYRIGHT © 1984 DIGITAL EQUIPMENT CORPORATION

REVISION		
CHK	CHANGE NO	REV
	M7606-ALG01	A

digital

DRN. BARRY MASKAS
CHK'D. BARRY MASKAS
DATE
EXD. BARRY MASKAS
DATE
BOARD LOCATION:
SHEET 1 OF 2
TOP DOCUMENT NUMBER:
USRA:
FIRST USED ON OPTION/MODEL:

TITLE: KA630 MEMORY SYSTEM ARBITER STATE FLOW DIAGRAMS

SIZE D | CODE CS | NUMBER M7505 -0 -52 | REV.

D CS M7606 0 B 2

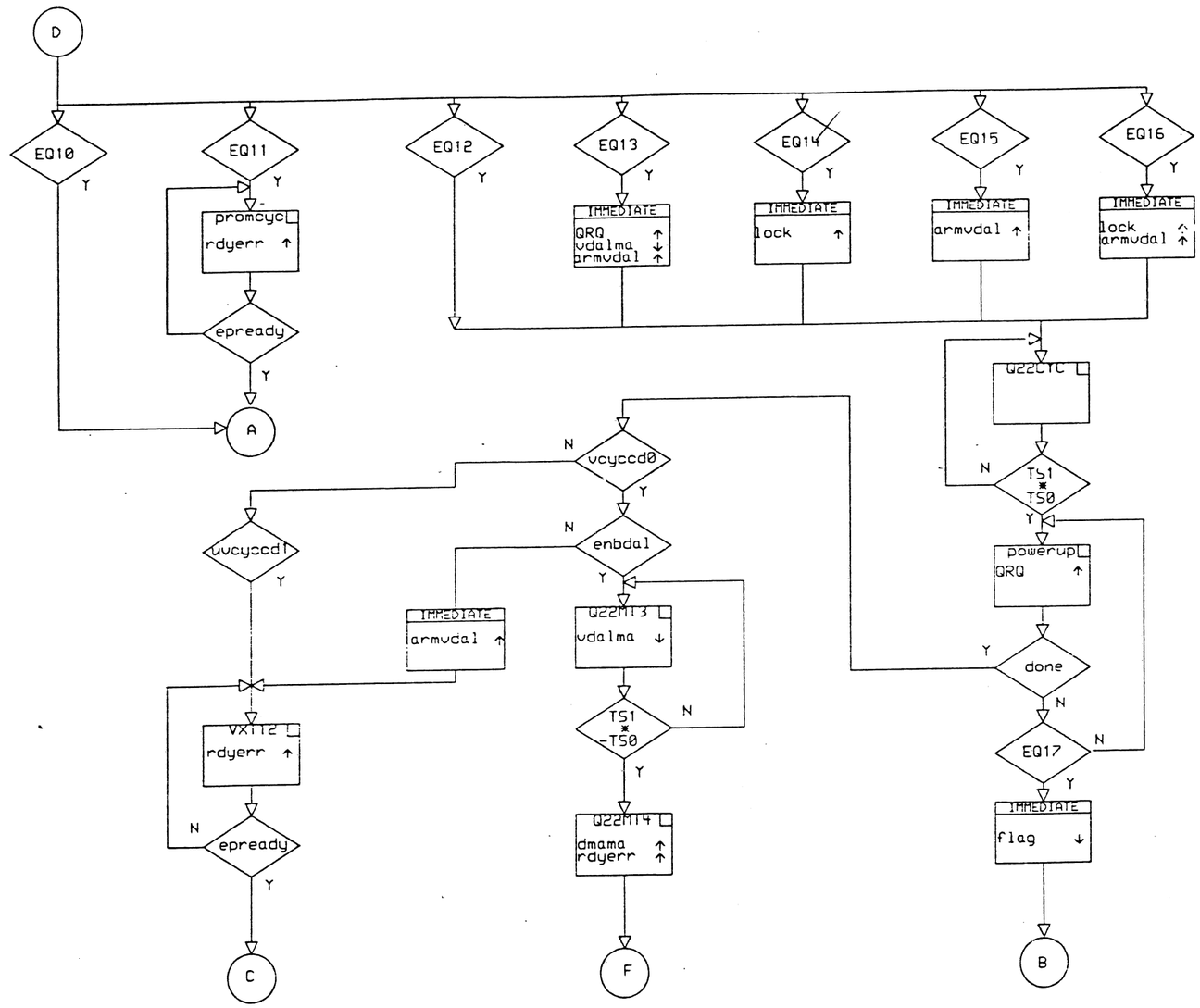

EQUATIONS

EQ10 = -uvcyc * -uvcycd1 * -uvcycd0

EQ11 = -uvcyc * -uvcycd2 * -uvcycd1 * uvcycd0

EQ12 = -uvcyc * uvcycd2 * uvcycd1 * -uvcycd0

EQ13 = -uvcyc * uvcycd2 * -uvcycd1 * uvcycd0

EQ14 = -uvcyc * -uvcycd2 * uvcycd1 * -uvcycd0

EQ15 = -uvcyc * uvcycd2 * uvcycd1 * uvcycd0

EQ16 = -uvcyc * -uvcycd2 * uvcycd1 * uvcycd0

EQ17 = DRQ + TS1 * -TS0 * RR

3.2

DRAWING

NAME=MEM
ABBREV=MEM
LAST+MODIFIED=Sun Dec 9 16:40:59 1984

THIS DRAWING AND SPECIFICATIONS, CONTAINS PROPRIETARY INFORMATION OF DIGITAL EQUIPMENT CORPORATION AND SHALL NOT BE REPRODUCED OR COPIED OR USED IN WHOLE OR IN PART AS A BASIS FOR MANUFACTURE OR SALE BY ANYONE OTHER THAN DIGITAL EQUIPMENT CORPORATION. COPYRIGHT © 1984 DIGITAL EQUIPMENT CORPORATION

REVISION		
CHK	CHANGE NO	REV
	M7606-MU01	A

digital

DRN BARRY MASKAS DATE
CHK'D BARRY MASKAS DATE
ENG BARRY MASKAS DATE
BOARD LOCATION:
SHEET 2 OF 2
TOP DOCUMENT NUMBER:
USRA:
FIRST USED ON OPTION/MODEL:

TITLE: KA630 MEMORY SYSTEM ARBITER STATE FLOW DIAGRAMS

SIZE D | CODE CS | NUMBER M7606-0-53 | REV 3

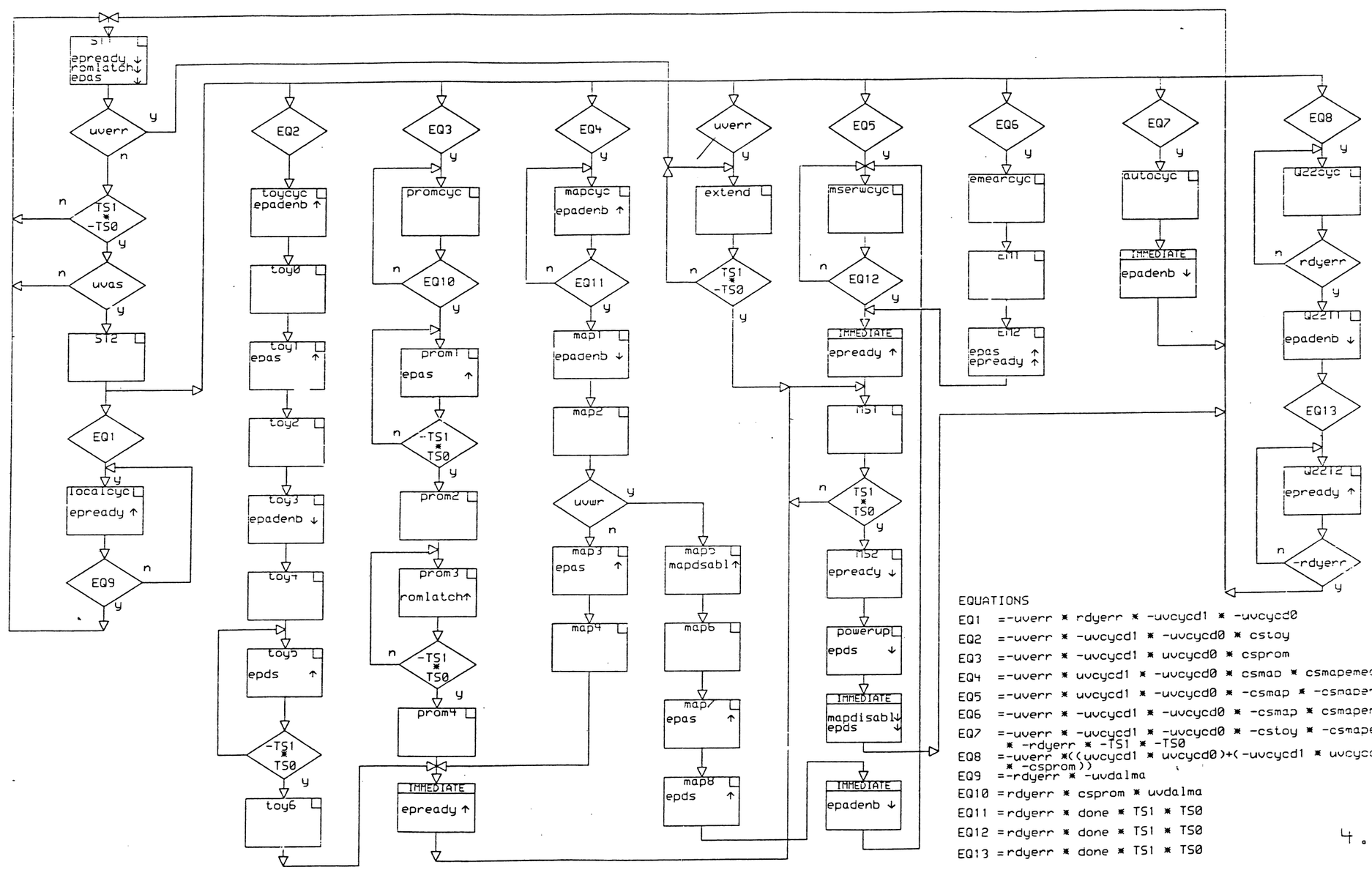

EQUATIONS

EQ1 =-uverr * rdyerr * -uvcycd1 * -uvcycd0

EQ2 =-uverr * -uvcycd1 * -uvcycd0 * cstoy

EQ3 =-uverr * -uvcycd1 * uvcycd0 * csprom

EQ4 =-uverr * uvcycd1 * -uvcycd0 * csmap * csmapemear

EQ5 =-uverr * uvcycd1 * -uvcycd0 * -csmap * -csmapemear

EQ6 =-uverr * -uvcycd1 * -uvcycd0 * -csmap * csmapemear

EQ7 =-uverr * -uvcycd1 * -uvcycd0 * -cstoy * -csmapemear
* -rdyerr * -TS1 * -TS0

EQ8 =-uverr *((uvcycd1 * uvcycd0)+(-uvcycd1 * uvcycd0
* -csprom))

EQ9 =-rdyerr * -uvdalma

EQ10 =rdyerr * csprom * uvdalma

EQ11 =rdyerr * done * TS1 * TS0

EQ12 =rdyerr * done * TS1 * TS0

EQ13 =rdyerr * done * TS1 * TS0

4.1

"THIS DRAWING AND SPECIFICATIONS, HEREIN, ARE THE PROPERTY OF DIGITAL EQUIPMENT CORPORATION AND SHALL NOT BE REPRODUCED OR COPIED OR USED IN WHOLE OR IN PART AS THE BASIS FOR THE MANUFACTURE OR SALE OF ITEMS WITHOUT WRITTEN PERMISSION.

COPYRIGHT 1984 DIGITAL EQUIPMENT CORPORATION

REVISION HISTORY		
REV	ECO NUMBER	DATE
G	M7606-M001	[illegible]

DRAWING

TITLE=EPR
ABBREV=EPR

DEFINE

X←FIRST=0
X←STEP=SIZE

LAST←MODIFIED=Mon Oct 22 15:14:12 1984

digital

DRN: BARRY MASKAS	DATE 28-AUG-1984	ENG: BARRY MASKAS	DATE 28-AUG-1984
CHK'D: BARRY MASKAS	DATE 28-AUG-1984	SHEET 1 OF 1	
		NEXT HIGHER ASSEMBLY:	

TITLE: KA630 LOCAL I/O BUS CONTROL STATE MACHINE

SIZE	CODE	NUMBER	REV
D	CS	M7606 -0 -35	E

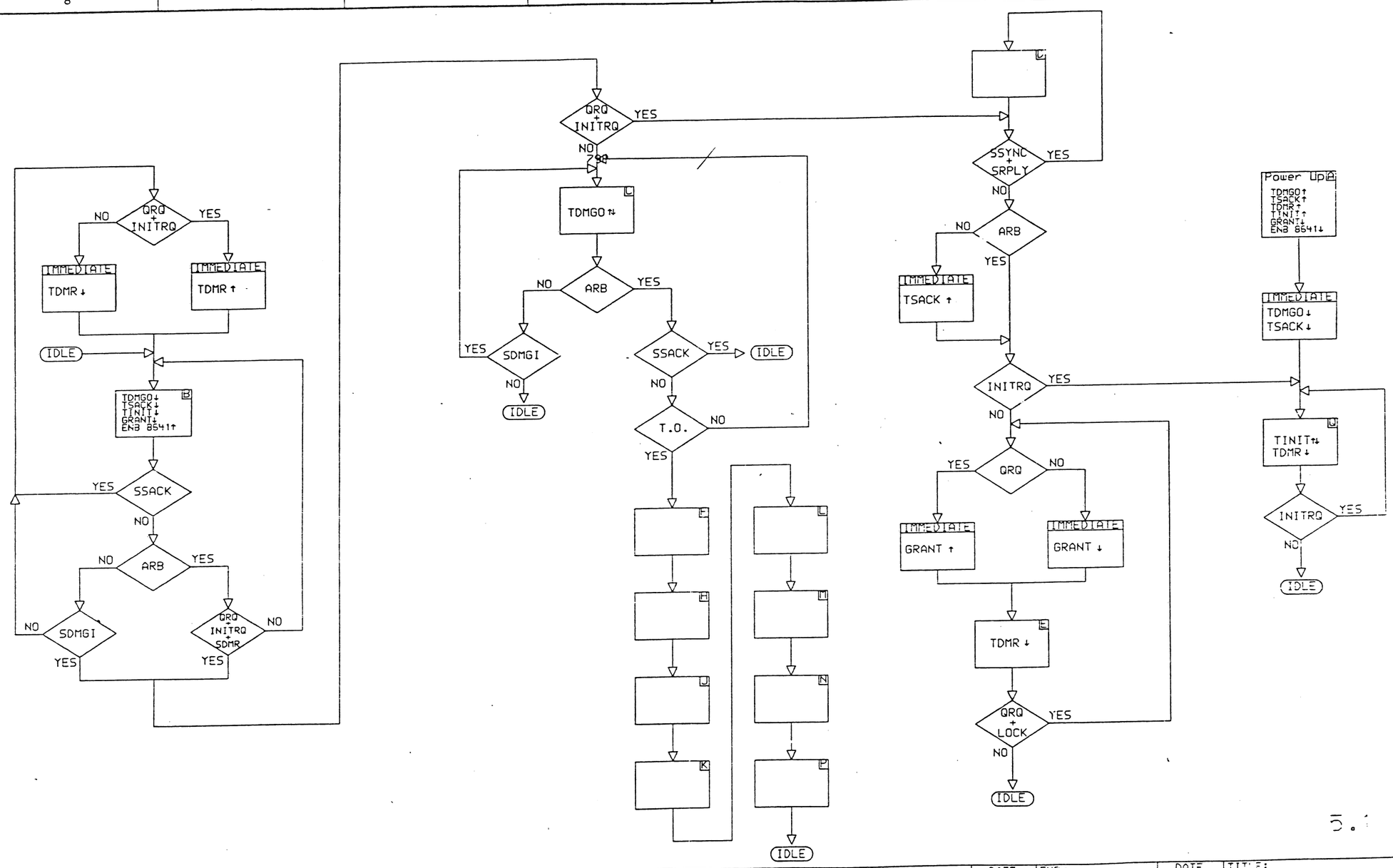

"THIS DRAWING AND SPECIFICATIONS, HEREIN, ARE THE PROPERTY OF DIGITAL EQUIPMENT CORPORATION AND SHALL NOT BE REPRODUCED OR COPIED OR USED IN WHOLE OR IN PART AS THE BASIS FOR THE MANUFACTURE OR SALE OF ITEMS WITHOUT WRITTEN PERMISSION.
COPYRIGHT 1984 DIGITAL EQUIPMENT CORPORATION

REVISION HISTORY		
REV	ECO NUMBER	DATE

DRAWING
TITLE=ARB
ABBREV=arb
LAST←MODIFIED=Mon Oct 22 15:04:38 1984

DEFINE
X←FIRST=0
X←STEP=SIZE

digital

DRN: R. McNamara	DATE 6-Jul-84	ENG: R. McNamara	DATE 6-Jul-84
CHK'D: R. McNamara	DATE 6-Jul-84	SHEET 1 OF 1	
		NEXT HIGHER ASSEMBLY:	

TITLE: QBUS ARBITRATION CONTROLLER
DETAILED CONTROL FLOW DIAGRAM

SIZE	CODE	NUMBER	REV
D	CS	M7526 -0 -57	D

"THIS DRAWING AND SPECIFICATIONS, HEREIN, ARE THE PROPERTY OF DIGITAL EQUIPMENT CORPORATION AND SHALL NOT BE REPRODUCED OR COPIED OR USED IN WHOLE OR IN PART AS THE BASIS FOR THE MANUFACTURE OR SALE OF ITEMS WITHOUT WRITTEN PERMISSION
COPYRIGHT © 1984 DIGITAL EQUIPMENT CORPORATION"

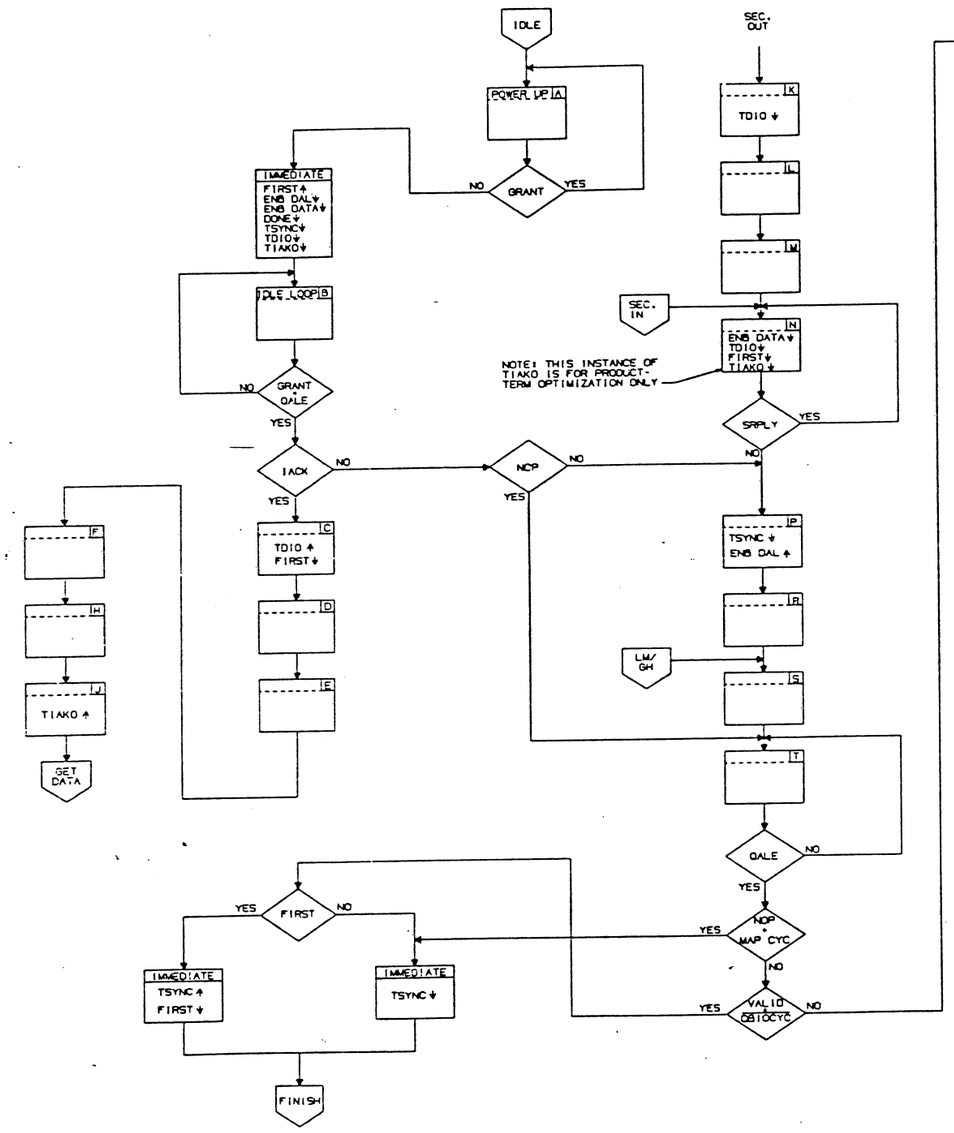

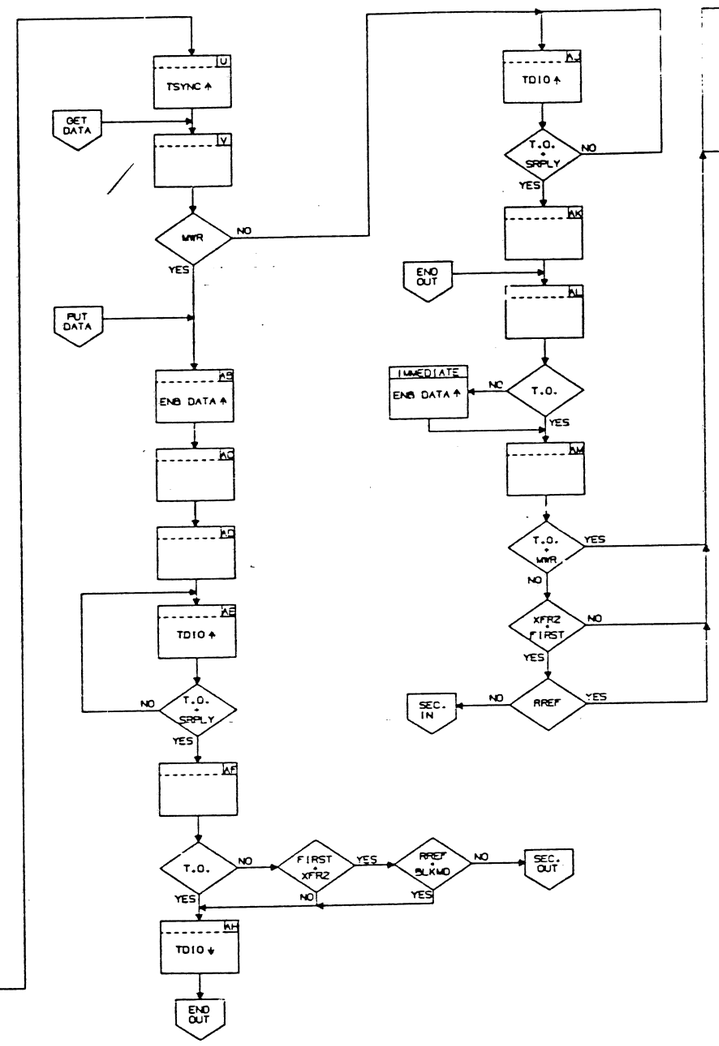

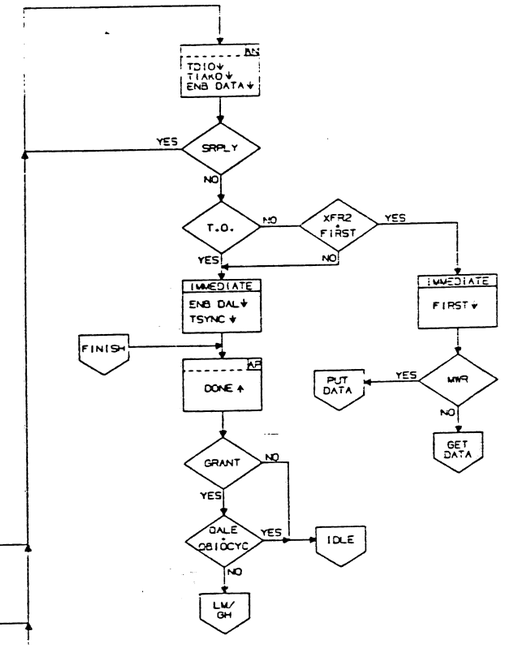

REVISION HISTORY		
DATE	ECO NUMBER	REV
[illegible]	[illegible]	A

TITLE: Q22 BUS MASTER CONTROL MACHINE FLOW DIAGRAM

DOCUMENT NUMBER			
SIZE	CODE	NUMBER	REV
D	CS	M7606-0-59	B

SCALE: — SHEET 1 OF

"THIS DRAWING AND SPECIFICATIONS, HEREIN, ARE THE PROPERTY OF DIGITAL EQUIPMENT CORPORATION AND SHALL NOT BE REPRODUCED OR COPIED OR USED IN WHOLE OR IN PART AS THE BASIS FOR THE MANUFACTURE OR SALE OF ITEMS WITHOUT WRITTEN PERMISSION. COPYRIGHT © 1984 DIGITAL EQUIPMENT CORPORATION"

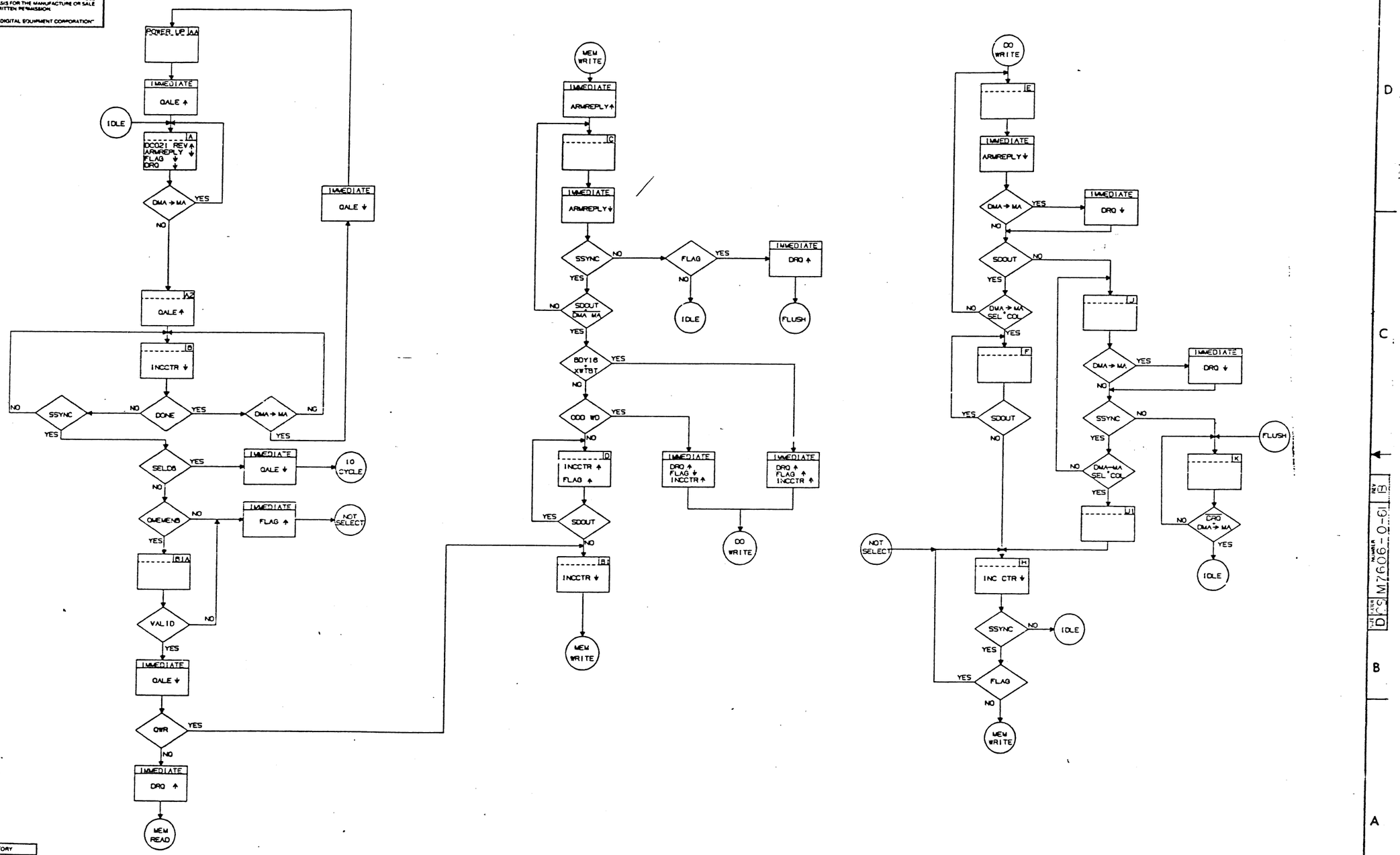

REVISION HISTORY		
DATE	ECO NUMBER	REV
		7

DPD136A

TITLE: Q22 BUS SLAVE CONTROL MACHINE FLOW DIAGRAM

DOCUMENT NUMBER			
SIZE	CODE	NUMBER	REV
D	CS	M7606-0-81	F
SCALE 1/1		SHEET 1 OF 1	

"THIS DRAWING AND SPECIFICATIONS, HEREIN, ARE THE PROPERTY OF DIGITAL EQUIPMENT CORPORATION AND SHALL NOT BE REPRODUCED OR COPIED OR USED IN WHOLE OR IN PART AS THE BASIS FOR THE MANUFACTURE OR SALE OF ITEMS WITHOUT WRITTEN PERMISSION.
COPYRIGHT © 1984 DIGITAL EQUIPMENT CORPORATION"

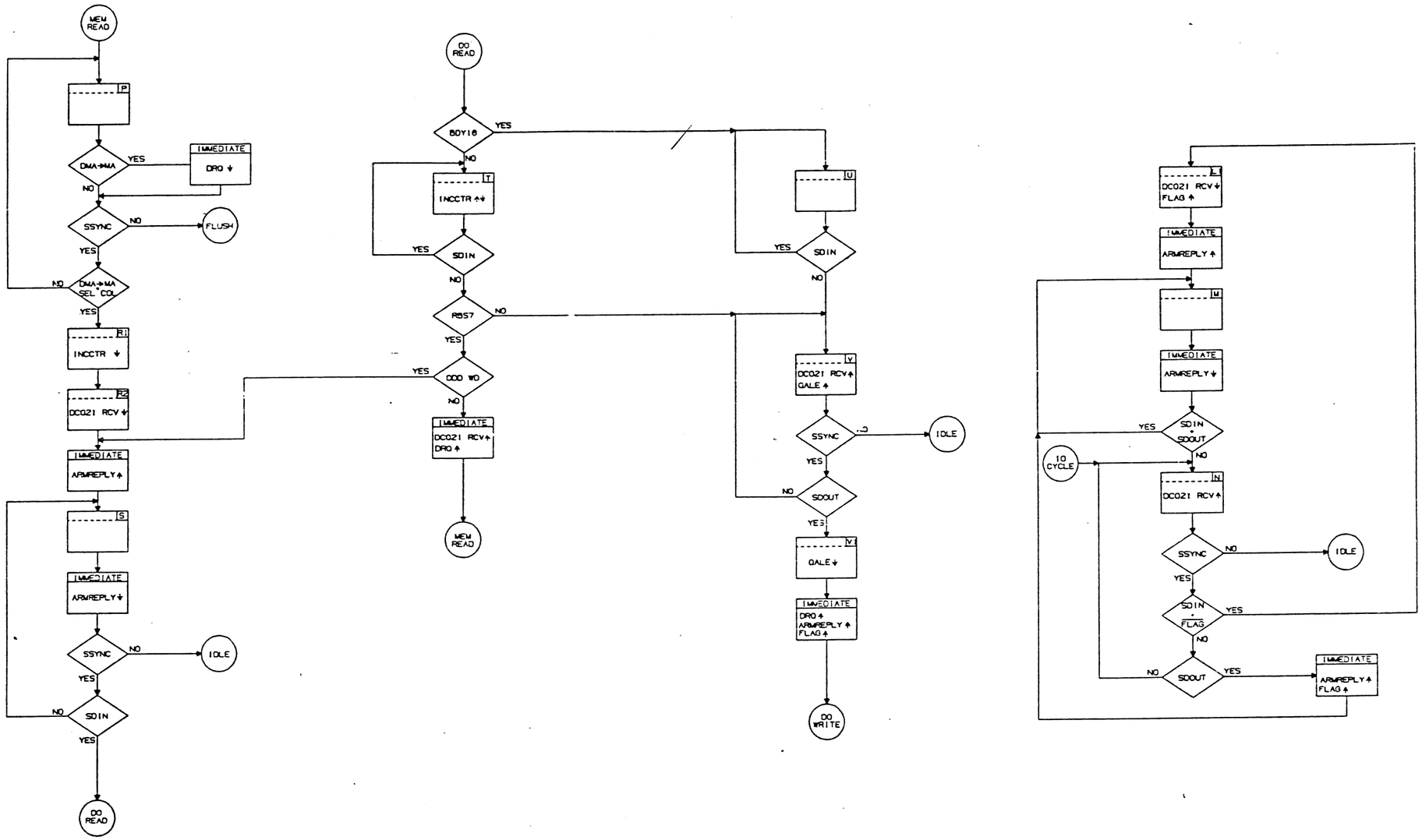

REVISION HISTORY		
DATE	ECO NUMBER	REV.

TITLE
Q22 BUS SLAVE CONTROL
MACHINE FLOW DIAGRAM

DOCUMENT NUMBER			
SIZE	CODE	NUMBER	REV
D	CS	M7606-0-62	B
SCALE		SHEET 1 OF 1	

DPD 136A